AC/DC Converter

PDM-05-xx(M)-y Series

CE EN62368-1

RoHS Reach

3years warranty

Features

- **Ultra-wide 85 - 305VAC and 100 - 430VDC input voltage range**
- **Operating ambient temperature range: -40℃ to +85℃**
- **High I/O isolation test voltage up to 4000VAC**
- **No-load power consumption as low as 0.1W**
- **EMI performance meets CISPR32/EN55032 CLASS B, EN55014**
- **5000m altitude application**
- **Panel mounting and DIN Rail mounting option**

Selection Guide

TYPE	Output			Efficiency (%) Typ. at 230Vac	Capacity Load (µF) Max.
	POWER (W)	Voltage (VDC)	Current (mA)		
PDM-05-03M	4.95	3.3	1500	71.5	4000
PDM-05-05M	5	5	1000	77.5	3000
PDM-05-09M	5.04	9	560	80.5	1200
PDM-05-12M	5.04	12	420	80.5	1200
PDM-05-15M	4.95	15	330	81.5	680
PDM-05-24M	5.52	24	230	81.5	220
PDM-05-03-y	5	3.3	1515	71.5	4000
PDM-05-05-y	5	5	1000	77.5	3000
PDM-05-09-y	5	9	555	80.5	1200
PDM-05-12-y	5	12	416	80.5	1200
PDM-05-15-y	5	15	333	81.5	680
PDM-05-24-y	5	24	208	81.5	220

Note: y = P – panel mounting option, y = D – din rail mounting option.

MPL POWER ELEKTRO sp. z o.o., All rights reserved

sales@prom-elec.com / ООО ПРОМЭЛЕКТРОНИКА

PDM-05-xx(M)-y Series

Specifications

Characteristic	Item	Operating Conditions	Min.	Typ.	Max.	Unit
Input Specifications	Input Voltage Range	AC input	85		305	VAC
		DC input	100		430	VDC
	Input Frequency		47		63	HZ
	Input Current	115VAC			0.13	A
		230VAC			0.07	
	Inrush Current	115VAC		15		
		230VAC		25 (M version: 30)		
	Leakage Current	277VAC/50Hz			0.25mA RMS Max	
	Input Fuse			External, 1A, slow-blow, required, the actual use needs to be selected according to the application environment (M version: built in, 1A/300V, slow-blow)		
	Hot Plug				Unavailable	
Output Specifications	Voltage Accuracy	3.3V output	--	±3.0	--	%
		5/12/15/24V output	--	±2.0	--	
		M version	--	±2.0	--	
	Line Regulation	100% load	--	±0.5	--	
	Line Regulation (M version)	100% load	--	±0.3	±0.5	
	Load Regulation	0-100% load	--	±1.0	--	
	Load Regulation (M version)	0-100% load	--	±0.5	±1.0	
	Minimum Load		0	--	--	
	Ripple & Noise	20MHz bandwidth (peak to peak value)	--	50	100	mVp-p
	No-load Power Consumption	230Vac	--	0.1	--	W
	No-load Power Consumption (M version)	230Vac	--	0.1	0.15	
	Temperature Coefficient		--	±0.02	--	%/℃
	Hold Up Time	115Vac	--	5	--	ms
		230Vac		50		
	Hold Up Time (M version)	115Vac	--	18	--	
		230Vac		100		
	Short-circuit Protection			Hiccup, continuous, self-recovery		
	Over-current Protection			≥130%Io (M version: ≥120%Io), self-recovery		
	Over-voltage Protection	3.3/5.0V output			≤7.5VDC	
		9V output			≤15VDC	
		12V output			≤16VDC	
		15V output			≤20VDC	
		24V output			≤30VDC	
General Specifications	Operating Temperature		-40	--	+85	℃
	Storage Temperature		-40	--	+105	

MPL POWER ELEKTRO sp. z o.o., All rights reserved

PDM-05-xx(M)-y Series

	Isolation (Input-Output)	Electric Strength Test for 1min., leakage current <5mA	4000	--	--	Vac
	Insulation Resistance (M version, Input-Output)	Test voltage: 500VDC	100	--	--	MΩ
	Storage Humidity	Non-condensing	--	--	+95	%RH
	Switching Frequency		--	65	--	kHz
Mechanical Specification	Soldering Temperature	Wave-soldering	260 ± 5℃; time: 5 - 10s			
		Manual-welding	360 ± 10℃; time: 3 - 5s			
	Power Derating	-40℃ to -25℃	3	--	--	%/°C
		+50℃ to +70℃ (3.3V)	1.75	--	--	
		+55℃ to +70℃ (5/9/12V)	2.33	--	--	
		+60℃ to +70℃ (15/24V)	3.5			
		+70℃ to +85℃ (3.3V)	1.67	--	--	
		+70℃ to +85℃ (5/9/12/15/24V)	1	--	--	
		85VAC - 100VAC	1	--	--	%/Vac
		277VAC - 305VAC	0.54	--	--	
		2000m - 5000m	6.7	--	--	%/Km
	Power Derating (M version)	+50℃ to +70℃	1.75	--	--	%/°C
		+70℃ to +85℃	1.67	--	--	
		2000m - 5000m	0.67	--	--	%/Km
	Safety Class	CLASS II				
	MTBF	MIL-HDBK-217F@25°C	≥2 602kHrs (M version: ≥1080kHrs)			
	Designed Life	230VAC, Ta: 25°C 100% load	> 130 000Hrs			
		230VAC, Ta: 55°C 100% load	> 41 000hHrs			
	Case Material	Black plastic, flame-retardant and heat-resistant (UL94V-0)				
	Dimensions / Weight	Standard version	25.40 x 25.40 x 17.60 mm / 17.5g(typ.)			
		M version	45.70 x 25.40 x 21.50mm / 36g(typ.)			
		Panel Mounting version	76.00 x 31.50 x 26.40mm / 38.0g(typ.)			
		Din Mounting version	76.00 x 31.50 x 31.00mm / 58.0g(typ.)			
	Cooling Method	Free air convection				

Note: *The “Tip and barrel method” is used for ripple and noise test, output parallel 10μF electrolytic capacitor and 1μF ceramic capacitor.

MPL POWER ELEKTRO sp. z o.o., All rights reserved

PDM-05-xx(M)-y Series

Electromagnetic Compatibility (EMC)

Emissions (EMI)	CE	CISPR32/EN55032	CLASS B	
		EN55014-1		
	RE	CISPR32/EN55032	CLASS B	
		EN55014-1		
Immunity (EMS)	ESD	IEC/EN 61000-4-2	Contact ±6KV/Air ±8KV	perf. Criteria B
		EN55014-2		perf. Criteria B
	RS	IEC/EN 61000-4-3	10V/m	perf. Criteria A
		EN55014-2		perf. Criteria A
	EFT	IEC/EN 61000-4-4	±2KV	perf. Criteria B
		IEC/EN 61000-4-4	±4KV (See Fig. 2A for recommended circuit)	perf. Criteria B
		IEC/EN 61000-4-4	±4KV (See Fig. 3A for recommended circuit)	perf. Criteria A
		EN55014-2		perf. Criteria B
	Surge	IEC/EN 61000-4-5	line to line ±1KV	perf. Criteria B
		IEC/EN 61000-4-5	line to line ±2KV (See Fig. 2A for recommended circuit)	perf. Criteria B
		IEC/EN 61000-4-5	line to line ±2KV line to PE ±4KV (See Fig. 3A for recommended circuit)	perf. Criteria B
		EN55014-2		perf. Criteria B
	CS	IEC/EN 61000-4-6	10V r.m.s	perf. Criteria A
		EN55014-2		perf. Criteria A
	Voltage dip, short interruption and voltage variation	IEC/EN 61000-4-11	0%, 70%	perf. Criteria B
		EN55014-2		perf. Criteria B

Note:

1. When the output terminal of the product needs to be connected to PE through a Y capacitor or close to the metal frame, please refer to the Fig. 3 for recommended circuit.
2. Unless otherwise specified, EMC performance indicators are tested according to typical application circuits (Fig. 1)

Electromagnetic Comatibility (EMC) M version

Emissions (EMI)	CE	CISPR32/EN55032	CLASS B	
		EN55014-1		
	RE	CISPR32/EN55032	CLASS B	
		EN55014-1		
Immunity (EMS)	ESD	IEC/EN 61000-4-2	Contact ±6KV/Air ±8KV	perf. Criteria A
		EN55014-2		perf. Criteria A
	RS	IEC/EN 61000-4-3	10V/m	perf. Criteria A
		EN55014-2		perf. Criteria A
	EFT	IEC/EN 61000-4-4	±2KV	perf. Criteria A
		IEC/EN 61000-4-4	±4KV (See Fig. 2M for recommended circuit)	perf. Criteria A
		EN55014-2		perf. Criteria A
	Surge	IEC/EN 61000-4-5	line to line ±1KV	perf. Criteria A
		IEC/EN 61000-4-5	line to line ±2KV (See Fig. 2M for recommended circuit)	perf. Criteria A
		EN55014-2		perf. Criteria A
	CS	IEC/EN 61000-4-6	10V r.m.s	perf. Criteria A
		EN55014-2		perf. Criteria A
	Voltage dip, short interruption and voltage variation	IEC/EN 61000-4-11	0%, 70%	perf. Criteria B
		EN55014-2		perf. Criteria B

MPL POWER ELEKTRO sp. z o.o., All rights reserved

PDM-05-xx(M)-y Series

1. If the product is not operated within the required load range, the product performance cannot be guaranteed to comply with all parameters in the datasheet;
2. Unless otherwise specified, parameters in this datasheet were measured under the conditions of Ta=25℃, humidity<75% with nominal input voltage and rated output load;
3. All index testing methods in this datasheet are based on our company corporate standards;
4. We can provide product customization service, please contact our technicians directly for specific information;
5. Products are related to laws and regulations: see "Features" and "EMC";
6. Our products shall be classified according to ISO14001 and related environmental laws and regulations, and shall be handled by qualified units.

Characteristic Curve

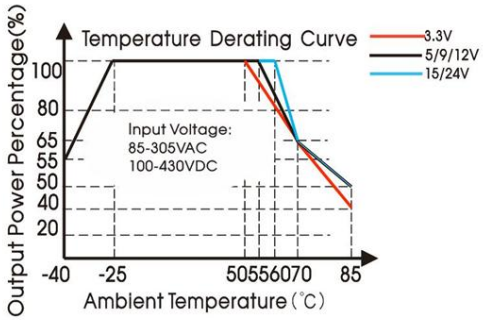

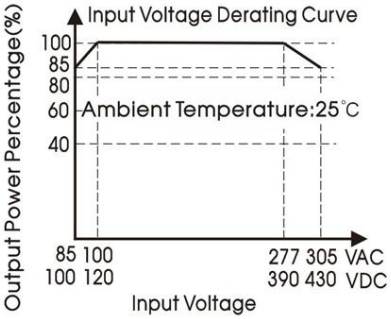

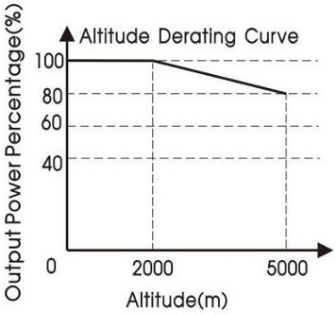

Note: ① With an AC input between 85-100V/277-305VAC and a DC input between 100-120V/390-430VDC, the output power must be derated as per temperature derating curves;

② This product is suitable for applications using natural air cooling.

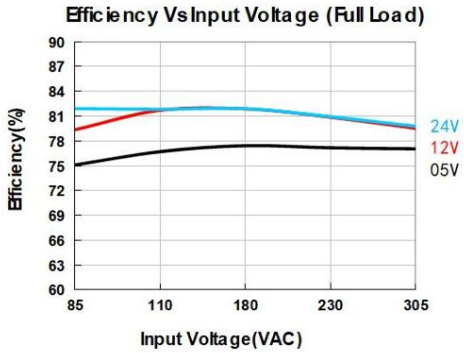

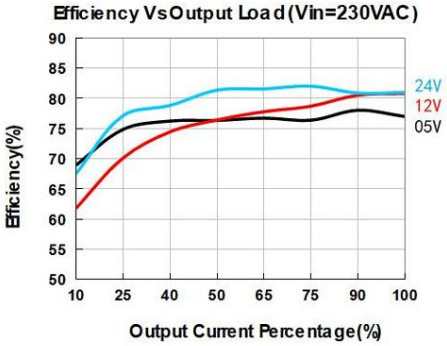

MPL POWER ELEKTRO sp. z o.o., All rights reserved

PDM-05-xx(M)-y Series

Characteristic Curve (M version)

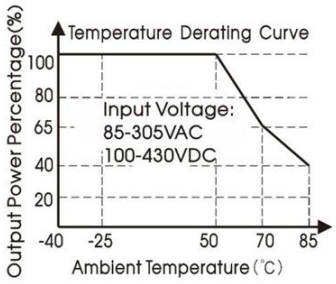

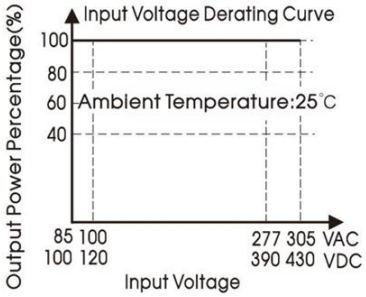

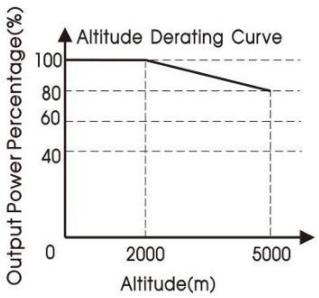

Note: This product is suitable for applications using natural air cooling.

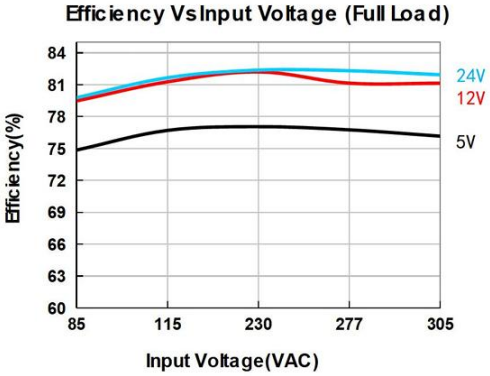

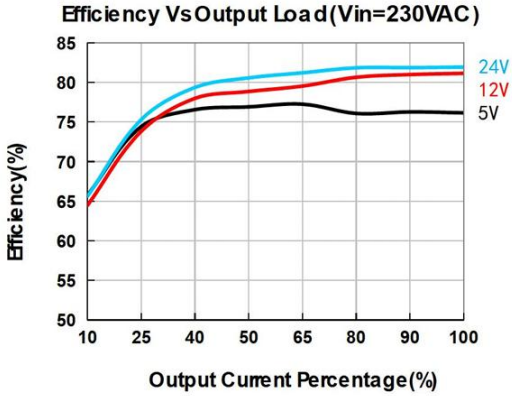

Design Reference PDM-05-xx

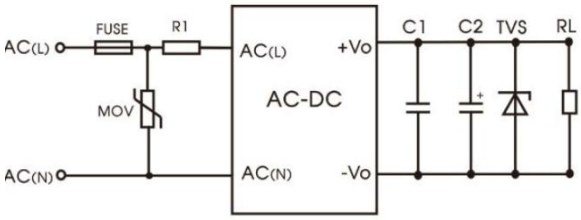

Fig. 1A: Typical circuit diagram

Part No.	C1 (μF)	C2 (μF)	Fuse	R1	TVS	MOV
PDM-05-03-y	1	150	1A / 300V, Slow-blow	12Ω / 3W (wire-wound resistor)	SMBJ7.0A	S10K350
PDM-05-05-y		150			SMBJ7.0A	
PDM-05-09-y		120			SMBJ12A	
PDM-05-12-y		120			SMBJ20A	
PDM-05-15-y		120			SMBJ20A	
PDM-05-24-y		68			SMBJ30A	
Output Filter Components: We recommend using an electrolytic capacitor with high frequency and low ESR rating for C2. Choose a capacitor Voltage with at lease 20% margin. C1 is a ceramic capacitor used for filtering high-frequency noise and TVS is recommended suppressor diode to protect the application in of a converter failure.						

MPL POWER ELEKTRO sp. z o.o., All rights reserved

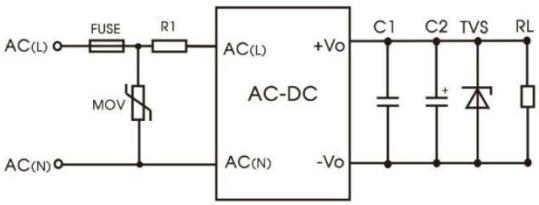

Fig. 2A: EMC application circuit with higher requirements

Component	Recommended value
MOV	S14K350
R1	33Ω / 3W (wire-wound resistor)
FUSE	2A / 300V, slow-blow

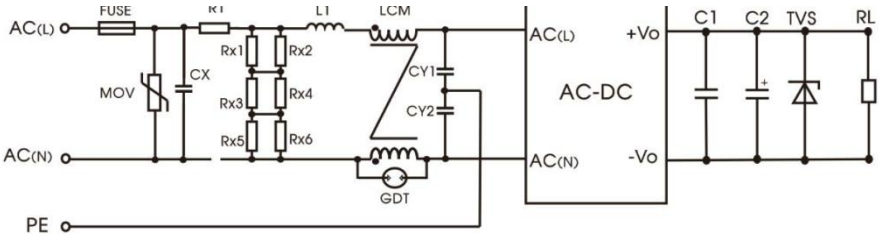

Fig. 3A: Recommended circuit for class I equipment

(Recommended when the output terminal of the product needs to be connected to PE or connected to PE through a Y capacitor)

Component	Recommended value
FUSE	2A / 300V slow-blow
CX	334K / 305VAC
R1	33Ω / 3W (wire-wound resistor)
L1	1.2mH / 0.3A
CY1/CY2	1nF / 400VAC
GDT	300V / 1kA
LCM	20mH
Note: Rx1 / Rx2 / Rx3 / Rx4 / Rx5 / Rx6 is the bleeder resistance of Cx and the recommended resistance is 1.5MΩ / 150VDC	

MPL POWER ELEKTRO sp. z o.o., All rights reserved

PDM-05-xx(M)-y Series

Design Reference PDM-05-xx (M version)

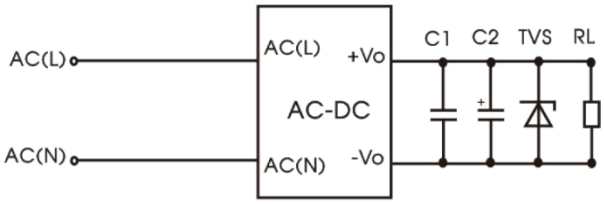

Fig. 1M: Typical circuit diagram

Part No.	C1	C2	TVS
PDM-05-03M	1μF / 50V	150	SMBJ7.0A
PDM-05-05M		150	SMBJ7.0A
PDM-05-09M		120	SMBJ12A
PDM-05-12M		120	SMBJ20A
PDM-05-15M		120	SMBJ20A
PDM-05-24M		68	SMBJ30A
Output Filter Components: We recommend using an electrolytic capacitor with high frequency and low ESR rating for C2. Choose a capacitor Voltage with at lease 20% margin. C1 is a ceramic capacitor used for filtering high-frequency noise and TVS is recommended suppressor diode to protect the application in of a converter failure.			

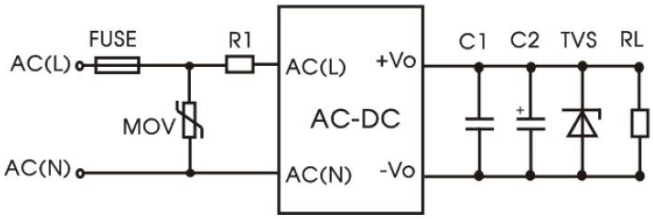

Fig. 2M: EMC application circuit with higher requirements

Component	Recommended value
FUSE	2A / 300V, slow-blow
MOV	S14K350
R1	12Ω / 3W (wire-wound resistor)

MPL POWER ELEKTRO sp. z o.o., All rights reserved

PDM-05-xx(M)-y Series

Dimensions and Recommended Layout PDM-05-xx

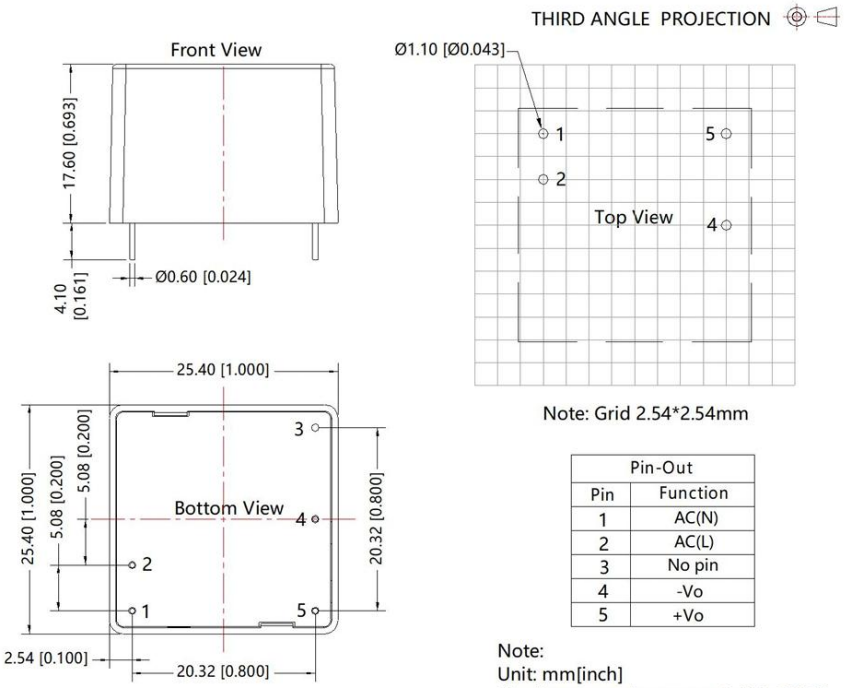

Pin-Out	
Pin	Function
1	AC(N)
2	AC(L)
3	No pin
4	-Vo
5	+Vo

Note:
Unit: mm[inch]
Pin diameter tolerances: ±0.10[±0.004]
General tolerances: ±0.50[±0.020]

Dimensions and Recommended Layout PDM-05-xx (M version)

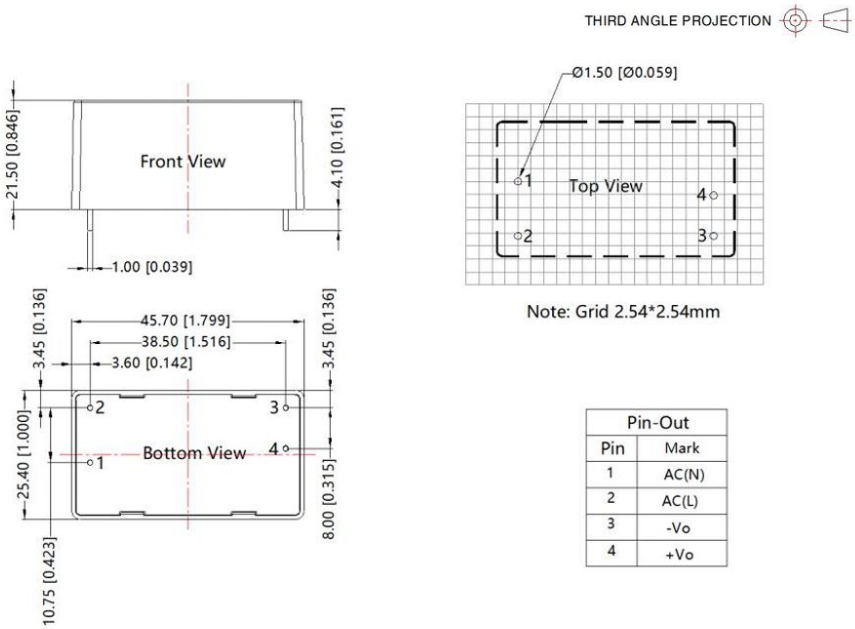

Pin-Out	
Pin	Mark
1	AC(N)
2	AC(L)
3	-Vo
4	+Vo

Note:
Unit: mm[inch]
Pin diameter tolerances: ±0.10[±0.004]
General tolerances: ±0.50[±0.020]

MPL POWER ELEKTRO sp. z o.o., All rights reserved

PDM-05-xx(M)-y Series

Dimensions of mechanical option PDM-05-xx-y

PANEL MOUNT OPTION **(y = P)**

THIRD ANGLE PROJECTION

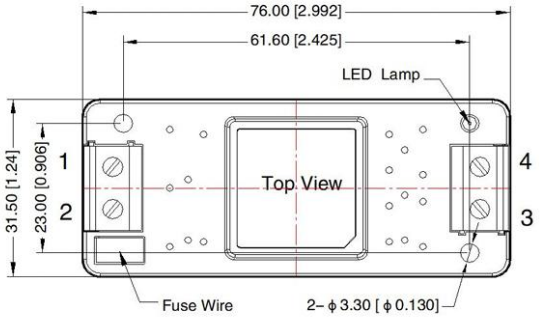

Pin–Out	
Pin	Function
1	AC(N)
2	AC(L)
3	–Vo
4	+Vo

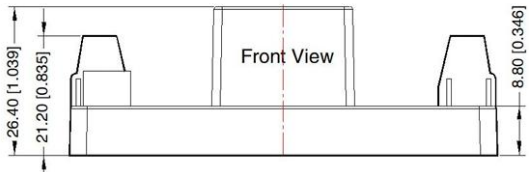

Note:
Unit: mm[inch]
Wire range: 24–12 AWG
Tightening torque: Max 0.4 N·m
General tolerances: ± 1.00[± 0.039]

DIN OPTION **(y = D)**

THIRD ANGLE PROJECTION

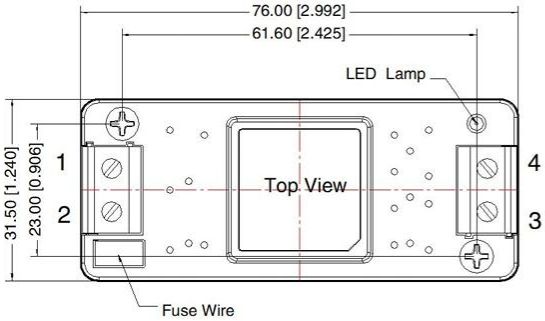

Pin–Out	
Pin	Function
1	AC(N)
2	AC(L)
3	–Vo
4	+Vo

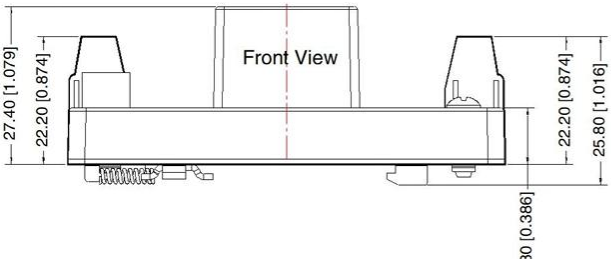

Note:
Unit: mm[inch]
Wire range: 24–12 AWG
Tightening torque: Max 0.4 N·m
Mounting rail: TS35, rail needs to connect safety ground
General tolerances: ± 1.00[± 0.039]

MPL POWER ELEKTRO sp. z o.o., All rights reserved

Rev 00/2025