ILLUMINATED TACT SWITCHES

» Features

- Miniature & low cost switch with full surface illumination by LED.
- For PC Board Terminals are all IC pitched (multiple of 2.54mm).
- Many LED lights are available.

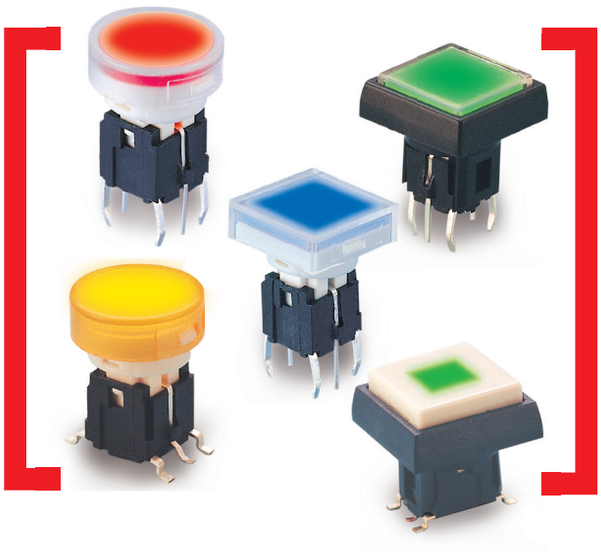

» Applications

- Operating switches in all types of electronic equipment such as audio apparatus, office equipment , communications apparatus, TV sets, VCRs, etc.

» Specifications

SERIES	PB617	PB627
Rating	50mA 48VDC	10mA 12VDC
Insulation Resistance	100MΩ Min (at 500 VDC)	100MΩ Min (at 500 VDC)
Dielectric Strength	AC 250V (50/60 Hz for 1 minute)	AC 250V (50/60 Hz for 1 minute)
Contact Resistance	100mΩ Max. (Initial)	500Ω Max. (Initial)
Electrically Life	300,000 Cycles Min	100,000 Cycles Min
Ambient Temperature	-20°C~ +70°C	-20°C~ +70°C
Operating Force	140 ± 40gf	100 ± 40gf
Total Travel	0.25 ± 0.1mm	1.0 ± 0.2mm

» Product selection

PB □ □ □ □ □

5 LED BRIGHTNESS
4 LED COLOR
3 FUNCTION
2 BUTTON TYPE
1 SPRING MATERIAL

1 SPRING MATERIAL

617	Metal Dome
627	Rubber Dome

2 BUTTON TYPE

1F 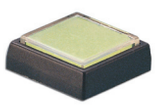
1
2
3F 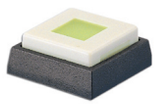

sales@prom-elec.com / ООО ПРОМЭЛЕКТРОНИКА

③ FUNCTION

Non-illuminated		Illuminated	
_	Standard type	L	Standard type
M	SMT type	ML	SMT type

④ LED COLOR

1	Red
2	Yellow
3	Green
4	Blue
5	White
6	Pure Green
12	Red / Yellow
13	Red / Green
23	Yellow / Green

» LED Specifications

Color	VR	IF	Recommended Operating Current	VF	
				Nom	Max
Red	DC 5V	20mA	20mA	1.7V	2.4V
Green	DC 5V	20mA	20mA	1.9V	2.4V
Yellow	DC 5V	20mA	20mA	1.9V	2.4V
Blue	DC 5V	20mA	20mA	3.0V	3.6V
White	DC 5V	20mA	20mA	3.0V	3.6V

⑤ LED BRIGHTNESS

_	Standard
C	Customization

» Operating characteristics

Unit: mm

Dimensions

Circuit P.C.B Layout

PB6171FL(Metal)
PB6271FL(Rubber)

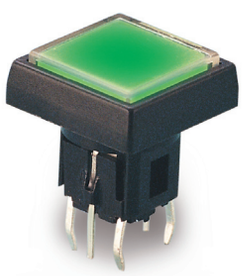

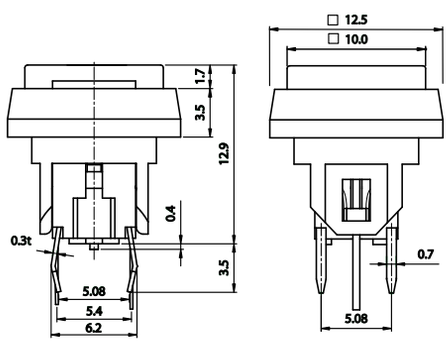

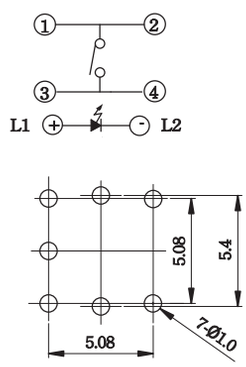

PB6171L(Metal)
PB6271L(Rubber)

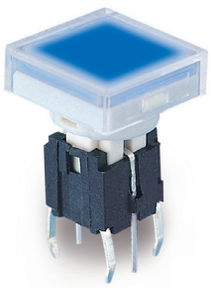

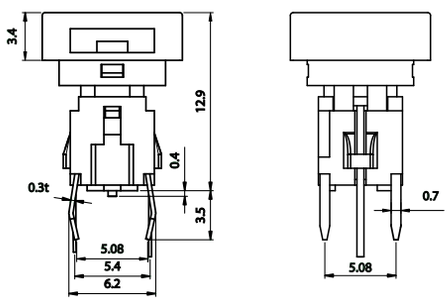

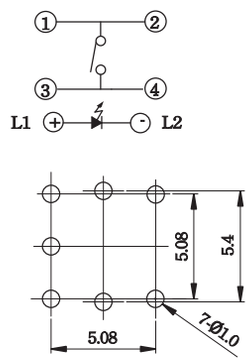

» Operating characteristics

Unit: mm

Dimensions **Circuit P.C.B Layout**

PB6172ML(Metal)
PB6272ML(Rubber)

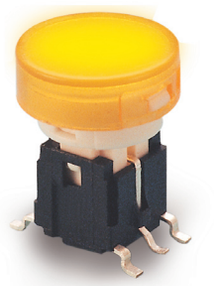

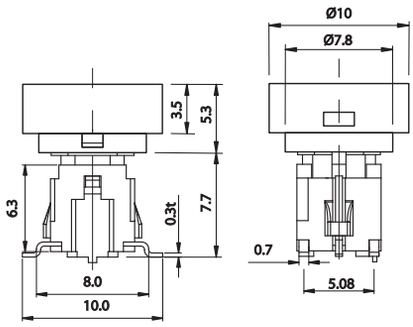

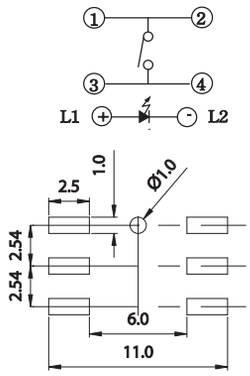
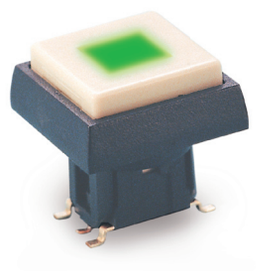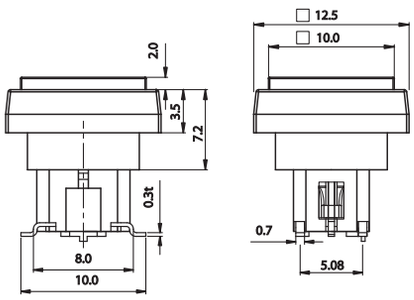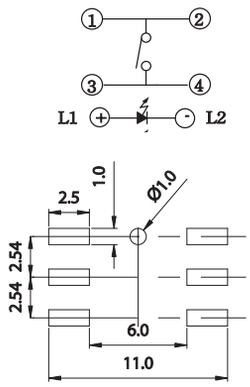
PB6173FML(Metal)
PB6273FML(Rubber)