ENGINEERING
TOMORROW

Data Sheet

Solenoid valve
Type **EV310A**

Direct-operated 3/2-way solenoid valves for use in industrial applications

EV310A covers a wide range of small competitive, direct-operated 3/2-way solenoid valves for use within industrial applications, for example as pilot valve.

Features

- For water, oil, compressed air and similar neutral media
- Screw on coil
- Ambient temperature: Up to 50 °C
- Coil enclosure: Up to IP65
- Viscosity: Up to 20 cSt

AI204086434876en-000801

sales@prom-elec.com / ООО ПРОМЭЛЕКТРОНИКА

1 Portfolio overview

Table 1: Portfolio overview

Features	EV310A NC	EV310A NO	EV310A NC MAN
Body material	Brass	Brass	Brass
DN [mm]	1.2-2	1.2-1.5	1.5
Connection	G1/8"-1/4"	G1/8"	G1/8"-1/4"
Sealing material	FKM	FKM	FKM
Kv [m³/h]	0.04-0.08	0.04-0.07	0.07
Differential pressure range [bar]	0-20	0-13	0-12
Temperature range [°C]	-10 - 100	-10 - 100	-10 - 100
Manual override (MAN)	No	No	Yes

2 Functions

2.1 Function, NC / NC MAN

Coil voltage disconnected (closed):
When the voltage to the coil (4) is disconnected, the armature (2) with the valve plates (3) is pressed down by the closing spring (1) and closes the connection between P and A. At the same time, the connection between gates A and R is opened. The connection between P and A will be closed for as long as the voltage to the coil is disconnected.

Coil voltage connected (open):
When voltage is applied, the armature (2) with the valve plates (3) is lifted and closes the connection between A and R. At the same time, the connection between P and A is opened. The connection between P and A will be open for as long as there is voltage to the coil.

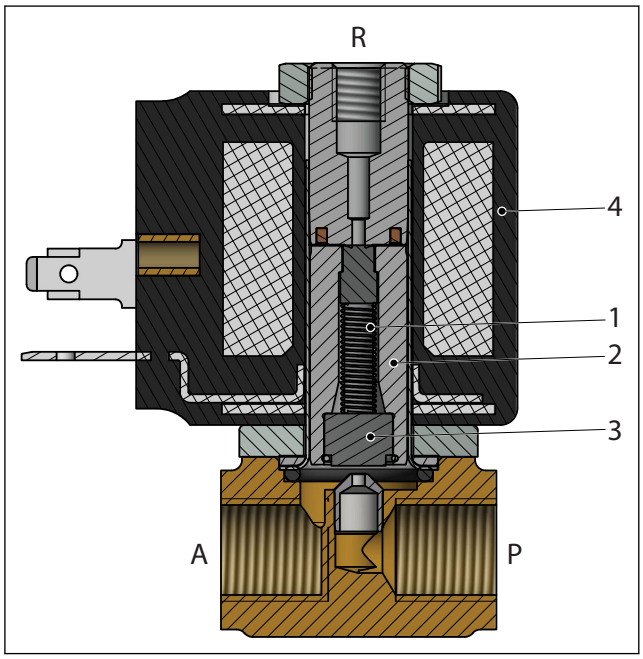

1	Opening spring
2	Armature
3	Valve plate
4	Coil
P	Pressure gate
A	Working gate
R	Relief gate

2.2 Function, NO

Coil voltage disconnected (open):
When the voltage is disconnected, the armature (2) with the valve plates (3) is pressed down by the opening spring (1) and closes the connection between A and R. At the same time, the connection between P and A is open. The connection between P and A will be open for as long as the voltage to the coil is disconnected.

Coil voltage connected (closed):
When voltage is applied to the coil (4), the armature (2) with the valve plates (3) is lifted and closes the connection between P and A. At the same time, the connection between gates A and R is opened.

The connection between P and A will be closed for as long as there is voltage to the coil.

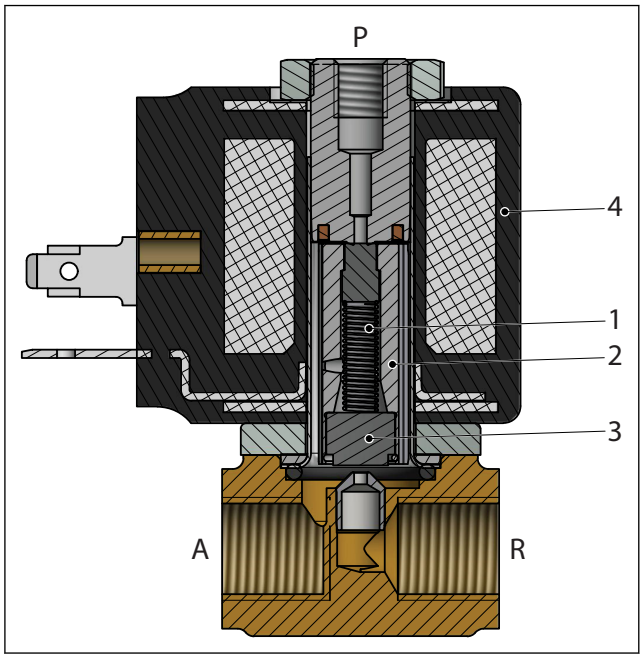

1	Opening spring
2	Armature
3	Valve plate
4	Coil
P	Pressure gate
A	Working gate
R	Relief gate

3 Applications

It is recommended to use a filter in front of the valve. Recommended filter 50 mesh (297 microns).

Figure 1: Filter

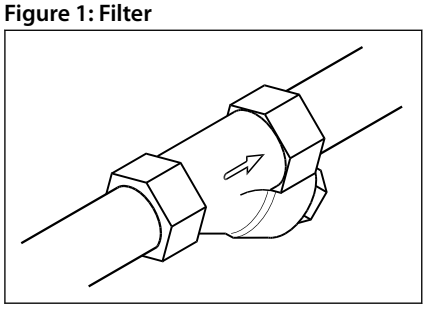

In water applications, exercise the valves at least once every 24 hours, meaning change the state of the valve. The valve exercise will minimize the risk of the valve sticking due to calcium carbonate, zinc or iron oxide build-up.

Figure 2: Exercise: Valve on/off

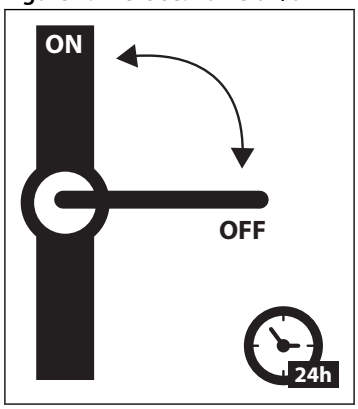

To minimize scaling, and corrosion attack it is recommended that the water passing the valve have the following values:

- Hardness 6 - 18 °dH to avoid scaling (chalk / lime stone build up)
- Conductivity 50 – 800 µS/cm to avoid brass dezincification and corrosion
- Above 25 °C media temperature avoid stagnant water inside the valve to avoid dezincification and corrosion attack

4 Product specification

4.1 Technical data

Table 2: Technical data

Media	FKM	For water, oil, compressed air and similar neutral media
Media temperature [°C]	FKM	-10 - 100 °C
Ambient temperature [°C]	Up to 50 °C	
Kv value [m³/h]	DN1.2	0.04 m³/h
	DN1.5	0.07 m³/h
	DN2	0.08 m³/h
Min. Opening differential pressure [bar]	0 bar	
Max. Opening differential pressure [bar]	Up to 20 bar	
Max. working pressure [bar]	Up to 20 bar (Equal to max. differential pressure)	
Max. test pressure [bar]	50 bar	
Viscosity [cSt]	Max. 20 cSt	

Differential pressure range

Table 3: Differential pressure range

Connection ISO228/1	Orifice size	Differential pressure, min. to max								
		NC/NC MAN			NO					
		AC/AM			AB AC	AB/AK DC	AC AC	AC DC	AM AC	AM DC
	[mm]	Water	Oil	Air	[bar]					
		[bar]								
G⅛	1.2	0-18	0-9	0-20	0-6	0-4	0-9	0-7	0-13	0-9
	1.5	0-10	0-5	0-12	0-3	0-2	0-5	0-3.5	0-7	0-5
G¼	1.2	0-18	0-9	0-20						
	1.5	0-10	0-5	0-12						
	2	0-6.5	0-4	0-8						

Time to open/close

Table 4: Time to open/close

Main type	EV310A NC/NO/NC MAN
Time to open [ms][1]	7 – 10
Time to close [ms][1]	7 – 10

[1] The times are indicative.

Materials

Table 5: Materials

Components	Materials	Specifications
Valve body	Brass	W.no. 2.0401
Armature orifice	Stainless steel	W.no. 1.4305 / AISI 303
Armature	Stainless steel	W.no. 1.4016 / AISI 430
Armature tube	Stainless steel	W.no. 1.4303 / AISI 305
Armature stop	Stainless steel	W.no. 1.4016 / AISI 430
Spring	Stainless steel	W.no. 1.4310 / AISI 301
O-ring/Valve plate	FKM	-
Manual override	Polymer	Polysulfon black

4.2 Dimension and Weight

Table 6: Dimensions and weight, NC, NO and NC MAN

Thread ISO 228/1	L [mm]	B [mm] Coil type		H [mm]	A [mm]	Weight without coil [kg]
		AB / AC	AM / AK			
G ⅛	26	22	33	54	13	0.085
G ¼	35	22	33	59	17.5	0.110

Figure 3: Dimensions

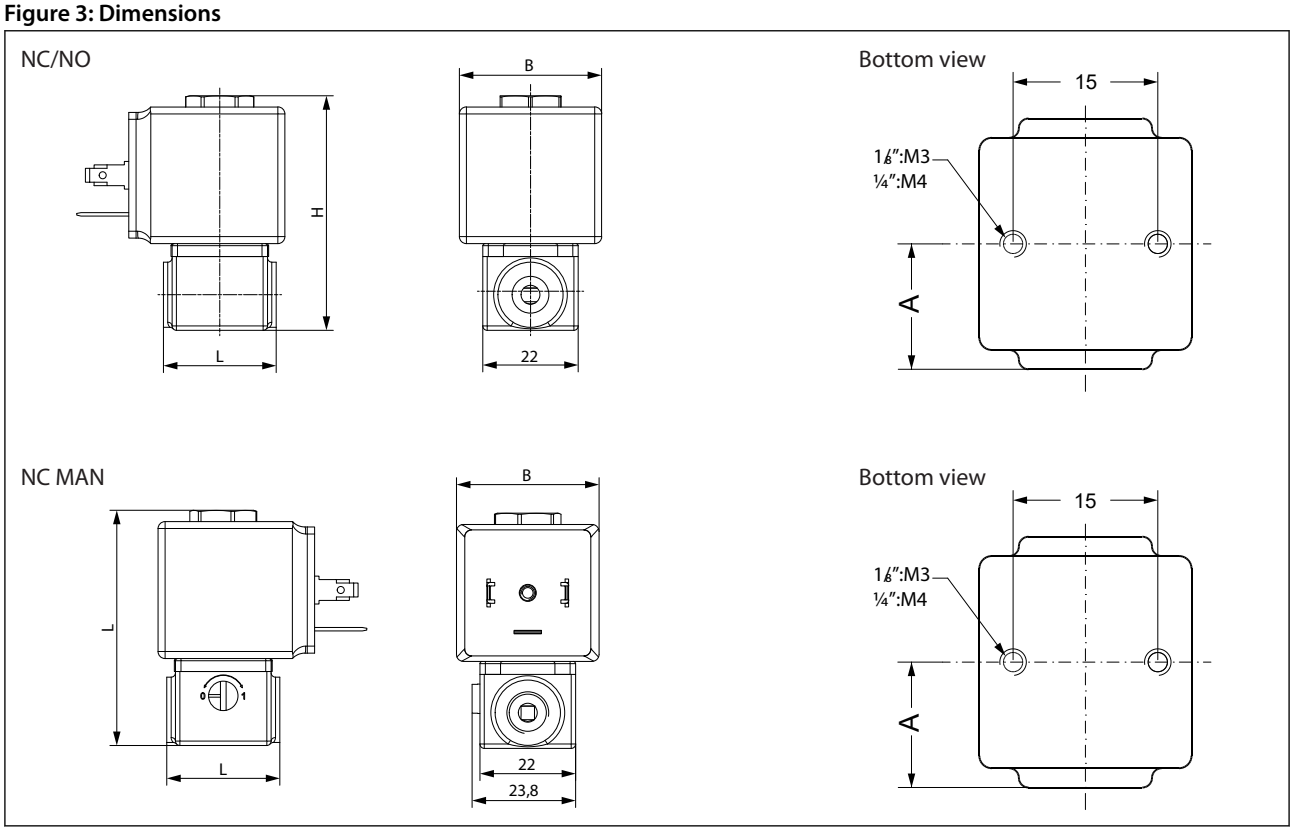

4.3 Mounting

Figure 4: Mounting angle

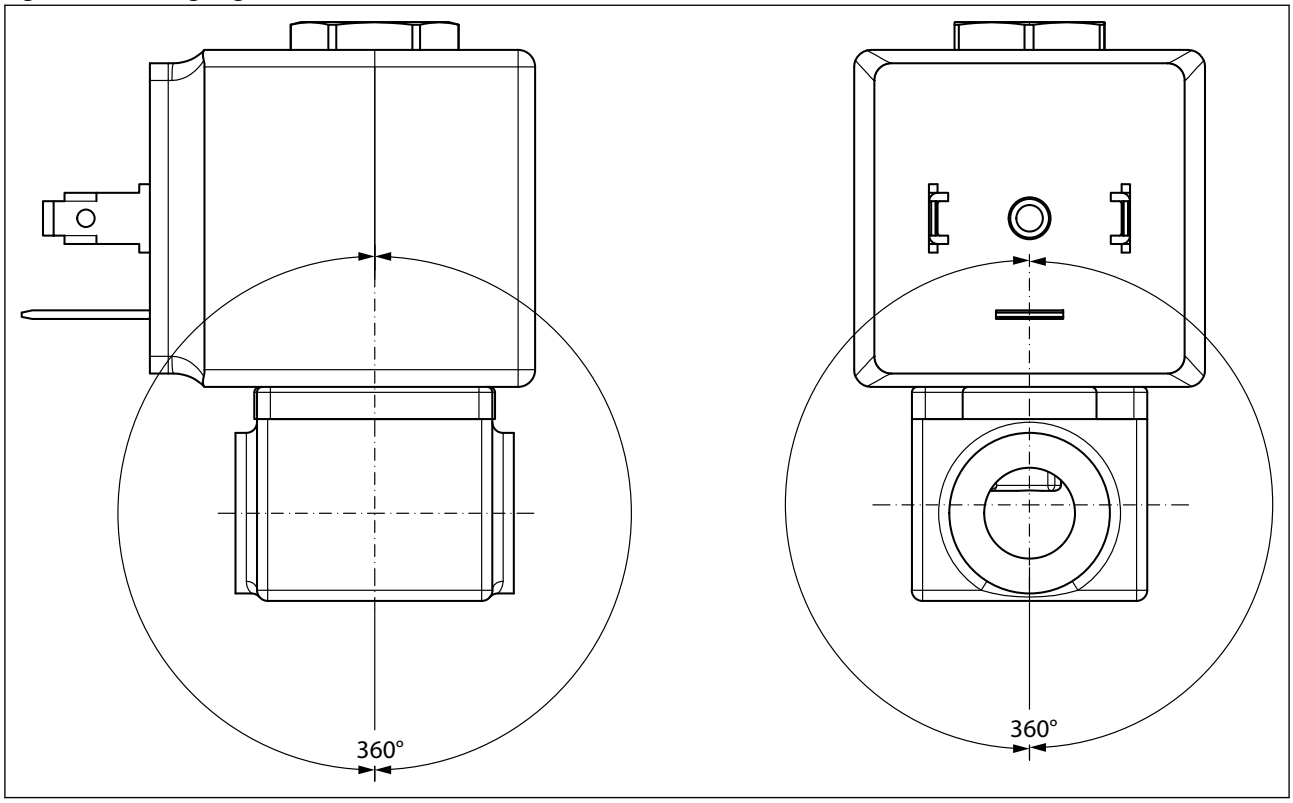

5 Ordering

5.1 Parts program

Table 7: Brass, valve body NC, NC MAN, NO

Connection ISO 228/1	Orifice	Kv value	Function		
	[mm]	[m³/h]	NC	NC MAN	NO
G ⅛	1.2	0.04	032H8085		032H8125
	1.5	0.07	032H8087	032H8143	032H8127
G ¼	1.2	0.04	032H8095		
	1.5	0.07	032H8097	032H8153	
	2	0.08	032H8099		

5.2 Accessories

Coils

Table 8: Below coils can be used with EV310A

Coil	Type	Power consumption	Enclosure	Features
	AM	7.5 W AC 9.5 W DC	IP00 with spade connector, IP65 with cable plug	Cable plug
	AC	7 W AC 10 W DC	IP00 with spade connector, IP65 with cable plug	Industrial plug
	AB	4.5 W AC 5 W DC	IP00 with spade connector, IP65 with cable plug	Industrial plug
	AK	3 W DC	IP00 with spade connector, IP65 with cable plug	Cable plug

Cable plug

Figure 5: Cable plug

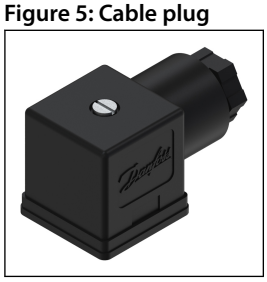

Table 9: Cable plug

Cable plug size	Description	Code no
DIN 18	Cable plug IP65	042N1278

Figure 6: Cable plug

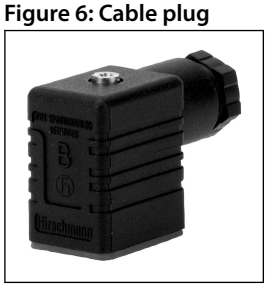

Application	Code number
GM 209 (Black) cable plug according to DIN 43650-B PG9	042N0139

6 Online support

Danfoss offers a wide range of support along with our products, including digital product information, software, mobile apps, and expert guidance. See the possibilities below.

The Danfoss Product Store

The Danfoss Product Store is your one-stop shop for everything product related—no matter where you are in the world or what area of the cooling industry you work in. Get quick access to essential information like product specs, code numbers, technical documentation, certifications, accessories, and more.
Start browsing at store.danfoss.com.

Find technical documentation

Find the technical documentation you need to get your project up and running. Get direct access to our official collection of data sheets, certificates and declarations, manuals and guides, 3D models and drawings, case stories, brochures, and much more.

Start searching now at www.danfoss.com/en/service-and-support/documentation.

Danfoss Learning

Danfoss Learning is a free online learning platform. It features courses and materials specifically designed to help engineers, installers, service technicians, and wholesalers better understand the products, applications, industry topics, and trends that will help you do your job better.

Create your Danfoss Learning account for free at www.danfoss.com/en/service-and-support/learning.

Get local information and support

Local Danfoss websites are the main sources for help and information about our company and products. Find product availability, get the latest regional news, or connect with a nearby expert—all in your own language.

Find your local Danfoss website here: www.danfoss.com/en/choose-region.

Spare Parts

Get access to the Danfoss spare parts and service kit catalog right from your smartphone. The app contains a wide range of components for air conditioning and refrigeration applications, such as valves, strainers, pressure switches, and sensors.

Download the Spare Parts app for free at www.danfoss.com/en/service-and-support/downloads.

Any information, including, but not limited to information on selection of product, its application or use, product design, weight, dimensions, capacity or any other technical data in product manuals, catalogues descriptions, advertisements, etc. and whether made available in writing, orally, electronically, online or via download, shall be considered informative, and is only binding if and to the extent, explicit reference is made in a quotation or order confirmation. Danfoss cannot accept any responsibility for possible errors in catalogues, brochures, videos and other material. Danfoss reserves the right to alter its products without notice. This also applies to products ordered but not delivered provided that such alterations can be made without changes to form, fit or function of the product. All trademarks in this material are property of Danfoss A/S or Danfoss group companies. Danfoss and the Danfoss logo are trademarks of Danfoss A/S. All rights reserved.