STM32F401xD STM32F401xE

ARM® Cortex®-M4 32b MCU+FPU, 105 DMIPS, 512KB Flash/96KB RAM, 11 TIMs, 1 ADC, 11 comm. interfaces

Datasheet - production data

Features

- Core: ARM® 32-bit Cortex®-M4 CPU with FPU, Adaptive real-time accelerator (ART Accelerator™) allowing 0-wait state execution from Flash memory, frequency up to 84 MHz, memory protection unit, 105 DMIPS/1.25 DMIPS/MHz (Dhrystone 2.1), and DSP instructions
- Memories
  - up to 512 Kbytes of Flash memory
  - up to 96 Kbytes of SRAM
- Clock, reset and supply management
  - 1.7 V to 3.6 V application supply and I/Os
  - POR, PDR, PVD and BOR
  - 4-to-26 MHz crystal oscillator
  - Internal 16 MHz factory-trimmed RC
  - 32 kHz oscillator for RTC with calibration
  - Internal 32 kHz RC with calibration
- Power consumption
  - Run: 146 µA/MHz (peripheral off)
  - Stop (Flash in Stop mode, fast wakeup time): 42 µA Typ @ 25C; 65 µA max @25 °C
  - Stop (Flash in Deep power down mode, fast wakeup time): down to 10 µA @ 25 °C; 30 µA max @25 °C
  - Standby: 2.4 µA @25 °C / 1.7 V without RTC; 12 µA @85 °C @1.7 V
  - V_{BAT} supply for RTC: 1 µA @25 °C
- 1×12-bit, 2.4 MSPS A/D converter: up to 16 channels
- General-purpose DMA: 16-stream DMA controllers with FIFOs and burst support
- Up to 11 timers: up to six 16-bit, two 32-bit timers up to 84 MHz, each with up to four IC/OC/PWM or pulse counter and quadrature (incremental) encoder input, two watchdog timers (independent and window) and a SysTick timer

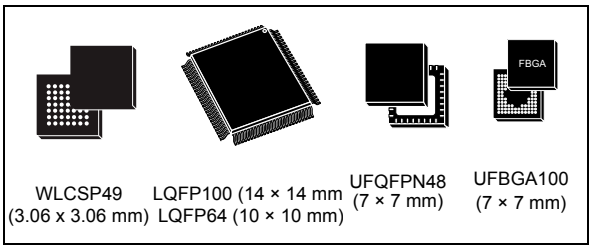

- Debug mode
  - Serial wire debug (SWD) & JTAG interfaces
  - Cortex®-M4 Embedded Trace Macrocell™
- Up to 81 I/O ports with interrupt capability
  - Up to 78 fast I/Os up to 42 MHz
  - All I/O ports are 5 V-tolerant
- Up to 12 communication interfaces
  - Up to 3 x I^2C interfaces (SMBus/PMBus)
  - Up to 3 USARTs (2 x 10.5 Mbit/s, 1 x 5.25 Mbit/s), ISO 7816 interface, LIN, IrDA, modem control)
  - Up to 4 SPIs (up to 42Mbit/s at f_{CPU} = 84 MHz), SPI2 and SPI3 with muxed full-duplex I^2S to achieve audio class accuracy via internal audio PLL or external clock
  - SDIO interface
  - Advanced connectivity: USB 2.0 full-speed device/host/OTG controller with on-chip PHY
- CRC calculation unit
- 96-bit unique ID
- RTC: subsecond accuracy, hardware calendar
- All packages (WLCSP49, LQFP64/100, UFQFPN48, UFBGA100) are ECOPACK®2

Table 1. Device summary

Reference	Part number
STM32F401xD	STM32F401CD, STM32F401RD, STM32F401VD
STM32F401xE	STM32F401CE, STM32F401RE, STM32F401VE

This is information on a product in full production. www.st.com

sales@prom-elec.com / ООО ПРОМЭЛЕКТРОНИКА

Contents

1 Introduction 9

2 Description 10

2.1 Compatibility with STM32F4 series 12

3 Functional overview 15

3.1 ARM® Cortex®-M4 with FPU core with embedded Flash and SRAM . . . 15

3.2 Adaptive real-time memory accelerator (ART Accelerator™) 15

3.3 Memory protection unit 15

3.4 Embedded Flash memory 16

3.5 CRC (cyclic redundancy check) calculation unit 16

3.6 Embedded SRAM 16

3.7 Multi-AHB bus matrix 16

3.8 DMA controller (DMA) 17

3.9 Nested vectored interrupt controller (NVIC) 18

3.10 External interrupt/event controller (EXTI) 18

3.11 Clocks and startup 18

3.12 Boot modes 19

3.13 Power supply schemes 19

3.14 Power supply supervisor 20

3.14.1 Internal reset ON 20

3.14.2 Internal reset OFF 20

3.15 Voltage regulator 21

3.15.1 Regulator ON 21

3.15.2 Regulator OFF 22

3.15.3 Regulator ON/OFF and internal power supply supervisor availability . . 25

3.16 Real-time clock (RTC) and backup registers 25

3.17 Low-power modes 26

3.18 V_{BAT} operation 26

3.19 Timers and watchdogs 27

3.19.1 Advanced-control timers (TIM1) 27

3.19.2 General-purpose timers (TIMx) 28

3.19.3 Independent watchdog 28
3.19.4 Window watchdog 28
3.19.5 SysTick timer 29
3.20 Inter-integrated circuit interface (I2C) 29
3.21 Universal synchronous/asynchronous receiver transmitters (USART) . . 29
3.22 Serial peripheral interface (SPI) 30
3.23 Inter-integrated sound (I^2S) 30
3.24 Audio PLL (PLLI2S) 30
3.25 Secure digital input/output interface (SDIO) 31
3.26 Universal serial bus on-the-go full-speed (OTG_FS) 31
3.27 General-purpose input/outputs (GPIOs) 31
3.28 Analog-to-digital converter (ADC) 31
3.29 Temperature sensor 32
3.30 Serial wire JTAG debug port (SWJ-DP) 32
3.31 Embedded Trace Macrocell™ 32

4 Pinouts and pin description 33

5 Memory mapping 51

6 Electrical characteristics 55
6.1 Parameter conditions 55
6.1.1 Minimum and maximum values 55
6.1.2 Typical values 55
6.1.3 Typical curves 55
6.1.4 Loading capacitor 55
6.1.5 Pin input voltage 56
6.1.6 Power supply scheme 57
6.1.7 Current consumption measurement 58
6.2 Absolute maximum ratings 58
6.3 Operating conditions 60
6.3.1 General operating conditions 60
6.3.2 VCAP1/VCAP2 external capacitors 62
6.3.3 Operating conditions at power-up/power-down (regulator ON) 63
6.3.4 Operating conditions at power-up / power-down (regulator OFF) 63
6.3.5 Embedded reset and power control block characteristics 64

6.3.6 Supply current characteristics 65
6.3.7 Wakeup time from low-power modes 75
6.3.8 External clock source characteristics 76
6.3.9 Internal clock source characteristics 80
6.3.10 PLL characteristics 82
6.3.11 PLL spread spectrum clock generation (SSCG) characteristics 84
6.3.12 Memory characteristics 85
6.3.13 EMC characteristics 87
6.3.14 Absolute maximum ratings (electrical sensitivity) 89
6.3.15 I/O current injection characteristics 90
6.3.16 I/O port characteristics 91
6.3.17 NRST pin characteristics 96
6.3.18 TIM timer characteristics 97
6.3.19 Communications interfaces 98
6.3.20 12-bit ADC characteristics 106
6.3.21 Temperature sensor characteristics 112
6.3.22 V_{BAT} monitoring characteristics 112
6.3.23 Embedded reference voltage 112
6.3.24 SD/SDIO MMC card host interface (SDIO) characteristics 113
6.3.25 RTC characteristics 114

7 Package characteristics 115

7.1 Package mechanical data 115
7.1.1 WLCSP49, 3.06 x 3.06 mm, 0.4 mm pitch wafer level chip size package 116
7.1.2 UFQFPN48, 7 x 7 mm, 0.5 mm pitch package 119
7.1.3 LQFP64, 10 x 10 mm, 64-pin low-profile quad flat package 122
7.1.4 LQFP100, 14 x 14 mm, 100-pin low-profile quad flat package 125
7.1.5 UFBGA100, 7 x 7 mm, 0.5 mm pitch package 128
7.2 Thermal characteristics 131
7.2.1 Reference document 131

8 Part numbering 132

9 Revision history 134

List of tables

Table 1. Device summary . . . 1
Table 2. STM32F401xD/xE features and peripheral counts . . . 11
Table 3. Regulator ON/OFF and internal power supply supervisor availability . . . 25
Table 4. Timer feature comparison . . . 27
Table 5. Comparison of I2C analog and digital filters . . . 29
Table 6. USART feature comparison . . . 30
Table 7. Legend/abbreviations used in the pinout table . . . 38
Table 8. STM32F401xD/xE pin definitions . . . 38
Table 9. Alternate function mapping . . . 45
Table 10. STM32F401xD register boundary addresses . . . 52
Table 11. Voltage characteristics . . . 58
Table 12. Current characteristics . . . 59
Table 13. Thermal characteristics . . . 59
Table 14. General operating conditions . . . 60
Table 15. Features depending on the operating power supply range . . . 61
Table 16. VCAP1/VCAP2 operating conditions . . . 62
Table 17. Operating conditions at power-up / power-down (regulator ON) . . . 63
Table 18. Operating conditions at power-up / power-down (regulator OFF) . . . 63
Table 19. Embedded reset and power control block characteristics . . . 64
Table 20. Typical and maximum current consumption, code with data processing (ART accelerator disabled) running from SRAM - V_{DD} = 1.7 V . . . 66
Table 21. Typical and maximum current consumption, code with data processing (ART accelerator disabled) running from SRAM . . . 66
Table 22. Typical and maximum current consumption in run mode, code with data processing (ART accelerator enabled except prefetch) running from Flash memory- V_{DD} = 1.7 V . . . 67
Table 23. Typical and maximum current consumption in run mode, code with data processing (ART accelerator enabled except prefetch) running from Flash memory - V_{DD} = 3.3 V . . . 67
Table 24. Typical and maximum current consumption in run mode, code with data processing (ART accelerator disabled) running from Flash memory . . . 68
Table 25. Typical and maximum current consumption in run mode, code with data processing (ART accelerator enabled with prefetch) running from Flash memory . . . 68
Table 26. Typical and maximum current consumption in Sleep mode . . . 69
Table 27. Typical and maximum current consumptions in Stop mode - V_{DD}=1.8 V . . . 69
Table 28. Typical and maximum current consumption in Stop mode - V_{DD}=3.3 V . . . 70
Table 29. Typical and maximum current consumption in Standby mode - V_{DD}=1.8 V . . . 70
Table 30. Typical and maximum current consumption in Standby mode - V_{DD}=3.3 V . . . 70
Table 31. Typical and maximum current consumptions in V_{BAT} mode . . . 71
Table 32. Switching output I/O current consumption . . . 73
Table 33. Peripheral current consumption . . . 74
Table 34. Low-power mode wakeup timings(1) . . . 75
Table 35. High-speed external user clock characteristics . . . 76
Table 36. Low-speed external user clock characteristics . . . 77
Table 37. HSE 4-26 MHz oscillator characteristics . . . 78
Table 38. LSE oscillator characteristics (f_{LSE} = 32.768 kHz) . . . 79
Table 39. HSI oscillator characteristics . . . 80
Table 40. LSI oscillator characteristics . . . 81
Table 41. Main PLL characteristics . . . 82
Table 42. PLLI2S (audio PLL) characteristics . . . 83

Table 43. SSCG parameters constraint . . . 84
Table 44. Flash memory characteristics . . . 85
Table 45. Flash memory programming . . . 86
Table 46. Flash memory programming with V_{PP} voltage . . . 86
Table 47. Flash memory endurance and data retention . . . 87
Table 48. EMS characteristics for LQFP100 package . . . 88
Table 49. EMI characteristics for WLCSP49 . . . 89
Table 50. EMI characteristics for LQFP100 . . . 89
Table 51. ESD absolute maximum ratings . . . 90
Table 52. Electrical sensitivities . . . 90
Table 53. I/O current injection susceptibility . . . 91
Table 54. I/O static characteristics . . . 91
Table 55. Output voltage characteristics . . . 94
Table 56. I/O AC characteristics . . . 94
Table 57. NRST pin characteristics . . . 96
Table 58. TIMx characteristics . . . 97
Table 59. I^2C characteristics . . . 98
Table 60. SCL frequency (f_{PCLK1}= 42 MHz, V_{DD} = V_{DD_I2C} = 3.3 V) . . . 99
Table 61. SPI dynamic characteristics . . . 100
Table 62. I^2S dynamic characteristics . . . 103
Table 63. USB OTG FS startup time . . . 105
Table 64. USB OTG FS DC electrical characteristics . . . 105
Table 65. USB OTG FS electrical characteristics . . . 106
Table 66. ADC characteristics . . . 106
Table 67. ADC accuracy at f_{ADC} = 18 MHz . . . 108
Table 68. ADC accuracy at f_{ADC} = 30 MHz . . . 108
Table 69. ADC accuracy at f_{ADC} = 36 MHz . . . 108
Table 70. ADC dynamic accuracy at f_{ADC} = 18 MHz - limited test conditions . . . 109
Table 71. ADC dynamic accuracy at f_{ADC} = 36 MHz - limited test conditions . . . 109
Table 72. Temperature sensor characteristics . . . 112
Table 73. Temperature sensor calibration values . . . 112
Table 74. V_{BAT} monitoring characteristics . . . 112
Table 75. Embedded internal reference voltage . . . 112
Table 76. Internal reference voltage calibration values . . . 113
Table 77. Dynamic characteristics: SD / MMC characteristics . . . 114
Table 78. RTC characteristics . . . 114
Table 79. STM32F401xCE WLCSP49 wafer level chip size package mechanical data . . . 116
Table 80. WLCSP49 recommended PCB design rules (0.4 mm pitch) . . . 118
Table 81. UFQFPN48, 7 x 7 mm, 0.5 mm pitch, package mechanical data . . . 119
Table 82. LQFP64, 10 x 10 mm, 64-pin low-profile quad flat package mechanical data . . . 123
Table 83. LQPF100, 14 x 14 mm, 100-pin low-profile quad flat package mechanical data . . . 126
Table 84. UFBGA100, 7 x 7 mm, 0.50 mm pitch, ultra fine pitch ball grid array package mechanical data . . . 128
Table 85. Package thermal characteristics . . . 131
Table 86. Ordering information scheme . . . 132
Table 87. Device order codes . . . 133
Table 88. Document revision history . . . 134

List of figures

Figure 1. Compatible board design for LQFP100 package . . . 12
Figure 2. Compatible board design for LQFP64 package . . . 13
Figure 3. STM32F401xD/xE block diagram . . . 14
Figure 4. Multi-AHB matrix . . . 17
Figure 5. Power supply supervisor interconnection with internal reset OFF . . . 20
Figure 6. PDR_ON control with internal reset OFF . . . 21
Figure 7. Regulator OFF . . . 23
Figure 8. Startup in regulator OFF: slow V_{DD} slope - power-down reset risen after V_{CAP_1}/V_{CAP_2} stabilization . . . 24
Figure 9. Startup in regulator OFF mode: fast V_{DD} slope - power-down reset risen before V_{CAP_1}/V_{CAP_2} stabilization . . . 24
Figure 10. STM32F401xD/xE WLCSP49 pinout . . . 33
Figure 11. STM32F401xD/xE UFQFPN48 pinout . . . 34
Figure 12. STM32F401xD/xE LQFP64 pinout . . . 35
Figure 13. STM32F401xD/xE LQFP100 pinout . . . 36
Figure 14. STM32F401xD/xE UFBGA100 pinout . . . 37
Figure 15. Memory map . . . 51
Figure 16. Pin loading conditions . . . 55
Figure 17. Input voltage measurement . . . 56
Figure 18. Power supply scheme . . . 57
Figure 19. Current consumption measurement scheme . . . 58
Figure 20. External capacitor C_{EXT} . . . 62
Figure 21. Typical V_{BAT} current consumption (LSE and RTC ON) . . . 71
Figure 22. High-speed external clock source AC timing diagram . . . 77
Figure 23. Low-speed external clock source AC timing diagram . . . 78
Figure 24. Typical application with an 8 MHz crystal . . . 79
Figure 25. Typical application with a 32.768 kHz crystal . . . 80
Figure 26. ACC_{HSI} versus temperature . . . 81
Figure 27. ACC_{LSI} versus temperature . . . 82
Figure 28. PLL output clock waveforms in center spread mode . . . 85
Figure 29. PLL output clock waveforms in down spread mode . . . 85
Figure 30. FT I/O input characteristics . . . 93
Figure 31. I/O AC characteristics definition . . . 96
Figure 32. Recommended NRST pin protection . . . 97
Figure 33. I^2C bus AC waveforms and measurement circuit . . . 99
Figure 34. SPI timing diagram - slave mode and CPHA = 0 . . . 101
Figure 35. SPI timing diagram - slave mode and CPHA = 1(1) . . . 101
Figure 36. SPI timing diagram - master mode(1) . . . 102
Figure 37. I^2S slave timing diagram (Philips protocol)(1) . . . 104
Figure 38. I^2S master timing diagram (Philips protocol)(1) . . . 104
Figure 39. USB OTG FS timings: definition of data signal rise and fall time . . . 106
Figure 40. ADC accuracy characteristics . . . 110
Figure 41. Typical connection diagram using the ADC . . . 110
Figure 42. Power supply and reference decoupling (V_{REF+} not connected to V_{DDA}) . . . 111
Figure 43. Power supply and reference decoupling (V_{REF+} connected to V_{DDA}) . . . 111
Figure 44. SDIO high-speed mode . . . 113
Figure 45. SD default mode . . . 114
Figure 46. WLCSP49 wafer level chip size package outline . . . 116

Figure 47. WLCSP49 0.4 mm pitch wafer level chip size recommended footprint 117
Figure 48. Example of WLCSP49 marking (top view) 118
Figure 49. UFQFPN48, 7 x 7 mm, 0.5 mm pitch, package outline. 119
Figure 50. UFQFPN48 recommended footprint 120
Figure 51. Example of UFQFPN48 marking (top view) 121
Figure 52. LQFP64, 10 x 10 mm, 64-pin low-profile quad flat package outline 122
Figure 53. LQFP64 recommended footprint 123
Figure 54. Example of LQFP64 marking (top view) 124
Figure 55. LQFP100, 14 x 14 mm, 100-pin low-profile quad flat package outline 125
Figure 56. LQFP100 recommended footprint 127
Figure 57. Example of LQPF100 marking (top view) 127
Figure 58. UFBGA100, 7 x 7 mm, 0.50 mm pitch, ultra fine pitch ball grid array package outline. 128
Figure 59. Recommended PCB design rules for pads (0.5 mm-pitch BGA) 129
Figure 60. Example of UFBGA100 marking (top view) 130

1 Introduction

This datasheet provides the description of the STM32F401xD/xE line of microcontrollers.

The STM32F401xD/xE datasheet should be read in conjunction with RM0368 reference manual which is available from the STMicroelectronics website *www.st.com*. It includes all information concerning Flash memory programming.

For information on the Cortex®-M4 core, please refer to the Cortex®-M4 programming manual (PM0214) available from *www.st.com*.

2 Description

The STM32F401xD/xE devices are based on the high-performance ARM® Cortex® -M4 32-bit RISC core operating at a frequency of up to 84 MHz. Its Cortex®-M4 core features a Floating point unit (FPU) single precision which supports all ARM single-precision data-processing instructions and data types. It also implements a full set of DSP instructions and a memory protection unit (MPU) which enhances application security.

The STM32F401xD/xE incorporate high-speed embedded memories (512 Kbytes of Flash memory, 96 Kbytes of SRAM), and an extensive range of enhanced I/Os and peripherals connected to two APB buses, two AHB buses and a 32-bit multi-AHB bus matrix.

All devices offer one 12-bit ADC, a low-power RTC, six general-purpose 16-bit timers including one PWM timer for motor control, two general-purpose 32-bit timers. They also feature standard and advanced communication interfaces.

- Up to three I^2Cs
- Up to four SPIs
- Two full duplex I^2Ss. To achieve audio class accuracy, the I^2S peripherals can be clocked via a dedicated internal audio PLL or via an external clock to allow synchronization.
- Three USARTs
- SDIO interface
- USB 2.0 OTG full speed interface

Refer to for the peripherals available for each part number.

The STM32F401xD/xE operate in the –40 to +105 °C temperature range from a 1.7 (PDR OFF) to 3.6 V power supply. A comprehensive set of power-saving mode allows the design of low-power applications.

These features make the STM32F401xD/xE microcontrollers suitable for a wide range of applications:

- Motor drive and application control
- Medical equipment
- Industrial applications: PLC, inverters, circuit breakers
- Printers, and scanners
- Alarm systems, video intercom, and HVAC
- Home audio appliances
- Mobile phone sensor hub

Figure 3 shows the general block diagram of the devices.

Table 2. STM32F401xD/xE features and peripheral counts

Peripherals		STM32F401xD			STM32F401xE		
Flash memory in Kbytes		384			512		
SRAM in Kbytes	System	96					
Timers	General-purpose	7					
	Advanced-control	1					
Communication interfaces	SPI/ I^2S	3/2 (full duplex)		4/2 (full duplex)	3/2 (full duplex)		4/2 (full duplex)
	I^2C	3					
	USART	3					
	SDIO	-	1		-	1	
USB OTG FS		1					
GPIOs		36	50	81	36	50	81
12-bit ADC		1					
Number of channels		10	16		10	16	
Maximum CPU frequency		84 MHz					
Operating voltage		1.7 to 3.6 V					
Operating temperatures		Ambient temperatures: –40 to +85 °C/–40 to +105 °C					
		Junction temperature: –40 to + 125 °C					
Package		WLCSP49 UFQFPN48	LQFP64	UFBGA100 LQFP100	WLCSP49 UFQFPN48	LQFP64	UFBGA100 LQFP100

2.1 Compatibility with STM32F4 series

The STM32F401xD/xE are fully software and feature compatible with the STM32F4 series (STM32F42x, STM32F43x, STM32F41x, STM32F405 and STM32F407)

The STM32F401xD/xE can be used as drop-in replacement of the other STM32F4 products but some slight changes have to be done on the PCB board.

Figure 1. Compatible board design for LQFP100 package

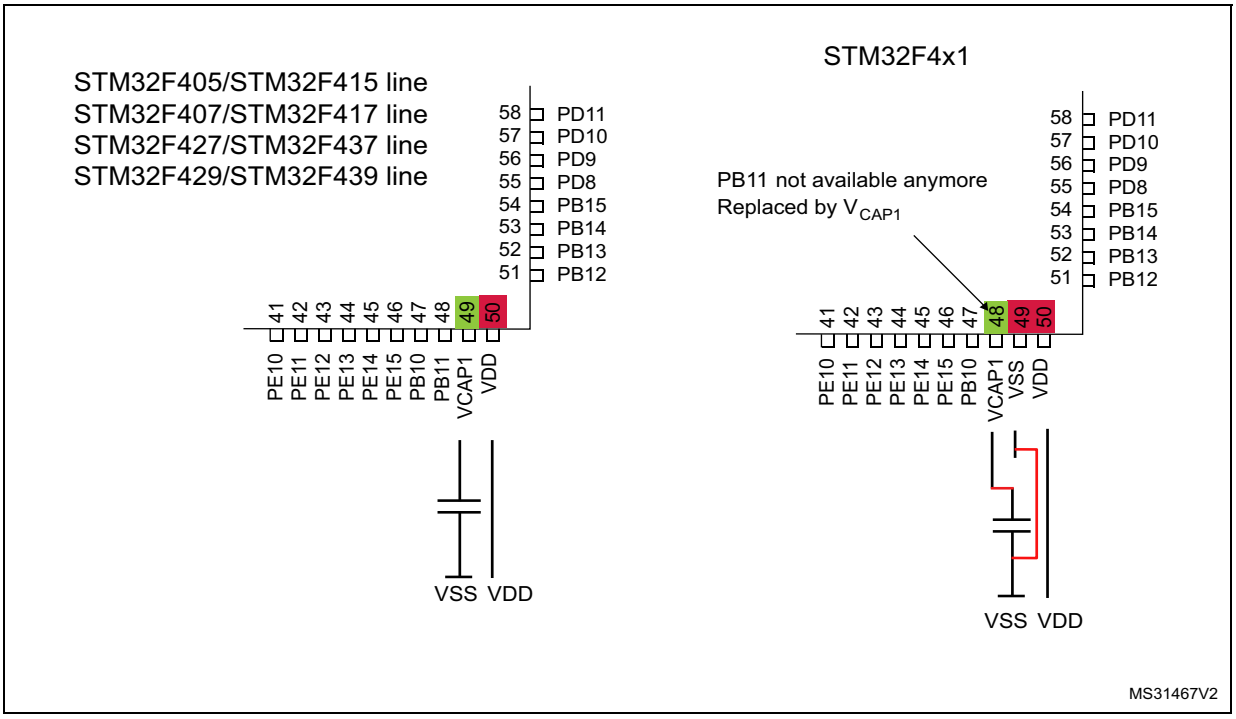

Figure 2. Compatible board design for LQFP64 package

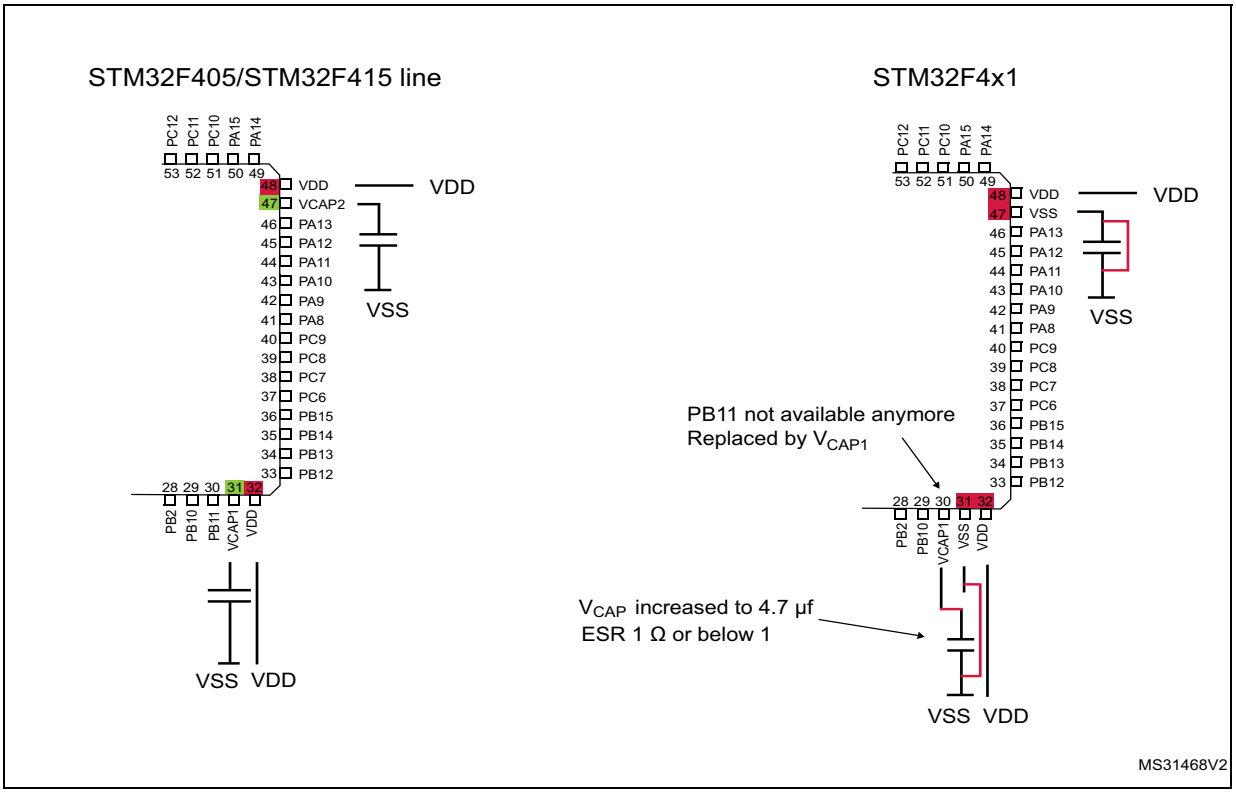

Figure 3. STM32F401xD/xE block diagram

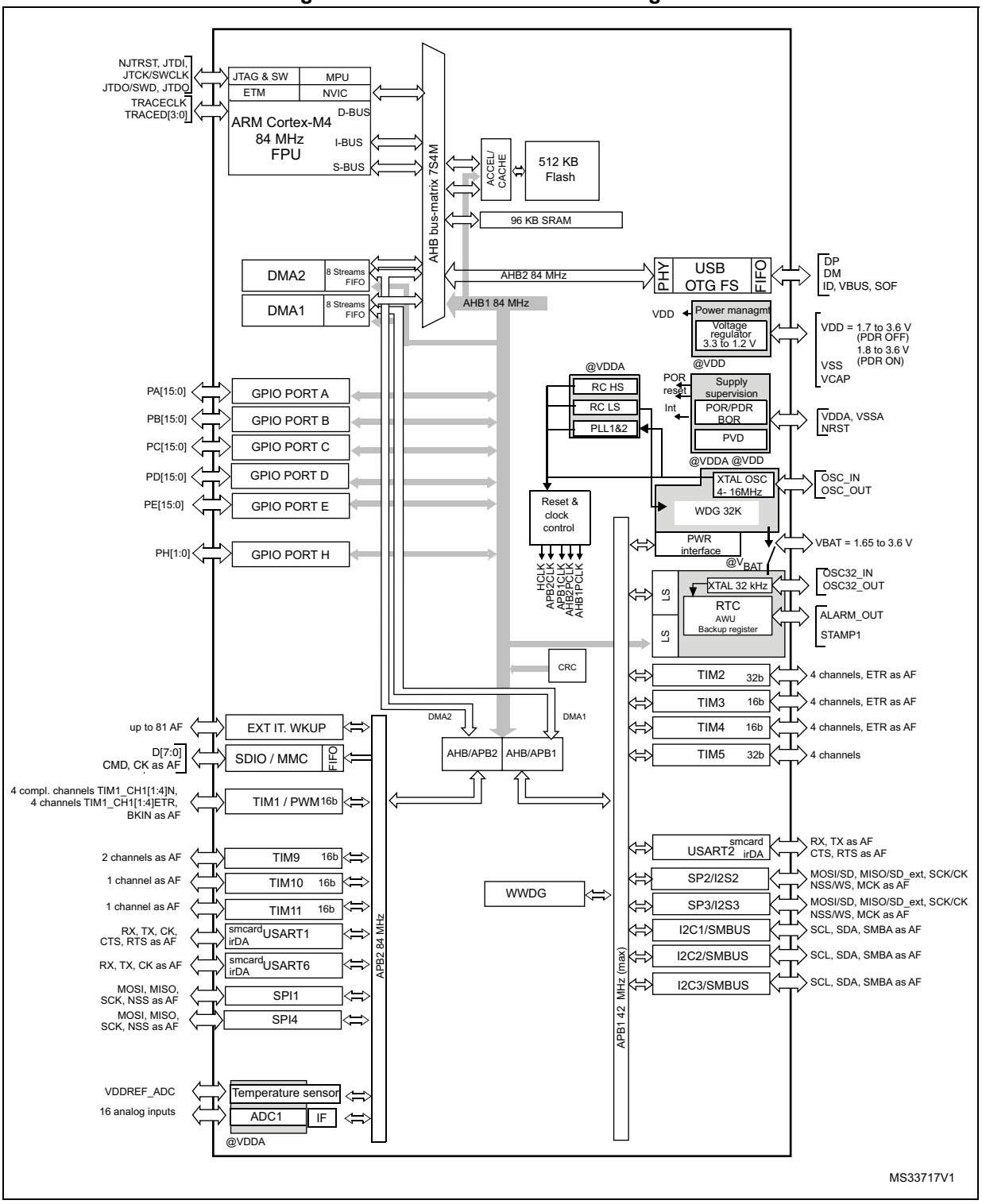

1. The timers connected to APB2 are clocked from TIMxCLK up to 84 MHz, while the timers connected to APB1 are clocked from TIMxCLK up to 42 MHz.

3 Functional overview

3.1 ARM® Cortex®-M4 with FPU core with embedded Flash and SRAM

The ARM® Cortex®-M4 with FPU processor is the latest generation of ARM processors for embedded systems. It was developed to provide a low-cost platform that meets the needs of MCU implementation, with a reduced pin count and low-power consumption, while delivering outstanding computational performance and an advanced response to interrupts.

The ARM® Cortex®-M4 with FPU 32-bit RISC processor features exceptional code-efficiency, delivering the high-performance expected from an ARM core in the memory size usually associated with 8- and 16-bit devices. The processor supports a set of DSP instructions which allow efficient signal processing and complex algorithm execution. Its single precision FPU (floating point unit) speeds up software development by using metalanguage development tools, while avoiding saturation.

The STM32F401xD/xE devices are compatible with all ARM tools and software.

Figure 3 shows the general block diagram of the STM32F401xD/xE.

Note: Cortex®-M4 with FPU is binary compatible with Cortex®-M3.

3.2 Adaptive real-time memory accelerator (ART Accelerator™)

The ART Accelerator™ is a memory accelerator which is optimized for STM32 industry-standard ARM® Cortex®-M4 with FPU processors. It balances the inherent performance advantage of the ARM® Cortex®-M4 with FPU over Flash memory technologies, which normally requires the processor to wait for the Flash memory at higher frequencies.

To release the processor full 105 DMIPS performance at this frequency, the accelerator implements an instruction prefetch queue and branch cache, which increases program execution speed from the 128-bit Flash memory. Based on CoreMark benchmark, the performance achieved thanks to the ART accelerator is equivalent to 0 wait state program execution from Flash memory at a CPU frequency up to 84 MHz.

3.3 Memory protection unit

The memory protection unit (MPU) is used to manage the CPU accesses to memory to prevent one task to accidentally corrupt the memory or resources used by any other active task. This memory area is organized into up to 8 protected areas that can in turn be divided up into 8 subareas. The protection area sizes are between 32 bytes and the whole 4 gigabytes of addressable memory.

The MPU is especially helpful for applications where some critical or certified code has to be protected against the misbehavior of other tasks. It is usually managed by an RTOS (real-time operating system). If a program accesses a memory location that is prohibited by the MPU, the RTOS can detect it and take action. In an RTOS environment, the kernel can dynamically update the MPU area setting, based on the process to be executed.

The MPU is optional and can be bypassed for applications that do not need it.

3.4 Embedded Flash memory

The devices embed 512 Kbytes of Flash memory available for storing programs and data.

3.5 CRC (cyclic redundancy check) calculation unit

The CRC (cyclic redundancy check) calculation unit is used to get a CRC code from a 32-bit data word and a fixed generator polynomial.

Among other applications, CRC-based techniques are used to verify data transmission or storage integrity. In the scope of the EN/IEC 60335-1 standard, they offer a means of verifying the Flash memory integrity. The CRC calculation unit helps compute a software signature during runtime, to be compared with a reference signature generated at link-time and stored at a given memory location.

3.6 Embedded SRAM

All devices embed:

- 96 Kbytes of system SRAM which can be accessed (read/write) at CPU clock speed with 0 wait states

3.7 Multi-AHB bus matrix

The 32-bit multi-AHB bus matrix interconnects all the masters (CPU, DMAs) and the slaves (Flash memory, RAM, AHB and APB peripherals) and ensures a seamless and efficient operation even when several high-speed peripherals work simultaneously.

Figure 4. Multi-AHB matrix

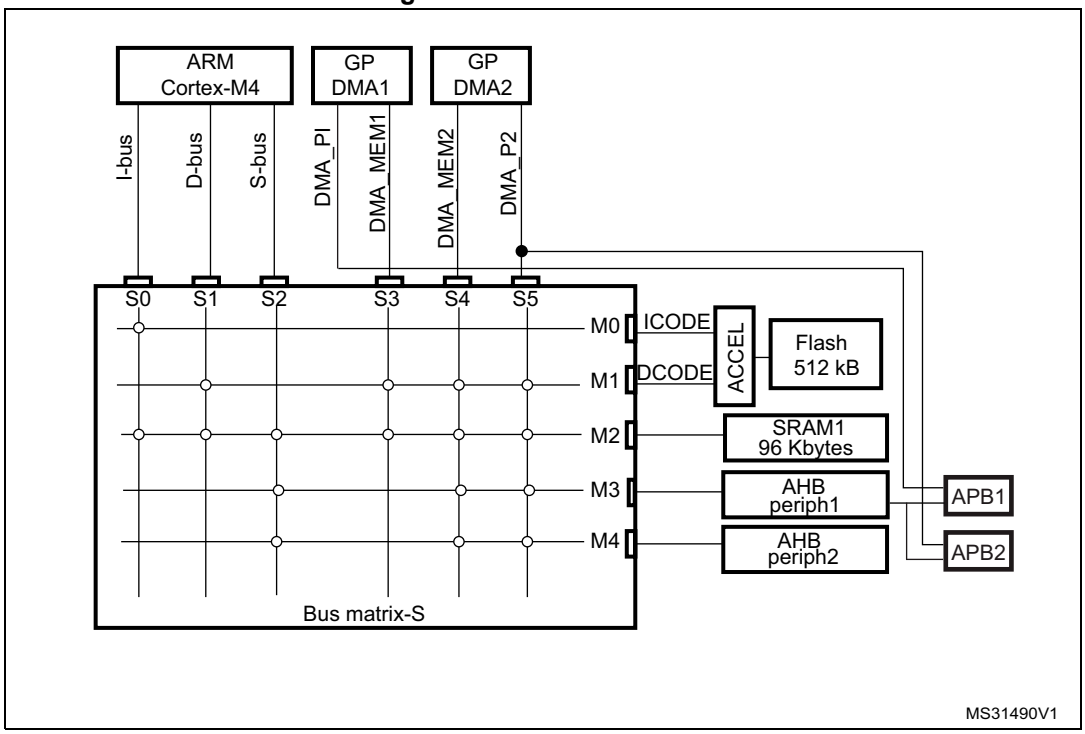

3.8 DMA controller (DMA)

The devices feature two general-purpose dual-port DMAs (DMA1 and DMA2) with 8 streams each. They are able to manage memory-to-memory, peripheral-to-memory and memory-to-peripheral transfers. They feature dedicated FIFOs for APB/AHB peripherals, support burst transfer and are designed to provide the maximum peripheral bandwidth (AHB/APB).

The two DMA controllers support circular buffer management, so that no specific code is needed when the controller reaches the end of the buffer. The two DMA controllers also have a double buffering feature, which automates the use and switching of two memory buffers without requiring any special code.

Each stream is connected to dedicated hardware DMA requests, with support for software trigger on each stream. Configuration is made by software and transfer sizes between source and destination are independent.

The DMA can be used with the main peripherals:

- SPI and I^2S
- I^2C
- USART
- General-purpose, basic and advanced-control timers TIMx
- SD/SDIO/MMC host interface
- ADC

3.9 Nested vectored interrupt controller (NVIC)

The devices embed a nested vectored interrupt controller able to manage 16 priority levels, and handle up to 62 maskable interrupt channels plus the 16 interrupt lines of the Cortex®-M4 with FPU.

- Closely coupled NVIC gives low-latency interrupt processing
- Interrupt entry vector table address passed directly to the core
- Allows early processing of interrupts
- Processing of late arriving, higher-priority interrupts
- Support tail chaining
- Processor state automatically saved
- Interrupt entry restored on interrupt exit with no instruction overhead

This hardware block provides flexible interrupt management features with minimum interrupt latency.

3.10 External interrupt/event controller (EXTI)

The external interrupt/event controller consists of 21 edge-detector lines used to generate interrupt/event requests. Each line can be independently configured to select the trigger event (rising edge, falling edge, both) and can be masked independently. A pending register maintains the status of the interrupt requests. The EXTI can detect an external line with a pulse width shorter than the Internal APB2 clock period. Up to 81 GPIOs can be connected to the 16 external interrupt lines.

3.11 Clocks and startup

On reset the 16 MHz internal RC oscillator is selected as the default CPU clock. The 16 MHz internal RC oscillator is factory-trimmed to offer 1% accuracy at 25 °C. The application can then select as system clock either the RC oscillator or an external 4-26 MHz clock source. This clock can be monitored for failure. If a failure is detected, the system automatically switches back to the internal RC oscillator and a software interrupt is generated (if enabled). This clock source is input to a PLL thus allowing to increase the frequency up to 84 MHz. Similarly, full interrupt management of the PLL clock entry is available when necessary (for example if an indirectly used external oscillator fails).

Several prescalers allow the configuration of the two AHB buses, the high-speed APB (APB2) and the low-speed APB (APB1) domains. The maximum frequency of the two AHB buses is 84 MHz while the maximum frequency of the high-speed APB domains is 84 MHz. The maximum allowed frequency of the low-speed APB domain is 42 MHz.

The devices embed a dedicated PLL (PLLI2S) which allows to achieve audio class performance. In this case, the I^2S master clock can generate all standard sampling frequencies from 8 kHz to 192 kHz.

3.12 Boot modes

At startup, boot pins are used to select one out of three boot options:

- Boot from user Flash
- Boot from system memory
- Boot from embedded SRAM

The boot loader is located in system memory. It is used to reprogram the Flash memory by using either USART1(PA9/10), USART2(PD5/6), USB OTG FS in device mode (PA11/12) through DFU (device firmware upgrade), I2C1(PB6/7), I2C2(PB10/3), I2C3(PA8/PB4), SPI1(PA4/5/6/7), SPI2(PB12/13/14/15) or SPI3(PA15, PC10/11/12).

For more detailed information on the bootloader, refer to Application Note: AN2606, *STM32™ microcontroller system memory boot mode*.

3.13 Power supply schemes

- V_{DD} = 1.7 to 3.6 V: external power supply for I/Os with the internal supervisor (POR/PDR) disabled, provided externally through V_{DD} pins. Requires the use of an external power supply supervisor connected to the VDD and PDR_ON pins.
- V_{DD} = 1.8 to 3.6 V: external power supply for I/Os and the internal regulator (when enabled), provided externally through V_{DD} pins.
- V_{SSA}, V_{DDA} = 1.7 to 3.6 V: external analog power supplies for ADC, Reset blocks, RCs and PLL. V_{DDA} and V_{SSA} must be connected to V_{DD} and V_{SS}, respectively, with decoupling technique.
- V_{BAT} = 1.65 to 3.6 V: power supply for RTC, external clock 32 kHz oscillator and backup registers (through power switch) when V_{DD} is not present.

Refer to *Figure 18: Power supply scheme* for more details.

3.14 Power supply supervisor

3.14.1 Internal reset ON

This feature is available for V_{DD} operating voltage range 1.8 V to 3.6 V.

The internal power supply supervisor is enabled by holding PDR_ON high.

The device has an integrated power-on reset (POR) / power-down reset (PDR) circuitry coupled with a Brownout reset (BOR) circuitry. At power-on, POR is always active, and ensures proper operation starting from 1.8 V. After the 1.8 V POR threshold level is reached, the option byte loading process starts, either to confirm or modify default thresholds, or to disable BOR permanently. Three BOR thresholds are available through option bytes.

The device remains in reset mode when V_{DD} is below a specified threshold, $V_{POR/PDR}$ or V_{BOR}, without the need for an external reset circuit.

The device also features an embedded programmable voltage detector (PVD) that monitors the V_{DD}/V_{DDA} power supply and compares it to the V_{PVD} threshold. An interrupt can be generated when V_{DD}/V_{DDA} drops below the V_{PVD} threshold and/or when V_{DD}/V_{DDA} is higher than the V_{PVD} threshold. The interrupt service routine can then generate a warning message and/or put the MCU into a safe state. The PVD is enabled by software.

3.14.2 Internal reset OFF

This feature is available only on packages featuring the PDR_ON pin. The internal power-on reset (POR) / power-down reset (PDR) circuitry is disabled by setting the PDR_ON pin to low.

An external power supply supervisor should monitor V_{DD} and should maintain the device in reset mode as long as V_{DD} is below a specified threshold. PDR_ON should be connected to this external power supply supervisor. Refer to *Figure 5: Power supply supervisor interconnection with internal reset OFF*.

Figure 5. Power supply supervisor interconnection with internal reset OFF(1)

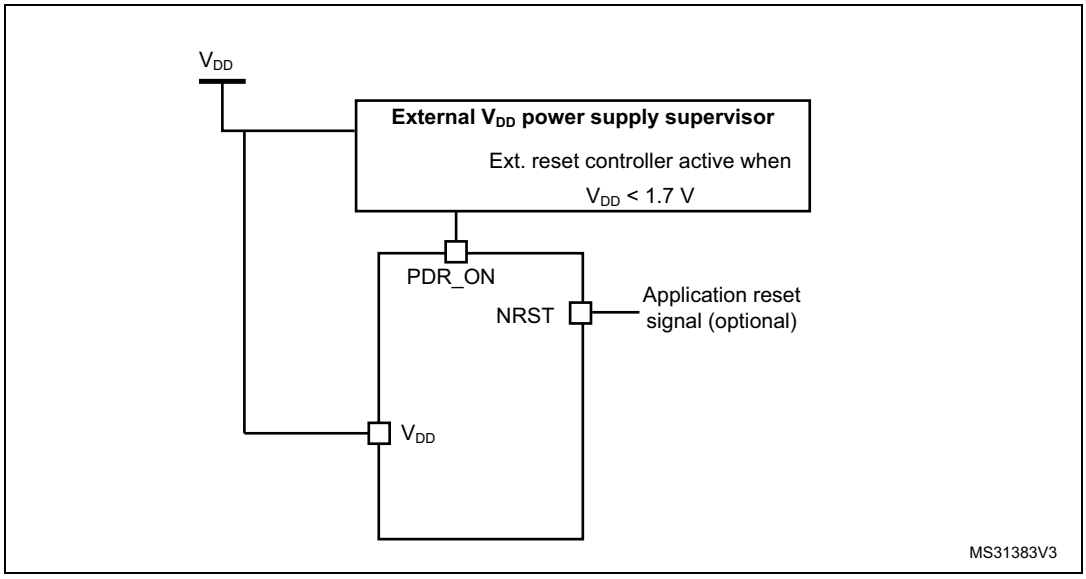

1. The PRD_ON pin is only available in the WLCSP49 and UFBGA100 packages.

The V_{DD} specified threshold, below which the device must be maintained under reset, is 1.7 V (see *Figure 6*).

A comprehensive set of power-saving mode allows to design low-power applications.

When the internal reset is OFF, the following integrated features are no longer supported:

- The integrated power-on reset (POR) / power-down reset (PDR) circuitry is disabled.
- The brownout reset (BOR) circuitry must be disabled.
- The embedded programmable voltage detector (PVD) is disabled.
- V_{BAT} functionality is no more available and VBAT pin should be connected to V_{DD}.

Figure 6. PDR_ON control with internal reset OFF

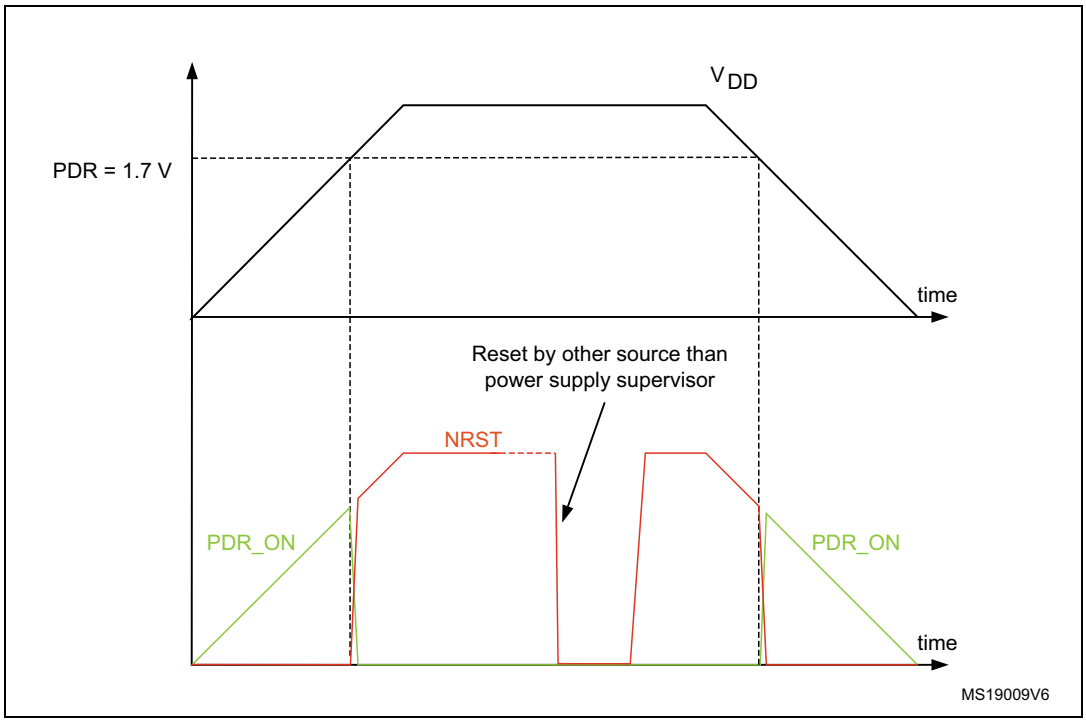

3.15 Voltage regulator

The regulator has four operating modes:

- Regulator ON
  - Main regulator mode (MR)
  - Low power regulator (LPR)
  - Power-down
- Regulator OFF

3.15.1 Regulator ON

On packages embedding the BYPASS_REG pin, the regulator is enabled by holding BYPASS_REG low. On all other packages, the regulator is always enabled.

There are three power modes configured by software when the regulator is ON:

- MR is used in the nominal regulation mode (With different voltage scaling in Run)

  In Main regulator mode (MR mode), different voltage scaling are provided to reach the best compromise between maximum frequency and dynamic power consumption.
- LPR is used in the Stop modes

  The LP regulator mode is configured by software when entering Stop mode.
- Power-down is used in Standby mode.

  The Power-down mode is activated only when entering in Standby mode. The regulator output is in high impedance and the kernel circuitry is powered down, inducing zero consumption. The contents of the registers and SRAM are lost.

Depending on the package, one or two external ceramic capacitors should be connected on the V_{CAP_1} and V_{CAP_2} pins. The V_{CAP_2} pin is only available for the LQFP100 and UFBGA100 packages.

All packages have the regulator ON feature.

3.15.2 Regulator OFF

The Regulator OFF is available only on the UFBGA100, which features the BYPASS_REG pin. The regulator is disabled by holding BYPASS_REG high. The regulator OFF mode allows to supply externally a V12 voltage source through V_{CAP_1} and V_{CAP_2} pins.

Since the internal voltage scaling is not managed internally, the external voltage value must be aligned with the targeted maximum frequency. Refer to *Table 14: General operating conditions*.

The two 2.2 µF V_{CAP} ceramic capacitors should be replaced by two 100 nF decoupling capacitors. Refer to *Figure 18: Power supply scheme*.

When the regulator is OFF, there is no more internal monitoring on V12. An external power supply supervisor should be used to monitor the V12 of the logic power domain. PA0 pin should be used for this purpose, and act as power-on reset on V12 power domain.

In regulator OFF mode, the following features are no more supported:

- PA0 cannot be used as a GPIO pin since it allows to reset a part of the V12 logic power domain which is not reset by the NRST pin.
- As long as PA0 is kept low, the debug mode cannot be used under power-on reset. As a consequence, PA0 and NRST pins must be managed separately if the debug connection under reset or pre-reset is required.

Figure 7. Regulator OFF

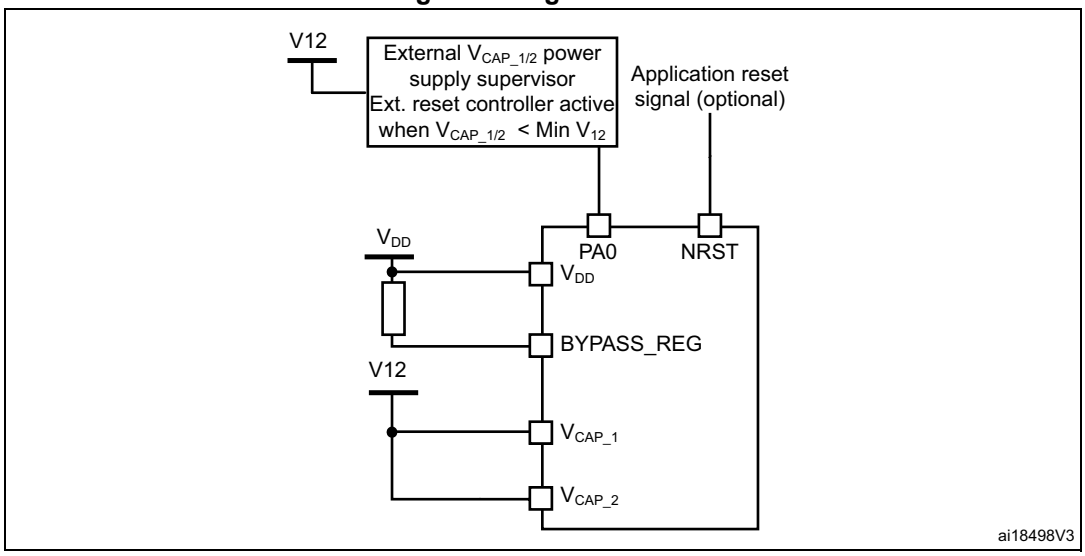

The following conditions must be respected:

- V_{DD} should always be higher than V_{CAP_1} and V_{CAP_2} to avoid current injection between power domains.
- If the time for V_{CAP_1} and V_{CAP_2} to reach V_{12} minimum value is faster than the time for V_{DD} to reach 1.7 V, then PA0 should be kept low to cover both conditions: until V_{CAP_1} and V_{CAP_2} reach V_{12} minimum value and until V_{DD} reaches 1.7 V (see *Figure 8*).
- Otherwise, if the time for V_{CAP_1} and V_{CAP_2} to reach V_{12} minimum value is slower than the time for V_{DD} to reach 1.7 V, then PA0 could be asserted low externally (see *Figure 9*).
- If V_{CAP_1} and V_{CAP_2} go below V_{12} minimum value and V_{DD} is higher than 1.7 V, then a reset must be asserted on PA0 pin.

Note: The minimum value of V_{12} depends on the maximum frequency targeted in the application

Figure 8. Startup in regulator OFF: slow V_{DD} slope - power-down reset risen after V_{CAP_1}/V_{CAP_2} stabilization

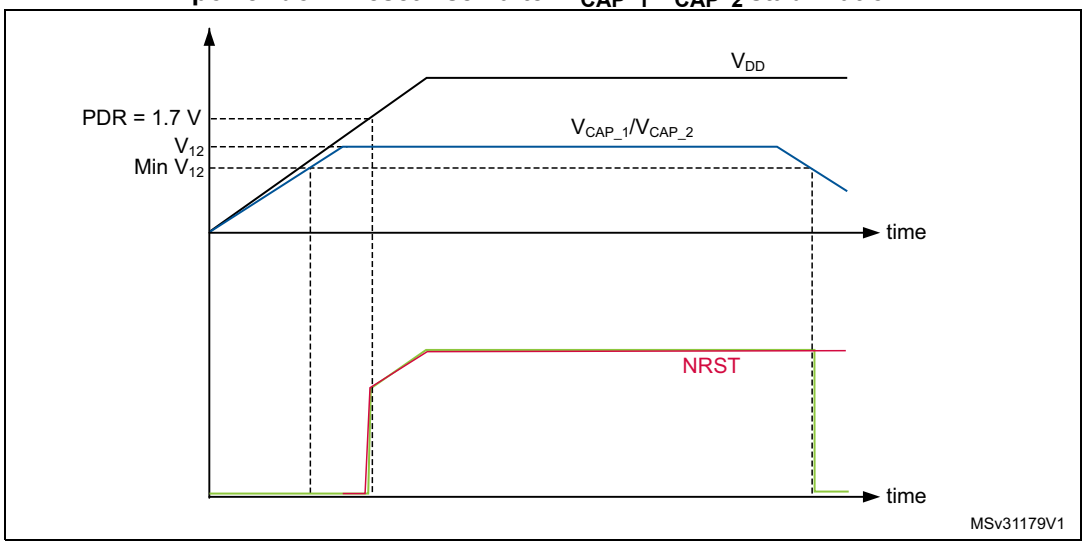

1. This figure is valid whatever the internal reset mode (ON or OFF).

Figure 9. Startup in regulator OFF mode: fast V_{DD} slope - power-down reset risen before V_{CAP_1}/V_{CAP_2} stabilization

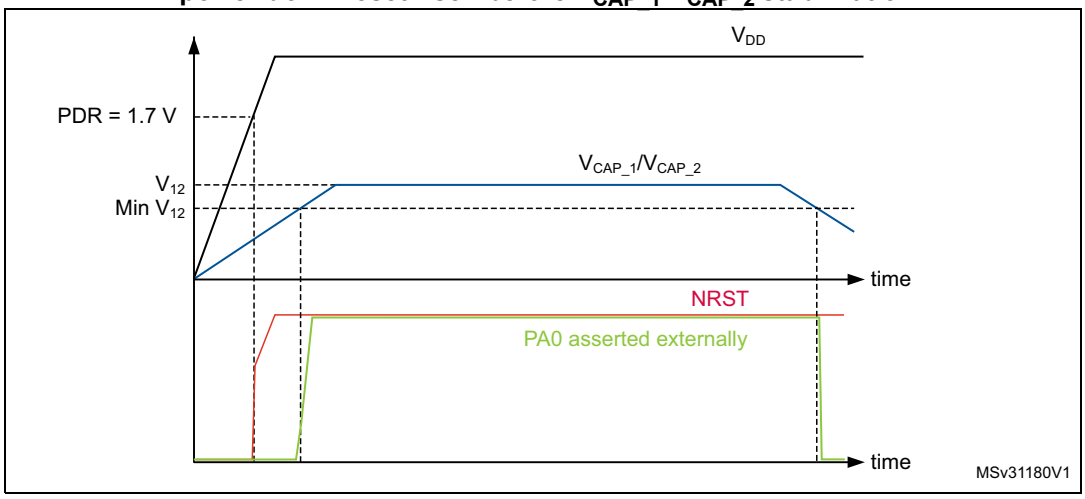

1. This figure is valid whatever the internal reset mode (ON or OFF).

3.15.3 Regulator ON/OFF and internal power supply supervisor availability

Table 3. Regulator ON/OFF and internal power supply supervisor availability

Package	Regulator ON	Regulator OFF	Power supply supervisor ON	Power supply supervisor OFF
UFQFPN48	Yes	No	Yes	No
WLCSP49	Yes	No	Yes PDR_ON set to VDD	Yes PDR_ON external control(1)
LQFP64	Yes	No	Yes	No
LQFP100	Yes	No	Yes	No
UFBGA100	Yes BYPASS_REG set to VSS	Yes BYPASS_REG set to VDD	Yes PDR_ON set to VDD	Yes PDR_ON external control (1)

1. Refer to *Section 3.14: Power supply supervisor*

3.16 Real-time clock (RTC) and backup registers

The backup domain includes:

- The real-time clock (RTC)
- 20 backup registers

The real-time clock (RTC) is an independent BCD timer/counter. Dedicated registers contain the second, minute, hour (in 12/24 hour), week day, date, month, year, in BCD (binary-coded decimal) format. Correction for 28, 29 (leap year), 30, and 31 day of the month are performed automatically. The RTC features a reference clock detection, a more precise second source clock (50 or 60 Hz) can be used to enhance the calendar precision. The RTC provides a programmable alarm and programmable periodic interrupts with wakeup from Stop and Standby modes. The sub-seconds value is also available in binary format.

It is clocked by a 32.768 kHz external crystal, resonator or oscillator, the internal low-power RC oscillator or the high-speed external clock divided by 128. The internal low-speed RC has a typical frequency of 32 kHz. The RTC can be calibrated using an external 512 Hz output to compensate for any natural quartz deviation.

Two alarm registers are used to generate an alarm at a specific time and calendar fields can be independently masked for alarm comparison. To generate a periodic interrupt, a 16-bit programmable binary auto-reload downcounter with programmable resolution is available and allows automatic wakeup and periodic alarms from every 120 µs to every 36 hours.

A 20-bit prescaler is used for the time base clock. It is by default configured to generate a time base of 1 second from a clock at 32.768 kHz.

The backup registers are 32-bit registers used to store 80 bytes of user application data when V_{DD} power is not present. Backup registers are not reset by a system, a power reset, or when the device wakes up from the Standby mode (see *Section 3.17: Low-power modes*).

Additional 32-bit registers contain the programmable alarm subseconds, seconds, minutes, hours, day, and date.

The RTC and backup registers are supplied through a switch that is powered either from the V_{DD} supply when present or from the V_{BAT} pin.

3.17 Low-power modes

The devices support three low-power modes to achieve the best compromise between low power consumption, short startup time and available wakeup sources:

- **Sleep mode**

  In Sleep mode, only the CPU is stopped. All peripherals continue to operate and can wake up the CPU when an interrupt/event occurs.

- **Stop mode**

  The Stop mode achieves the lowest power consumption while retaining the contents of SRAM and registers. All clocks in the 1.2 V domain are stopped, the PLL, the HSI RC and the HSE crystal oscillators are disabled. The voltage regulator can also be put either in normal or in low-power mode.

  The device can be woken up from the Stop mode by any of the EXTI line (the EXTI line source can be one of the 16 external lines, the PVD output, the RTC alarm/ wakeup/ tamper/ time stamp events).

- **Standby mode**

  The Standby mode is used to achieve the lowest power consumption. The internal voltage regulator is switched off so that the entire 1.2 V domain is powered off. The PLL, the HSI RC and the HSE crystal oscillators are also switched off. After entering Standby mode, the SRAM and register contents are lost except for registers in the backup domain when selected.

  The device exits the Standby mode when an external reset (NRST pin), an IWDG reset, a rising edge on the WKUP pin, or an RTC alarm/ wakeup/ tamper/time stamp event occurs.

  Standby mode is not supported when the embedded voltage regulator is bypassed and the 1.2 V domain is controlled by an external power.

3.18 V_{BAT} operation

The VBAT pin allows to power the device V_{BAT} domain from an external battery, an external super-capacitor, or from V_{DD} when no external battery and an external super-capacitor are present.

V_{BAT} operation is activated when V_{DD} is not present.

The VBAT pin supplies the RTC and the backup registers.

Note: When the microcontroller is supplied from VBAT, external interrupts and RTC alarm/events do not exit it from V_{BAT} operation. When PDR_ON pin is not connected to V_{DD} (internal Reset OFF), the V_{BAT} functionality is no more available and VBAT pin should be connected to V_{DD}.

3.19 Timers and watchdogs

The devices embed one advanced-control timer, seven general-purpose timers and two watchdog timers.

All timer counters can be frozen in debug mode.

Table 4 compares the features of the advanced-control and general-purpose timers.

Table 4. Timer feature comparison

Timer type	Timer	Counter resolution	Counter type	Prescaler factor	DMA request generation	Capture/ compare channels	Complementary output	Max. interface clock (MHz)	Max. timer clock (MHz)
Advanced-control	TIM1	16-bit	Up, Down, Up/down	Any integer between 1 and 65536	Yes	4	Yes	84	84
General purpose	TIM2, TIM5	32-bit	Up, Down, Up/down	Any integer between 1 and 65536	Yes	4	No	42	84
	TIM3, TIM4	16-bit	Up, Down, Up/down	Any integer between 1 and 65536	Yes	4	No	42	84
	TIM9	16-bit	Up	Any integer between 1 and 65536	No	2	No	84	84
	TIM10, TIM11	16-bit	Up	Any integer between 1 and 65536	No	1	No	84	84

3.19.1 Advanced-control timers (TIM1)

The advanced-control timer (TIM1) can be seen as three-phase PWM generators multiplexed on 4 independent channels. It has complementary PWM outputs with programmable inserted dead times. It can also be considered as a complete general-purpose timer. Its 4 independent channels can be used for:

- Input capture
- Output compare
- PWM generation (edge- or center-aligned modes)
- One-pulse mode output

If configured as standard 16-bit timers, it has the same features as the general-purpose TIMx timers. If configured as a 16-bit PWM generator, it has full modulation capability (0-100%).

The advanced-control timer can work together with the TIMx timers via the Timer Link feature for synchronization or event chaining.

TIM1 supports independent DMA request generation.

3.19.2 General-purpose timers (TIMx)

There are seven synchronizable general-purpose timers embedded in the STM32F401xD/xE (see *Table 4* for differences).

- **TIM2, TIM3, TIM4, TIM5**

  The STM32F401xD/xE devices are 4 full-featured general-purpose timers: TIM2, TIM5, TIM3, and TIM4.The TIM2 and TIM5 timers are based on a 32-bit auto-reload up/downcounter and a 16-bit prescaler. The TIM3 and TIM4 timers are based on a 16-bit auto-reload up/downcounter and a 16-bit prescaler. They all feature four independent channels for input capture/output compare, PWM or one-pulse mode output. This gives up to 15 input capture/output compare/PWMs.

  The TIM2, TIM3, TIM4, TIM5 general-purpose timers can work together, or with the other general-purpose timers and the advanced-control timers TIM1 and TIM8 via the Timer Link feature for synchronization or event chaining.

  Any of these general-purpose timers can be used to generate PWM outputs.

  TIM2, TIM3, TIM4, TIM5 all have independent DMA request generation. They are capable of handling quadrature (incremental) encoder signals and the digital outputs from 1 to 4 hall-effect sensors.

- **TIM9, TIM10 and TIM11**

  These timers are based on a 16-bit auto-reload upcounter and a 16-bit prescaler. TIM10 and TIM11 feature one independent channel, whereas TIM9 has two independent channels for input capture/output compare, PWM or one-pulse mode output. They can be synchronized with the TIM2, TIM3, TIM4, TIM5 full-featured general-purpose timers. They can also be used as simple time bases.

3.19.3 Independent watchdog

The independent watchdog is based on a 12-bit downcounter and 8-bit prescaler. It is clocked from an independent 32 kHz internal RC and as it operates independently from the main clock, it can operate in Stop and Standby modes. It can be used either as a watchdog to reset the device when a problem occurs, or as a free-running timer for application timeout management. It is hardware- or software-configurable through the option bytes.

3.19.4 Window watchdog

The window watchdog is based on a 7-bit downcounter that can be set as free-running. It can be used as a watchdog to reset the device when a problem occurs. It is clocked from the main clock. It has an early warning interrupt capability and the counter can be frozen in debug mode.

3.19.5 SysTick timer

This timer is dedicated to real-time operating systems, but could also be used as a standard downcounter. It features:

- A 24-bit downcounter
- Autoreload capability
- Maskable system interrupt generation when the counter reaches 0
- Programmable clock source.

3.20 Inter-integrated circuit interface (I^2C)

Up to three I^2C bus interfaces can operate in multimaster and slave modes. They can support the standard (up to 100 kHz) and fast (up to 400 kHz) modes. The I2C bus frequency can be increased up to 1 MHz. For more details about the complete solution, please contact your local ST sales representative.They also support the 7/10-bit addressing mode and the 7-bit dual addressing mode (as slave). A hardware CRC generation/verification is embedded.

They can be served by DMA and they support SMBus 2.0/PMBus.

The devices also include programmable analog and digital noise filters (see *Table 5*).

Table 5. Comparison of I2C analog and digital filters

	Analog filter	Digital filter
Pulse width of suppressed spikes	≥ 50 ns	Programmable length from 1 to 15 I2C peripheral clocks

3.21 Universal synchronous/asynchronous receiver transmitters (USART)

The devices embed three universal synchronous/asynchronous receiver transmitters (USART1, USART2 and USART6).

These three interfaces provide asynchronous communication, IrDA SIR ENDEC support, multiprocessor communication mode, single-wire half-duplex communication mode and have LIN Master/Slave capability. The USART1 and USART6 interfaces are able to communicate at speeds of up to 10.5 Mbit/s. The USART2 interface communicates at up to 5.25 bit/s.

USART1 and USART2 also provide hardware management of the CTS and RTS signals, Smart Card mode (ISO 7816 compliant) and SPI-like communication capability. All interfaces can be served by the DMA controller.

Table 6. USART feature comparison

USART name	Standard features	Modem (RTS/CTS)	LIN	SPI master	irDA	Smartcard (ISO 7816)	Max. baud rate in Mbit/s (oversampling by 16)	Max. baud rate in Mbit/s (oversampling by 8)	APB mapping
USART1	X	X	X	X	X	X	5.25	10.5	APB2 (max. 84 MHz)
USART2	X	X	X	X	X	X	2.62	5.25	APB1 (max. 42 MHz)
USART6	X	N.A	X	X	X	X	5.25	10.5	APB2 (max. 84 MHz)

3.22 Serial peripheral interface (SPI)

The devices feature up to four SPIs in slave and master modes in full-duplex and simplex communication modes. SPI1 and SPI4 can communicate at up to 42 Mbit/s, SPI2 and SPI3 can communicate at up to 21 Mbit/s. The 3-bit prescaler gives 8 master mode frequencies and the frame is configurable to 8 bits or 16 bits. The hardware CRC generation/verification supports basic SD Card/MMC modes. All SPIs can be served by the DMA controller.

The SPI interface can be configured to operate in TI mode for communications in master mode and slave mode.

3.23 Inter-integrated sound (I^2S)

Two standard I^2S interfaces (multiplexed with SPI2 and SPI3) are available. They can be operated in master or slave mode, in full duplex and simplex communication modes and can be configured to operate with a 16-/32-bit resolution as an input or output channel. Audio sampling frequencies from 8 kHz up to 192 kHz are supported. When either or both of the I^2S interfaces is/are configured in master mode, the master clock can be output to the external DAC/CODEC at 256 times the sampling frequency.

All I^2Sx can be served by the DMA controller.

3.24 Audio PLL (PLLI2S)

The devices feature an additional dedicated PLL for audio I^2S application. It allows to achieve error-free I^2S sampling clock accuracy without compromising on the CPU performance.

The PLLI2S configuration can be modified to manage an I^2S sample rate change without disabling the main PLL (PLL) used for the CPU.

The audio PLL can be programmed with very low error to obtain sampling rates ranging from 8 kHz to 192 kHz.

In addition to the audio PLL, a master clock input pin can be used to synchronize the I2S flow with an external PLL (or Codec output).

3.25 Secure digital input/output interface (SDIO)

An SD/SDIO/MMC host interface is available, that supports MultiMediaCard System Specification Version 4.2 in three different databus modes: 1-bit (default), 4-bit and 8-bit.

The interface allows data transfer at up to 48 MHz, and is compliant with the SD Memory Card Specification Version 2.0.

The SDIO Card Specification Version 2.0 is also supported with two different databus modes: 1-bit (default) and 4-bit.

The current version supports only one SD/SDIO/MMC4.2 card at any one time and a stack of MMC4.1 or previous.

In addition to SD/SDIO/MMC, this interface is fully compliant with the CE-ATA digital protocol Rev1.1.

3.26 Universal serial bus on-the-go full-speed (OTG_FS)

The devices embed an USB OTG full-speed device/host/OTG peripheral with integrated transceivers. The USB OTG FS peripheral is compliant with the USB 2.0 specification and with the OTG 1.0 specification. It has software-configurable endpoint setting and supports suspend/resume. The USB OTG full-speed controller requires a dedicated 48 MHz clock that is generated by a PLL connected to the HSE oscillator. The major features are:

- Combined Rx and Tx FIFO size of 320 × 35 bits with dynamic FIFO sizing
- Supports the session request protocol (SRP) and host negotiation protocol (HNP)
- 4 bidirectional endpoints
- 8 host channels with periodic OUT support
- HNP/SNP/IP inside (no need for any external resistor)
- For OTG/Host modes, a power switch is needed in case bus-powered devices are connected

3.27 General-purpose input/outputs (GPIOs)

Each of the GPIO pins can be configured by software as output (push-pull or open-drain, with or without pull-up or pull-down), as input (floating, with or without pull-up or pull-down) or as peripheral alternate function. Most of the GPIO pins are shared with digital or analog alternate functions. All GPIOs are high-current-capable and have speed selection to better manage internal noise, power consumption and electromagnetic emission.

The I/O configuration can be locked if needed by following a specific sequence in order to avoid spurious writing to the I/Os registers.

Fast I/O handling allowing maximum I/O toggling up to 84 MHz.

3.28 Analog-to-digital converter (ADC)

One 12-bit analog-to-digital converter is embedded and shares up to 16 external channels, performing conversions in the single-shot or scan mode. In scan mode, automatic conversion is performed on a selected group of analog inputs.

The ADC can be served by the DMA controller. An analog watchdog feature allows very precise monitoring of the converted voltage of one, some or all selected channels. An interrupt is generated when the converted voltage is outside the programmed thresholds.

To synchronize A/D conversion and timers, the ADCs could be triggered by any of TIM1, TIM2, TIM3, TIM4 or TIM5 timer.

3.29 Temperature sensor

The temperature sensor has to generate a voltage that varies linearly with temperature. The conversion range is between 1.7 V and 3.6 V. The temperature sensor is internally connected to the ADC_IN16 input channel which is used to convert the sensor output voltage into a digital value. Refer to the reference manual for additional information.

As the offset of the temperature sensor varies from chip to chip due to process variation, the internal temperature sensor is mainly suitable for applications that detect temperature changes instead of absolute temperatures. If an accurate temperature reading is needed, then an external temperature sensor part should be used.

3.30 Serial wire JTAG debug port (SWJ-DP)

The ARM SWJ-DP interface is embedded, and is a combined JTAG and serial wire debug port that enables either a serial wire debug or a JTAG probe to be connected to the target.

Debug is performed using 2 pins only instead of 5 required by the JTAG (JTAG pins could be re-use as GPIO with alternate function): the JTAG TMS and TCK pins are shared with SWDIO and SWCLK, respectively, and a specific sequence on the TMS pin is used to switch between JTAG-DP and SW-DP.

3.31 Embedded Trace Macrocell™

The ARM Embedded Trace Macrocell provides a greater visibility of the instruction and data flow inside the CPU core by streaming compressed data at a very high rate from the STM32F401xD/xE through a small number of ETM pins to an external hardware trace port analyzer (TPA) device. The TPA is connected to a host computer using any high-speed channel available. Real-time instruction and data flow activity can be recorded and then formatted for display on the host computer that runs the debugger software. TPA hardware is commercially available from common development tool vendors.

The Embedded Trace Macrocell operates with third party debugger software tools.

4 Pinouts and pin description

Figure 10. STM32F401xD/xE WLCSP49 pinout

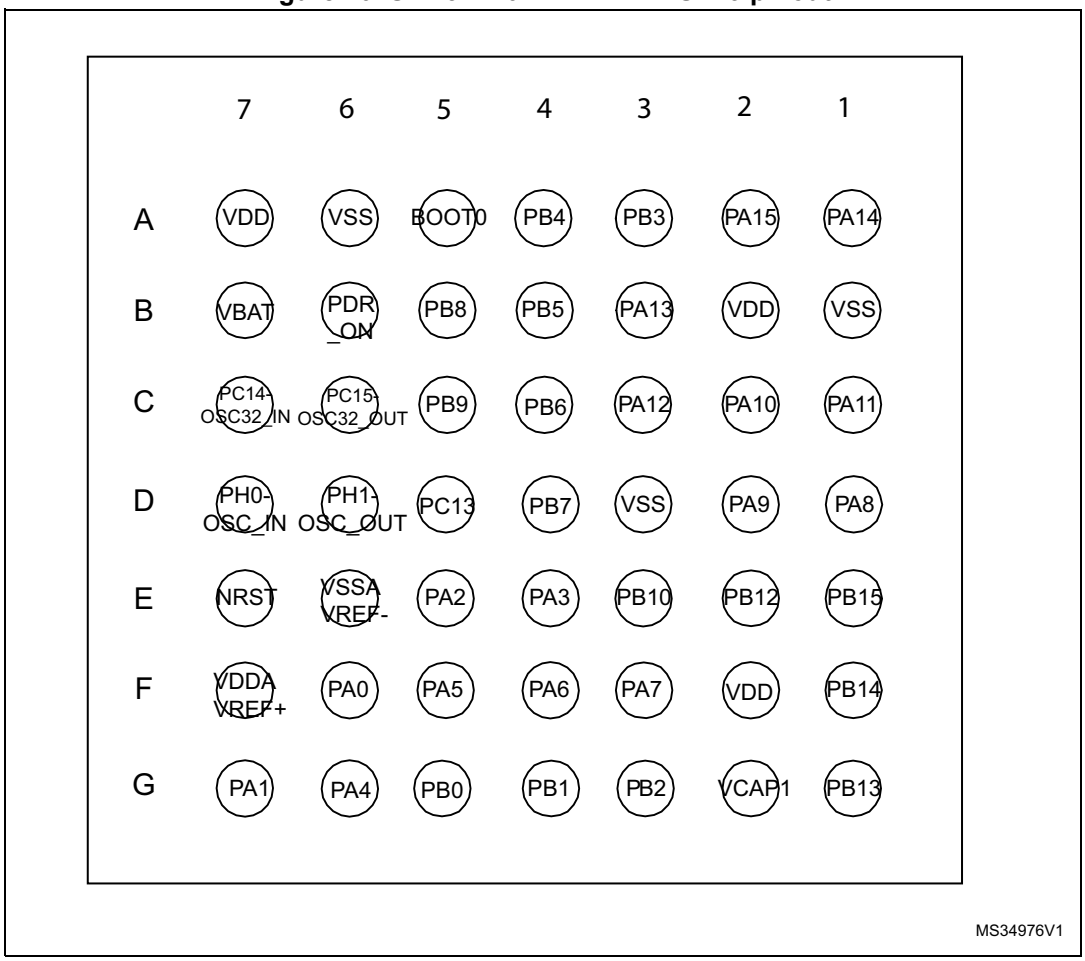

1. The above figure shows the package bump side.

Figure 11. STM32F401xD/xE UFQFPN48 pinout

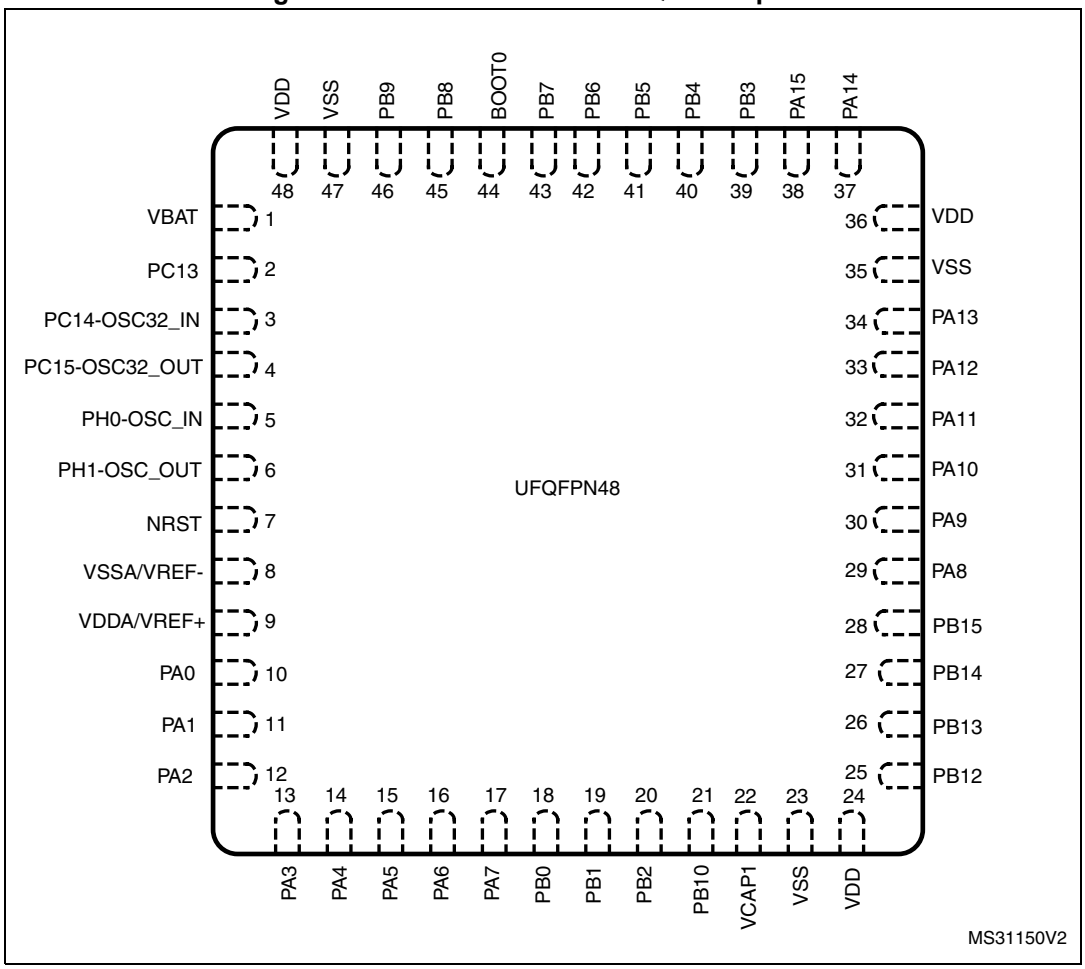

1. The above figure shows the package top view.

Figure 12. STM32F401xD/xE LQFP64 pinout

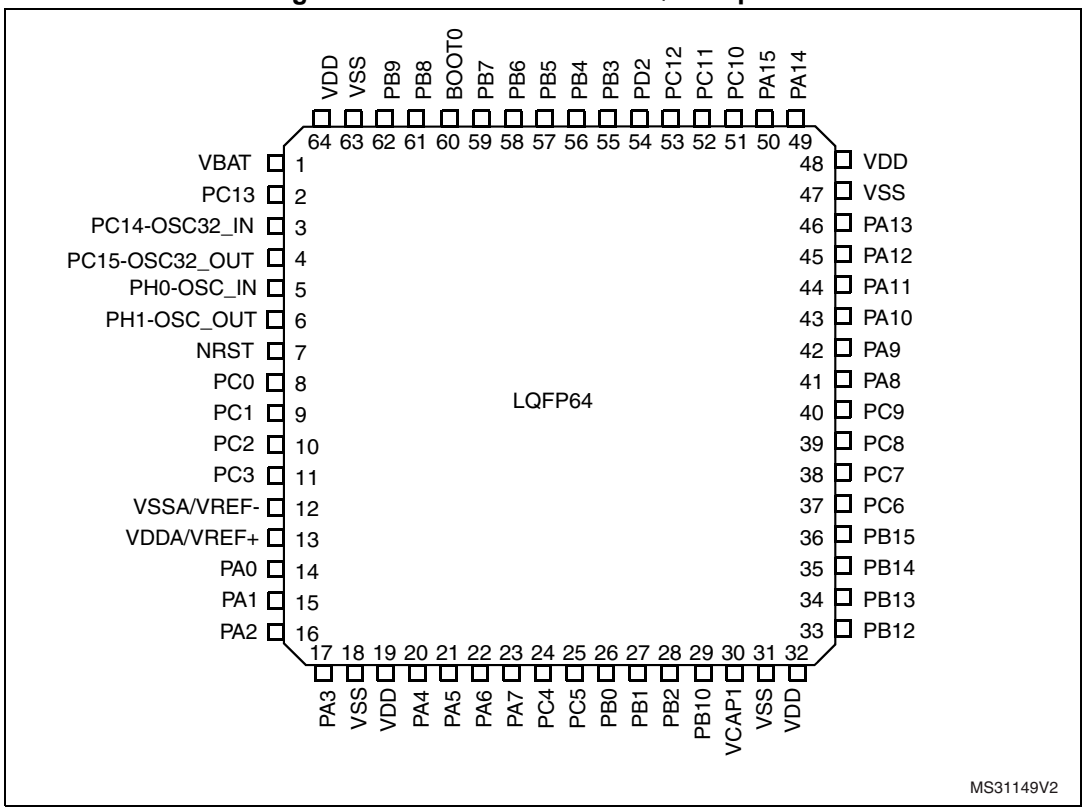

1. The above figure shows the package top view.

Figure 13. STM32F401xD/xE LQFP100 pinout

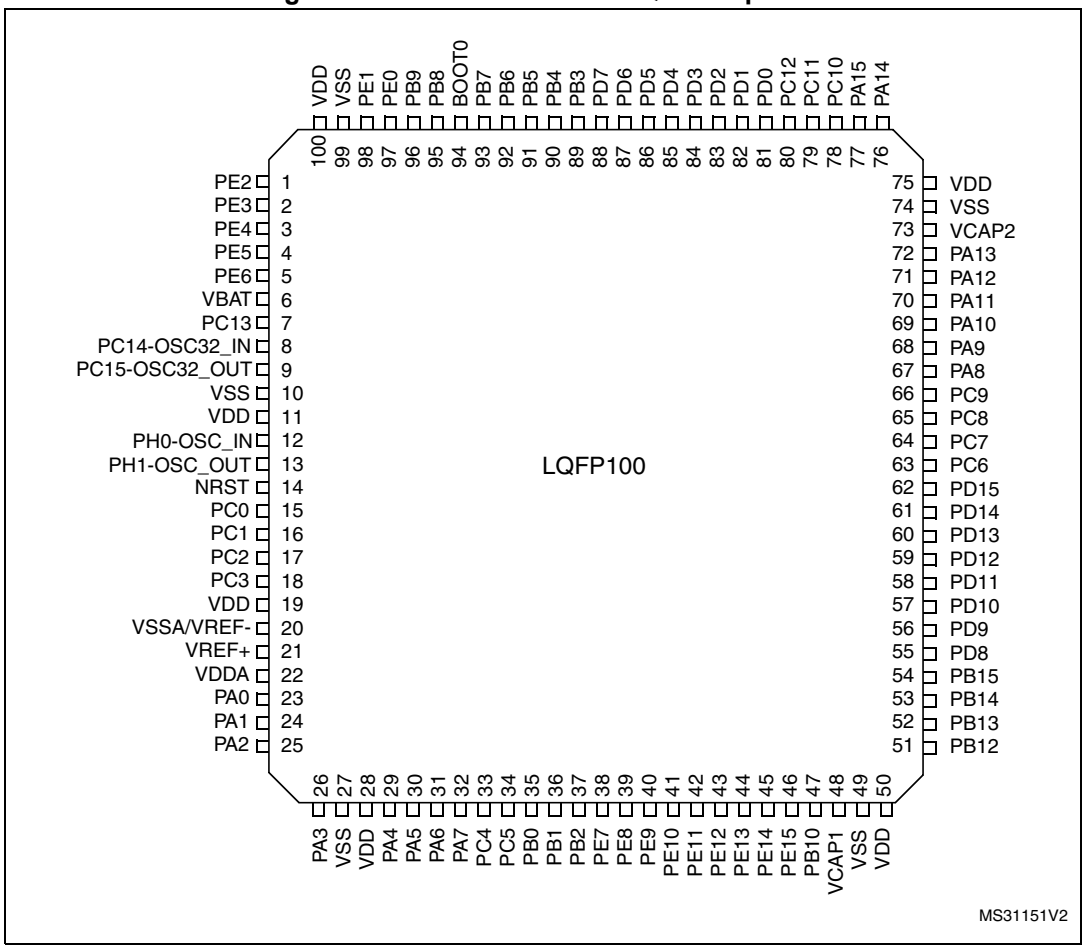

1. The above figure shows the package top view.

Figure 14. STM32F401xD/xE UFBGA100 pinout

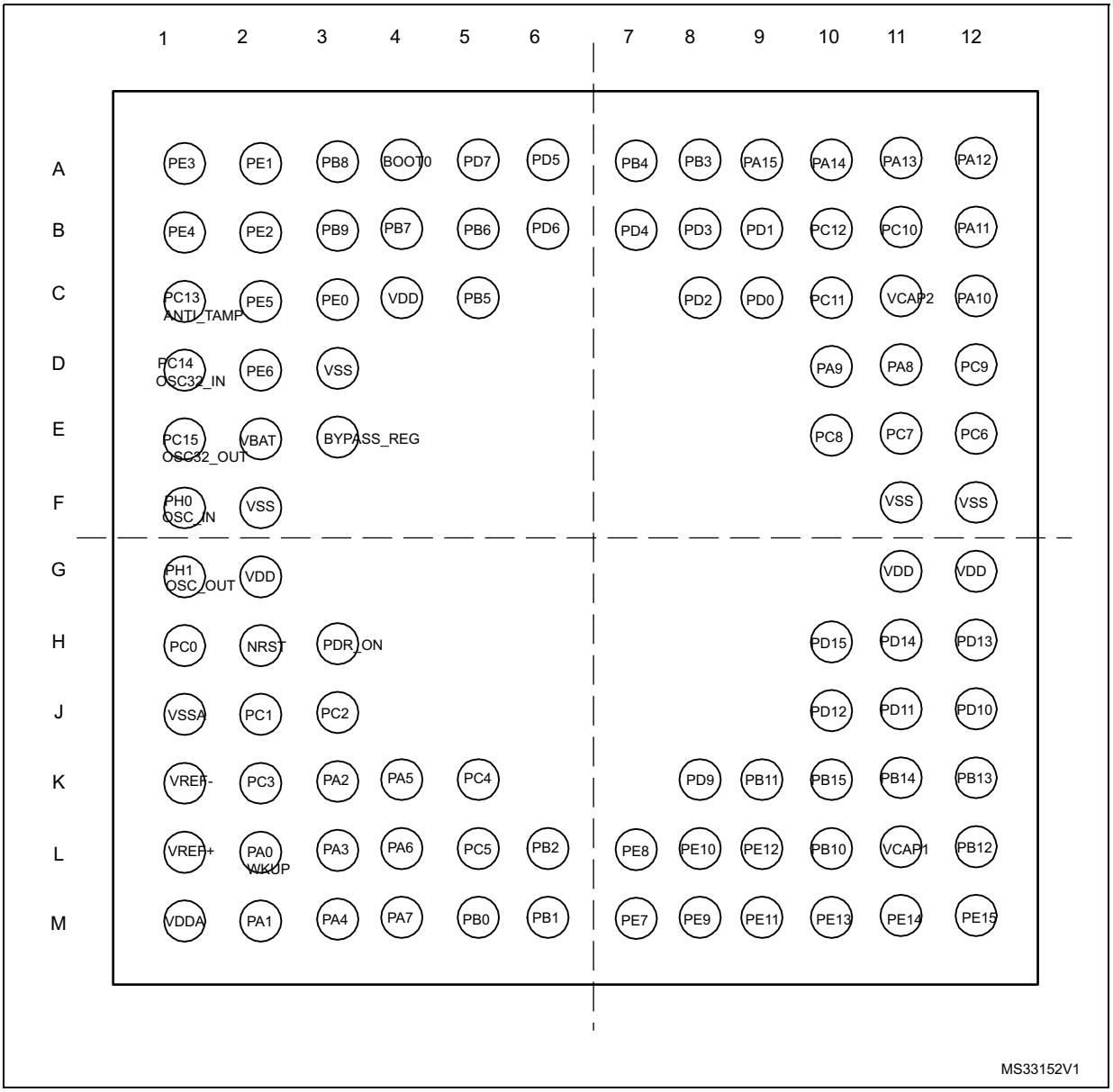

1. This figure shows the package top view

Table 7. Legend/abbreviations used in the pinout table

Name	Abbreviation	Definition
Pin name	Unless otherwise specified in brackets below the pin name, the pin function during and after reset is the same as the actual pin name	
Pin type	S	Supply pin
	I	Input only pin
	I/O	Input/ output pin
I/O structure	FT	5 V tolerant I/O
	B	Dedicated BOOT0 pin
	NRST	Bidirectional reset pin with embedded weak pull-up resistor
Notes	Unless otherwise specified by a note, all I/Os are set as floating inputs during and after reset	
Alternate functions	Functions selected through GPIOx_AFR registers	
Additional functions	Functions directly selected/enabled through peripheral registers	

Table 8. STM32F401xD/xE pin definitions

Pin Number					Pin name (function after reset)(1)	Pin type	I/O structure	Notes	Alternate functions	Additional functions
UQFN48	WLCSP49	LQFP64	LQFP100	UFBGA100						
-	-	-	1	B2	PE2	I/O	FT	-	SPI4_SCK, TRACECLK, EVENTOUT	-
-	-	-	2	A1	PE3	I/O	FT	-	TRACED0, EVENTOUT	-
-	-	-	3	B1	PE4	I/O	FT	-	SPI4_NSS, TRACED1, EVENTOUT	-
-	-	-	4	C2	PE5	I/O	FT	-	SPI4_MISO, TIM9_CH1, TRACED2, EVENTOUT	-
-	-	-	5	D2	PE6	I/O	FT	-	SPI4_MOSI, TIM9_CH2, TRACED3, EVENTOUT	-
-	-	-	-	D3	VSS	S	-	-	-	-
-	-	-	-	C4	VDD	S	-	-	-	-
1	B7	1	6	E2	VBAT	S	-	-	-	-
2	D5	2	7	C1	PC13	I/O	FT	(2) (3)	EVENTOUT,	RTC_TAMP1, RTC_OUT, RTC_TS

Table 8. STM32F401xD/xE pin definitions (continued)

Pin Number					Pin name (function after reset)(1)	Pin type	I/O structure	Notes	Alternate functions	Additional functions
UQFN48	WLCSP49	LQFP64	LQFP100	UFBGA100						
3	C7	3	8	D1	PC14-OSC32_IN (PC14)	I/O	FT	(2) (3) (4)	EVENTOUT	OSC32_IN
4	C6	4	9	E1	PC15-OSC32_OUT (PC15)	I/O	FT	(2) (3) (4)	EVENTOUT	OSC32_OUT
-	-	-	10	F2	VSS	S	-	-	-	-
-	-	-	11	G2	VDD	S	-	-	-	-
5	D7	5	12	F1	PH0-OSC_IN (PH0)	I/O	FT	(4)	EVENTOUT	OSC_IN
6	D6	6	13	G1	PH1-OSC_OUT (PH1)	I/O	FT	(4)	EVENTOUT	OSC_OUT
7	E7	7	14	H2	NRST	I/O	FT	-	EVENTOUT	-
-	-	8	15	H1	PC0	I/O	FT	-	EVENTOUT	ADC1_IN10
-	-	9	16	J2	PC1	I/O	FT	-	EVENTOUT	ADC1_IN11
-	-	10	17	J3	PC2	I/O	FT	-	SPI2_MISO, I2S2ext_SD, EVENTOUT	ADC1_IN12
-	-	11	18	K2	PC3	I/O	FT	-	SPI2_MOSI/I2S2_SD, EVENTOUT	ADC1_IN13
-	-	-	19	-	VDD	S	-	-	-	-
8	E6	12	20	-	VSSA/VREF-	S	-	-	-	-
-	-	-	-	J1	VSSA	S	-	-	-	-
-	-	-	-	K1	VREF-	S	-	-	-	-
9	-	13	-	-	VDDA/VREF+	S	-	-	-	-
-	-	-	21	L1	VREF+	S	-	-	-	-
-	F7	-	22	M1	VDDA	S	-	-	-	-
10	F6	14	23	L2	PA0	I/O	FT	(5)	USART2_CTS, TIM2_CH1/TIM2_ETR, TIM5_CH1, EVENTOUT	ADC1_IN0, WKUP
11	G7	15	24	M2	PA1	I/O	FT	-	USART2_RTS, TIM2_CH2, TIM5_CH2, EVENTOUT	ADC1_IN1
12	E5	16	25	K3	PA2	I/O	FT	-	USART2_TX, TIM2_CH3, TIM5_CH3, TIM9_CH1, EVENTOUT	ADC1_IN2

Table 8. STM32F401xD/xE pin definitions (continued)

Pin Number					Pin name (function after reset)(1)	Pin type	I/O structure	Notes	Alternate functions	Additional functions
UQFN48	WLCSP49	LQFP64	LQFP100	UFBGA100						
13	E4	17	26	L3	PA3	I/O	FT	-	USART2_RX, TIM2_CH4, TIM5_CH4, TIM9_CH2, EVENTOUT	ADC1_IN3
-	-	18	27	-	VSS	S	-	-	-	-
-	-	19	28	-	VDD	S	-	-	-	-
-	-	-	-	E3	BYPASS_ REG	I	FT	-	-	-
14	G6	20	29	M3	PA4	I/O	FT	-	SPI1_NSS, SPI3_NSS/I2S3_WS, USART2_CK, EVENTOUT	ADC1_IN4
15	F5	21	30	K4	PA5	I/O	FT	-	SPI1_SCK, TIM2_CH1/TIM2_ETR, EVENTOUT	ADC1_IN5
16	F4	22	31	L4	PA6	I/O	FT	-	SPI1_MISO, TIM1_BKIN, TIM3_CH1, EVENTOUT	ADC1_IN6
17	F3	23	32	M4	PA7	I/O	FT	-	SPI1_MOSI, TIM1_CH1N, TIM3_CH2, EVENTOUT	ADC1_IN7
-	-	24	33	K5	PC4	I/O	FT	-	EVENTOUT	ADC1_IN14
-	-	25	34	L5	PC5	I/O	FT	-	EVENTOUT	ADC1_IN15
18	G5	26	35	M5	PB0	I/O	FT	-	TIM1_CH2N, TIM3_CH3, EVENTOUT	ADC1_IN8
19	G4	27	36	M6	PB1	I/O	FT	-	TIM1_CH3N, TIM3_CH4, EVENTOUT	ADC1_IN9
20	G3	28	37	L6	PB2	I/O	FT	-	EVENTOUT	BOOT1
-	-	-	38	M7	PE7	I/O	FT	-	TIM1_ETR, EVENTOUT	-
-	-	-	39	L7	PE8	I/O	FT	-	TIM1_CH1N, EVENTOUT	-
-	-	-	40	M8	PE9	I/O	FT	-	TIM1_CH1, EVENTOUT	-
-	-	-	41	L8	PE10	I/O	FT	-	TIM1_CH2N, EVENTOUT	-
-	-	-	42	M9	PE11	I/O	FT	-	SPI4_NSS, TIM1_CH2, EVENTOUT	-
-	-	-	43	L9	PE12	I/O	FT	-	SPI4_SCK, TIM1_CH3N, EVENTOUT	-
-	-	-	44	M10	PE13	I/O	FT	-	SPI4_MISO, TIM1_CH3, EVENTOUT	-

Table 8. STM32F401xD/xE pin definitions (continued)

Pin Number					Pin name (function after reset)(1)	Pin type	I/O structure	Notes	Alternate functions	Additional functions
UQFN48	WLCSP49	LQFP64	LQFP100	UFBGA100						
-	-	-	45	M11	PE14	I/O	FT	-	SPI4_MOSI, TIM1_CH4, EVENTOUT	-
-	-	-	46	M12	PE15	I/O	FT	-	TIM1_BKIN, EVENTOUT	-
21	E3	29	47	L10	PB10	I/O	FT	-	SPI2_SCK/I2S2_CK, I2C2_SCL, TIM2_CH3, EVENTOUT	-
-	-	-	-	K9	PB11	I/O	FT	-	EVENTOUT	-
22	G2	30	48	L11	VCAP1	S	-	-	-	-
23	D3	31	49	F12	VSS	S	-	-	-	-
24	F2	32	50	G12	VDD	S	-	-	-	-
25	E2	33	51	L12	PB12	I/O	FT	-	SPI2_NSS/I2S2_WS, I2C2_SMBA, TIM1_BKIN, EVENTOUT	-
26	G1	34	52	K12	PB13	I/O	FT	-	SPI2_SCK/I2S2_CK, TIM1_CH1N, EVENTOUT	-
27	F1	35	53	K11	PB14	I/O	FT	-	SPI2_MISO, I2S2ext_SD, TIM1_CH2N, EVENTOUT	-
28	E1	36	54	K10	PB15	I/O	FT	-	SPI2_MOSI/I2S2_SD, TIM1_CH3N, EVENTOUT	RTC_REFIN
-	-	-	55	-	PD8	I/O	FT	-	EVENTOUT	-
-	-	-	56	K8	PD9	I/O	FT	-	EVENTOUT	-
-	-	-	57	J12	PD10	I/O	FT	-	EVENTOUT	-
-	-	-	58	J11	PD11	I/O	FT	-	EVENTOUT	-
-	-	-	59	J10	PD12	I/O	FT	-	TIM4_CH1, EVENTOUT	-
-	-	-	60	H12	PD13	I/O	FT	-	TIM4_CH2, EVENTOUT	-
-	-	-	61	H11	PD14	I/O	FT	-	TIM4_CH3, EVENTOUT	-
-	-	-	62	H10	PD15	I/O	FT	-	TIM4_CH4, EVENTOUT	-
-	-	37	63	E12	PC6	I/O	FT	-	I2S2_MCK, USART6_TX, TIM3_CH1, SDIO_D6, EVENTOUT	-
-	-	38	64	E11	PC7	I/O	FT	-	I2S3_MCK, USART6_RX, TIM3_CH2, SDIO_D7, EVENTOUT	-

Table 8. STM32F401xD/xE pin definitions (continued)

Pin Number					Pin name (function after reset)(1)	Pin type	I/O structure	Notes	Alternate functions	Additional functions
UQFN48	WLCSP49	LQFP64	LQFP100	UFBGA100						
-	-	39	65	E10	PC8	I/O	FT	-	USART6_CK, TIM3_CH3, SDIO_D0, EVENTOUT	-
-	-	40	66	D12	PC9	I/O	FT	-	I2S_CKIN, I2C3_SDA, TIM3_CH4, SDIO_D1, MCO_2, EVENTOUT	-
29	D1	41	67	D11	PA8	I/O	FT	-	I2C3_SCL, USART1_CK, TIM1_CH1, OTG_FS_SOF, MCO_1, EVENTOUT	-
30	D2	42	68	D10	PA9	I/O	FT	-	I2C3_SMBA, USART1_TX, TIM1_CH2, EVENTOUT	OTG_FS_VBUS
31	C2	43	69	C12	PA10	I/O	FT	-	USART1_RX, TIM1_CH3, OTG_FS_ID, EVENTOUT	-
32	C1	44	70	B12	PA11	I/O	FT	-	USART1_CTS, USART6_TX, TIM1_CH4, OTG_FS_DM, EVENTOUT	-
33	C3	45	71	A12	PA12	I/O	FT	-	USART1_RTS, USART6_RX, TIM1_ETR, OTG_FS_DP, EVENTOUT	-
34	B3	46	72	A11	PA13 (JTMS-SWDIO)	I/O	FT	-	JTMS-SWDIO, EVENTOUT	-
-	-	-	73	C11	VCAP2	S	-	-	-	-
35	B1	47	74	F11	VSS	S	-	-	-	-
36	-	48	75	G11	VDD	S	-	-	-	-
-	B2	-	-	-	VDD	S	-	-	-	-
37	A1	49	76	A10	PA14 (JTCK-SWCLK)	I/O	FT	-	JTCK-SWCLK, EVENTOUT	-
38	A2	50	77	A9	PA15 (JTDI)	I/O	FT	-	JTDI, SPI1_NSS, SPI3_NSS/I2S3_WS, TIM2_CH1/TIM2_ETR, JTDI, EVENTOUT	-
-	-	51	78	B11	PC10	I/O	FT	-	SPI3_SCK/I2S3_CK, SDIO_D2, EVENTOUT	-
-	-	52	79	C10	PC11	I/O	FT	-	I2S3ext_SD, SPI3_MISO, SDIO_D3, EVENTOUT	-
-	-	53	80	B10	PC12	I/O	FT	-	SPI3_MOSI/I2S3_SD, SDIO_CK, EVENTOUT	-
-	-	-	81	C9	PD0	I/O	FT	-	EVENTOUT	-

Table 8. STM32F401xD/xE pin definitions (continued)

Pin Number					Pin name (function after reset)(1)	Pin type	I/O structure	Notes	Alternate functions	Additional functions
UQFN48	WLCSP49	LQFP64	LQFP100	UFBGA100						
-	-	-	82	B9	PD1	I/O	FT	-	EVENTOUT	-
-	-	54	83	C8	PD2	I/O	FT	-	TIM3_ETR, SDIO_CMD, EVENTOUT	-
-	-	-	84	B8	PD3	I/O	FT	-	SPI2_SCK/I2S2_CK, USART2_CTS, EVENTOUT	-
-	-	-	85	B7	PD4	I/O	FT	-	USART2_RTS, EVENTOUT	-
-	-	-	86	A6	PD5	I/O	FT	-	USART2_TX, EVENTOUT	-
-	-	-	87	B6	PD6	I/O	FT	-	SPI3_MOSI/I2S3_SD, USART2_RX, EVENTOUT	-
-	-	-	88	A5	PD7	I/O	FT	-	USART2_CK, EVENTOUT	-
39	A3	55	89	A8	PB3 (JTDO-SWO)	I/O	FT	-	JTDO-SWO, SPI1_SCK, SPI3_SCK/I2S3_CK, I2C2_SDA, TIM2_CH2, EVENTOUT	-
40	A4	56	90	A7	PB4 (NJTRST)	I/O	FT	-	NJTRST, SPI1_MISO, SPI3_MISO, I2S3ext_SD, I2C3_SDA, TIM3_CH1, EVENTOUT	-
41	B4	57	91	C5	PB5	I/O	FT	-	SPI1_MOSI, SPI3_MOSI/I2S3_SD, I2C1_SMBA, TIM3_CH2, EVENTOUT	-
42	C4	58	92	B5	PB6	I/O	FT	-	I2C1_SCL, USART1_TX, TIM4_CH1, EVENTOUT	-
43	D4	59	93	B4	PB7	I/O	FT	-	I2C1_SDA, USART1_RX, TIM4_CH2, EVENTOUT	-
44	A5	60	94	A4	BOOT0	I	B	-	-	V_{PP}
45	B5	61	95	A3	PB8	I/O	FT	-	I2C1_SCL, TIM4_CH3, TIM10_CH1, SDIO_D4, EVENTOUT	-
46	C5	62	96	B3	PB9	I/O	FT	-	SPI2_NSS/I2S2_WS, I2C1_SDA, TIM4_CH4, TIM11_CH1, SDIO_D5, EVENTOUT	-
-	-	-	97	C3	PE0	I/O	FT	-	TIM4_ETR, EVENTOUT	-
-	-	-	98	A2	PE1	I/O	FT	-	EVENTOUT	-

Table 8. STM32F401xD/xE pin definitions (continued)

Pin Number					Pin name (function after reset)(1)	Pin type	I/O structure	Notes	Alternate functions	Additional functions
UQFN48	WLCSP49	LQFP64	LQFP100	UFBGA100						
47	A6	63	99	-	VSS	S	-	-	-	-
-	B6	-	-	H3	PDR_ON	I	FT	-	-	-
48	A7	64	100	-	VDD	S	-	-	-	-

1. Function availability depends on the chosen device.
2. PC13, PC14 and PC15 are supplied through the power switch. Since the switch only sinks a limited amount of current (3 mA), the use of GPIOs PC13 to PC15 in output mode is limited:
   - The speed should not exceed 2 MHz with a maximum load of 30 pF.
   - These I/Os must not be used as a current source (e.g. to drive an LED).
3. Main function after the first backup domain power-up. Later on, it depends on the contents of the RTC registers even after reset (because these registers are not reset by the main reset). For details on how to manage these I/Os, refer to the RTC register description sections in the STM32F401xx reference manual.
4. FT = 5 V tolerant except when in analog mode or oscillator mode (for PC14, PC15, PH0 and PH1).
5. If the device is delivered in an UFBGA100 and the BYPASS_REG pin is set to VDD (Regulator off/internal reset ON mode), then PA0 is used as an internal Reset (active low)

Table 9. Alternate function mapping

Port		AF00	AF01	AF02	AF03	AF04	AF05	AF06	AF07	AF08	AF09	AF10	AF11	AF12	AF13	AF14	AF15
		SYS_AF	TIM1/TIM2	TIM3/ TIM4/ TIM5	TIM9/ TIM10/ TIM11	I2C1/I2C2/ I2C3	SPI1/SPI2/ I2S2/SPI3/ I2S3/SPI4	SPI2/I2S2/ SPI3/ I2S3	SPI3/I2S3/ USART1/ USART2	USART6	I2C2/ I2C3	OTG1_FS		SDIO			
Port A	PA0	-	TIM2_CH1/ TIM2_ETR	TIM5_CH1	-	-	-	-	USART2_ CTS	-	-	-	-	-	-	-	EVENT OUT
	PA1	-	TIM2_CH2	TIM5_CH2	-	-	-	-	USART2_ RTS	-	-	-	-	-	-	-	EVENT OUT
	PA2	-	TIM2_CH3	TIM5_CH3	TIM9_CH1	-	-	-	USART2_ TX	-	-	-	-	-	-	-	EVENT OUT
	PA3	-	TIM2_CH4	TIM5_CH4	TIM9_CH2	-		-	USART2_ RX	-	-	-	-	-	-	-	EVENT OUT
	PA4	-	-	-	-	-	SPI1_NSS	SPI3_NSS/ I2S3_WS	USART2_ CK	-	-	-	-	-	-	-	EVENT OUT
	PA5	-	TIM2_CH1/ TIM2_ETR	-	-	-	SPI1_SCK	-	-	-	-	-	-	-	-	-	EVENT OUT
	PA6	-	TIM1_BKIN	TIM3_CH1	-	-	SPI1_ MISO	-	-	-	-	-	-	-	-	-	EVENT OUT
	PA7	-	TIM1_CH1N	TIM3_CH2	-	-	SPI1_ MOSI	-	-	-	-	-	-	-	-	-	EVENT OUT
	PA8	MCO_1	TIM1_CH1	-	-	I2C3_SCL	-	-	USART1_ CK	-	-	OTG_FS_ SOF	-	-	-	-	EVENT OUT
	PA9	-	TIM1_CH2	-	-	I2C3_ SMBA	-	-	USART1_ TX	-	-	OTG_FS_ VBUS	-	-	--	-	EVENT OUT
	PA10	-	TIM1_CH3	-	-	-	-	-	USART1_ RX	-	-	OTG_FS_I D	-	-	-	-	EVENT OUT
	PA11	-	TIM1_CH4	-	-	-	-	-	USART1_ CTS	USART6_ TX	-	OTG_FS_ DM	-	-	-	-	EVENT OUT
	PA12	-	TIM1_ETR	-	-	-	-	-	USART1_ RTS	USART6_ RX	-	OTG_FS_ DP	-	-	-	-	EVENT OUT
	PA13	JTMS_ SWDIO	-	-	-	-	-	-	-	-	-	-	-	-	-	-	EVENT OUT
	PA14	JTCK_ SWCLK	-	-	-	-	-	-	-	-	-	-	-	-	-	-	EVENT OUT
	PA15	JTDI	TIM2_CH1/ TIM2_ETR	-	-	-	SPI1_NSS	SPI3_NSS/ I2S3_WS	-	-	-	-	-	-	-	-	EVENT OUT

Table 9. Alternate function mapping (continued)

Port		AF00	AF01	AF02	AF03	AF04	AF05	AF06	AF07	AF08	AF09	AF10	AF11	AF12	AF13	AF14	AF15
		SYS_AF	TIM1/TIM2	TIM3/ TIM4/ TIM5	TIM9/ TIM10/ TIM11	I2C1/I2C2/ I2C3	SPI1/SPI2/ I2S2/SPI3/ I2S3/SPI4	SPI2/I2S2/ SPI3/ I2S3	SPI3/I2S3/ USART1/ USART2	USART6	I2C2/ I2C3	OTG1_FS		SDIO			
Port B	PB0	-	TIM1_CH2N	TIM3_CH3	-	-	-	-	-	-	-	-	-	-	-	-	EVENT OUT
	PB1	-	TIM1_CH3N	TIM3_CH4	-	-	-	-	-	-	-	-	-	-	-	-	EVENT OUT
	PB2	-	-	-	-	-	-	-	-	-	-	-	-	-	-	-	EVENT OUT
	PB3	JTDO-SWO	TIM2_CH2	-	-	-	SPI1_SCK	SPI3_SCK/ I2S3_CK	-	-	I2C2_SDA	-	-	-	-	-	EVENT OUT
	PB4	JTRST	-	TIM3_CH1	-	-	SPI1_ MISO	SPI3_MISO	I2S3ext_S D	-	I2C3_SDA	-	-	-	-	-	EVENT OUT
	PB5	-	-	TIM3_CH2	-	I2C1_ SMBA	SPI1 _MOSI	SPI3_MOSI/ I2S3_SD	-	-	-	-	-	-	-	-	EVENT OUT
	PB6	-	-	TIM4_CH1	-	I2C1_SCL	-	-	USART1_ TX	-	-	-	-	-	-	-	EVENT OUT
	PB7	-	-	TIM4_CH2	-	I2C1_SDA	-	-	USART1_ RX	-	-	-	-	-	-	-	EVENT OUT
	PB8	-	-	TIM4_CH3	TIM10_CH1	I2C1_SCL	-	-	-	-	-	-	-	SDIO_ D4	-	-	EVENT OUT
	PB9	-	-	TIM4_CH4	TIM11_CH1	I2C1_SDA	SPI2_NSS/I 2S2_WS	-	-	-	-	-	-	SDIO_ D5	-	-	EVENT OUT
	PB10	-	TIM2_CH3	-	-	I2C2_SCL	SPI2_SCK/I 2S2_CK	-	-	-	-	-	-	-	-	-	EVENT OUT
	PB12	-	TIM1_BKIN	-	-	I2C2_ SMBA	SPI2_NSS/I 2S2_WS	-	-	-	-	-	-	-	-	-	EVENT OUT
	PB13	-	TIM1_CH1N	-	-	-	SPI2_SCK/I 2S2_CK	-	-	-	-	-	-	-	-	-	EVENT OUT
	PB14	-	TIM1_CH2N	-	-	-	SPI2_MISO	I2S2ext_SD	-	-	-	-	-	-	-	-	EVENT OUT
	PB15	RTC_ REFN	TIM1_CH3N	-	-	-	SPI2_MOSI /I2S2_SD	-	-	-	-	-	-	-	-	-	EVENT OUT

Table 9. Alternate function mapping (continued)

Port		AF00	AF01	AF02	AF03	AF04	AF05	AF06	AF07	AF08	AF09	AF10	AF11	AF12	AF13	AF14	AF15
		SYS_AF	TIM1/TIM2	TIM3/ TIM4/ TIM5	TIM9/ TIM10/ TIM11	I2C1/I2C2/ I2C3	SPI1/SPI2/ I2S2/SPI3/ I2S3/SPI4	SPI2/I2S2/ SPI3/ I2S3	SPI3/I2S3/ USART1/ USART2	USART6	I2C2/ I2C3	OTG1_FS		SDIO			
Port C	PC0	-	-	-	-	-	-	-	-	-	-	-	-	-	-	-	EVENT OUT
	PC1	-	-	-	-	-	-	-	-	-	-	-	-	-	-	-	EVENT OUT
	PC2	-	-	-	-	-	SPI2_ MISO	I2S2ext_SD	-	-	-	-	-	-	-	-	EVENT OUT
	PC3	-	-	-	-	-	SPI2_MOSI /I2S2_SD	-	-	-	-	-	-	-	-	-	EVENT OUT
	PC4	-	-	-	-	-	-	-	-	-	-	-	-	-	-	-	EVENT OUT
	PC5	-	-	-	-	-	-	-	-	-	-	-	-	-	-	-	EVENT OUT
	PC6	-	--	TIM3_CH1	-	-	I2S2_MCK	-	-	USART6_ TX	-	-	-	SDIO_ D6	-	-	EVENT OUT
	PC7	-		TIM3_CH2	-	-	-	I2S3_MCK	-	USART6_ RX	-	-	-	SDIO_ D7	-	-	EVENT OUT
	PC8	-	-	TIM3_CH3	-	-	-	-	-	USART6_ CK	-	-	-	SDIO_ D0	-	-	EVENT OUT
	PC9	MCO_2	-	TIM3_CH4	-	I2C3_SDA	I2S_CKIN	-	-	-	-	-	-	SDIO_ D1	-	-	EVENT OUT
	PC10	-	-	-	-	-	-	SPI3_SCK/ I2S3_CK	-	-	-	-	-	SDIO_ D2	-	-	EVENT OUT
	PC11	-	-	-	-	-	I2S3ext_ SD	SPI3_MISO	-	-	-	-	-	SDIO_ D3	-	-	EVENT OUT
	PC12	-	-	-	-	-	-	SPI3_MOSI/ I2S3_SD	-	-	-	-	-	SDIO_ CK	-	-	EVENT OUT
	PC13	-	-	-	-	-	-	-	-	-	-	-	-	-	-	-	EVENT OUT
	PC14	-	-	-	-	-	-	-	-	-	-	-	-	-	-	-	EVENT OUT
	PC15	-	-	-	-	-	-	-	-	-	-	-	-	-	-	-	EVENT OUT

Table 9. Alternate function mapping (continued)

Port		AF00	AF01	AF02	AF03	AF04	AF05	AF06	AF07	AF08	AF09	AF10	AF11	AF12	AF13	AF14	AF15
		SYS_AF	TIM1/TIM2	TIM3/ TIM4/ TIM5	TIM9/ TIM10/ TIM11	I2C1/I2C2/ I2C3	SPI1/SPI2/ I2S2/SPI3/ I2S3/SPI4	SPI2/I2S2/ SPI3/ I2S3	SPI3/I2S3/ USART1/ USART2	USART6	I2C2/ I2C3	OTG1_FS		SDIO			
Port D	PD0	-	-	-	-	-	-	-	-	-	-	-	-	-	-	-	EVENT OUT
	PD1	-	-	-	-	-	-	-	-	-	-	-	-	-	-	-	EVENT OUT
	PD2	-	-	TIM3_ETR	-	-	-	-	-	-	-	-	-	SDIO_ CMD	-	-	EVENT OUT
	PD3	-	-	-	-	-	SPI2_SCK/ I2S2_CK	-	USART2_ CTS	--	-	-	-	-	-	-	EVENT OUT
	PD4	-	-	-	-	-	-	-	USART2_ RTS		-	-	-	-	-	-	EVENT OUT
	PD5	-	-	-	-	-	-	-	USART2_ TX	-	-	-	-	-	-	-	EVENT OUT
	PD6	-	-	-	-	-	SPI3_MOSI /I2S3_SD	-	USART2_ RX	-	-	-	-	-	-	-	EVENT OUT
	PD7	-	-	-	-	-	-	-	USART2_ CK	-	-	-	-	-	-	-	EVENT OUT
	PD8	-	-	-	-	-	-	-	-	-	-	-	-	-	-	-	EVENT OUT
	PD9	-	-	-	-	-	-	-	-	-	-	-	-	-	-	-	EVENT OUT
	PD10	-	-	-	-	-	-	-	-	-	-	-	-	-	-	-	EVENT OUT
	PD11	-	-	-	-	-	-	-	-	-	-	-	-	-	-	-	EVENT OUT
	PD12	-	-	TIM4_CH1	-	-	-	-	-	-	-	-	-	-	-	-	EVENT OUT
	PD13	-	-	TIM4_CH2	-	-	-	-	-	-	-	-	-	-	-	-	EVENT OUT
	PD14	-	-	TIM4_CH3	-	-	-	-	-	-	-	-	-	-	-	-	EVENT OUT
	PD15	-	-	TIM4_CH4	-	-	-	-	-	-	-	-	-	-	-	-	EVENT OUT

Table 9. Alternate function mapping (continued)

Port		AF00	AF01	AF02	AF03	AF04	AF05	AF06	AF07	AF08	AF09	AF10	AF11	AF12	AF13	AF14	AF15
		SYS_AF	TIM1/TIM2	TIM3/ TIM4/ TIM5	TIM9/ TIM10/ TIM11	I2C1/I2C2/ I2C3	SPI1/SPI2/ I2S2/SPI3/ I2S3/SPI4	SPI2/I2S2/ SPI3/ I2S3	SPI3/I2S3/ USART1/ USART2	USART6	I2C2/ I2C3	OTG1_FS		SDIO			
Port E	PE0	-	-	TIM4_ETR	-	-	-	-	-	-	-	-	-	-	-	-	EVENT OUT
	PE1	-	TIM1_CH2N	-	-	-	-	-	-	-	-	-	-	-	-	-	EVENT OUT
	PE2	TRACECL K	-	-	-	-	SPI4_SCK	-	-	-	-	-	-	-	-	-	EVENT OUT
	PE3	TRACED0	-	-	-	-	-	-	-	-	-	-	-	-	-	-	EVENT OUT
	PE4	TRACED1	-	-	-	-	SPI4_NSS	-	-	-	-	-	-	-	-	-	EVENT OUT
	PE5	TRACED2	-	-	TIM9_CH1	-	SPI4_MISO	-	-	-	-	-	-	-	-	-	EVENT OUT
	PE6	TRACED3	-	-	TIM9_CH2	-	SPI4_MOSI	-	-	-	-	-	-	-	-	-	EVENT OUT
	PE7	-	TIM1_ETR	-	-	-	-	-	-	-	-	-	-	-	-	-	EVENT OUT
	PE8	-	TIM1_CH1N	-	-	-	-	-	-	-	-	-	-	-	-	-	EVENT OUT
	PE9	-	TIM1_CH1	-	-	-	-	-	-	-	-	-	-	-	-	-	EVENT OUT
	PE10	-	TIM1_CH2N	-	-	-	-	-	-	-	-	-	-	-	-	-	EVENT OUT
	PE11	-	TIM1_CH2	-	-	-	SPI4_NSS	-	-	-	-	-	-	-	-	-	EVENT OUT
	PE12	-	TIM1_CH3N	-	-	-	SPI4_SCK	-	-	-	-	-	-	-	-	-	EVENT OUT
	PE13	-	TIM1_CH3	-	-	-	SPI4_MISO	-	-	-	-	-	-	-	-	-	EVENT OUT
	PE14	-	TIM1_CH4	-	-	-	SPI4_MOSI	-	-	-	-	-	-	-	-	-	EVENT OUT
	PE15	-	TIM1_BKIN	-	-	-	-	-	-	-	-	-	-	-	-	-	EVENT OUT

Table 9. Alternate function mapping (continued)

Port		AF00	AF01	AF02	AF03	AF04	AF05	AF06	AF07	AF08	AF09	AF10	AF11	AF12	AF13	AF14	AF15
		SYS_AF	TIM1/TIM2	TIM3/ TIM4/ TIM5	TIM9/ TIM10/ TIM11	I2C1/I2C2/ I2C3	SPI1/SPI2/ I2S2/SPI3/ I2S3/SPI4	SPI2/I2S2/ SPI3/ I2S3	SPI3/I2S3/ USART1/ USART2	USART6	I2C2/ I2C3	OTG1_FS		SDIO			
Port H	PH0	-	-	-	-	-	-	-	-	-	-	-	-	-	-	-	EVENT OUT
	PH1	-	-	-	-	-	-	-	-	-	-	-	-	-	-	-	EVENT OUT

5 Memory mapping

The memory map is shown in *Figure 15*.

Figure 15. Memory map

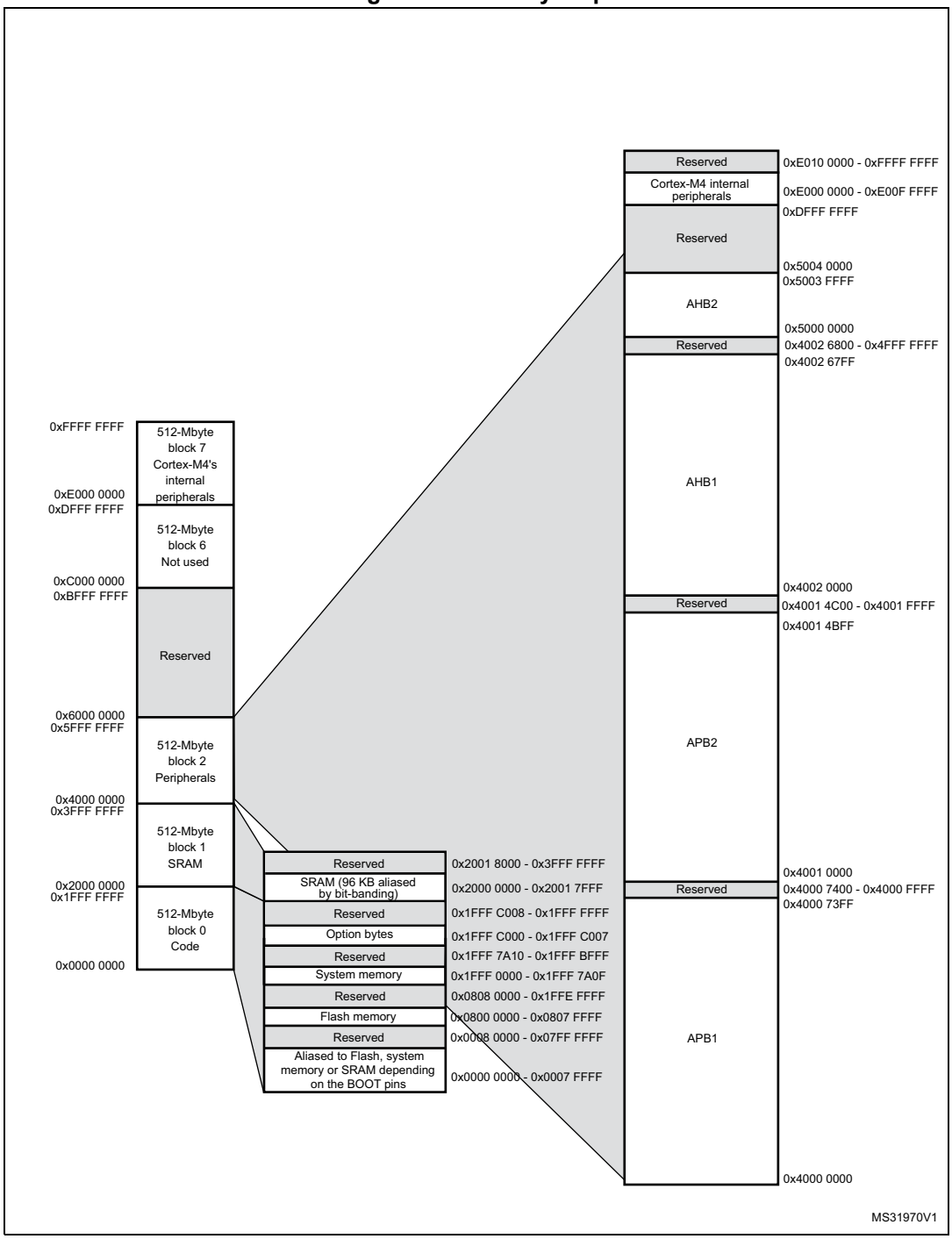

Table 10. STM32F401xD register boundary addresses

Bus	Boundary address	Peripheral
	0xE010 0000 - 0xFFFF FFFF	Reserved
Cortex®-M4	0xE000 0000 - 0xE00F FFFF	Cortex-M4 internal peripherals
	0x5004 0000 - 0xDFFF FFFF	Reserved
AHB2	0x5000 0000 - 0x5003 FFFF	USB OTG FS
AHB1	0x4002 6800 - 0x4FFF FFFF	Reserved
	0x4002 6400 - 0x4002 67FF	DMA2
	0x4002 6000 - 0x4002 63FF	DMA1
	0x4002 5000 - 0x4002 4FFF	Reserved
	0x4002 3C00 - 0x4002 3FFF	Flash interface register
	0x4002 3800 - 0x4002 3BFF	RCC
	0x4002 3400 - 0x4002 37FF	Reserved
	0x4002 3000 - 0x4002 33FF	CRC
	0x4002 2000 - 0x4002 2FFF	Reserved
	0x4002 1C00 - 0x4002 1FFF	GPIOH
	0x4002 1400 - 0x4002 1BFF	Reserved
	0x4002 1000 - 0x4002 13FF	GPIOE
	0x4002 0C00 - 0x4002 0FFF	GPIOD
	0x4002 0800 - 0x4002 0BFF	GPIOC
	0x4002 0400 - 0x4002 07FF	GPIOB
	0x4002 0000 - 0x4002 03FF	GPIOA

Table 10. STM32F401xD register boundary addresses (continued)

Bus	Boundary address	Peripheral
APB2	0x4001 4C00- 0x4001 FFFF	Reserved
	0x4001 4800 - 0x4001 4BFF	TIM11
	0x4001 4400 - 0x4001 47FF	TIM10
	0x4001 4000 - 0x4001 43FF	TIM9
	0x4001 3C00 - 0x4001 3FFF	EXTI
	0x4001 3800 - 0x4001 3BFF	SYSCFG
	0x4001 3400 - 0x4001 37FF	SPI4/I2S4
	0x4001 3000 - 0x4001 33FF	SPI1
	0x4001 2C00 - 0x4001 2FFF	SDIO
	0x4001 2400 - 0x4001 2BFF	Reserved
	0x4001 2000 - 0x4001 23FF	ADC1
	0x4001 1800 - 0x4001 1FFF	Reserved
	0x4001 1400 - 0x4001 17FF	USART6
	0x4001 1000 - 0x4001 13FF	USART1
	0x4001 0800 - 0x4001 0FFF	Reserved
	0x4001 0400 - 0x4001 07FF	TIM8
	0x4001 0000 - 0x4001 03FF	TIM1
	0x4000 7400 - 0x4000 FFFF	Reserved

Table 10. STM32F401xD register boundary addresses (continued)

Bus	Boundary address	Peripheral
APB1	0x4000 7000 - 0x4000 73FF	PWR
	0x4000 6000 - 0x4000 6FFF	Reserved
	0x4000 5C00 - 0x4000 5FFF	I2C3
	0x4000 5800 - 0x4000 5BFF	I2C2
	0x4000 5400 - 0x4000 57FF	I2C1
	0x4000 4800 - 0x4000 53FF	Reserved
	0x4000 4400 - 0x4000 47FF	USART2
	0x4000 4000 - 0x4000 43FF	I2S3ext
	0x4000 3C00 - 0x4000 3FFF	SPI3 / I2S3
	0x4000 3800 - 0x4000 3BFF	SPI2 / I2S2
	0x4000 3400 - 0x4000 37FF	I2S2ext
	0x4000 3000 - 0x4000 33FF	IWDG
	0x4000 2C00 - 0x4000 2FFF	WWDG
	0x4000 2800 - 0x4000 2BFF	RTC & BKP Registers
	0x4000 1000 - 0x4000 27FF	Reserved
	0x4000 0C00 - 0x4000 0FFF	TIM5
	0x4000 0800 - 0x4000 0BFF	TIM4
	0x4000 0400 - 0x4000 07FF	TIM3
	0x4000 0000 - 0x4000 03FF	TIM2

6 Electrical characteristics

6.1 Parameter conditions

Unless otherwise specified, all voltages are referenced to V_{SS}.

6.1.1 Minimum and maximum values

Unless otherwise specified the minimum and maximum values are guaranteed in the worst conditions of ambient temperature, supply voltage and frequencies by tests in production on 100% of the devices with an ambient temperature at T_A = 25 °C and T_A = $T_A$max (given by the selected temperature range).

Data based on characterization results, design simulation and/or technology characteristics are indicated in the table footnotes and are not tested in production. Based on characterization, the minimum and maximum values refer to sample tests and represent the mean value plus or minus three times the standard deviation (mean ±3 σ).

6.1.2 Typical values

Unless otherwise specified, typical data are based on T_A = 25 °C, V_{DD} = 3.3 V (for the 1.7 V ≤ V_{DD} ≤ 3.6 V voltage range). They are given only as design guidelines and are not tested.

Typical ADC accuracy values are determined by characterization of a batch of samples from a standard diffusion lot over the full temperature range, where 95% of the devices have an error less than or equal to the value indicated (mean ±2 σ).

6.1.3 Typical curves

Unless otherwise specified, all typical curves are given only as design guidelines and are not tested.

6.1.4 Loading capacitor

The loading conditions used for pin parameter measurement are shown in *Figure 16*.

Figure 16. Pin loading conditions

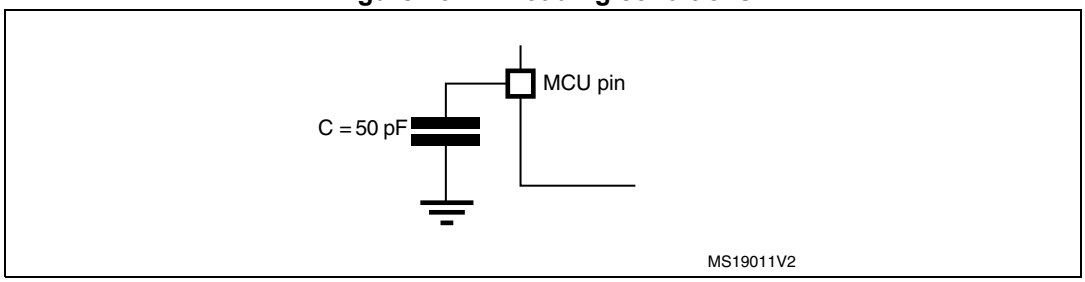

6.1.5 Pin input voltage

The input voltage measurement on a pin of the device is described in *Figure 17*.

Figure 17. Input voltage measurement

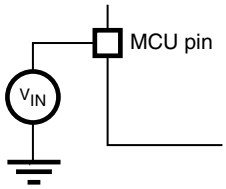

6.1.6 Power supply scheme

Figure 18. Power supply scheme

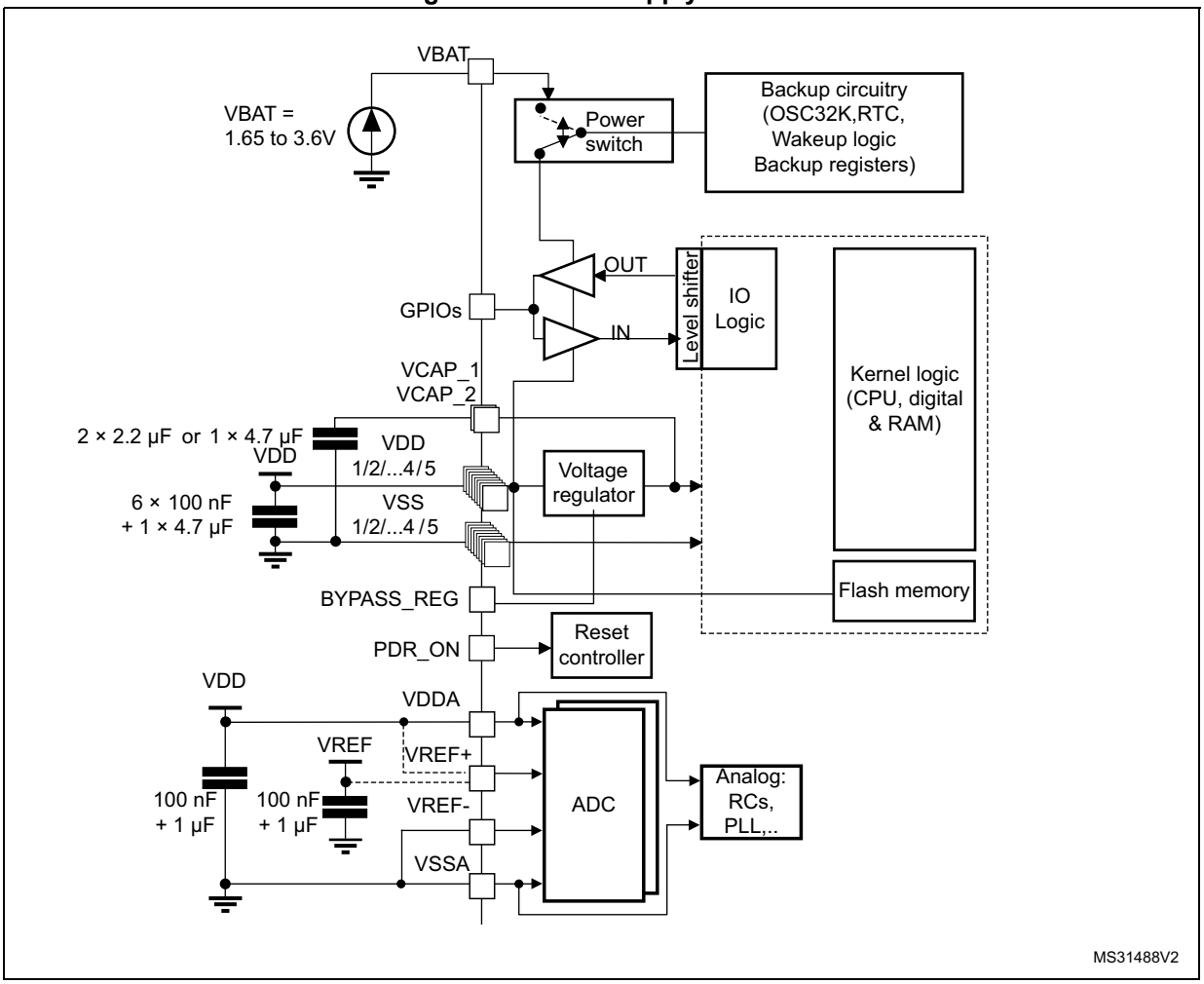

1. To connect PDR_ON pin, refer to *Section 3.14: Power supply supervisor*.
2. The 4.7 µF ceramic capacitor must be connected to one of the V_{DD} pin.
3. V_{CAP_2} pad is only available on LQFP100 and UFBGA100 packages.
4. V_{DDA}=V_{DD} and V_{SSA}=V_{SS}.

Caution: Each power supply pair (V_{DD}/V_{SS}, V_{DDA}/V_{SSA} ...) must be decoupled with filtering ceramic capacitors as shown above. These capacitors must be placed as close as possible to, or below, the appropriate pins on the underside of the PCB to ensure good operation of the device. It is not recommended to remove filtering capacitors to reduce PCB size or cost. This might cause incorrect operation of the device.

6.1.7 Current consumption measurement

Figure 19. Current consumption measurement scheme

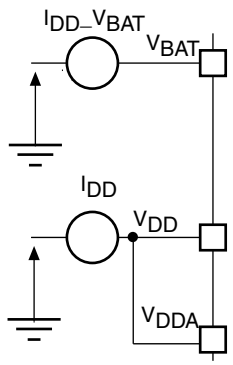

6.2 Absolute maximum ratings

Stresses above the absolute maximum ratings listed in *Table 11: Voltage characteristics*, *Table 12: Current characteristics*, and *Table 13: Thermal characteristics* may cause permanent damage to the device. These are stress ratings only and functional operation of the device at these conditions is not implied. Exposure to maximum rating conditions for extended periods may affect device reliability.

Table 11. Voltage characteristics

Symbol	Ratings	Min	Max	Unit
$V_{DD}–V_{SS}$	External main supply voltage (including V_{DDA}, V_{DD} and V_{BAT})(1)	–0.3	4.0	V
V_{IN}	Input voltage on FT pins(2)	V_{SS}–0.3	V_{DD}+4.0	
	Input voltage on any other pin	V_{SS}–0.3	4.0	
	Input voltage for BOOT0	V_{SS}	9.0	
$\|\Delta V_{DDx}\|$	Variations between different V_{DD} power pins	-	50	mV
$\|V_{SSX} – V_{SS}\|$	Variations between all the different ground pins	-	50	
$V_{ESD(HBM)}$	Electrostatic discharge voltage (human body model)	see *Section 6.3.14: Absolute maximum ratings (electrical sensitivity)*		

1. All main power (V_{DD}, V_{DDA}) and ground (V_{SS}, V_{SSA}) pins must always be connected to the external power supply, in the permitted range.
2. V_{IN} maximum value must always be respected. Refer to *Table 12* for the values of the maximum allowed injected current.

Table 12. Current characteristics

Symbol	Ratings	Max.	Unit
ΣI_{VDD}	Total current into sum of all V_{DD_x} power lines (source)(1)	160	mA
ΣI_{VSS}	Total current out of sum of all V_{SS_x} ground lines (sink)(1)	-160	
I_{VDD}	Maximum current into each V_{DD_x} power line (source)(1)	100	
I_{VSS}	Maximum current out of each V_{SS_x} ground line (sink)(1)	-100	
I_{IO}	Output current sunk by any I/O and control pin	25	
	Output current sourced by any I/O and control pin	-25	
ΣI_{IO}	Total output current sunk by sum of all I/O and control pins (2)	120	
	Total output current sourced by sum of all I/Os and control pins(2)	-120	
$I_{INJ(PIN)}$ (3)	Injected current on FT pins (4)	–5/+0	
	Injected current on NRST and B pins (4)		
$\Sigma I_{INJ(PIN)}$	Total injected current (sum of all I/O and control pins)(5)	±25	

1. All main power (V_{DD}, V_{DDA}) and ground (V_{SS}, V_{SSA}) pins must always be connected to the external power supply, in the permitted range.
2. This current consumption must be correctly distributed over all I/Os and control pins. The total output current must not be sunk/sourced between two consecutive power supply pins referring to high pin count LQFP packages.
3. Negative injection disturbs the analog performance of the device. See note in *Section 6.3.20: 12-bit ADC characteristics*.
4. Positive injection is not possible on these I/Os and does not occur for input voltages lower than the specified maximum value.
5. When several inputs are submitted to a current injection, the maximum $\Sigma I_{INJ(PIN)}$ is the absolute sum of the positive and negative injected currents (instantaneous values).

Table 13. Thermal characteristics

Symbol	Ratings	Value	Unit
T_{STG}	Storage temperature range	–65 to +150	°C
T_J	Maximum junction temperature	125	
T_{LEAD}	Maximum lead temperature during soldering (WLCSP49, LQFP64/100, UFQFPN48, UFBGA100)	see note (1)	

1. Compliant with JEDEC Std J-STD-020D (for small body, Sn-Pb or Pb assembly), the ST ECOPACK® 7191395 specification, and the European directive on Restrictions on Hazardous Substances (ROHS directive 2011/65/EU, July 2011).

6.3 Operating conditions

6.3.1 General operating conditions

Table 14. General operating conditions

Symbol	Parameter	Conditions	Min	Typ	Max	Unit
f_{HCLK}	Internal AHB clock frequency	Power Scale3: Regulator ON, VOS[1:0] bits in PWR_CR register = 0x01	0	-	60	MHz
		Power Scale2: Regulator ON, VOS[1:0] bits in PWR_CR register = 0x10	0	-	84	
f_{PCLK1}	Internal APB1 clock frequency		0	-	42	
f_{PCLK2}	Internal APB2 clock frequency		0	-	84	
V_{DD}	Standard operating voltage		1.7(1)	-	3.6	V
V_{DDA} (2)(3)	Analog operating voltage (ADC limited to 1.2 M samples)	Must be the same potential as V_{DD}(4)	1.7(1)	-	2.4	
	Analog operating voltage (ADC limited to 2.4 M samples)		2.4	-	3.6	
V_{BAT}	Backup operating voltage		1.65	-	3.6	
V_{12}	Regulator ON: 1.2 V internal voltage on V_{CAP_1}/V_{CAP_2} pins	VOS[1:0] bits in PWR_CR register = 0x01 Max frequency 60 MHz	1.08(5)	1.14	1.20(5)	
		VOS[1:0] bits in PWR_CR register = 0x10 Max frequency 84 MHz	1.20(5)	1.26	1.32(5)	
V_{12}	Regulator OFF: 1.2 V external voltage must be supplied on V_{CAP_1}/V_{CAP_2} pins	Max. frequency 60 MHz.	1.1	1.14	1.2	
		Max. frequency 84 MHz.	1.2	1.26	1.32	
V_{IN}	Input voltage on RST and FT pins(6)	$2\ V \leq V_{DD} \leq 3.6\ V$	–0.3	-	5.5	
		$V_{DD} \leq 2\ V$	–0.3	-	5.2	
	Input voltage on BOOT0 pin		0	-	9	
P_D	Maximum allowed package power dissipation for suffix 7(7)	UFQFPN48	-	-	625	mW
		WLCSP49	-	-	392	
		LQFP64	-	-	313	
		LQFP100	-	-	465	
		UFBGA100	-	-	323	

Table 14. General operating conditions (continued)

Symbol	Parameter	Conditions	Min	Typ	Max	Unit
T_A	Ambient temperature for 6 suffix version	Maximum power dissipation	–40	-	85	°C
		Low power dissipation(8)	–40	-	105	
	Ambient temperature for 7 suffix version	Maximum power dissipation	–40	-	105	
		Low power dissipation(8)	–40	-	125	
T_J	Junction temperature range	6 suffix version	–40	-	105	
		7 suffix version	–40	-	125	

1. V_{DD}/V_{DDA} minimum value of 1.7 V with the use of an external power supply supervisor (refer to *Section 3.14.2: Internal reset OFF*).
2. When the ADC is used, refer to *Table 66: ADC characteristics*.
3. If V_{REF+} pin is present, it must respect the following condition: V_{DDA}-V_{REF+} < 1.2 V.
4. It is recommended to power V_{DD} and V_{DDA} from the same source. A maximum difference of 300 mV between V_{DD} and V_{DDA} can be tolerated during power-up and power-down operation.
5. Guaranteed by test in production
6. To sustain a voltage higher than VDD+0.3, the internal Pull-up and Pull-Down resistors must be disabled
7. If T_A is lower, higher P_D values are allowed as long as T_J does not exceed T_{Jmax}.
8. In low power dissipation state, T_A can be extended to this range as long as T_J does not exceed T_{Jmax}.

Table 15. Features depending on the operating power supply range

Operating power supply range	ADC operation	Maximum Flash memory access frequency with no wait states ($f_{Flashmax}$)	Maximum Flash memory access frequency with wait states (1)(2)	I/O operation	Clock output frequency on I/O pins(3)	Possible Flash memory operations
V_{DD} =1.7 to 2.1 V(4)	Conversion time up to 1.2 Msps	20 MHz(5)	84 MHz with 4 wait states	– No I/O compensation	up to 30 MHz	8-bit erase and program operations only
V_{DD} = 2.1 to 2.4 V	Conversion time up to 1.2 Msps	22 MHz	84 MHz with 3 wait states	– No I/O compensation	up to 30 MHz	16-bit erase and program operations
V_{DD} = 2.4 to 2.7 V	Conversion time up to 2.4 Msps	24 MHz	84 MHz with 3 wait states	– I/O compensation works	up to 48 MHz	16-bit erase and program operations
V_{DD} = 2.7 to 3.6 V(6)	Conversion time up to 2.4 Msps	30 MHz	84 MHz with 2 wait states	– I/O compensation works	– up to 84 MHz when V_{DD} = 3.0 to 3.6 V – up to 48 MHz when V_{DD} = 2.7 to 3.0 V	32-bit erase and program operations

1. Applicable only when the code is executed from Flash memory. When the code is executed from RAM, no wait state is required.
2. Thanks to the ART accelerator and the 128-bit Flash memory, the number of wait states given here does not impact the execution speed from Flash memory since the ART accelerator allows to achieve a performance equivalent to 0 wait state program execution.
3. Refer to for frequencies vs. external load.
4. V_{DD}/V_{DDA} minimum value of 1.7 V, with the use of an external power supply supervisor (refer to *Section 3.14.2: Internal reset OFF*).
5. Prefetch is not available. Refer to AN3430 application note for details on how to adjust performance and power.
6. The voltage range for the USB full speed embedded PHY can drop down to 2.7 V. However the electrical characteristics of D- and D+ pins will be degraded between 2.7 and 3 V.

6.3.2 VCAP1/VCAP2 external capacitors

Stabilization for the main regulator is achieved by connecting external capacitor C_{EXT} to the VCAP1 and VCAP2 pin. For packages supporting only 1 VCAP pin, the 2 CEXT capacitors are replaced by a single capacitor.

C_{EXT} is specified in *Table 16*.

Figure 20. External capacitor C_{EXT}

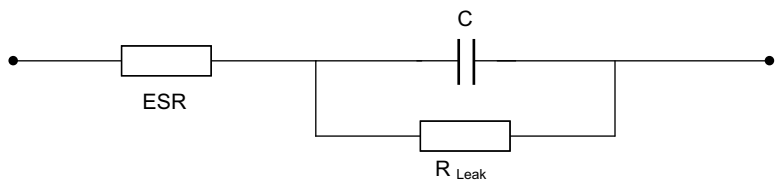

1. Legend: ESR is the equivalent series resistance.

Table 16. VCAP1/VCAP2 operating conditions(1)

Symbol	Parameter	Conditions
CEXT	Capacitance of external capacitor with available VCAP1 and VCAP2 pins	2.2 µF
ESR	ESR of external capacitor with available VCAP1 and VCAP2 pins	< 2 Ω
CEXT	Capacitance of external capacitor with a single VCAP pin available	4.7 µF
ESR	ESR of external capacitor with a single VCAP pin available	< 1 Ω

1. When bypassing the voltage regulator, the two 2.2 µF V_{CAP} capacitors are not required and should be replaced by two 100 nF decoupling capacitors.

6.3.3 Operating conditions at power-up/power-down (regulator ON)

Subject to general operating conditions for T_A.

Table 17. Operating conditions at power-up / power-down (regulator ON)

Symbol	Parameter	Min	Max	Unit
t_{VDD}	V_{DD} rise time rate	20	∞	µs/V
	V_{DD} fall time rate	20	∞	

6.3.4 Operating conditions at power-up / power-down (regulator OFF)

Subject to general operating conditions for T_A.

Table 18. Operating conditions at power-up / power-down (regulator OFF)(1)

Symbol	Parameter	Conditions	Min	Max	Unit
t_{VDD}	V_{DD} rise time rate	Power-up	20	∞	µs/V
	V_{DD} fall time rate	Power-down	20	∞	
t_{VCAP}	V_{CAP_1} and V_{CAP_2} rise time rate	Power-up	20	∞	
	V_{CAP_1} and V_{CAP_2} fall time rate	Power-down	20	∞	

1. To reset the internal logic at power-down, a reset must be applied on pin PA0 when V_{DD} reach below 1.08 V.

Note: This feature is only available for UFBGA100 package.

6.3.5 Embedded reset and power control block characteristics

The parameters given in *Table 19* are derived from tests performed under ambient temperature and V_{DD} supply voltage @ 3.3V.

Table 19. Embedded reset and power control block characteristics

Symbol	Parameter	Conditions	Min	Typ	Max	Unit
V_{PVD}	Programmable voltage detector level selection	PLS[2:0]=000 (rising edge)	2.09	2.14	2.19	V
		PLS[2:0]=000 (falling edge)	1.98	2.04	2.08	
		PLS[2:0]=001 (rising edge)	2.23	2.30	2.37	
		PLS[2:0]=001 (falling edge)	2.13	2.19	2.25	
		PLS[2:0]=010 (rising edge)	2.39	2.45	2.51	
		PLS[2:0]=010 (falling edge)	2.29	2.35	2.39	
		PLS[2:0]=011 (rising edge)	2.54	2.60	2.65	
		PLS[2:0]=011 (falling edge)	2.44	2.51	2.56	
		PLS[2:0]=100 (rising edge)	2.70	2.76	2.82	
		PLS[2:0]=100 (falling edge)	2.59	2.66	2.71	
		PLS[2:0]=101 (rising edge)	2.86	2.93	2.99	
		PLS[2:0]=101 (falling edge)	2.65	2.84	3.02	
		PLS[2:0]=110 (rising edge)	2.96	3.03	3.10	
		PLS[2:0]=110 (falling edge)	2.85	2.93	2.99	
		PLS[2:0]=111 (rising edge)	3.07	3.14	3.21	
		PLS[2:0]=111 (falling edge)	2.95	3.03	3.09	
$V_{PVDhyst}$(2)	PVD hysteresis		-	100	-	mV
$V_{POR/PDR}$	Power-on/power-down reset threshold	Falling edge	1.60(1)	1.68	1.76	V
		Rising edge	1.64	1.72	1.80	
$V_{PDRhyst}$(2)	PDR hysteresis		-	40	-	mV
V_{BOR1}	Brownout level 1 threshold	Falling edge	2.13	2.19	2.24	V
		Rising edge	2.23	2.29	2.33	
V_{BOR2}	Brownout level 2 threshold	Falling edge	2.44	2.50	2.56	
		Rising edge	2.53	2.59	2.63	
V_{BOR3}	Brownout level 3 threshold	Falling edge	2.75	2.83	2.88	
		Rising edge	2.85	2.92	2.97	
$V_{BORhyst}$(2)	BOR hysteresis		-	100	-	mV
$T_{RSTTEMPO}$(2)(3)	POR reset timing		0.5	1.5	3.0	ms

Table 19. Embedded reset and power control block characteristics (continued)

Symbol	Parameter	Conditions	Min	Typ	Max	Unit
I_{RUSH}(2)	InRush current on voltage regulator power-on (POR or wakeup from Standby)		-	160	200	mA
E_{RUSH}(2)	InRush energy on voltage regulator power-on (POR or wakeup from Standby)	V_{DD} = 1.7 V, T_A = 105 °C, I_{RUSH} = 171 mA for 31 µs	-	-	5.4	µC

1. The product behavior is guaranteed by design down to the minimum $V_{POR/PDR}$ value.
2. Guaranteed by design, not tested in production.
3. The reset timing is measured from the power-on (POR reset or wakeup from V_{BAT}) to the instant when first instruction is fetched by the user application code.

6.3.6 Supply current characteristics

The current consumption is a function of several parameters and factors such as the operating voltage, ambient temperature, I/O pin loading, device software configuration, operating frequencies, I/O pin switching rate, program location in memory and executed binary code.
The current consumption is measured as described in *Figure 19: Current consumption measurement scheme*.

All the run-mode current consumption measurements given in this section are performed with a reduced code that gives a consumption equivalent to CoreMark code.

Typical and maximum current consumption

The MCU is placed under the following conditions:

- All I/O pins are in input mode with a static value at VDD or VSS (no load).
- All peripherals are disabled except if it is explicitly mentioned.
- The Flash memory access time is adjusted to both f_{HCLK} frequency and VDD ranges (refer to *Table 15: Features depending on the operating power supply range*).
- The voltage scaling is adjusted to f_{HCLK} frequency as follows:
  - Scale 3 for $f_{HCLK} \leq$ 60 MHz
  - Scale 2 for 60 MHz < $f_{HCLK} \leq$ 84 MHz
- The system clock is HCLK, $f_{PCLK1} = f_{HCLK}/2$, and $f_{PCLK2} = f_{HCLK}$.
- External clock is 4 MHz and PLL is on
- The maximum values are obtained for V_{DD} = 3.6 V and a maximum ambient temperature (T_A), and the typical values for T_A= 25 °C and V_{DD} = 3.3 V unless otherwise specified.

Table 20. Typical and maximum current consumption, code with data processing (ART accelerator disabled) running from SRAM - V_{DD} = 1.7 V

Symbol	Parameter	Conditions	f_{HCLK} (MHz)	Typ	Max(1)			Unit
				T_A= 25 °C	T_A= 25 °C	T_A=85 °C	T_A=105 °C	
I_{DD}	Supply current in **Run mode**	External clock, all peripherals enabled(2)(3)	84	21.8	23.1	24.1	25.3(4)	mA
			60	15.8	16.5	17.5	18.7	
			40	11.4	11.9	12.9	13.9	
			20	6.0	6.3	7.3	8.3	
		External clock, all peripherals disabled(3)	84	12.7	13.5	14.5	16.3(4)	
			60	9.2	10.5	11.5	12.8	
			40	6.7	7.1	8.1	9.1	
			20	3.6	3.8	4.8	5.8	

1. Guaranteed by characterization, not tested in production unless otherwise specified
2. When analog peripheral blocks such as ADC, HSE, LSE, HSI, or LSI are ON, an additional power consumption has to be considered.
3. When the ADC is ON (ADON bit set in the ADC_CR2 register), add an additional power consumption of 1.6 mA for the analog part.
4. Tested in production.

Table 21. Typical and maximum current consumption, code with data processing (ART accelerator disabled) running from SRAM

Symbol	Parameter	Conditions	f_{HCLK} (MHz)	Typ	Max(1)			Unit
					T_A= 25 °C	T_A=85 °C	T_A=105 °C	
I_{DD}	Supply current in **Run mode**	External clock, all peripherals enabled(2)(3)	84	22.0	23.1	24.1	25.3	mA
			60	16.0	16.9	17.9	19.8	
			40	11.6	12.1	13.1	14.1	
			20	6.2	6.5	7.5	8.5	
		External clock, all peripherals disabled(3)	84	12.9	14.0	15.0	16.3	
			60	9.5	10.5	11.5	12.8	
			40	6.9	7.3	8.3	9.3	
			20	3.8	4.0	5.0	6.0	

1. Guaranteed by characterization, not tested in production unless otherwise specified
2. When analog peripheral blocks such as ADC, HSE, LSE, HSI, or LSI are ON, an additional power consumption has to be considered.
3. When the ADC is ON (ADON bit set in the ADC_CR2 register), add an additional power consumption of 1.6 mA for the analog part.

Table 22. Typical and maximum current consumption in run mode, code with data processing (ART accelerator enabled except prefetch) running from Flash memory- V_{DD} = 1.7 V

Symbol	Parameter	Conditions	f_{HCLK} (MHz)	Typ	Max(1)			Unit
					T_A = 25 °C	T_A = 85 °C	T_A = 105 °C	
I_{DD}	Supply current in **Run mode**	External clock, all peripherals enabled(2)(3)	84	23.2	24.5	25.6	26.6	mA
			60	15.1	16.3	17.4	18.4	
			40	10.8	12.1	13.2	14.2	
			30	8.8	10.0	11.1	12.2	
			20	6.9	8.0	9.0	10.1	
		External clock, all peripherals disabled(3)	84	12.3	13.6	14.7	15.7	
			60	8.2	9.4	10.5	11.5	
			40	6.0	7.3	8.3	9.4	
			30	4.9	6.2	7.2	8.3	
			20	4.0	5.1	6.1	7.2	

1. Guaranteed by characterization, not tested in production unless otherwise specified.
2. Add an additional power consumption of 1.6 mA per ADC for the analog part. In applications, this consumption occurs only while the ADC is ON (ADON bit is set in the ADC_CR2 register).
3. When the ADC is ON (ADON bit set in the ADC_CR2), add an additional power consumption of 1.6mA per ADC for the analog part.

Table 23. Typical and maximum current consumption in run mode, code with data processing (ART accelerator enabled except prefetch) running from Flash memory - V_{DD} = 3.3 V

Symbol	Parameter	Conditions	f_{HCLK} (MHz)	Typ	Max(1)			Unit
					T_A = 25 °C	T_A = 85 °C	T_A = 105 °C	
I_{DD}	Supply current in **Run mode**	External clock, all peripherals enabled(2)(3)	84	23.4	24.7	25.8	26.8	mA
			60	15.3	16.5	17.6	18.6	
			40	11.0	12.3	13.4	14.4	
			30	9.0	10.2	11.3	12.4	
			20	7.1	8.2	9.2	10.3	
		External clock, all peripherals disabled(3)	84	12.5	13.8	14.9	15.9	
			60	8.4	9.6	10.7	11.7	
			40	6.2	7.5	8.5	9.6	
			30	5.1	6.4	7.4	8.5	
			20	4.2	5.3	6.3	7.4	

1. Guaranteed by characterization, not tested in production unless otherwise specified.
2. Add an additional power consumption of 1.6 mA per ADC for the analog part. In applications, this consumption occurs only while the ADC is ON (ADON bit is set in the ADC_CR2 register).
3. When the ADC is ON (ADON bit set in the ADC_CR2), add an additional power consumption of 1.6mA per ADC for the analog part.

Table 24. Typical and maximum current consumption in run mode, code with data processing (ART accelerator disabled) running from Flash memory

Symbol	Parameter	Conditions	f_{HCLK} (MHz)	Typ	Max(1)			Unit
					T_A = 25 °C	T_A = 85 °C	T_A = 105 °C	
I_{DD}	Supply current in **Run mode**	External clock, all peripherals enabled(2)(3)	84	31.1	32.2	34.3	36.3	mA
			60	21.7	22.1	23.2	24.2	
			40	15.5	16.1	17.1	18.1	
			30	12.6	13.1	14.1	15.1	
			20	9.8	10.1	11.1	12.1	
		External clock, all peripherals disabled(3)	84	20.2	21.3	23.4	25.4	
			60	14.9	15.3	16.3	17.3	
			40	10.6	11.2	12.2	13.3	
			30	8.8	9.2	10.2	11.2	
			20	6.9	7.2	8.2	9.2	

1. Guaranteed by characterization, not tested in production unless otherwise specified.
2. Add an additional power consumption of 1.6 mA per ADC for the analog part. In applications, this consumption occurs only while the ADC is ON (ADON bit is set in the ADC_CR2 register).
3. When the ADC is ON (ADON bit set in the ADC_CR2), add an additional power consumption of 1.6mA per ADC for the analog part.

Table 25. Typical and maximum current consumption in run mode, code with data processing (ART accelerator enabled with prefetch) running from Flash memory

Symbol	Parameter	Conditions	f_{HCLK} (MHz)	Typ	Max(1)			Unit
					T_A = 25 °C	T_A = 85 °C	T_A = 105 °C	
I_{DD}	Supply current in **Run mode**	External clock, all peripherals enabled(2)(3)	84	32.5	33.3	34.3	35.4	mA
			60	22.2	23.3	24.3	25.3	
			40	16.0	17.1	18.1	19.2	
			30	12.9	14.1	15.1	16.1	
			20	10.2	11.1	12.1	13.1	
		External clock, all peripherals disabled(3)	84	21.6	22.4	23.5	24.5	
			60	15.3	16.4	17.4	18.4	
			40	11.2	12.3	13.3	14.3	
			30	9.0	10.2	11.2	12.3	
			20	7.3	8.2	9.2	10.2	

1. Guaranteed by characterization, not tested in production unless otherwise specified.
2. Add an additional power consumption of 1.6 mA per ADC for the analog part. In applications, this consumption occurs only while the ADC is ON (ADON bit is set in the ADC_CR2 register).
3. When the ADC is ON (ADON bit set in the ADC_CR2), add an additional power consumption of 1.6mA per ADC for the analog part.

Table 26. Typical and maximum current consumption in Sleep mode

Symbol	Parameter	Conditions	f_{HCLK} (MHz)	Typ	Max(1)			Unit
					T_A = 25 °C	T_A = 85 °C	T_A = 105 °C	
I_{DD}	Supply current in **Sleep** mode	External clock, all peripherals enabled(2)(3)	84	16.6	17.4	18.4	19.5	mA
			60	10.8	11.2	12.3	13.3	
			40	8.3	9.0	10.0	11.0	
			30	6.8	7.1	8.1	9.1	
			20	5.9	6.1	7.1	8.1	
		External clock, all peripherals disabled(3)(4)	84	5.3	6.1	7.1	8.2	
			60	3.7	4.1	5.1	6.1	
			40	2.9	3.1	4.1	5.1	
			30	2.7	3.1	4.1	5.1	
			20	2.7	3.1	4.1	5.1	

1. Guaranteed by characterization, not tested in production unless otherwise specified.
2. Add an additional power consumption of 1.6 mA per ADC for the analog part. In applications, this consumption occurs only while the ADC is ON (ADON bit is set in the ADC_CR2 register).
3. When the ADC is ON (ADON bit set in the ADC_CR2 register), add an additional power consumption of 1.6 mA for the analog part.
4. Same current consumption for f_{HCLK} at 30 MHz and 20 MHz due to VCO running slower at 30 MHz.

Table 27. Typical and maximum current consumptions in Stop mode - V_{DD}=1.8 V

Symbol	Parameter	Conditions	Typ	Max(1)			Unit
			T_A = 25 °C	T_A = 25 °C	T_A = 85 °C	T_A = 105 °C	
I_{DD_STOP}	Main regulator usage	Flash in Stop mode, all oscillators OFF, no independent watchdog	109	135	440	650	µA
	Low power regulator usage		41	65	310	530(2)	
	Main regulator usage	Flash in Deep power down mode, all oscillators OFF, no independent watchdog	72	95	345	530	
	Low power regulator usage		12	36	260	510(2)	
	Low power low voltage regulator usage		10	27	230	460	

1. Guaranteed by characterization, not tested in production.
2. Guaranteed by test in production.

Table 28. Typical and maximum current consumption in Stop mode - V_{DD}=3.3 V

Symbol	Parameter	Conditions	Typ	Max(1)			Unit
			T_A = 25 °C	T_A = 25 °C	T_A = 85 °C	T_A = 105 °C	
I_{DD_STOP}	Main regulator usage	Flash in Stop mode, all oscillators OFF, no independent watchdog	111	140	450	670	µA
	Low power regulator usage		42	65	330	560	
	Main regulator usage	Flash in Deep power down mode, all oscillators OFF, no independent watchdog	73	100	360	560	
	Low power regulator usage		12	36	270	520	
	Low power low voltage regulator usage		10	28	230	470	

1. Guaranteed by characterization, not tested in production.

Table 29. Typical and maximum current consumption in Standby mode - V_{DD}=1.8 V

Symbol	Parameter	Conditions	Typ(1)	Max(2)			Unit
			T_A = 25 °C	T_A = 25 °C	T_A = 85 °C	T_A = 105 °C	
I_{DD_STBY}	Supply current in Standby mode	Low-speed oscillator (LSE) and RTC ON	2.4	4.0	12.0	24.0	µA
		RTC and LSE OFF	1.8	3.0(3)	11.0	23.0(3)	

1. When the PDR is OFF (internal reset is OFF), the typical current consumption is reduced by 1.2 µA.
2. Guaranteed by characterization, not tested in production unless otherwise specified.
3. Guaranteed by test in production.

Table 30. Typical and maximum current consumption in Standby mode - V_{DD}=3.3 V

Symbol	Parameter	Conditions	Typ(1)	Max(2)			Unit
			T_A = 25 °C	T_A = 25 °C	T_A = 85 °C	T_A = 105 °C	
I_{DD_STBY}	Supply current in Standby mode	Low-speed oscillator (LSE) and RTC ON	2.8	5.0	14.0	28.0	µA
		RTC and LSE OFF	2.1	4.0(3)	13.0	27.0(3)	

1. When the PDR is OFF (internal reset is OFF), the typical current consumption is reduced by 1.2 µA.
2. Guaranteed by characterization, not tested in production unless otherwise specified.
3. Guaranteed by test in production.

Table 31. Typical and maximum current consumptions in V_{BAT} mode

Symbol	Parameter	Conditions[1]	Typ			Max[2]		Unit
			T_A = 25 °C			T_A = 85 °C	T_A = 105 °C	
			V_{BAT} = 1.7 V	V_{BAT}= 2.4 V	V_{BAT} = 3.3 V	V_{BAT} = 3.6 V		
I_{DD_VBAT}	Backup domain supply current	Low-speed oscillator (LSE) and RTC ON	0.66	0.76	0.97	3.0	5.0	µA
		RTC and LSE OFF	0.1	0.1	0.1	2.0	4.0	

1. Crystal used: Abracon ABS07-120-32.768 kHz-T with a C_L of 6 pF for typical values.
2. Guaranteed by characterization, not tested in production.

Figure 21. Typical V_{BAT} current consumption (LSE and RTC ON)

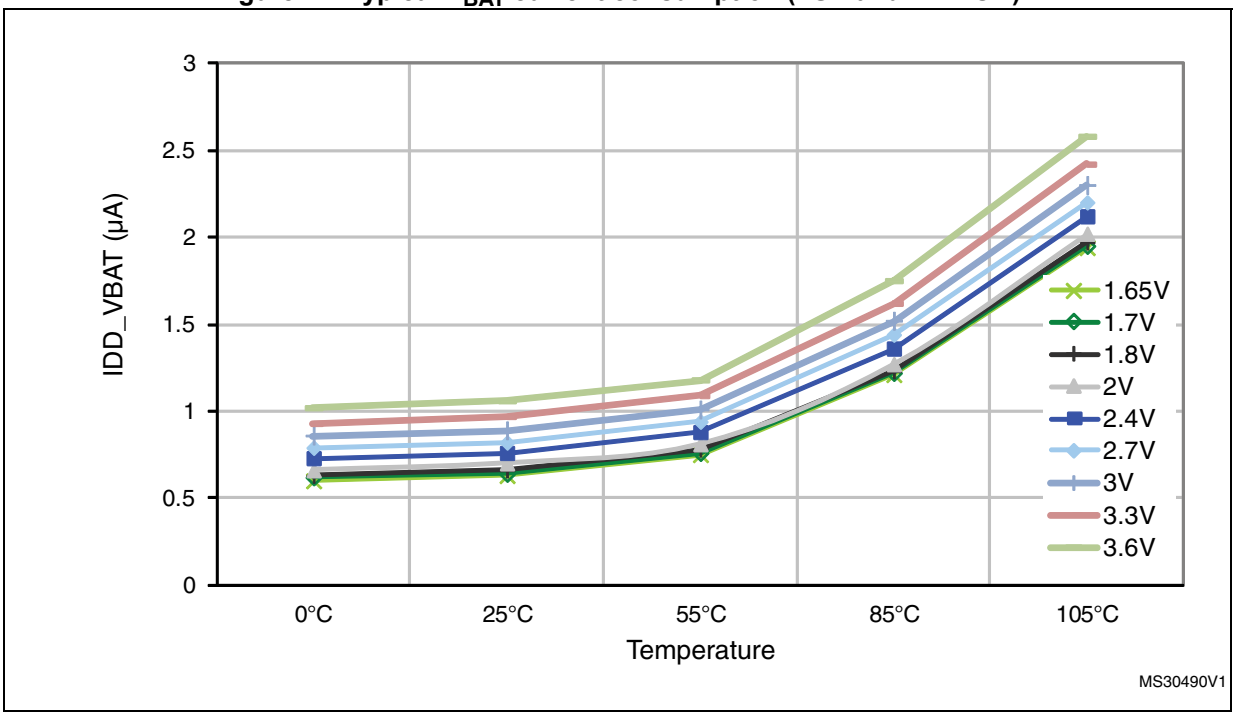

I/O system current consumption

The current consumption of the I/O system has two components: static and dynamic.

I/O static current consumption

All the I/Os used as inputs with pull-up generate current consumption when the pin is externally held low. The value of this current consumption can be simply computed by using the pull-up/pull-down resistors values given in *Table 54: I/O static characteristics*.

For the output pins, any external pull-down or external load must also be considered to estimate the current consumption.

Additional I/O current consumption is due to I/Os configured as inputs if an intermediate voltage level is externally applied. This current consumption is caused by the input Schmitt trigger circuits used to discriminate the input value. Unless this specific configuration is

required by the application, this supply current consumption can be avoided by configuring these I/Os in analog mode. This is notably the case of ADC input pins which should be configured as analog inputs.

Caution: Any floating input pin can also settle to an intermediate voltage level or switch inadvertently, as a result of external electromagnetic noise. To avoid current consumption related to floating pins, they must either be configured in analog mode, or forced internally to a definite digital value. This can be done either by using pull-up/down resistors or by configuring the pins in output mode.

I/O dynamic current consumption

In addition to the internal peripheral current consumption (see *Table 33: Peripheral current consumption*), the I/Os used by an application also contribute to the current consumption. When an I/O pin switches, it uses the current from the MCU supply voltage to supply the I/O pin circuitry and to charge/discharge the capacitive load (internal or external) connected to the pin:

$$I_{SW} = V_{DD} \times f_{SW} \times C$$

where

I_{SW} is the current sunk by a switching I/O to charge/discharge the capacitive load

V_{DD} is the MCU supply voltage

f_{SW} is the I/O switching frequency

C is the total capacitance seen by the I/O pin: $C = C_{INT} + C_{EXT}$

The test pin is configured in push-pull output mode and is toggled by software at a fixed frequency.

Table 32. Switching output I/O current consumption

Symbol	Parameter	Conditions[1]	I/O toggling frequency (f_{SW})	Typ	Unit
IDDIO	I/O switching current	V_{DD} = 3.3 V C = C_{INT}	2 MHz	0.05	mA
			8 MHz	0.15	
			25 MHz	0.45	
			50 MHz	0.85	
			60 MHz	1.00	
			84 MHz	1.40	
		V_{DD} = 3.3 V C_{EXT} = 0 pF C = C_{INT} + C_{EXT} + C_S	2 MHz	0.10	
			8 MHz	0.35	
			25 MHz	1.05	
			50 MHz	2.20	
			60 MHz	2.40	
			84 MHz	3.55	
		V_{DD} = 3.3 V C_{EXT} =10 pF C = C_{INT} + C_{EXT} + C_S	2 MHz	0.20	
			8 MHz	0.65	
			25 MHz	1.85	
			50 MHz	2.45	
			60 MHz	4.70	
			84 MHz	8.80	
		V_{DD} = 3.3 V C_{EXT} = 22 pF C = C_{INT} + C_{EXT} + C_S	2 MHz	0.25	
			8 MHz	1.00	
			25 MHz	3.45	
			50 MHz	7.15	
			60 MHz	11.55	
		V_{DD} = 3.3 V C_{EXT} = 33 pF C = C_{INT} + C_{EXT} + C_S	2 MHz	0.32	
			8 MHz	1.27	
			25 MHz	3.88	
			50 MHz	12.34	

1. C_S is the PCB board capacitance including the pad pin. C_S = 7 pF (estimated value).

On-chip peripheral current consumption

The MCU is placed under the following conditions:

- At startup, all I/O pins are in analog input configuration.
- All peripherals are disabled unless otherwise mentioned.
- The ART accelerator is ON.
- Voltage Scale 2 mode selected, internal digital voltage V12 = 1.26 V.
- HCLK is the system clock at 84 MHz. $f_{PCLK1} = f_{HCLK}/2$, and $f_{PCLK2} = f_{HCLK}$.
  The given value is calculated by measuring the difference of current consumption
  - with all peripherals clocked off
  - with only one peripheral clocked on
- Ambient operating temperature is 25 °C and V_{DD}=3.3 V.

Table 33. Peripheral current consumption

Peripheral		I_{DD} (typ)	Unit
AHB1 (up to 84MHz)	GPIOA	1.55	µA/MHz
	GPIOB	1.55	
	GPIOC	1.55	
	GPIOD	1.55	
	GPIOE	1.55	
	GPIOH	1.55	
	CRC	0.36	
	DMA1	20.24	
	DMA2	21.07	
APB1 (up to 42MHz)	TIM2	11.19	µA/MHz
	TIM3	8.57	
	TIM4	8.33	
	TIM5	11.19	
	PWR	0.71	
	USART2	3.33	
	I2C1/2/3	3.10	
	SPI2(1)	2.62	
	SPI3(1)	2.86	
	I2S2	1.90	
	I2S3	1.67	
	WWDG	0.71	
AHB2 (up to 84MHz)	OTG_FS	23.93	µA/MHz

Table 33. Peripheral current consumption (continued)

Peripheral		I_{DD} (typ)	Unit
APB2 (up to 84MHz)	TIM1	5.71	µA/MHz
	TIM9	2.86	
	TIM10	1.79	
	TIM11	2.02	
	ADC1(2)	2.98	
	SPI1	1.19	
	USART1	3.10	
	USART6	2.86	
	SDIO	5.95	
	SPI4	1.31	
	SYSCFG	0.71	

1. I2SMOD bit set in SPI_I2SCFGR register, and then the I2SE bit set to enable I2S peripheral.
2. When the ADC is ON (ADON bit set in the ADC_CR2 register), add an additional power consumption of 1.6 mA for the analog part.

6.3.7 Wakeup time from low-power modes

The wakeup times given in *Table 34* are measured starting from the wakeup event trigger up to the first instruction executed by the CPU:

- For Stop or Sleep modes: the wakeup event is WFE.
- WKUP (PA0) pin is used to wakeup from Standby, Stop and Sleep modes.

All timings are derived from tests performed under ambient temperature and V_{DD}=3.3 V.

Table 34. Low-power mode wakeup timings(1)

Symbol	Parameter	Min(1)	Typ(1)	Max(1)	Unit
$t_{WUSLEEP}$(2)	Wakeup from Sleep mode	-	4	6	CPU clock cycle
t_{WUSTOP}(2)	Wakeup from Stop mode, usage of main regulator	-	13.5	14.5	µs
	Wakeup from Stop mode, usage of main regulator, Flash memory in Deep power down mode	-	105	111	
	Wakeup from Stop mode, regulator in low power mode	-	21	33	
	Wakeup from Stop mode, regulator in low power mode, Flash memory in Deep power down mode	-	113	130	
$t_{WUSTDBY}$(2)(3)	Wakeup from Standby mode	-	314	407	µs

1. Guaranteed by characterization, not tested in production.
2. The wakeup times are measured from the wakeup event to the point in which the application code reads the first instruction.
3. $t_{WUSTDBY}$ maximum value is given at –40 °C.

6.3.8 External clock source characteristics

High-speed external user clock generated from an external source

In bypass mode the HSE oscillator is switched off and the input pin is a standard I/O. The external clock signal has to respect the *Table 54*. However, the recommended clock input waveform is shown in *Figure 22*.

The characteristics given in *Table 35* result from tests performed using an high-speed external clock source, and under ambient temperature and supply voltage conditions summarized in *Table 14*.

Table 35. High-speed external user clock characteristics

Symbol	Parameter	Conditions	Min	Typ	Max	Unit
f_{HSE_ext}	External user clock source frequency(1)		1	-	50	MHz
V_{HSEH}	OSC_IN input pin high level voltage		$0.7V_{DD}$	-	V_{DD}	V
V_{HSEL}	OSC_IN input pin low level voltage		V_{SS}	-	$0.3V_{DD}$	
$t_{w(HSE)}$ $t_{w(HSE)}$	OSC_IN high or low time(1)		5	-	-	ns
$t_{r(HSE)}$ $t_{f(HSE)}$	OSC_IN rise or fall time(1)		-	-	10	
$C_{in(HSE)}$	OSC_IN input capacitance(1)		-	5	-	pF
$DuCy_{(HSE)}$	Duty cycle		45	-	55	%
I_L	OSC_IN Input leakage current	$V_{SS} \leq V_{IN} \leq V_{DD}$	-	-	±1	µA

1. Guaranteed by design, not tested in production.

Low-speed external user clock generated from an external source

In bypass mode the LSE oscillator is switched off and the input pin is a standard I/O. The external clock signal has to respect the *Table 54*. However, the recommended clock input waveform is shown in *Figure 23*.

The characteristics given in *Table 36* result from tests performed using an low-speed external clock source, and under ambient temperature and supply voltage conditions summarized in *Table 14*.

Table 36. Low-speed external user clock characteristics

Symbol	Parameter	Conditions	Min	Typ	Max	Unit
f_{LSE_ext}	User External clock source frequency(1)		-	32.768	1000	kHz
V_{LSEH}	OSC32_IN input pin high level voltage		$0.7V_{DD}$	-	V_{DD}	V
V_{LSEL}	OSC32_IN input pin low level voltage		V_{SS}	-	$0.3V_{DD}$	
$t_{w(LSE)}$ $t_{f(LSE)}$	OSC32_IN high or low time(1)		450	-	-	ns
$t_{r(LSE)}$ $t_{f(LSE)}$	OSC32_IN rise or fall time(1)		-	-	50	
$C_{in(LSE)}$	OSC32_IN input capacitance(1)		-	5	-	pF
$DuCy_{(LSE)}$	Duty cycle		30	-	70	%
I_L	OSC32_IN Input leakage current	$V_{SS} \leq V_{IN} \leq V_{DD}$	-	-	±1	µA

1. Guaranteed by design, not tested in production.

Figure 22. High-speed external clock source AC timing diagram

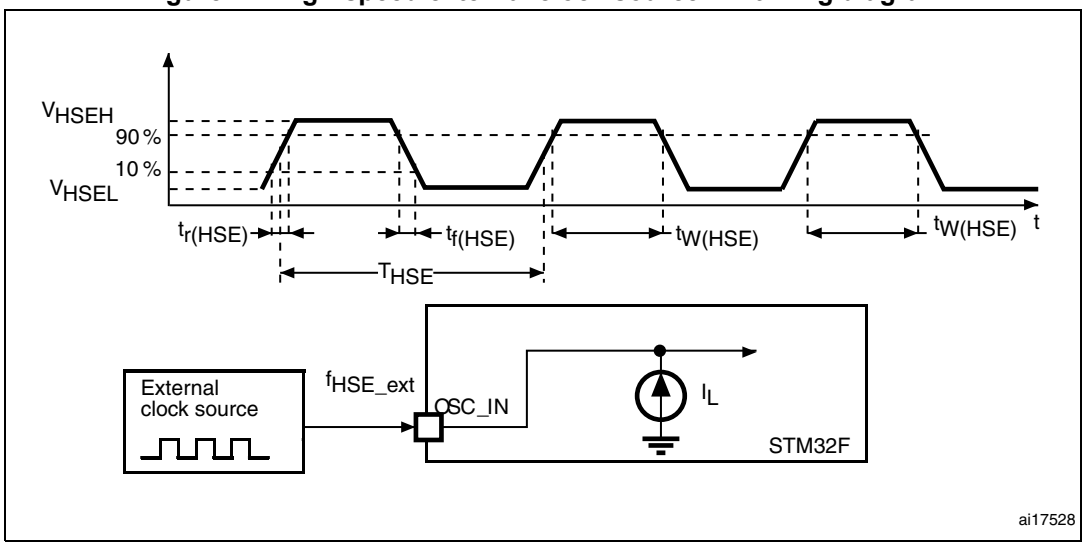

Figure 23. Low-speed external clock source AC timing diagram

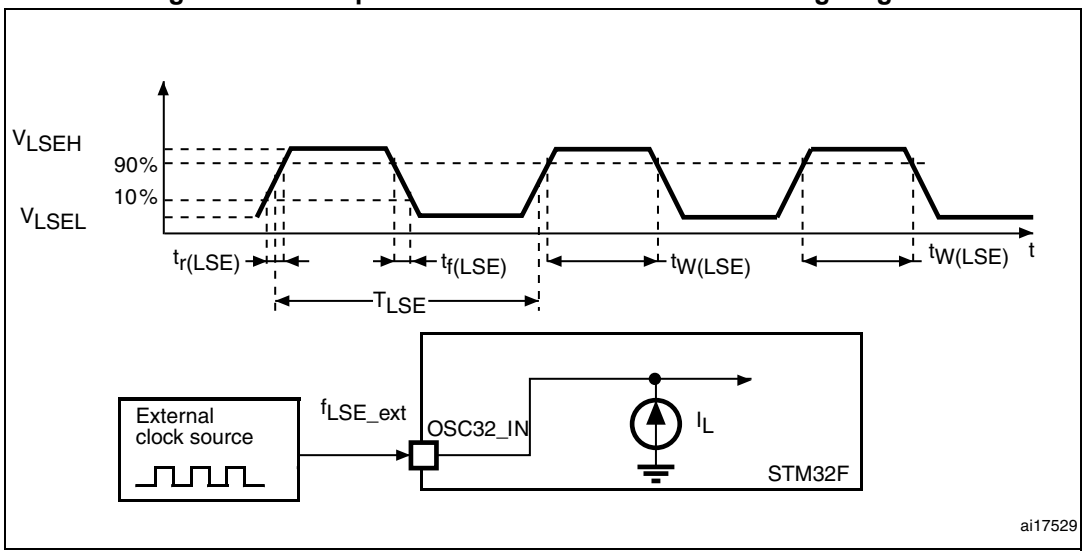

High-speed external clock generated from a crystal/ceramic resonator

The high-speed external (HSE) clock can be supplied with a 4 to 26 MHz crystal/ceramic resonator oscillator. All the information given in this paragraph are based on characterization results obtained with typical external components specified in *Table 37*. In the application, the resonator and the load capacitors have to be placed as close as possible to the oscillator pins in order to minimize output distortion and startup stabilization time. Refer to the crystal resonator manufacturer for more details on the resonator characteristics (frequency, package, accuracy).

Table 37. HSE 4-26 MHz oscillator characteristics(1)

Symbol	Parameter	Conditions	Min	Typ	Max	Unit
f_{OSC_IN}	Oscillator frequency		4	-	26	MHz
R_F	Feedback resistor		-	200	-	kΩ
I_{DD}	HSE current consumption	V_{DD}=3.3 V, ESR= 30 Ω, C_L=5 pF @25 MHz	-	450	-	µA
		V_{DD}=3.3 V, ESR= 30 Ω, C_L=10 pF @25 MHz	-	530	-	
$G_{m_crit_max}$	Maximum critical crystal g_m	Startup	-	-	1	mA/V
$t_{SU(HSE)}$(2)	Startup time	V_{DD} is stabilized	-	2	-	ms

1. Guaranteed by design, not tested in production.
2. $t_{SU(HSE)}$ is the startup time measured from the moment it is enabled (by software) to a stabilized 8 MHz oscillation is reached. This value is measured for a standard crystal resonator and it can vary significantly with the crystal manufacturer

For C_{L1} and C_{L2}, it is recommended to use high-quality external ceramic capacitors in the 5 pF to 25 pF range (typ.), designed for high-frequency applications, and selected to match the requirements of the crystal or resonator (see *Figure 24*). C_{L1} and C_{L2} are usually the same size. The crystal manufacturer typically specifies a load capacitance which is the

series combination of C_{L1} and C_{L2}. PCB and MCU pin capacitance must be included (10 pF can be used as a rough estimate of the combined pin and board capacitance) when sizing C_{L1} and C_{L2}.

Note: For information on selecting the crystal, refer to the application note AN2867 "Oscillator design guide for ST microcontrollers" available from the ST website www.st.com.

Figure 24. Typical application with an 8 MHz crystal

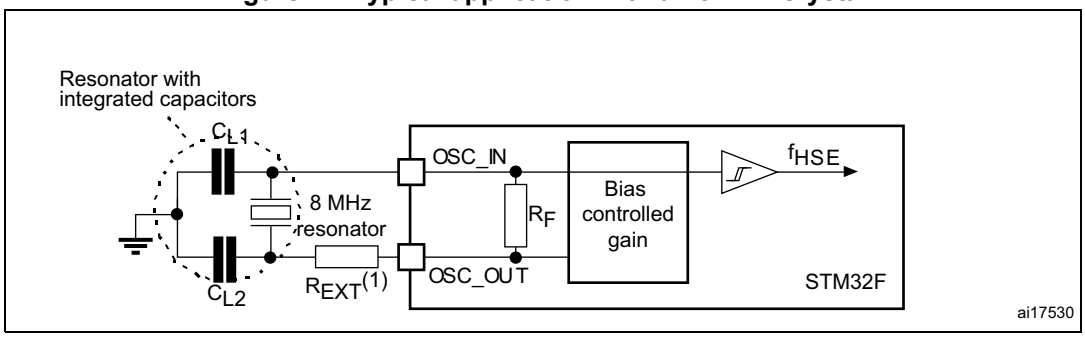

1. R_{EXT} value depends on the crystal characteristics.

Low-speed external clock generated from a crystal/ceramic resonator

The low-speed external (LSE) clock can be supplied with a 32.768 kHz crystal/ceramic resonator oscillator. All the information given in this paragraph are based on characterization results obtained with typical external components specified in *Table 38*. In the application, the resonator and the load capacitors have to be placed as close as possible to the oscillator pins in order to minimize output distortion and startup stabilization time. Refer to the crystal resonator manufacturer for more details on the resonator characteristics (frequency, package, accuracy).

Table 38. LSE oscillator characteristics (f_{LSE} = 32.768 kHz) (1)

Symbol	Parameter	Conditions	Min	Typ	Max	Unit
R_F	Feedback resistor		-	18.4	-	MΩ
I_{DD}	LSE current consumption		-	-	1	µA
G_m_crit_max	Maximum critical crystal g_m	Startup	-	-	0.56	µA/V
$t_{SU(LSE)}$(2)	startup time	V_{DD} is stabilized	-	2	-	s

1. Guaranteed by design, not tested in production.
2. $t_{SU(LSE)}$ is the startup time measured from the moment it is enabled (by software) to a stabilized 32.768 kHz oscillation is reached. This value is guaranteed by characterization and not tested in production. It is measured for a standard crystal resonator and it can vary significantly with the crystal manufacturer.

Note: For information on selecting the crystal, refer to the application note AN2867 "Oscillator design guide for ST microcontrollers" available from the ST website www.st.com.

Figure 25. Typical application with a 32.768 kHz crystal

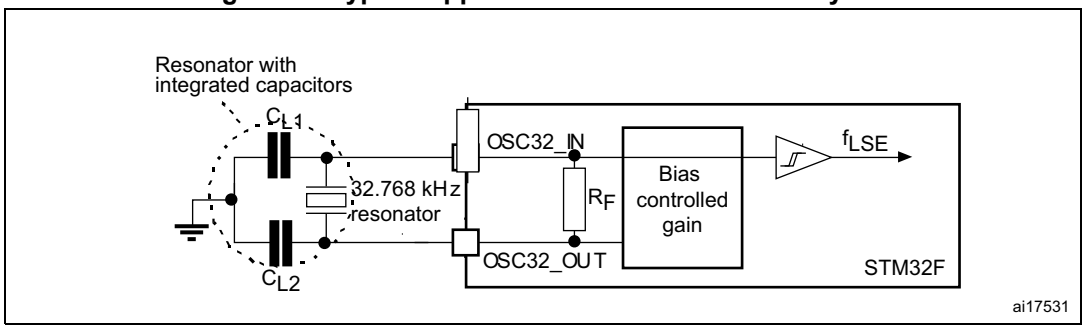

6.3.9 Internal clock source characteristics

The parameters given in *Table 39* and *Table 40* are derived from tests performed under ambient temperature and V_{DD} supply voltage conditions summarized in *Table 14*.

High-speed internal (HSI) RC oscillator

Table 39. HSI oscillator characteristics (1)

Symbol	Parameter	Conditions		Min	Typ	Max	Unit
f_{HSI}	Frequency			-	16	-	MHz
ACC_{HSI}	Accuracy of the HSI oscillator	User-trimmed with the RCC_CR register(2)		-	-	1	%
		Factory-calibrated	T_A = –40 to 105 °C(3)	–8	-	4.5	%
			T_A = –10 to 85 °C(3)	–4	-	4	%
			T_A = 25 °C	–1	-	1	%
$t_{su(HSI)}$(2)	HSI oscillator startup time			-	2.2	4	µs
$I_{DD(HSI)}$(2)	HSI oscillator power consumption			-	60	80	µA

1. V_{DD} = 3.3 V, T_A = –40 to 105 °C unless otherwise specified.
2. Guaranteed by design, not tested in production
3. Guaranteed by characterization, not tested in production

Figure 26. ACC_{HSI} versus temperature

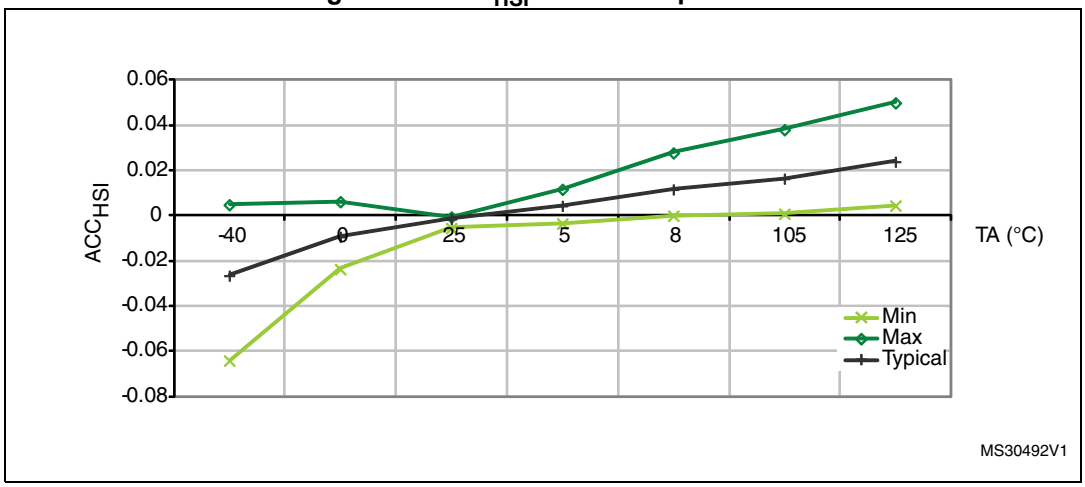

1. Guaranteed by characterization, not tested in production.

Low-speed internal (LSI) RC oscillator

Table 40. LSI oscillator characteristics (1)

Symbol	Parameter	Min	Typ	Max	Unit
f_{LSI}(2)	Frequency	17	32	47	kHz
$t_{su(LSI)}$(3)	LSI oscillator startup time	-	15	40	µs
$I_{DD(LSI)}$(3)	LSI oscillator power consumption	-	0.4	0.6	µA

1. V_{DD} = 3 V, T_A = –40 to 105 °C unless otherwise specified.
2. Guaranteed by characterization, not tested in production.
3. Guaranteed by design, not tested in production.

Figure 27. ACC_{LSI} versus temperature

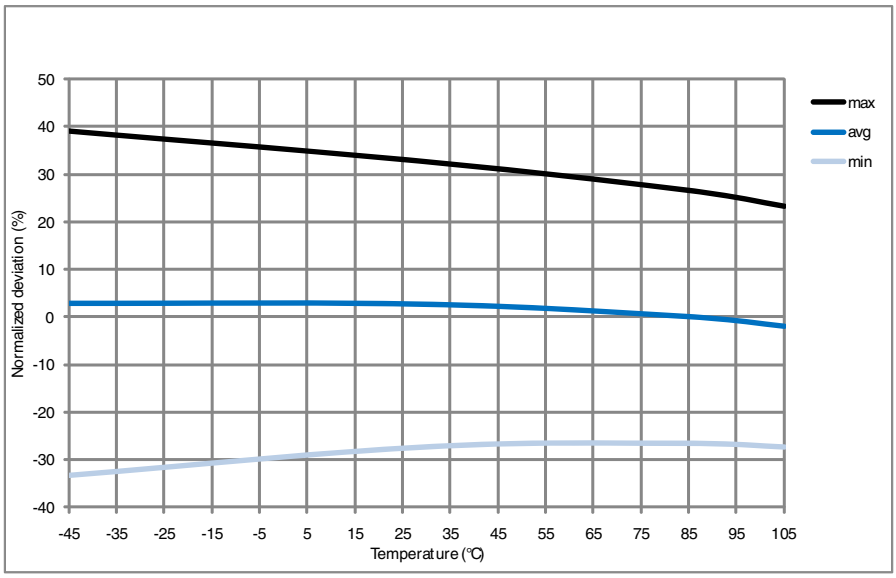

MS19013V1

6.3.10 PLL characteristics

The parameters given in *Table 41* and *Table 42* are derived from tests performed under temperature and V_{DD} supply voltage conditions summarized in *Table 14*.

Table 41. Main PLL characteristics

Symbol	Parameter	Conditions		Min	Typ	Max	Unit
f_{PLL_IN}	PLL input clock(1)			0.95(2)	1	2.10	MHz
f_{PLL_OUT}	PLL multiplier output clock			24	-	84	MHz
f_{PLL48_OUT}	48 MHz PLL multiplier output clock			-	48	75	MHz
f_{VCO_OUT}	PLL VCO output			192	-	432	MHz
t_{LOCK}	PLL lock time	VCO freq = 192 MHz		75	-	200	µs
		VCO freq = 432 MHz		100	-	300	
Jitter(3)	Cycle-to-cycle jitter	System clock 84 MHz	RMS	-	25	-	ps
			peak to peak	-	±150	-	
	Period Jitter		RMS	-	15	-	
			peak to peak	-	±200	-	

Table 41. Main PLL characteristics (continued)

Symbol	Parameter	Conditions	Min	Typ	Max	Unit
$I_{DD(PLL)}$(4)	PLL power consumption on VDD	VCO freq = 192 MHz VCO freq = 432 MHz	0.15 0.45	-	0.40 0.75	mA
$I_{DDA(PLL)}$(4)	PLL power consumption on VDDA	VCO freq = 192 MHz VCO freq = 432 MHz	0.30 0.55	-	0.40 0.85	

1. Take care of using the appropriate division factor M to obtain the specified PLL input clock values. The M factor is shared between PLL and PLLI2S.
2. Guaranteed by design, not tested in production.
3. The use of 2 PLLs in parallel could degraded the Jitter up to +30%.
4. Guaranteed by characterization, not tested in production.

Table 42. PLLI2S (audio PLL) characteristics

Symbol	Parameter	Conditions		Min	Typ	Max	Unit
f_{PLLI2S_IN}	PLLI2S input clock(1)			0.95(2)	1	2.10	MHz
f_{PLLI2S_OUT}	PLLI2S multiplier output clock			-	-	216	
f_{VCO_OUT}	PLLI2S VCO output			192	-	432	
t_{LOCK}	PLLI2S lock time	VCO freq = 192 MHz		75	-	200	µs
		VCO freq = 432 MHz		100	-	300	
Jitter(3)	Master I2S clock jitter	Cycle to cycle at 12.288 MHz on 48 KHz period, N=432, R=5	RMS	-	90	-	ps
			peak to peak	-	±280	-	
		Average frequency of 12.288 MHz N = 432, R = 5 on 1000 samples		-	90	-	
	WS I2S clock jitter	Cycle to cycle at 48 KHz on 1000 samples		-	400	-	
$I_{DD(PLLI2S)}$(4)	PLLI2S power consumption on V_{DD}	VCO freq = 192 MHz VCO freq = 432 MHz		0.15 0.45	-	0.40 0.75	mA
$I_{DDA(PLLI2S)}$(4)	PLLI2S power consumption on V_{DDA}	VCO freq = 192 MHz VCO freq = 432 MHz		0.30 0.55	-	0.40 0.85	

1. Take care of using the appropriate division factor M to have the specified PLL input clock values.
2. Guaranteed by design, not tested in production.
3. Value given with main PLL running.
4. Guaranteed by characterization, not tested in production.

6.3.11 PLL spread spectrum clock generation (SSCG) characteristics

The spread spectrum clock generation (SSCG) feature allows to reduce electromagnetic interferences(see *Table 49: EMI characteristics for WLCSP49*). It is available only on the main PLL.

Table 43. SSCG parameters constraint

Symbol	Parameter	Min	Typ	Max(1)	Unit
f_{Mod}	Modulation frequency	-	-	10	KHz
md	Peak modulation depth	0.25	-	2	%
MODEPER * INCSTEP		-	-	2^{15}-1	-

1. Guaranteed by design, not tested in production.

Equation 1

The frequency modulation period (MODEPER) is given by the equation below:

$$MODEPER = round[f_{PLL_IN}/(4 \times f_{Mod})]$$

f_{PLL_IN} and f_{Mod} must be expressed in Hz.

As an example:

If f_{PLL_IN} = 1 MHz, and f_{MOD} = 1 kHz, the modulation depth (MODEPER) is given by equation 1:

$$MODEPER = round[10^6/(4 \times 10^3)] = 250$$

Equation 2

Equation 2 allows to calculate the increment step (INCSTEP):

$$INCSTEP = round[((2^{15} - 1) \times md \times PLLN)/(100 \times 5 \times MODEPER)]$$

f_{VCO_OUT} must be expressed in MHz.

With a modulation depth (md) = ±2 % (4 % peak to peak), and PLLN = 240 (in MHz):

$$INCSTEP = round[((2^{15} - 1) \times 2 \times 240)/(100 \times 5 \times 250)] = 126md(quantitazed)\%$$

An amplitude quantization error may be generated because the linear modulation profile is obtained by taking the quantized values (rounded to the nearest integer) of MODPER and INCSTEP. As a result, the achieved modulation depth is quantized. The percentage quantized modulation depth is given by the following formula:

$$md_{quantized}\% = (MODEPER \times INCSTEP \times 100 \times 5)/((2^{15} - 1) \times PLLN)$$

As a result:

$$md_{quantized}\% = (250 \times 126 \times 100 \times 5)/((2^{15} - 1) \times 240) = 2{,}002\%(peak)$$

Figure 28 and *Figure 29* show the main PLL output clock waveforms in center spread and down spread modes, where:

F0 is f_{PLL_OUT} nominal.

T_{mode} is the modulation period.

md is the modulation depth.

Figure 28. PLL output clock waveforms in center spread mode

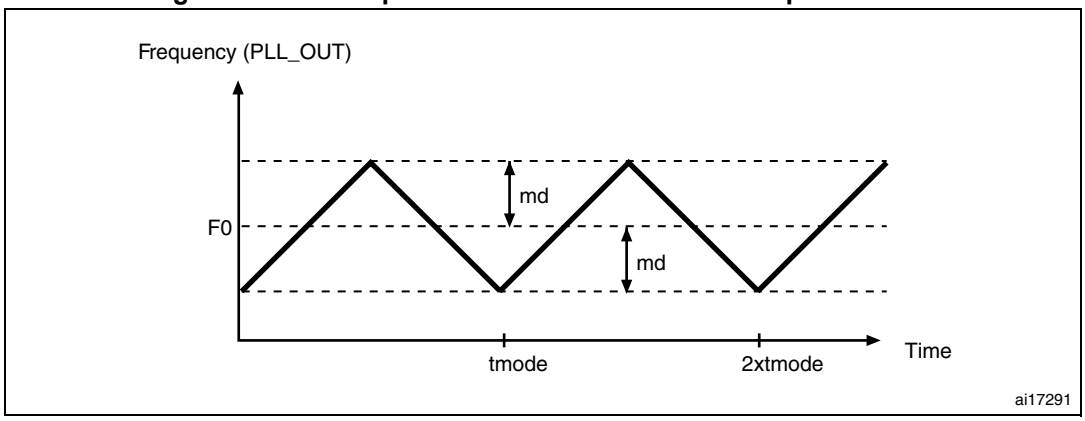

Figure 29. PLL output clock waveforms in down spread mode

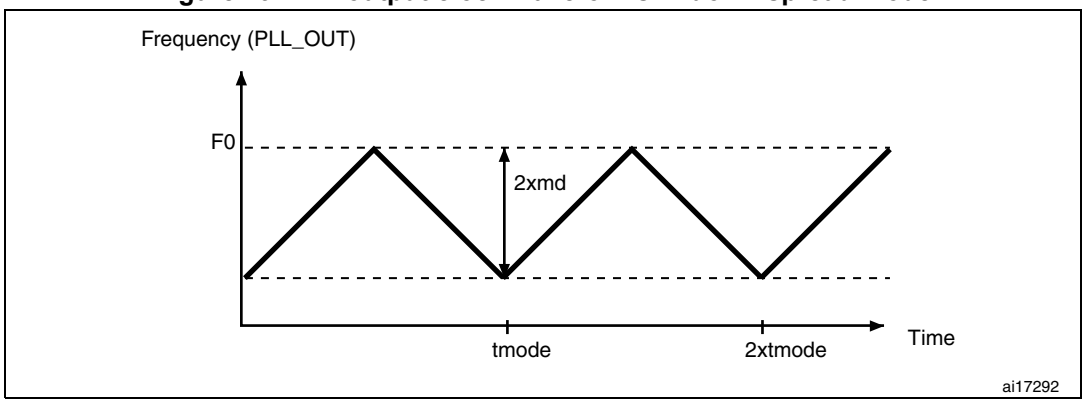

6.3.12 Memory characteristics

Flash memory

The characteristics are given at T_A = –40 to 105 °C unless otherwise specified.

The devices are shipped to customers with the Flash memory erased.

Table 44. Flash memory characteristics

Symbol	Parameter	Conditions	Min	Typ	Max	Unit
I_{DD}	Supply current	Write / Erase 8-bit mode, V_{DD} = 1.7 V	-	5	-	mA
		Write / Erase 16-bit mode, V_{DD} = 2.1 V	-	8	-	
		Write / Erase 32-bit mode, V_{DD} = 3.3 V	-	12	-	

Table 45. Flash memory programming

Symbol	Parameter	Conditions	Min(1)	Typ	Max(1)	Unit
t_{prog}	Word programming time	Program/erase parallelism (PSIZE) = x 8/16/32	-	16	100(2)	µs
$t_{ERASE16KB}$	Sector (16 KB) erase time	Program/erase parallelism (PSIZE) = x 8	-	400	800	ms
		Program/erase parallelism (PSIZE) = x 16	-	300	600	
		Program/erase parallelism (PSIZE) = x 32	-	250	500	
$t_{ERASE64KB}$	Sector (64 KB) erase time	Program/erase parallelism (PSIZE) = x 8	-	1200	2400	ms
		Program/erase parallelism (PSIZE) = x 16	-	700	1400	
		Program/erase parallelism (PSIZE) = x 32	-	550	1100	
$t_{ERASE128KB}$	Sector (128 KB) erase time	Program/erase parallelism (PSIZE) = x 8	-	2	4	s
		Program/erase parallelism (PSIZE) = x 16	-	1.3	2.6	
		Program/erase parallelism (PSIZE) = x 32	-	1	2	
t_{ME}	Mass erase time	Program/erase parallelism (PSIZE) = x 8	-	8	16	s
		Program/erase parallelism (PSIZE) = x 16	-	5.5	11	
		Program/erase parallelism (PSIZE) = x 32	-	4	8	
V_{prog}	Programming voltage	32-bit program operation	2.7	-	3.6	V
		16-bit program operation	2.1	-	3.6	V
		8-bit program operation	1.7	-	3.6	V

1. Guaranteed by characterization, not tested in production.
2. The maximum programming time is measured after 100K erase operations.

Table 46. Flash memory programming with V_{PP} voltage

Symbol	Parameter	Conditions	Min(1)	Typ	Max(1)	Unit
t_{prog}	Double word programming	T_A = 0 to +40 °C V_{DD} = 3.3 V V_{PP} = 8.5 V	-	16	100(2)	µs
$t_{ERASE16KB}$	Sector (16 KB) erase time		-	230	-	ms
$t_{ERASE64KB}$	Sector (64 KB) erase time		-	490	-	
$t_{ERASE128KB}$	Sector (128 KB) erase time		-	875	-	
t_{ME}	Mass erase time		-	1.750	-	s

Table 46. Flash memory programming with V_{PP} voltage (continued)

Symbol	Parameter	Conditions	Min(1)	Typ	Max(1)	Unit
V_{prog}	Programming voltage		2.7	-	3.6	V
V_{PP}	V_{PP} voltage range		7	-	9	V
I_{PP}	Minimum current sunk on the V_{PP} pin		10	-	-	mA
t_{VPP}(3)	Cumulative time during which V_{PP} is applied		-	-	1	hour

1. Guaranteed by design, not tested in production.
2. The maximum programming time is measured after 100K erase operations.
3. V_{PP} should only be connected during programming/erasing.

Table 47. Flash memory endurance and data retention

Symbol	Parameter	Conditions	Value	Unit
			Min(1)	
N_{END}	Endurance	T_A = –40 to +85 °C (6 suffix versions) T_A = –40 to +105 °C (7 suffix versions)	10	kcycles
t_{RET}	Data retention	1 kcycle(2) at T_A = 85 °C	30	Years
		1 kcycle(2) at T_A = 105 °C	10	
		10 kcycles(2) at T_A = 55 °C	20	

1. Guaranteed by characterization, not tested in production.
2. Cycling performed over the whole temperature range.

6.3.13 EMC characteristics

Susceptibility tests are performed on a sample basis during device characterization.

Functional EMS (electromagnetic susceptibility)

While a simple application is executed on the device (toggling 2 LEDs through I/O ports). the device is stressed by two electromagnetic events until a failure occurs. The failure is indicated by the LEDs:

- **Electrostatic discharge (ESD)** (positive and negative) is applied to all device pins until a functional disturbance occurs. This test is compliant with the IEC 61000-4-2 standard.
- **FTB**: A burst of fast transient voltage (positive and negative) is applied to V_{DD} and V_{SS} through a 100 pF capacitor, until a functional disturbance occurs. This test is compliant with the IEC 61000-4-4 standard.

A device reset allows normal operations to be resumed.

The test results are given in *Table 48*. They are based on the EMS levels and classes defined in application note AN1709.

Table 48. EMS characteristics for LQFP100 package

Symbol	Parameter	Conditions	Level/ Class
V_{FESD}	Voltage limits to be applied on any I/O pin to induce a functional disturbance	V_{DD} = 3.3 V, LQFP100, WLCSP49, T_A = +25 °C, f_{HCLK} = 84 MHz, conforms to IEC 61000-4-2	2B
V_{EFTB}	Fast transient voltage burst limits to be applied through 100 pF on V_{DD} and V_{SS} pins to induce a functional disturbance	V_{DD} = 3.3 V, LQFP100, WLCSP49, T_A = +25 °C, f_{HCLK} = 84 MHz, conforms to IEC 61000-4-4	4A

When the application is exposed to a noisy environment, it is recommended to avoid pin exposition to disturbances. The pins showing a middle range robustness are: PA0, PA1, PA2, on LQFP100 packages and PDR_ON on WLCSP49.

As a consequence, it is recommended to add a serial resistor (1 kΩ maximum) located as close as possible to the MCU to the pins exposed to noise (connected to tracks longer than 50 mm on PCB).

Designing hardened software to avoid noise problems

EMC characterization and optimization are performed at component level with a typical application environment and simplified MCU software. It should be noted that good EMC performance is highly dependent on the user application and the software in particular.

Therefore it is recommended that the user applies EMC software optimization and prequalification tests in relation with the EMC level requested for his application.

Software recommendations

The software flowchart must include the management of runaway conditions such as:

- Corrupted program counter
- Unexpected reset
- Critical Data corruption (control registers...)

Prequalification trials

Most of the common failures (unexpected reset and program counter corruption) can be reproduced by manually forcing a low state on the NRST pin or the Oscillator pins for 1 second.

To complete these trials, ESD stress can be applied directly on the device, over the range of specification values. When unexpected behavior is detected, the software can be hardened to prevent unrecoverable errors occurring (see application note AN1015).

Electromagnetic Interference (EMI)

The electromagnetic field emitted by the device are monitored while a simple application, executing EEMBC code, is running. This emission test is compliant with SAE IEC61967-2 standard which specifies the test board and the pin loading.

Table 49. EMI characteristics for WLCSP49

Symbol	Parameter	Conditions	Monitored frequency band	Max vs. [f_{HSE}/f_{CPU}]	Unit
				8/84 MHz	
S_{EMI}	Peak level	V_{DD} = 3.6 V, T_A = 25 °C, conforming to IEC61967-2	0.1 to 30 MHz	-4	dBµV
			30 to 130 MHz	-4	
			130 MHz to 1 GHz	-2	
			SAE EMI Level	1.5	-

Table 50. EMI characteristics for LQFP100

Symbol	Parameter	Conditions	Monitored frequency band	Max vs. [f_{HSE}/f_{CPU}]	Unit
				8/84 MHz	
S_{EMI}	Peak level	V_{DD} = 3.6 V, T_A = 25 °C, conforming to IEC61967-2	0.1 to 30 MHz	19	dBµV
			30 to 130 MHz	19	
			130 MHz to 1 GHz	11	
			SAE EMI Level	3.5	-

6.3.14 Absolute maximum ratings (electrical sensitivity)

Based on three different tests (ESD, LU) using specific measurement methods, the device is stressed in order to determine its performance in terms of electrical sensitivity.

Electrostatic discharge (ESD)

Electrostatic discharges (a positive then a negative pulse separated by 1 second) are applied to the pins of each sample according to each pin combination. The sample size depends on the number of supply pins in the device (3 parts × (n+1) supply pins). This test conforms to the JESD22-A114/C101 standard.

Table 51. ESD absolute maximum ratings

Symbol	Ratings	Conditions	Class	Maximum value(1)	Unit
$V_{ESD(HBM)}$	Electrostatic discharge voltage (human body model)	T_A = +25 °C conforming to JESD22-A114	2	2000	V
$V_{ESD(CDM)}$	Electrostatic discharge voltage (charge device model)	T_A = +25 °C conforming to ANSI/ESD STM5.3.1	II	400	

1. Guaranteed by characterization, not tested in production.

Static latchup

Two complementary static tests are required on six parts to assess the latchup performance:

- A supply overvoltage is applied to each power supply pin
- A current injection is applied to each input, output and configurable I/O pin

These tests are compliant with EIA/JESD 78A IC latchup standard.

Table 52. Electrical sensitivities

Symbol	Parameter	Conditions	Class
LU	Static latch-up class	T_A = +105 °C conforming to JESD78A	II level A

6.3.15 I/O current injection characteristics

As a general rule, current injection to the I/O pins, due to external voltage below V_{SS} or above V_{DD} (for standard, 3 V-capable I/O pins) should be avoided during normal product operation. However, in order to give an indication of the robustness of the microcontroller in cases when abnormal injection accidentally happens, susceptibility tests are performed on a sample basis during device characterization.

Functional susceptibilty to I/O current injection

While a simple application is executed on the device, the device is stressed by injecting current into the I/O pins programmed in floating input mode. While current is injected into the I/O pin, one at a time, the device is checked for functional failures.

The failure is indicated by an out of range parameter: ADC error above a certain limit (>5 LSB TUE), out of conventional limits of induced leakage current on adjacent pins (out of –5 µA/+0 µA range), or other functional failure (for example reset, oscillator frequency deviation).

Negative induced leakage current is caused by negative injection and positive induced leakage current by positive injection.

The test results are given in *Table 53*.

Table 53. I/O current injection susceptibility(1)

Symbol	Description	Functional susceptibility		Unit
		Negative injection	Positive injection	
I_{INJ}	Injected current on BOOT0 pin	–0	NA	mA
	Injected current on NRST pin	–0	NA	
	Injected current on PB3, PB4, PB5, PB6, PB7, PB8, PB9, PC13, PC14, PC15, PH1, PDR_ON, PC0, PC1,PC2, PC3, PD1, PD5, PD6, PD7, PE0, PE2, PE3, PE4, PE5, PE6	–0	NA	
	Injected current on any other FT pin	–5	NA	
	Injected current on any other pins	–5	+5	

1. NA = not applicable.

Note: It is recommended to add a Schottky diode (pin to ground) to analog pins which may potentially inject negative currents.

6.3.16 I/O port characteristics

General input/output characteristics

Unless otherwise specified, the parameters given in *Table 54* are derived from tests performed under the conditions summarized in *Table 14*. All I/Os are CMOS and TTL compliant.

Table 54. I/O static characteristics

Symbol	Parameter	Conditions	Min	Typ	Max	Unit
V_{IL}	FT, and NRST I/O input low level voltage	1.7 V≤ V_{DD}≤ 3.6 V	-	-	$0.35V_{DD}$–0.04(1)	V
					$0.3V_{DD}$(2)	
	BOOT0 I/O input low level voltage	1.75 V≤ V_{DD} ≤ 3.6 V, -40 °C≤ T_A ≤ 105 °C	-	-	$0.1V_{DD}$+0.1	
		1.7 V≤ V_{DD} ≤ 3.6 V, 0 °C≤ T_A ≤ 105 °C	-	-		
V_{IH}	FT and NRST I/O input high level voltage(5)	1.7 V≤ V_{DD}≤ 3.6 V	$0.45V_{DD}$+0.3(1)	-	-	V
			$0.4V_{DD}$(2)			
	BOOT0 I/O input high level voltage	1.75 V≤ V_{DD} ≤ 3.6 V, -40 °C≤ T_A ≤ 105 °C	$0.17V_{DD}$+0.7(1)	-	-	
		1.7 V≤ V_{DD} ≤ 3.6 V, 0 °C≤ T_A ≤ 105 °C				

Table 54. I/O static characteristics (continued)

Symbol	Parameter		Conditions	Min	Typ	Max	Unit
V_{HYS}	FT and NRST I/O input hysteresis		1.7 V≤ V_{DD}≤ 3.6 V	-	10% V_{DD} (3)	-	V
	BOOT0 I/O input hysteresis		1.75 V≤ V_{DD} ≤ 3.6 V, -40 °C≤ T_A ≤ 105 °C	-	100	-	mV
			1.7 V≤ V_{DD} ≤ 3.6 V, 0 °C≤ T_A ≤ 105 °C				
I_{lkg}	I/O input leakage current (4)		V_{SS} ≤ V_{IN} ≤ V_{DD}	-	-	±1	µA
	I/O FT input leakage current (5)		V_{IN} = 5 V	-	-	3	
R_{PU}	Weak pull-up equivalent resistor(6)	All pins except for PA10 (OTG_FS_ID)	V_{IN} = V_{SS}	30	40	50	kΩ
		PA10 (OTG_FS_ID)		7	10	14	
R_{PD}	Weak pull-down equivalent resistor(7)	All pins except for PA10 (OTG_FS_ID)	V_{IN} = V_{DD}	30	40	50	
		PA10 (OTG_FS_ID)		7	10	14	
C_{IO}(8)	I/O pin capacitance		-	-	5	-	pF

1. Guaranteed by design, not tested in production.
2. Guaranteed by test in production.
3. With a minimum of 200 mV.
4. Leakage could be higher than the maximum value, if negative current is injected on adjacent pins, Refer to *Table 53: I/O current injection susceptibility*
5. To sustain a voltage higher than VDD +0.3 V, the internal pull-up/pull-down resistors must be disabled. Leakage could be higher than the maximum value, if negative current is injected on adjacent pins.Refer to *Table 53: I/O current injection susceptibility*
6. Pull-up resistors are designed with a true resistance in series with a switchable PMOS. This PMOS contribution to the series resistance is minimum (~10% order).
7. Pull-down resistors are designed with a true resistance in series with a switchable NMOS. This NMOS contribution to the series resistance is minimum (~10% order).
8. Hysteresis voltage between Schmitt trigger switching levels. Guaranteed by characterization, not tested in production.

All I/Os are CMOS and TTL compliant (no software configuration required). Their characteristics cover more than the strict CMOS-technology or TTL parameters. The coverage of these requirements for FT I/Os is shown in *Figure 30*.

Figure 30. FT I/O input characteristics

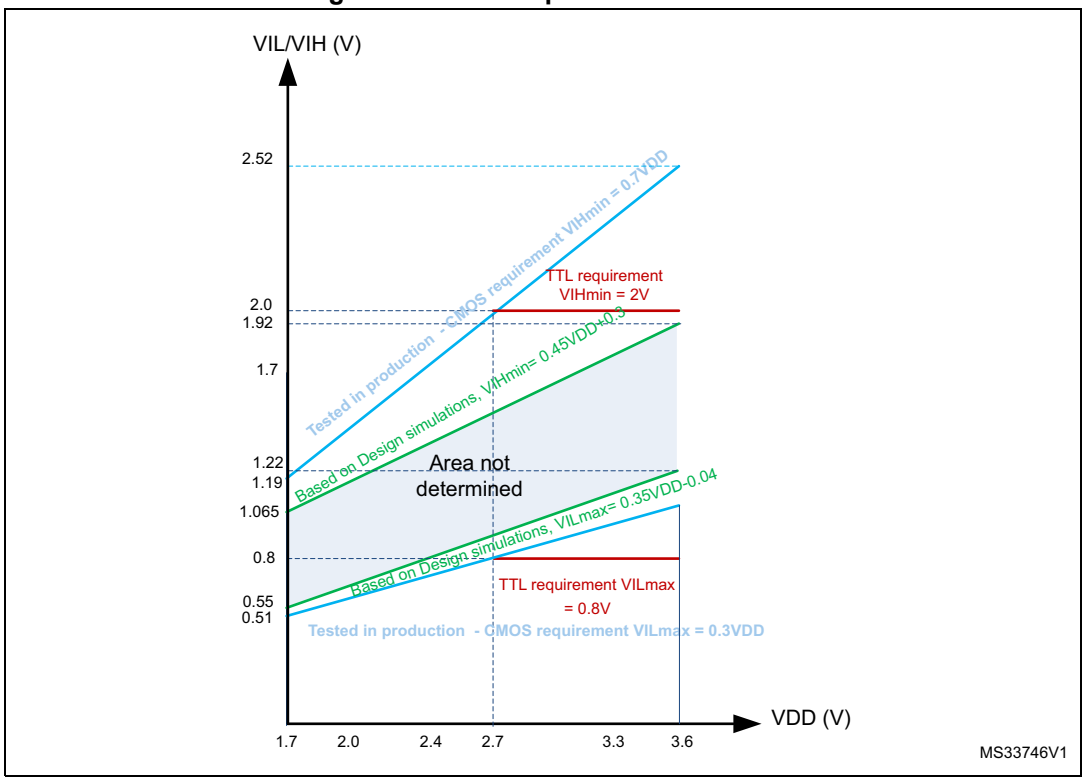

Output driving current

The GPIOs (general purpose input/outputs) can sink or source up to ±8 mA, and sink or source up to ±20 mA (with a relaxed V_{OL}/V_{OH}) except PC13, PC14 and PC15 which can sink or source up to ±3mA. When using the PC13 to PC15 GPIOs in output mode, the speed should not exceed 2 MHz with a maximum load of 30 pF.

In the user application, the number of I/O pins which can drive current must be limited to respect the absolute maximum rating specified in *Section 6.2*. In particular:

- The sum of the currents sourced by all the I/Os on $V_{DD,}$ plus the maximum Run consumption of the MCU sourced on $V_{DD,}$ cannot exceed the absolute maximum rating ΣI_{VDD} (see *Table 12*).
- The sum of the currents sunk by all the I/Os on V_{SS} plus the maximum Run consumption of the MCU sunk on V_{SS} cannot exceed the absolute maximum rating ΣI_{VSS} (see *Table 12*).

Output voltage levels

Unless otherwise specified, the parameters given in *Table 55* are derived from tests performed under ambient temperature and V_{DD} supply voltage conditions summarized in *Table 14*. All I/Os are CMOS and TTL compliant.

Table 55. Output voltage characteristics

Symbol	Parameter	Conditions	Min	Max	Unit
V_{OL}(1)	Output low level voltage for an I/O pin	CMOS port(2) I_{IO} = +8 mA 2.7 V ≤ V_{DD} ≤ 3.6 V	-	0.4	V
V_{OH}(3)	Output high level voltage for an I/O pin		V_{DD}–0.4	-	
V_{OL} (1)	Output low level voltage for an I/O pin	TTL port(2) I_{IO} =+8 mA 2.7 V ≤ V_{DD} ≤ 3.6 V	-	0.4	V
V_{OH} (3)	Output high level voltage for an I/O pin		2.4	-	
V_{OL}(1)	Output low level voltage for an I/O pin	I_{IO} = +20 mA 2.7 V ≤ V_{DD} ≤ 3.6 V	-	1.3(4)	V
V_{OH}(3)	Output high level voltage for an I/O pin		V_{DD}–1.3(4)	-	
V_{OL}(1)	Output low level voltage for an I/O pin	I_{IO} = +6 mA 1.8 V ≤ V_{DD} ≤ 3.6 V	-	0.4(4)	V
V_{OH}(3)	Output high level voltage for an I/O pin		V_{DD}–0.4(4)	-	
V_{OL}(1)	Output low level voltage for an I/O pin	I_{IO} = +4 mA 1.7 V ≤ V_{DD} ≤ 3.6 V	-	0.4(5)	V
V_{OH}(3)	Output high level voltage for an I/O pin		V_{DD}–0.4(5)	-	

1. The I_{IO} current sunk by the device must always respect the absolute maximum rating specified in *Table 12*. and the sum of I_{IO} (I/O ports and control pins) must not exceed I_{VSS}.
2. TTL and CMOS outputs are compatible with JEDEC standards JESD36 and JESD52.
3. The I_{IO} current sourced by the device must always respect the absolute maximum rating specified in *Table 12* and the sum of I_{IO} (I/O ports and control pins) must not exceed I_{VDD}.
4. Guaranteed by characterization results, not tested in production.
5. Guaranteed by design, not tested in production..

Input/output AC characteristics

The definition and values of input/output AC characteristics are given in *Figure 31* and , respectively.

Unless otherwise specified, the parameters given in *Table 56* are derived from tests performed under the ambient temperature and V_{DD} supply voltage conditions summarized in *Table 14*.

Table 56. I/O AC characteristics(1)(2)

OSPEEDRy [1:0] bit value(1)	Symbol	Parameter	Conditions	Min	Typ	Max	Unit
00	$f_{max(IO)out}$	Maximum frequency(3)	C_L = 50 pF, V_{DD} ≥ 2.70 V	-	-	4	MHz
			C_L = 50 pF, V_{DD}≥ 1.7 V	-	-	2	
			C_L = 10 pF, V_{DD} ≥ 2.70 V	-	-	8	
			C_L = 10 pF, V_{DD} ≥ 1.7 V	-	-	4	
	$t_{f(IO)out}$/ $t_{r(IO)out}$	Output high to low level fall time and output low to high level rise time	C_L = 50 pF, V_{DD} = 1.7 V to 3.6 V	-	-	100	ns

Table 56. I/O AC characteristics(1)(2) (continued)

OSPEEDRy [1:0] bit value(1)	Symbol	Parameter	Conditions	Min	Typ	Max	Unit
01	$f_{max(IO)out}$	Maximum frequency(3)	C_L = 50 pF, $V_{DD} \geq$ 2.70 V	-	-	25	MHz
			C_L = 50 pF, $V_{DD} \geq$ 1.7 V	-	-	12.5	
			C_L = 10 pF, $V_{DD} \geq$ 2.70 V	-	-	50	
			C_L = 10 pF, $V_{DD} \geq$ 1.7 V	-	-	20	
	$t_{f(IO)out}$/ $t_{r(IO)out}$	Output high to low level fall time and output low to high level rise time	C_L = 50 pF, $V_{DD} \geq$2.7 V	-	-	10	ns
			C_L = 50 pF, $V_{DD} \geq$ 1.7 V	-	-	20	
			C_L = 10 pF, $V_{DD} \geq$ 2.70 V	-	-	6	
			C_L = 10 pF, $V_{DD} \geq$ 1.7 V	-	-	10	
10	$f_{max(IO)out}$	Maximum frequency(3)	C_L = 40 pF, $V_{DD} \geq$ 2.70 V	-	-	50(4)	MHz
			C_L = 40 pF, $V_{DD} \geq$ 1.7 V	-	-	25	
			C_L = 10 pF, $V_{DD} \geq$ 2.70 V	-	-	100(4)	
			C_L = 10 pF, $V_{DD} \geq$ 1.7 V	-	-	50(4)	
	$t_{f(IO)out}$/ $t_{r(IO)out}$	Output high to low level fall time and output low to high level rise time	C_L = 40 pF, $V_{DD} \geq$ 2.70 V	-	-	6	ns
			C_L = 40 pF, $V_{DD} \geq$ 1.7 V	-	-	10	
			C_L = 10 pF, $V_{DD} \geq$ 2.70 V	-	-	4	
			C_L = 10 pF, $V_{DD} \geq$ 1.7 V	-	-	6	
11	$F_{max(IO)out}$	Maximum frequency(3)	C_L = 30 pF, $V_{DD} \geq$ 2.70 V	-	-	100(4)	MHz
			C_L = 30 pF, $V_{DD} \geq$ 1.7 V	-	-	50(4)	
			C_L = 10 pF, $V_{DD} \geq$ 2.70 V	-	-	180(4)	
			C_L = 10 pF, $V_{DD} \geq$ 1.7 V	-	-	100(4)	
	$t_{f(IO)out}$/ $t_{r(IO)out}$	Output high to low level fall time and output low to high level rise time	C_L = 30 pF, $V_{DD} \geq$ 2.70 V	-	-	4	ns
			C_L = 30 pF, $V_{DD} \geq$ 1.7 V	-	-	6	
			C_L = 10 pF, $V_{DD} \geq$ 2.70 V	-	-	2.5	
			C_L = 10 pF, $V_{DD} \geq$ 1.7 V	-	-	4	
-	t_{EXTIpw}	Pulse width of external signals detected by the EXTI controller		10	-	-	ns

1. Guaranteed by characterization, not tested in production.
2. The I/O speed is configured using the OSPEEDRy[1:0] bits. Refer to the STM32F4xx reference manual for a description of the GPIOx_SPEEDR GPIO port output speed register.
3. The maximum frequency is defined in *Figure 31*.
4. For maximum frequencies above 50 MHz and V_{DD} > 2.4 V, the compensation cell should be used.

Figure 31. I/O AC characteristics definition

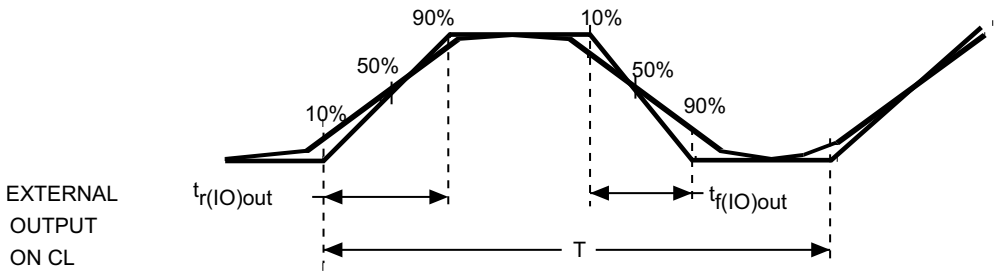

Maximum frequency is achieved if ($t_r + t_f$) ≤ (2/3)T and if the duty cycle is (45-55%) when loaded by CL specified in the table " *I/O AC characteristics*".

ai14131d

6.3.17 NRST pin characteristics

The NRST pin input driver uses CMOS technology. It is connected to a permanent pull-up resistor, R_{PU} (see *Table 54*).

Unless otherwise specified, the parameters given in *Table 57* are derived from tests performed under the ambient temperature and V_{DD} supply voltage conditions summarized in *Table 14*. Refer to *Table 54: I/O static characteristics* for the values of VIH and VIL for NRST pin.

Table 57. NRST pin characteristics

Symbol	Parameter	Conditions	Min	Typ	Max	Unit
R_{PU}	Weak pull-up equivalent resistor(1)	$V_{IN} = V_{SS}$	30	40	50	kΩ
$V_{F(NRST)}$(2)	NRST Input filtered pulse		-	-	100	ns
$V_{NF(NRST)}$(2)	NRST Input not filtered pulse	V_{DD} > 2.7 V	300	-	-	ns
T_{NRST_OUT}	Generated reset pulse duration	Internal Reset source	20	-	-	µs

1. The pull-up is designed with a true resistance in series with a switchable PMOS. This PMOS contribution to the series resistance must be minimum (~10% order).
2. Guaranteed by design, not tested in production.

Figure 32. Recommended NRST pin protection

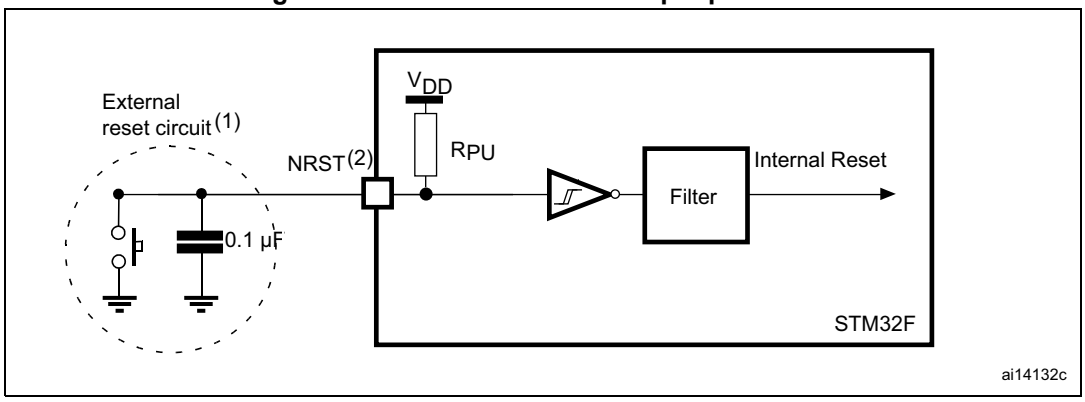

1. The reset network protects the device against parasitic resets.
2. The user must ensure that the level on the NRST pin can go below the $V_{IL(NRST)}$ max level specified in *Table 57*. Otherwise the reset is not taken into account by the device.

6.3.18 TIM timer characteristics

The parameters given in *Table 58* are guaranteed by design.

Refer to *Section 6.3.16: I/O port characteristics* for details on the input/output alternate function characteristics (output compare, input capture, external clock, PWM output).

Table 58. TIMx characteristics(1)(2)

Symbol	Parameter	Conditions(3)	Min	Max	Unit
$t_{res(TIM)}$	Timer resolution time	AHB/APBx prescaler=1 or 2 or 4, $f_{TIMxCLK}$ = 84 MHz	1	-	$t_{TIMxCLK}$
			11.9	-	ns
		AHB/APBx prescaler>4, $f_{TIMxCLK}$ = 84 MHz	1	-	$t_{TIMxCLK}$
			11.9	-	ns
f_{EXT}	Timer external clock frequency on CH1 to CH4	$f_{TIMxCLK}$ = 84 MHz	0	$f_{TIMxCLK}/2$	MHz
			0	42	MHz
Res_{TIM}	Timer resolution		-	16/32	bit
$t_{COUNTER}$	16-bit counter clock period when internal clock is selected	$f_{TIMxCLK}$ = 84 MHz	0.0119	780	µs
t_{MAX_COUNT}	Maximum possible count with 32-bit counter		-	65536 × 65536	$t_{TIMxCLK}$
		$f_{TIMxCLK}$ = 84 MHz	-	51.1	S

1. TIMx is used as a general term to refer to the TIM1 to TIM11 timers.
2. Guaranteed by design, not tested in production.
3. The maximum timer frequency on APB1 is 42 MHz and on APB2 is up to 84 MHz, by setting the TIMPRE bit in the RCC_DCKCFGR register, if APBx prescaler is 1 or 2 or 4, then TIMxCLK = HCKL, otherwise TIMxCLK >= 4x PCLKx.

6.3.19 Communications interfaces

I²C interface characteristics

The I2C interface meets the requirements of the standard I²C communication protocol with the following restrictions: the I/O pins SDA and SCL are mapped to are not “true” open-drain. When configured as open-drain, the PMOS connected between the I/O pin and VDD is disabled, but is still present.

The I²C characteristics are described in *Table59*. Refer also to *Section 6.3.16: I/O port characteristics* for more details on the input/output alternate function characteristics (SDA and SCL).

The I²C bus interface supports standard mode (up to 100 kHz) and fast mode (up to 400 kHz). The I2C bus frequency can be increased up to 1 MHz. For more details about the complete solution, please contact your local ST sales representative.

Table 59. I²C characteristics

Symbol	Parameter	Standard mode I²C(1)		Fast mode I²C(1)(2)		Unit
		Min	Max	Min	Max	
$t_{w(SCLL)}$	SCL clock low time	4.7	-	1.3	-	µs
$t_{w(SCLH)}$	SCL clock high time	4.0	-	0.6	-	
$t_{su(SDA)}$	SDA setup time	250	-	100	-	ns
$t_{h(SDA)}$	SDA data hold time	0	-	0	900(3)	
$t_{r(SDA)}$ $t_{r(SCL)}$	SDA and SCL rise time	-	1000		300	
$t_{f(SDA)}$ $t_{f(SCL)}$	SDA and SCL fall time	-	300	-	300	
$t_{h(STA)}$	Start condition hold time	4.0	-	0.6	-	µs
$t_{su(STA)}$	Repeated Start condition setup time	4.7	-	0.6	-	
$t_{su(STO)}$	Stop condition setup time	4.0	-	0.6	-	µs
$t_{w(STO:STA)}$	Stop to Start condition time (bus free)	4.7	-	1.3	-	µs
C_b	Capacitive load for each bus line	-	400	-	400	pF

1. Guaranteed by design, not tested in production.
2. f_{PCLK1} must be at least 2 MHz to achieve standard mode I²C frequencies. It must be at least 4 MHz to achieve fast mode I²C frequencies, and a multiple of 10 MHz to reach the 400 kHz maximum I²C fast mode clock.
3. The maximum data hold time has only to be met if the interface does not stretch the low period of SCL signal.

Figure 33. I²C bus AC waveforms and measurement circuit

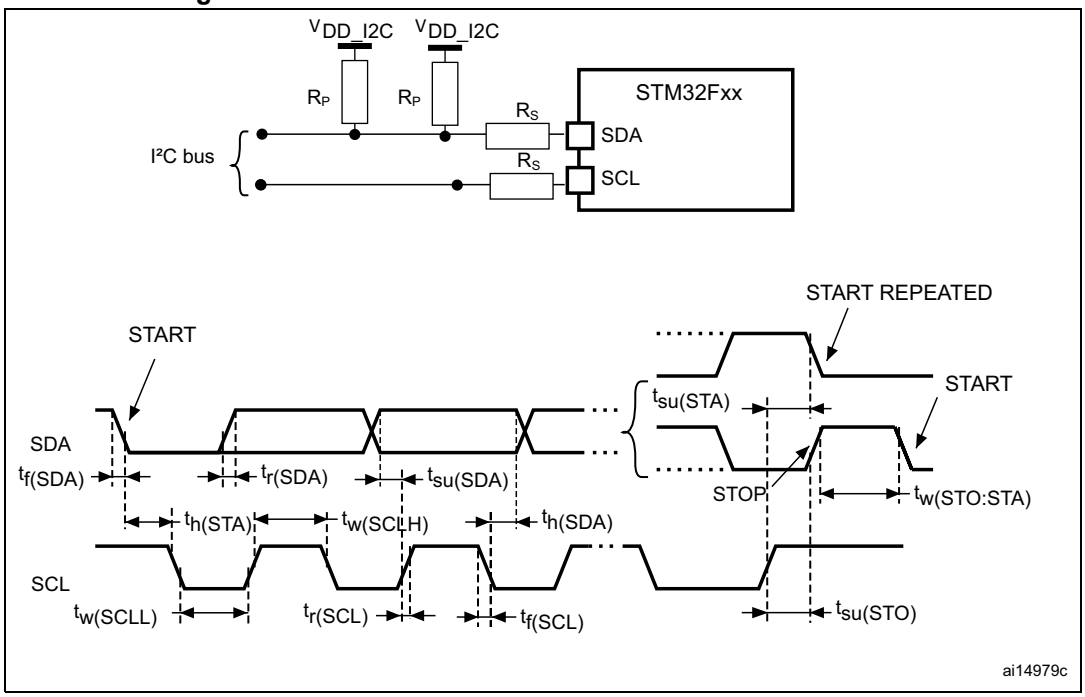

1. R_S = series protection resistor.
2. R_P = external pull-up resistor.
3. V_{DD_I2C} is the I2C bus power supply.

Table 60. SCL frequency (f_{PCLK1}= 42 MHz, V_{DD} = V_{DD_I2C} = 3.3 V)(1)(2)

f_{SCL} (kHz)	I2C_CCR value
	R_P = 4.7 kΩ
400	0x8019
300	0x8021
200	0x8032
100	0x0096
50	0x012C
20	0x02EE

1. R_P = External pull-up resistance, f_{SCL} = I²C speed
2. For speeds around 200 kHz, the tolerance on the achieved speed is of ±5%. For other speed ranges, the tolerance on the achieved speed is ±2%. These variations depend on the accuracy of the external components used to design the application.

SPI interface characteristics

Unless otherwise specified, the parameters given in *Table 61* for the SPI interface are derived from tests performed under the ambient temperature, f_{PCLKx} frequency and V_{DD} supply voltage conditions summarized in *Table 14*, with the following configuration:

- Output speed is set to OSPEEDRy[1:0] = 10
- Capacitive load C = 30 pF
- Measurement points are done at CMOS levels: $0.5V_{DD}$

Refer to *Section 6.3.16: I/O port characteristics* for more details on the input/output alternate function characteristics (NSS, SCK, MOSI, MISO for SPI).

Table 61. SPI dynamic characteristics(1)

Symbol	Parameter	Conditions	Min	Typ	Max	Unit
f_{SCK} $1/t_{c(SCK)}$	SPI clock frequency	Master mode, SPI1/4, 2.7 V < V_{DD} < 3.6 V	-	-	42	MHz
		Slave mode, SPI1/4, 2.7 V < V_{DD} < 3.6 V			42	
		Slave transmitter/full-duplex mode, SPI1/4, 2.7 V < V_{DD} < 3.6 V			38(2)	
		Master mode, SPI1/2/3/4, 1.7 V < V_{DD} < 3.6 V			21	
		Slave mode, SPI1/2/3/4, 1.7 V < V_{DD} < 3.6 V			21	
Duty(SCK)	Duty cycle of SPI clock frequency	Slave mode	30	50	70	%
$t_{w(SCKH)}$ $t_{w(SCKL)}$	SCK high and low time	Master mode, SPI presc = 2	T_{PCLK}–1.5	T_{PCLK}	T_{PCLK}+1.5	ns
$t_{su(NSS)}$	NSS setup time	Slave mode, SPI presc = 2	$4T_{PCLK}$	-	-	ns
$t_{h(NSS)}$	NSS hold time	Slave mode, SPI presc = 2	$2T_{PCLK}$	-	-	ns
$t_{su(MI)}$	Data input setup time	Master mode	0	-	-	ns
$t_{su(SI)}$		Slave mode	2.5	-	-	ns
$t_{h(MI)}$	Data input hold time	Master mode	6	-	-	ns
$t_{h(SI)}$		Slave mode	2.5	-	-	ns
$t_{a(SO)}$	Data output access time	Slave mode	9	-	20	ns
$t_{dis(SO)}$	Data output disable time	Slave mode	8	-	13	ns
$t_{v(SO)}$	Data output valid time	Slave mode (after enable edge), 2.7 V < V_{DD} < 3.6 V	-	9.5	13	ns
		Slave mode (after enable edge), 1.7 V < V_{DD} < 3.6 V	-	9.5	17	ns
$t_{h(SO)}$	Data output hold time	Slave mode (after enable edge), 2.7 V < V_{DD} < 3.6 V	5.5	-	-	ns
		Slave mode (after enable edge), 1.7 V < V_{DD} < 3.6 V	3.5	-	-	ns

Table 61. SPI dynamic characteristics(1) (continued)

Symbol	Parameter	Conditions	Min	Typ	Max	Unit
$t_{v(MO)}$	Data output valid time	Master mode (after enable edge)	-	3	5	ns
$t_{h(MO)}$	Data output hold time	Master mode (after enable edge)	2	-	-	ns

1. Guaranteed by characterization, not tested in production.
2. Maximum frequency in Slave transmitter mode is determined by the sum of $t_{v(SO)}$ and $t_{su(MI)}$ which has to fit into SCK low or high phase preceding the SCK sampling edge. This value can be achieved when the SPI communicates with a master having $t_{su(MI)}$ = 0 while Duty(SCK) = 50%

Figure 34. SPI timing diagram - slave mode and CPHA = 0

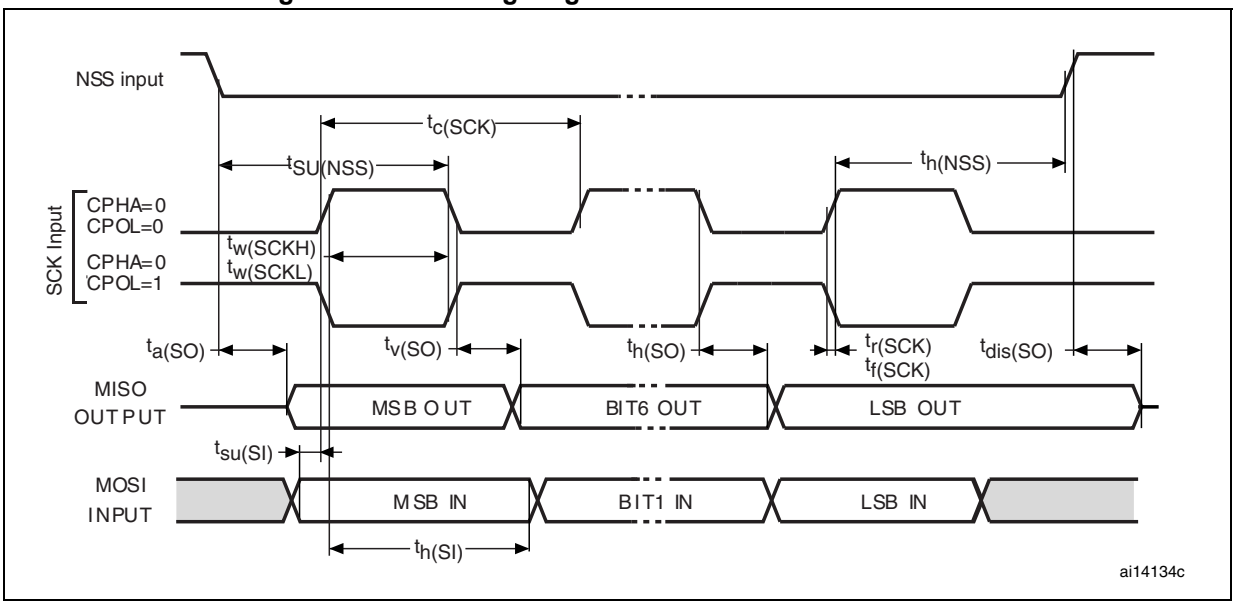

Figure 35. SPI timing diagram - slave mode and CPHA = 1(1)

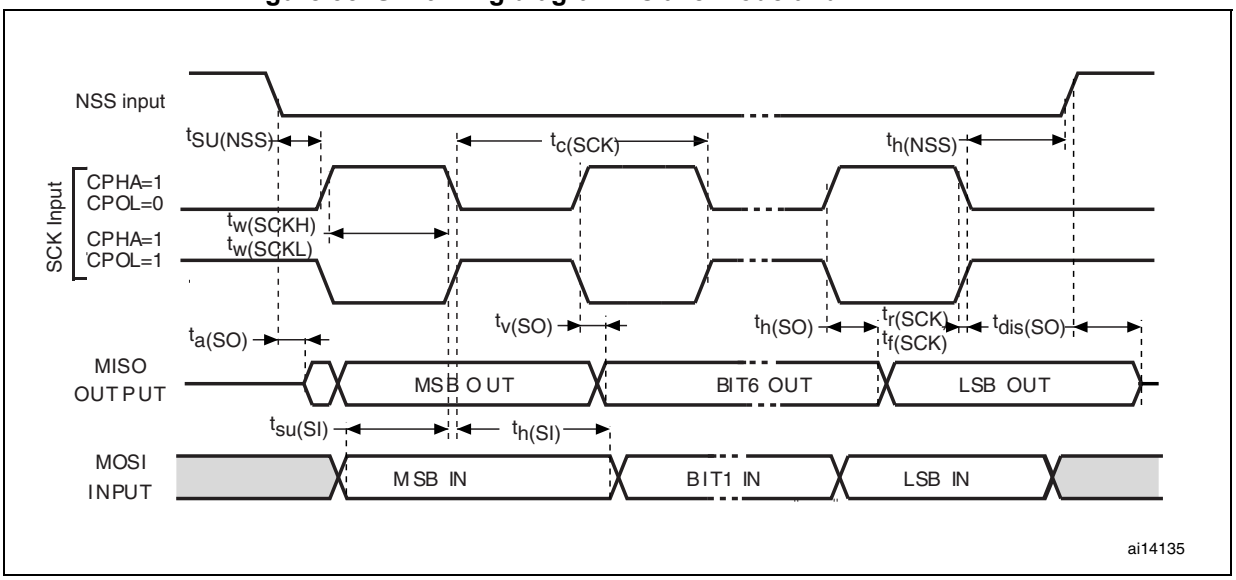

Figure 36. SPI timing diagram - master mode(1)

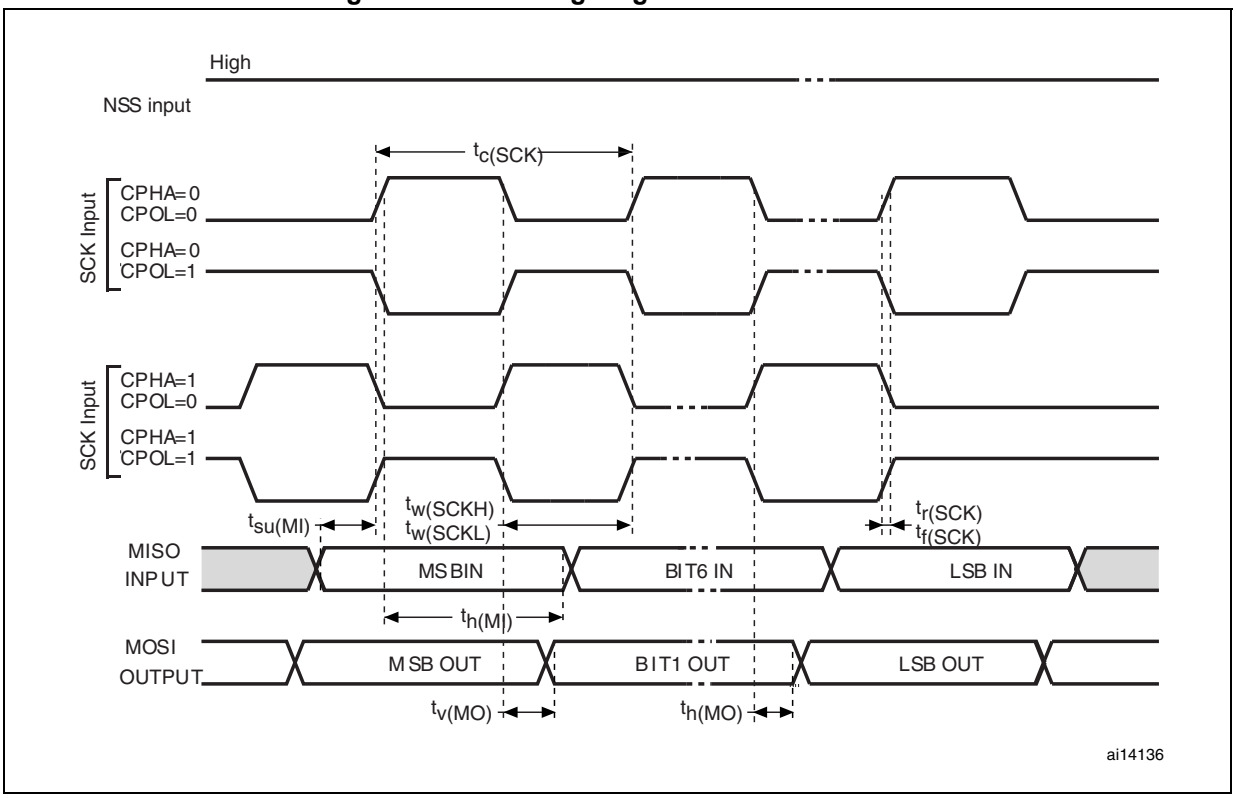

I^2S interface characteristics

Unless otherwise specified, the parameters given in *Table 62* for the I^2S interface are derived from tests performed under the ambient temperature, f_{PCLKx} frequency and V_{DD} supply voltage conditions summarized in *Table 14*, with the following configuration:

- Output speed is set to OSPEEDRy[1:0] = 10
- Capacitive load C = 30 pF
- Measurement points are done at CMOS levels: $0.5V_{DD}$

Refer to *Section 6.3.16: I/O port characteristics* for more details on the input/output alternate function characteristics (CK, SD, WS).

Table 62. I^2S dynamic characteristics(1)

Symbol	Parameter	Conditions	Min	Max	Unit
f_{MCK}	I2S Main clock output	-	256x8K	256xFs(2)	MHz
f_{CK}	I2S clock frequency	Master data: 32 bits	-	64xFs	MHz
		Slave data: 32 bits	-	64xFs	
D_{CK}	I2S clock frequency duty cycle	Slave receiver	30	70	%
$t_{v(WS)}$	WS valid time	Master mode	0	6	ns
$t_{h(WS)}$	WS hold time	Master mode	0	-	
$t_{su(WS)}$	WS setup time	Slave mode	1	-	
$t_{h(WS)}$	WS hold time	Slave mode	0	-	
$t_{su(SD_MR)}$	Data input setup time	Master receiver	7.5	-	
$t_{su(SD_SR)}$		Slave receiver	2	-	
$t_{h(SD_MR)}$	Data input hold time	Master receiver	0	-	
$t_{h(SD_SR)}$		Slave receiver	0	-	
$t_{v(SD_ST)}$ $t_{h(SD_ST)}$	Data output valid time	Slave transmitter (after enable edge)	-	27	
$t_{v(SD_MT)}$		Master transmitter (after enable edge)	-	20	
$t_{h(SD_MT)}$	Data output hold time	Master transmitter (after enable edge)	2.5	-	

1. Guaranteed by characterization, not tested in production.
2. The maximum value of 256xFs is 42 MHz (APB1 maximum frequency).

Note: Refer to the I2S section of the reference manual for more details on the sampling frequency (F_S).

*f_{MCK}, f_{CK}, and D_{CK} values reflect only the digital peripheral behavior. The values of these parameters might be slightly impacted by the source clock precision. D_{CK} depends mainly on the value of ODD bit. The digital contribution leads to a minimum value of (I2SDIV/(2*I2SDIV+ODD) and a maximum value of (I2SDIV+ODD)/(2*I2SDIV+ODD). F_S maximum value is supported for each mode/condition.*

Figure 37. I²S slave timing diagram (Philips protocol)(1)

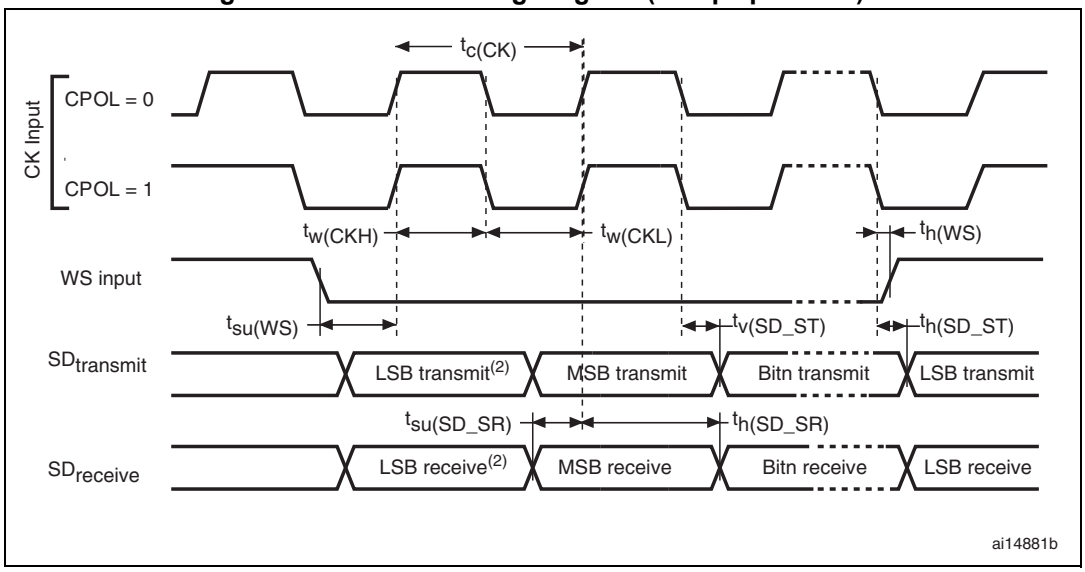

1. LSB transmit/receive of the previously transmitted byte. No LSB transmit/receive is sent before the first byte.

Figure 38. I²S master timing diagram (Philips protocol)(1)

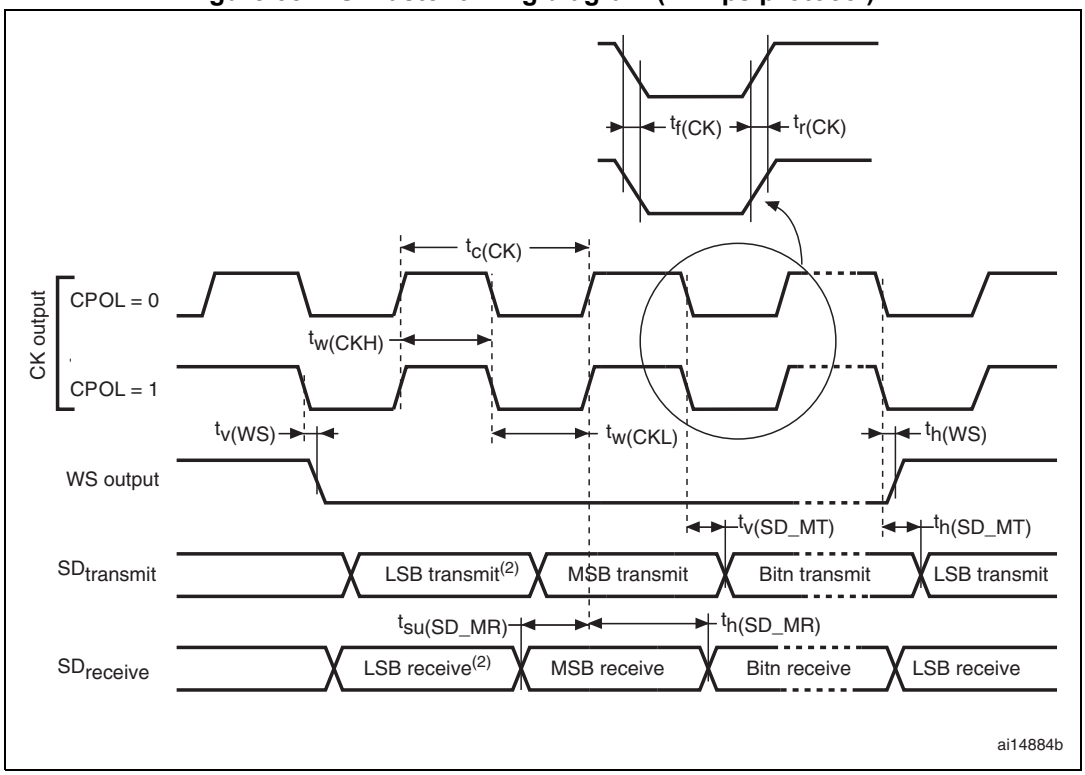

1. LSB transmit/receive of the previously transmitted byte. No LSB transmit/receive is sent before the first byte.

USB OTG full speed (FS) characteristics

This interface is present in USB OTG FS controller.

Table 63. USB OTG FS startup time

Symbol	Parameter	Max	Unit
$t_{STARTUP}$(1)	USB OTG FS transceiver startup time	1	µs

1. Guaranteed by design, not tested in production.

Table 64. USB OTG FS DC electrical characteristics

Symbol		Parameter	Conditions	Min.(1)	Typ.	Max.(1)	Unit
Input levels	V_{DD}	USB OTG FS operating voltage		3.0(2)	-	3.6	V
	V_{DI}(3)	Differential input sensitivity	I(USB_FS_DP/DM)	0.2	-	-	V
	V_{CM}(3)	Differential common mode range	Includes V_{DI} range	0.8	-	2.5	
	V_{SE}(3)	Single ended receiver threshold		1.3	-	2.0	
Output levels	V_{OL}	Static output level low	R_L of 1.5 kΩ to 3.6 V(4)	-	-	0.3	V
	V_{OH}	Static output level high	R_L of 15 kΩ to V_{SS}(4)	2.8	-	3.6	
R_{PD}		PA11, PA12 (USB_FS_DM/DP)	$V_{IN} = V_{DD}$	17	21	24	kΩ
		PA9 (OTG_FS_VBUS)		0.65	1.1	2.0	
R_{PU}		PA11, PA12 (USB_FS_DM/DP)	$V_{IN} = V_{SS}$	1.5	1.8	2.1	
		PA9 (OTG_FS_VBUS)	$V_{IN} = V_{SS}$	0.25	0.37	0.55	

1. All the voltages are measured from the local ground potential.
2. The USB OTG FS functionality is ensured down to 2.7 V but not the full USB full speed electrical characteristics which are degraded in the 2.7-to-3.0 V V_{DD} voltage range.
3. Guaranteed by design, not tested in production.
4. R_L is the load connected on the USB OTG FS drivers.

Note: When VBUS sensing feature is enabled, PA9 should be left at their default state (floating input), not as alternate function. A typical 200 µA current consumption of the embedded sensing block (current to voltage conversion to determine the different sessions) can be observed on PA9 when the feature is enabled.

Figure 39. USB OTG FS timings: definition of data signal rise and fall time

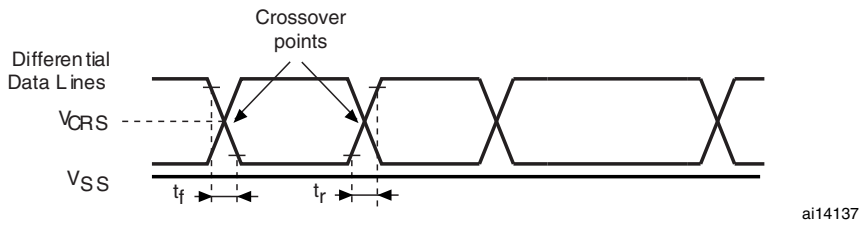

Table 65. USB OTG FS electrical characteristics(1)

Driver characteristics					
Symbol	**Parameter**	**Conditions**	**Min**	**Max**	**Unit**
t_r	Rise time(2)	C_L = 50 pF	4	20	ns
t_f	Fall time(2)	C_L = 50 pF	4	20	ns
t_{rfm}	Rise/ fall time matching	t_r/t_f	90	110	%
V_{CRS}	Output signal crossover voltage		1.3	2.0	V

1. Guaranteed by design, not tested in production.
2. Measured from 10% to 90% of the data signal. For more detailed informations, please refer to USB Specification - Chapter 7 (version 2.0).

6.3.20 12-bit ADC characteristics

Unless otherwise specified, the parameters given in *Table 66* are derived from tests performed under the ambient temperature, f_{PCLK2} frequency and V_{DDA} supply voltage conditions summarized in *Table 14*.

Table 66. ADC characteristics

Symbol	Parameter	Conditions	Min	Typ	Max	Unit
V_{DDA}	Power supply	$V_{DDA} - V_{REF+} < 1.2$ V	1.7(1)	-	3.6	V
V_{REF+}	Positive reference voltage		1.7(1)	-	V_{DDA}	V
f_{ADC}	ADC clock frequency	V_{DDA} = 1.7(1) to 2.4 V	0.6	15	18	MHz
		V_{DDA} = 2.4 to 3.6 V	0.6	30	36	MHz
f_{TRIG}(2)	External trigger frequency	f_{ADC} = 30 MHz, 12-bit resolution	-	-	1764	kHz
			-	-	17	$1/f_{ADC}$
V_{AIN}	Conversion voltage range(3)		0 (V_{SSA} or V_{REF-} tied to ground)	-	V_{REF+}	V
R_{AIN}(2)	External input impedance	See *Equation 1* for details	-	-	50	kΩ
R_{ADC}(2)(4)	Sampling switch resistance		-	-	6	kΩ
C_{ADC}(2)	Internal sample and hold capacitor		-	4	7	pF

Table 66. ADC characteristics (continued)

Symbol	Parameter	Conditions	Min	Typ	Max	Unit
t_{lat}(2)	Injection trigger conversion latency	f_{ADC} = 30 MHz	-	-	0.100	µs
			-	-	3(5)	$1/f_{ADC}$
t_{latr}(2)	Regular trigger conversion latency	f_{ADC} = 30 MHz	-	-	0.067	µs
			-	-	2(5)	$1/f_{ADC}$
t_S(2)	Sampling time	f_{ADC} = 30 MHz	0.100	-	16	µs
			3	-	480	$1/f_{ADC}$
t_{STAB}(2)	Power-up time		-	2	3	µs
t_{CONV}(2)	Total conversion time (including sampling time)	f_{ADC} = 30 MHz 12-bit resolution	0.50	-	16.40	µs
		f_{ADC} = 30 MHz 10-bit resolution	0.43	-	16.34	µs
		f_{ADC} = 30 MHz 8-bit resolution	0.37	-	16.27	µs
		f_{ADC} = 30 MHz 6-bit resolution	0.30	-	16.20	µs
		9 to 492 (t_S for sampling +n-bit resolution for successive approximation)				$1/f_{ADC}$
f_S(2)	Sampling rate (f_{ADC} = 30 MHz, and t_S = 3 ADC cycles)	12-bit resolution Single ADC	-	-	2	Msps
		12-bit resolution Interleave Dual ADC mode	-	-	3.75	Msps
		12-bit resolution Interleave Triple ADC mode	-	-	6	Msps
I_{VREF+}(2)	ADC V_{REF} DC current consumption in conversion mode		-	300	500	µA
I_{VDDA}(2)	ADC V_{DDA} DC current consumption in conversion mode		-	1.6	1.8	mA

1. V_{DDA} minimum value of 1.7 V is possible with the use of an external power supply supervisor (refer to *Section 3.14.2: Internal reset OFF*).
2. Guaranteed by characterization, not tested in production.
3. V_{REF+} is internally connected to V_{DDA} and V_{REF-} is internally connected to V_{SSA}.
4. R_{ADC} maximum value is given for V_{DD}=1.7 V, and minimum value for V_{DD}=3.3 V.
5. For external triggers, a delay of $1/f_{PCLK2}$ must be added to the latency specified in *Table 66*.

Equation 1: R_{AIN} max formula

$$R_{AIN} = \frac{(k - 0,5)}{f_{ADC} \times C_{ADC} \times \ln(2^{N+2})} - R_{ADC}$$

The formula above (*Equation 1*) is used to determine the maximum external impedance allowed for an error below 1/4 of LSB. N = 12 (from 12-bit resolution) and k is the number of sampling periods defined in the ADC_SMPR1 register.

Table 67. ADC accuracy at f_{ADC} = 18 MHz(1)

Symbol	Parameter	Test conditions	Typ	Max(2)	Unit
ET	Total unadjusted error	f_{ADC} =18 MHz V_{DDA} = 1.7 to 3.6 V V_{REF} = 1.7 to 3.6 V $V_{DDA} - V_{REF}$ < 1.2 V	±3	±4	LSB
EO	Offset error		±2	±3	
EG	Gain error		±1	±3	
ED	Differential linearity error		±1	±2	
EL	Integral linearity error		±2	±3	

1. Better performance could be achieved in restricted V_{DD}, frequency and temperature ranges.
2. Guaranteed by characterization, not tested in production.

Table 68. ADC accuracy at f_{ADC} = 30 MHz(1)

Symbol	Parameter	Test conditions	Typ	Max(2)	Unit
ET	Total unadjusted error	f_{ADC} = 30 MHz, R_{AIN} < 10 kΩ, V_{DDA} = 2.4 to 3.6 V, V_{REF} = 1.7 to 3.6 V, $V_{DDA} - V_{REF}$ < 1.2 V	±2	±5	LSB
EO	Offset error		±1.5	±2.5	
EG	Gain error		±1.5	±4	
ED	Differential linearity error		±1	±2	
EL	Integral linearity error		±1.5	±3	

1. Better performance could be achieved in restricted V_{DD}, frequency and temperature ranges.
2. Guaranteed by characterization, not tested in production.

Table 69. ADC accuracy at f_{ADC} = 36 MHz(1)

Symbol	Parameter	Test conditions	Typ	Max(2)	Unit
ET	Total unadjusted error	f_{ADC} =36 MHz, V_{DDA} = 2.4 to 3.6 V, V_{REF} = 1.7 to 3.6 V $V_{DDA} - V_{REF}$ < 1.2 V	±4	±7	LSB
EO	Offset error		±2	±3	
EG	Gain error		±3	±6	
ED	Differential linearity error		±2	±3	
EL	Integral linearity error		±3	±6	

1. Better performance could be achieved in restricted V_{DD}, frequency and temperature ranges.
2. Guaranteed by characterization, not tested in production.

Table 70. ADC dynamic accuracy at f_{ADC} = 18 MHz - limited test conditions(1)

Symbol	Parameter	Test conditions	Min	Typ	Max	Unit
ENOB	Effective number of bits	f_{ADC} =18 MHz V_{DDA} = V_{REF+}= 1.7 V Input Frequency = 20 KHz Temperature = 25 °C	10.3	10.4	-	bits
SINAD	Signal-to-noise and distortion ratio		64	64.2	-	dB
SNR	Signal-to-noise ratio		64	65	-	
THD	Total harmonic distortion		-67	-72	-	

1. Guaranteed by characterization, not tested in production.

Table 71. ADC dynamic accuracy at f_{ADC} = 36 MHz - limited test conditions(1)

Symbol	Parameter	Test conditions	Min	Typ	Max	Unit
ENOB	Effective number of bits	f_{ADC} = 36 MHz V_{DDA} = V_{REF+} = 3.3 V Input Frequency = 20 KHz Temperature = 25 °C	10.6	10.8	-	bits
SINAD	Signal-to noise and distortion ratio		66	67	-	dB
SNR	Signal-to noise ratio		64	68	-	
THD	Total harmonic distortion		-70	-72	-	

1. Guaranteed by characterization, not tested in production.

Note: ADC accuracy vs. negative injection current: injecting a negative current on any analog input pins should be avoided as this significantly reduces the accuracy of the conversion being performed on another analog input. It is recommended to add a Schottky diode (pin to ground) to analog pins which may potentially inject negative currents.

Any positive injection current within the limits specified for $I_{INJ(PIN)}$ and $\Sigma I_{INJ(PIN)}$ in *Section 6.3.16* does not affect the ADC accuracy.

Figure 40. ADC accuracy characteristics

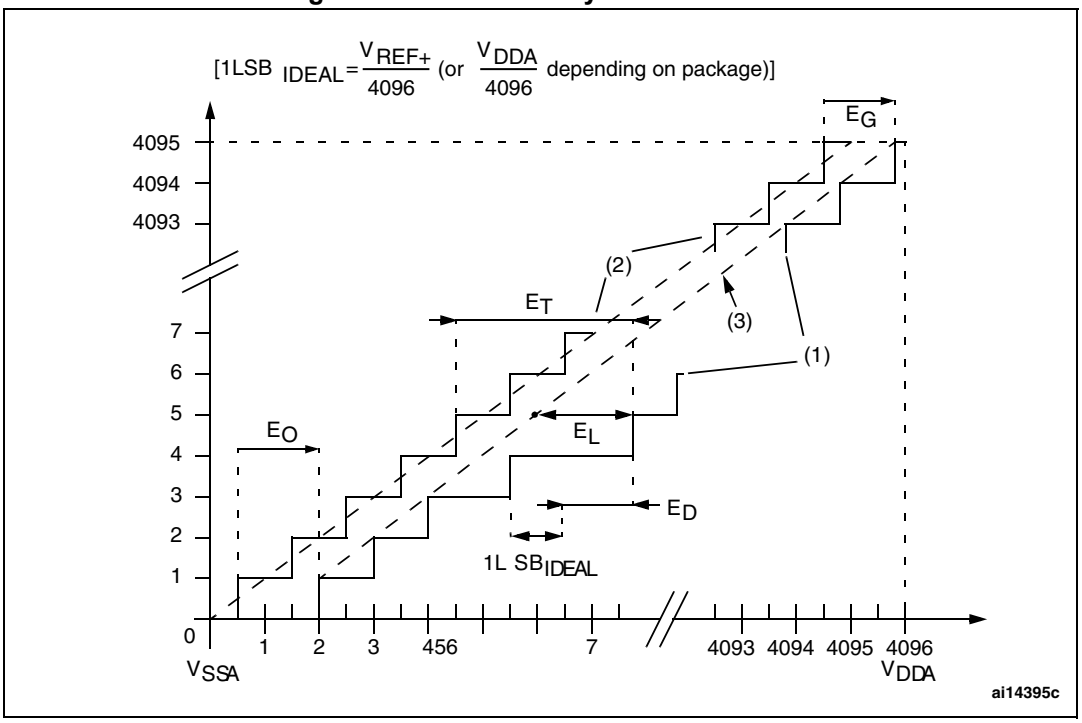

1. See also *Table 68*.
2. Example of an actual transfer curve.
3. Ideal transfer curve.
4. End point correlation line.
5. E_T = Total Unadjusted Error: maximum deviation between the actual and the ideal transfer curves.
   EO = Offset Error: deviation between the first actual transition and the first ideal one.
   EG = Gain Error: deviation between the last ideal transition and the last actual one.
   ED = Differential Linearity Error: maximum deviation between actual steps and the ideal one.
   EL = Integral Linearity Error: maximum deviation between any actual transition and the end point correlation line.

Figure 41. Typical connection diagram using the ADC

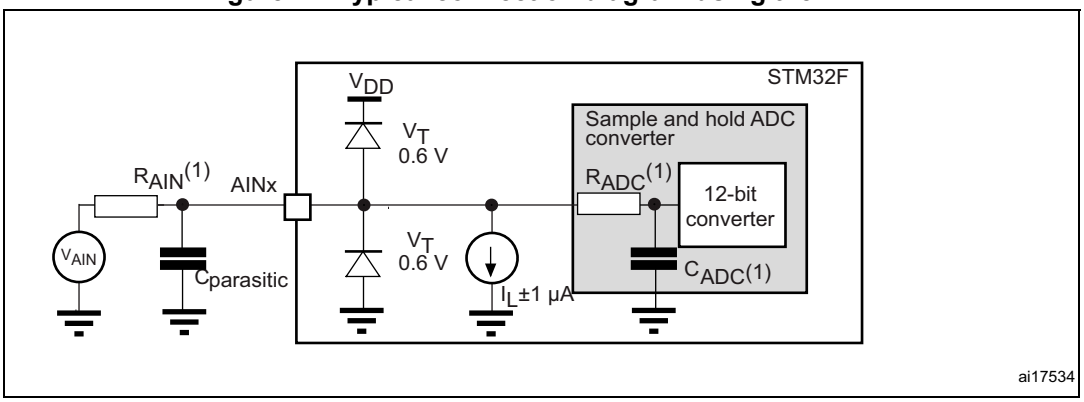

1. Refer to *Table 66* for the values of R_{AIN}, R_{ADC} and C_{ADC}.
2. $C_{parasitic}$ represents the capacitance of the PCB (dependent on soldering and PCB layout quality) plus the pad capacitance (roughly 5 pF). A high $C_{parasitic}$ value downgrades conversion accuracy. To remedy this, f_{ADC} should be reduced.

General PCB design guidelines

Power supply decoupling should be performed as shown in *Figure 42* or *Figure 43*, depending on whether V_{REF+} is connected to V_{DDA} or not. The 10 nF capacitors should be ceramic (good quality). They should be placed them as close as possible to the chip.

Figure 42. Power supply and reference decoupling (V_{REF+} not connected to V_{DDA})

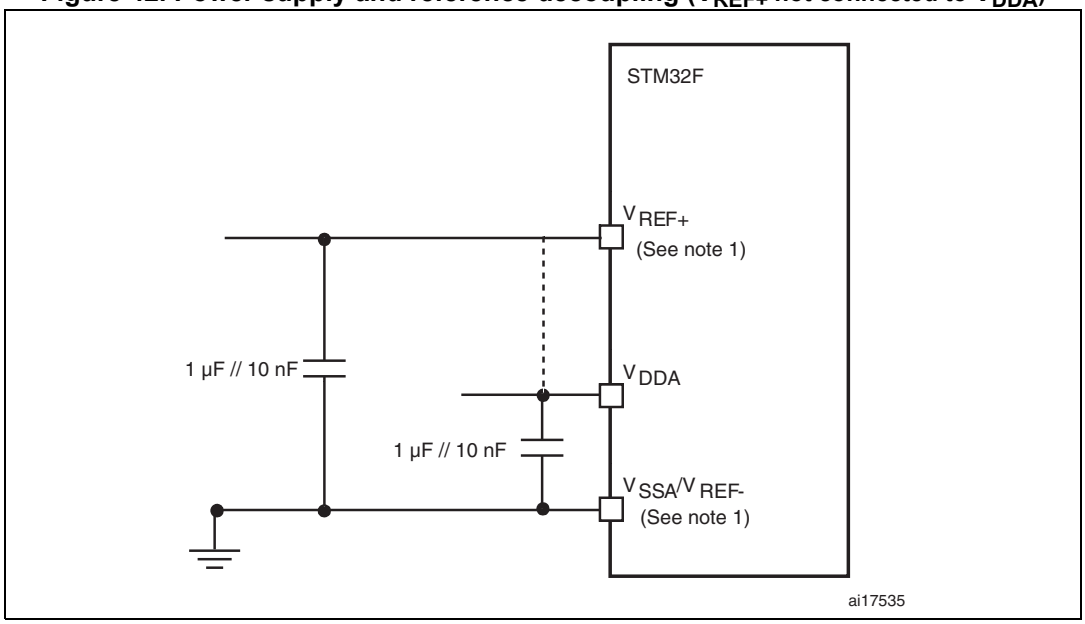

1. V_{REF+} and V_{REF-} inputs are both available on UFBGA100. V_{REF+} is also available on LQFP100. When V_{REF+} and V_{REF-} are not available, they are internally connected to V_{DDA} and V_{SSA}.

Figure 43. Power supply and reference decoupling (V_{REF+} connected to V_{DDA})

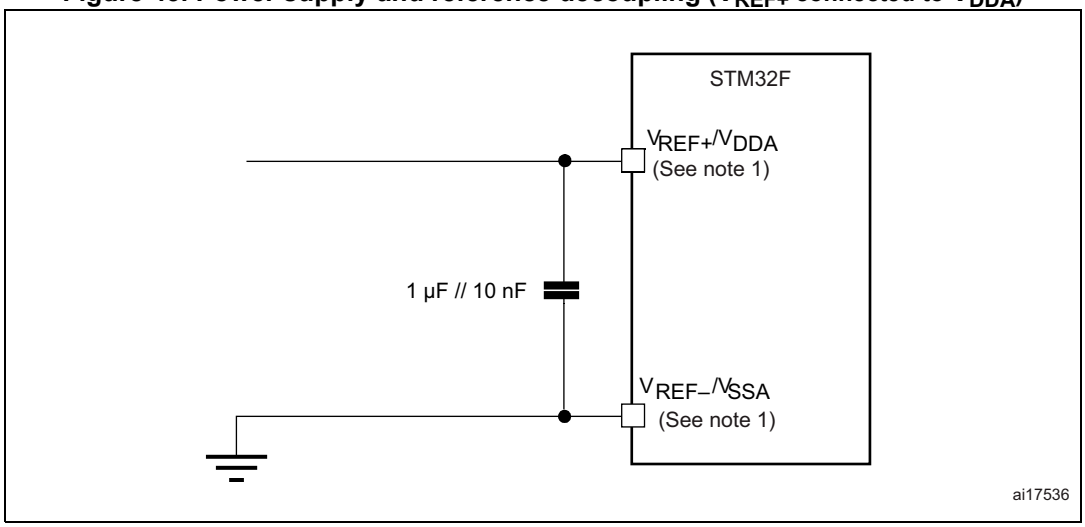

1. V_{REF+} and V_{REF-} inputs are both available on UFBGA100. V_{REF+} is also available on LQFP100. When V_{REF+} and V_{REF-} are not available, they are internally connected to V_{DDA} and V_{SSA}.

6.3.21 Temperature sensor characteristics

Table 72. Temperature sensor characteristics

Symbol	Parameter	Min	Typ	Max	Unit
T_L(1)	V_{SENSE} linearity with temperature	-	±1	±2	°C
Avg_Slope(1)	Average slope	-	2.5	-	mV/°C
V_{25}(1)	Voltage at 25 °C	-	0.76	-	V
t_{START}(2)	Startup time	-	6	10	µs
T_{S_temp}(2)	ADC sampling time when reading the temperature (1 °C accuracy)	10	-	-	µs

1. Guaranteed by characterization, not tested in production.
2. Guaranteed by design, not tested in production.

Table 73. Temperature sensor calibration values

Symbol	Parameter	Memory address
TS_CAL1	TS ADC raw data acquired at temperature of 30 °C, V_{DDA}= 3.3 V	0x1FFF 7A2C - 0x1FFF 7A2D
TS_CAL2	TS ADC raw data acquired at temperature of 110 °C, V_{DDA}= 3.3 V	0x1FFF 7A2E - 0x1FFF 7A2F

6.3.22 V_{BAT} monitoring characteristics

Table 74. V_{BAT} monitoring characteristics

Symbol	Parameter	Min	Typ	Max	Unit
R	Resistor bridge for V_{BAT}	-	50	-	KΩ
Q	Ratio on V_{BAT} measurement	-	4	-	
Er(1)	Error on Q	–1	-	+1	%
T_{S_vbat}(2)(2)	ADC sampling time when reading the V_{BAT} 1 mV accuracy	5	-	-	µs

1. Guaranteed by design, not tested in production.
2. Shortest sampling time can be determined in the application by multiple iterations.

6.3.23 Embedded reference voltage

The parameters given in *Table 75* are derived from tests performed under ambient temperature and V_{DD} supply voltage conditions summarized in *Table 14*.

Table 75. Embedded internal reference voltage

Symbol	Parameter	Conditions	Min	Typ	Max	Unit
V_{REFINT}	Internal reference voltage	–40 °C < T_A < +105 °C	1.18	1.21	1.24	V
$T_{S_vrefint}$(1)	ADC sampling time when reading the internal reference voltage	-	10	-	-	µs
V_{RERINT_s}(2)	Internal reference voltage spread over the temperature range	V_{DD} = 3V ± 10mV	-	3	5	mV

Table 75. Embedded internal reference voltage (continued)

Symbol	Parameter	Conditions	Min	Typ	Max	Unit
T_{Coeff}(2)	Temperature coefficient	-	-	30	50	ppm/°C
t_{START}(2)	Startup time	-	-	6	10	µs

1. Shortest sampling time can be determined in the application by multiple iterations.
2. Guaranteed by design, not tested in production

Table 76. Internal reference voltage calibration values

Symbol	Parameter	Memory address
V_{REFIN_CAL}	Raw data acquired at temperature of 30 °C V_{DDA} = 3.3 V	0x1FFF 7A2A - 0x1FFF 7A2B

6.3.24 SD/SDIO MMC card host interface (SDIO) characteristics

Unless otherwise specified, the parameters given in *Table 77* for the SDIO/MMC interface are derived from tests performed under the ambient temperature, f_{PCLK2} frequency and V_{DD} supply voltage conditions summarized in *Table 14*, with the following configuration:

- Output speed is set to OSPEEDRy[1:0] = 10
- Capacitive load C = 30 pF
- Measurement points are done at CMOS levels: $0.5V_{DD}$

Refer to *Section 6.3.16: I/O port characteristics* for more details on the input/output characteristics.

Figure 44. SDIO high-speed mode

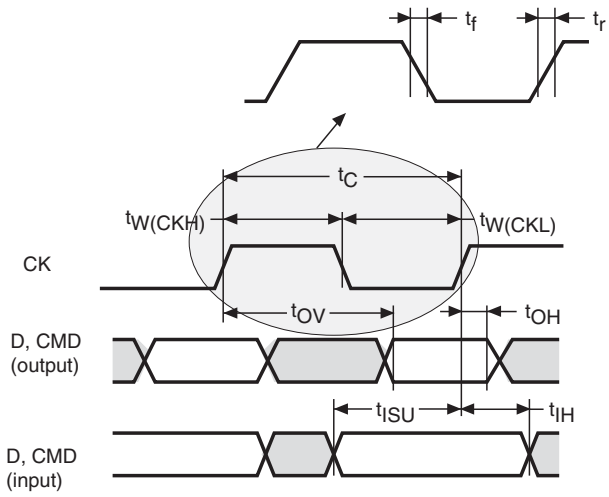

Figure 45. SD default mode

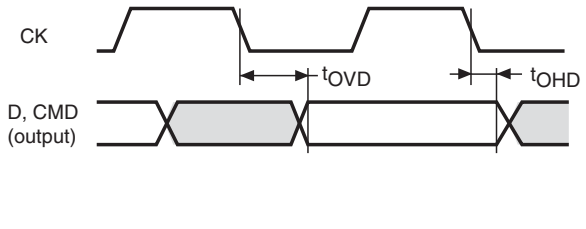

Table 77. Dynamic characteristics: SD / MMC characteristics(1)(2)

Symbol	Parameter	Conditions	Min	Typ	Max	Unit
f_{PP}	Clock frequency in data transfer mode		0	-	48	MHz
-	SDIO_CK/fPCLK2 frequency ratio		-	-	8/3	-
$t_{W(CKL)}$	Clock low time	fpp = 48MHz	8.5	9	-	ns
$t_{W(CKH)}$	Clock high time	fpp = 48MHz	8.3	10	-	
CMD, D inputs (referenced to CK) in MMC and SD HS mode						
t_{ISU}	Input setup time HS	fpp = 48MHz	3.5	-	-	ns
t_{IH}	Input hold time HS	fpp = 48MHz	0	-	-	
CMD, D outputs (referenced to CK) in MMC and SD HS mode						
t_{OV}	Output valid time HS	fpp = 48MHz	-	4.5	7	ns
t_{OH}	Output hold time HS	fpp = 48MHz	3	-	-	
CMD, D inputs (referenced to CK) in SD default mode						
t_{ISUD}	Input setup time SD	fpp = 24MHz	1.5	-	-	ns
t_{IHD}	Input hold time SD	fpp = 24MHz	0.5	-	-	
CMD, D outputs (referenced to CK) in SD default mode						
t_{OVD}	Output valid default time SD	fpp =24MHz	-	4.5	6.5	ns
t_{OHD}	Output hold default time SD	fpp =24MHz	3.5	-	-	

1. Data based on characterization results, not tested in production.
2. V_{DD} = 2.7 to 3.6 V.

6.3.25 RTC characteristics

Table 78. RTC characteristics

Symbol	Parameter	Conditions	Min	Max
-	f_{PCLK1}/RTCCLK frequency ratio	Any read/write operation from/to an RTC register	4	-

7 Package characteristics

7.1 Package mechanical data

In order to meet environmental requirements, ST offers these devices in different grades of ECOPACK® packages, depending on their level of environmental compliance. ECOPACK® specifications, grade definitions and product status are available at: *www.st.com*. ECOPACK® is an ST trademark.

7.1.1 WLCSP49, 3.06 x 3.06 mm, 0.4 mm pitch wafer level chip size package

Figure 46. WLCSP49 wafer level chip size package outline

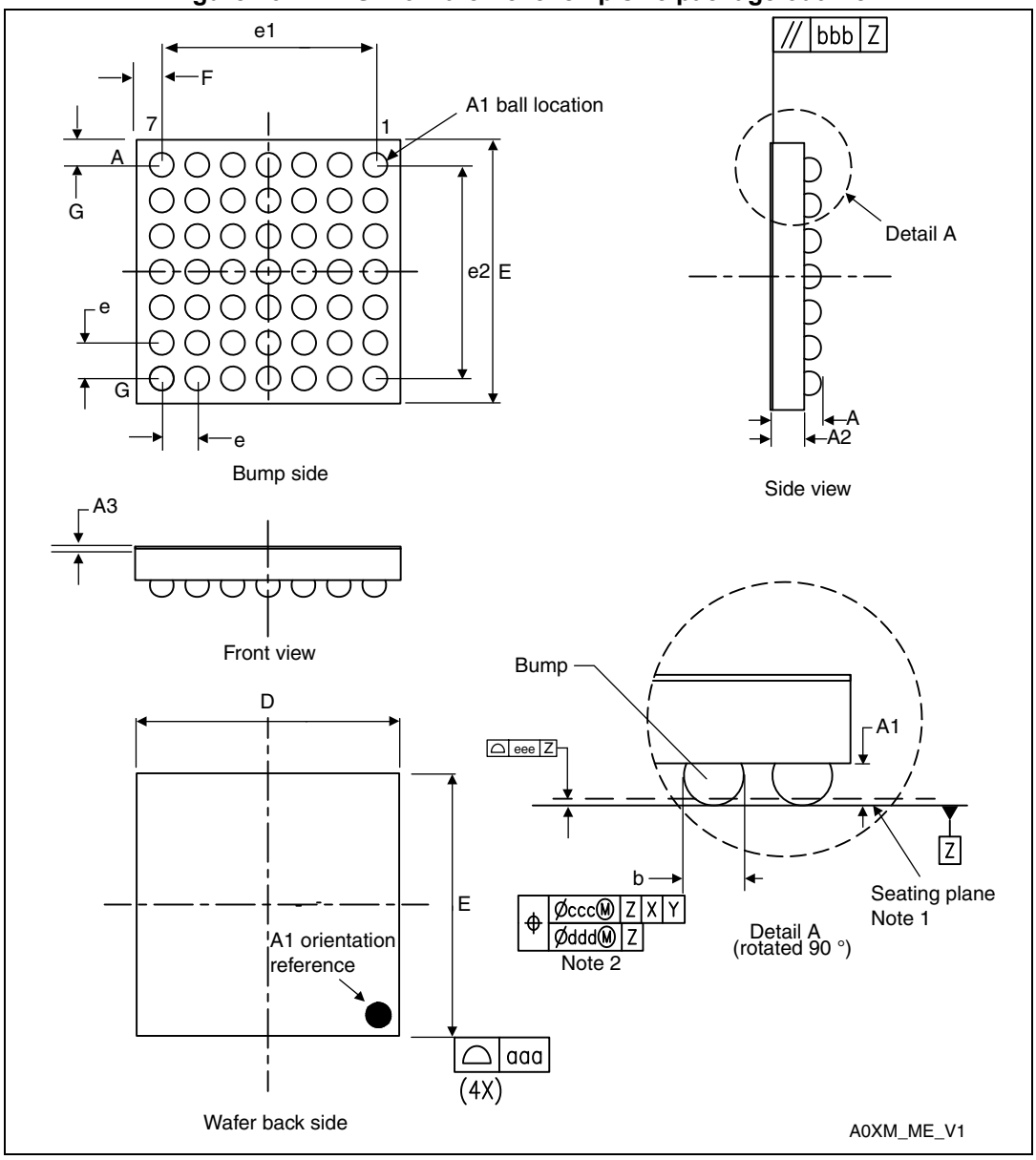

1. Drawing is not to scale.

Table 79. STM32F401xCE WLCSP49 wafer level chip size package mechanical data

Symbol	millimeters			inches(1)		
	Min	Typ	Max	Min	Typ	Max
A	0.525	0.555	0.585	0.0207	0.0219	0.0230
A1	-	0.175	-	-	0.0069	-

Table 79. STM32F401xCE WLCSP49 wafer level chip size package mechanical data

Symbol	millimeters			inches[1]		
	Min	Typ	Max	Min	Typ	Max
A2	-	0.380	-	-	0.0150	-
A3[2]	-	0.025	-	-	0.0010	-
b[3]	0.220	0.250	0.280	0.0087	0.0098	0.0110
D	2.994	3.029	3.064	0.1179	0.1193	0.1206
E	2.994	3.029	3.064	0.1179	0.1193	0.1206
e	-	0.400	-	-	0.0157	-
e1	-	2.400	-	-	0.0945	-
e2	-	2.400	-	-	0.0945	-
F	-	0.3145	-	-	0.0124	-
G	-	0.3145	-	-	0.0124	-
aaa	-	0.100	-	-	0.0039	-
bbb	-	0.100	-	-	0.0039	-
ccc	-	0.100	-	-	0.0039	-
ddd	-	0.050	-	-	0.0020	-
eee	-	0.050	-	-	0.0020	-

1. Values in inches are converted from mm and rounded to 4 decimal digits.
2. Back side coating
3. Dimension is measured at the maximum bump diameter parallel to primary datum Z.

Figure 47. WLCSP49 0.4 mm pitch wafer level chip size recommended footprint

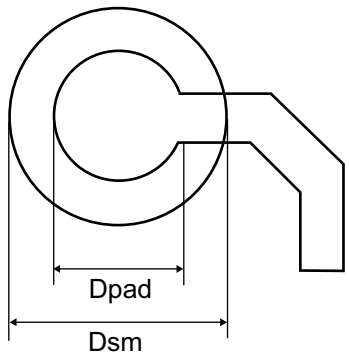

Table 80. WLCSP49 recommended PCB design rules (0.4 mm pitch)

Dimension	Recommended values
Pitch	0.4 mm
Dpad	260 µm max. (circular) 220 µm recommended
Dsm	300 µm min. (for 260 µm diameter pad)
PCB pad design	Non-solder mask defined via underbump allowed

Device marking

Figure 48. Example of WLCSP49 marking (top view)

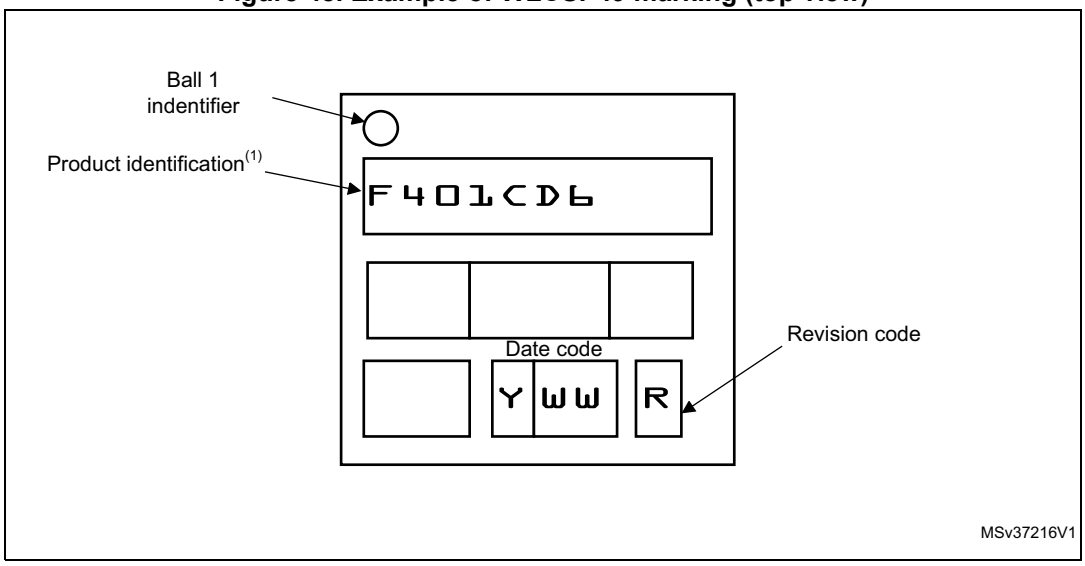

1. Parts marked as “ES”, “E” or accompanied by an Engineering Sample notification letter, are not yet qualified and therefore not yet ready to be used in production and any consequences deriving from such usage will not be at ST charge. In no event, ST will be liable for any customer usage of these engineering samples in production. ST Quality has to be contacted prior to any decision to use these Engineering samples to run qualification activity.

7.1.2 UFQFPN48, 7 x 7 mm, 0.5 mm pitch package

Figure 49. UFQFPN48, 7 x 7 mm, 0.5 mm pitch, package outline

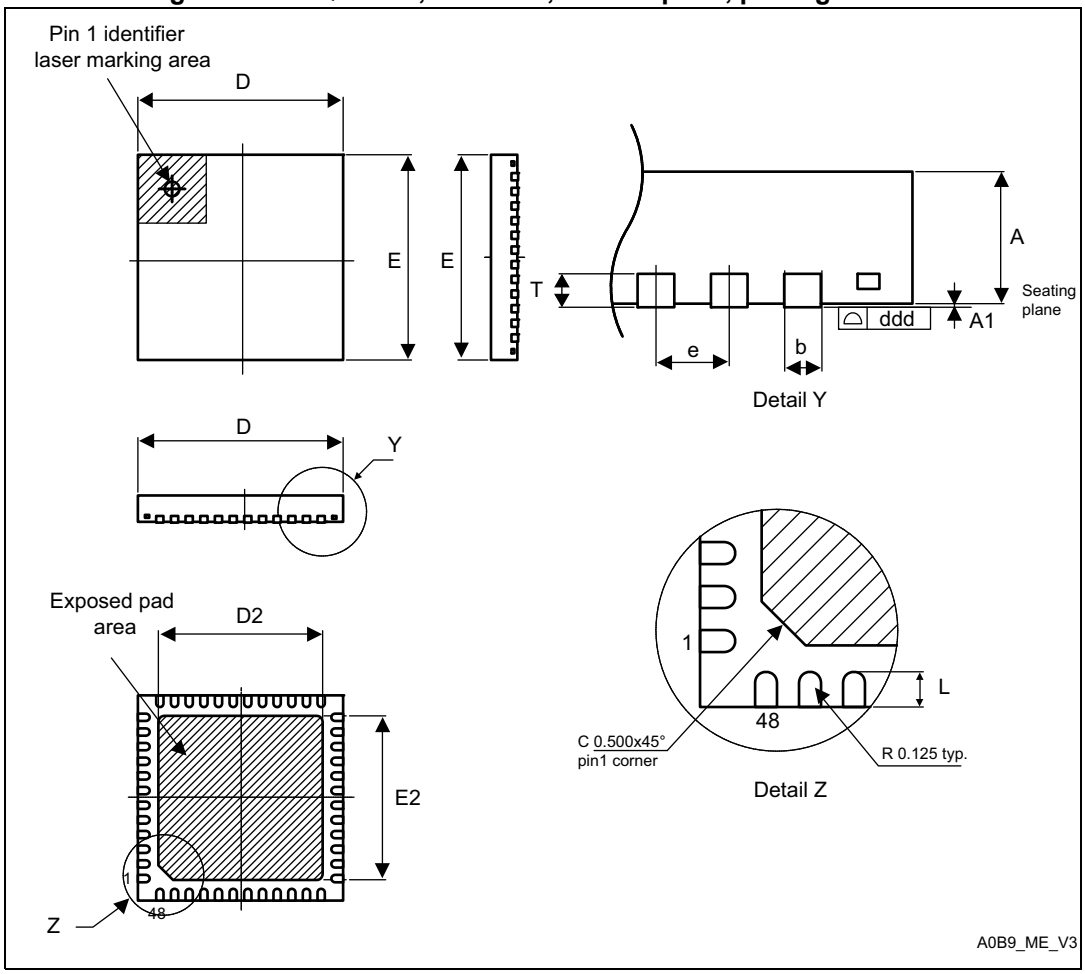

1. Drawing is not to scale.
2. All leads/pads should also be soldered to the PCB to improve the lead/pad solder joint life.
3. There is an exposed die pad on the underside of the UFQFPN package. It is recommended to connect and solder this back-side pad to PCB ground.

Table 81. UFQFPN48, 7 x 7 mm, 0.5 mm pitch, package mechanical data

Symbol	millimeters			inches(1)		
	Min.	Typ.	Max.	Min.	Typ.	Max.
A	0.500	0.550	0.600	0.0197	0.0217	0.0236
A1	0.000	0.020	0.050	0.0000	0.0008	0.0020
D	6.900	7.000	7.100	0.2717	0.2756	0.2795
E	6.900	7.000	7.100	0.2717	0.2756	0.2795
D2	5.500	5.600	5.700	0.2165	0.2205	0.2244
E2	5.500	5.600	5.700	0.2165	0.2205	0.2244
L	0.300	0.400	0.500	0.0118	0.0157	0.0197

Table 81. UFQFPN48, 7 x 7 mm, 0.5 mm pitch, package mechanical data (continued)

Symbol	millimeters			inches(1)		
	Min.	Typ.	Max.	Min.	Typ.	Max.
T	-	0.152	-	-	0.0060	-
b	0.200	0.250	0.300	0.0079	0.0098	0.0118
e	-	0.500	-	-	0.0197	-

1. Values in inches are converted from mm and rounded to 4 decimal digits.

Figure 50. UFQFPN48 recommended footprint

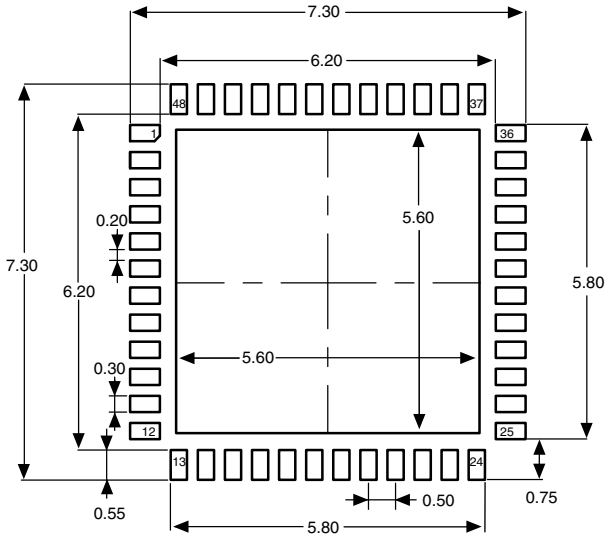

1. Dimensions are in millimeters.

Device marking

Figure 51. Example of UFQFPN48 marking (top view)

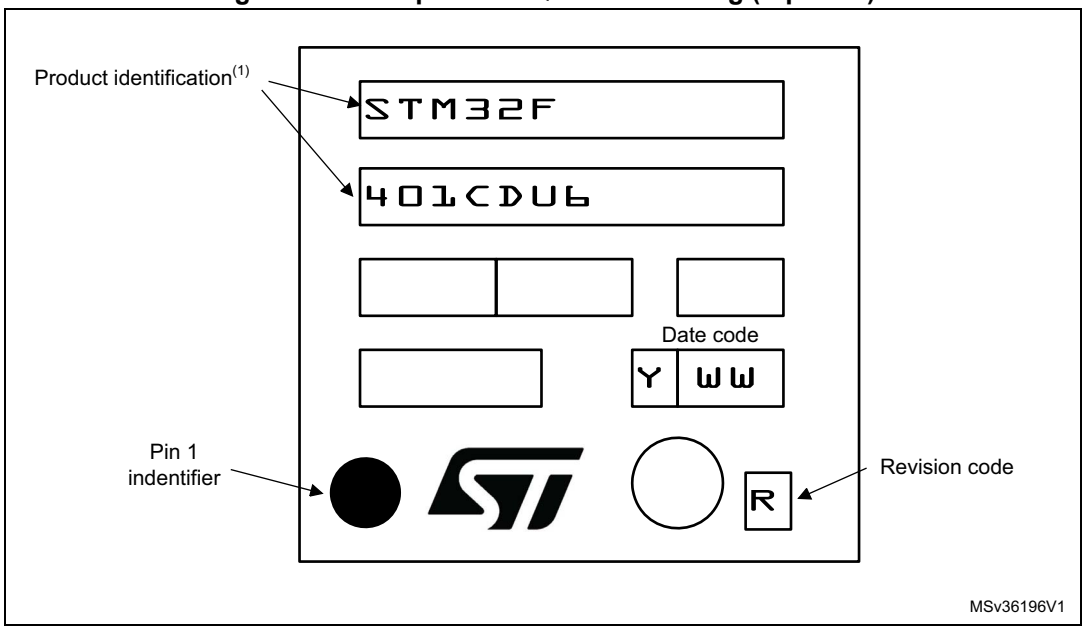

1. Parts marked as “ES”, “E” or accompanied by an Engineering Sample notification letter, are not yet qualified and therefore not yet ready to be used in production and any consequences deriving from such usage will not be at ST charge. In no event, ST will be liable for any customer usage of these engineering samples in production. ST Quality has to be contacted prior to any decision to use these Engineering samples to run qualification activity.

7.1.3 LQFP64, 10 x 10 mm, 64-pin low-profile quad flat package

Figure 52. LQFP64, 10 x 10 mm, 64-pin low-profile quad flat package outline

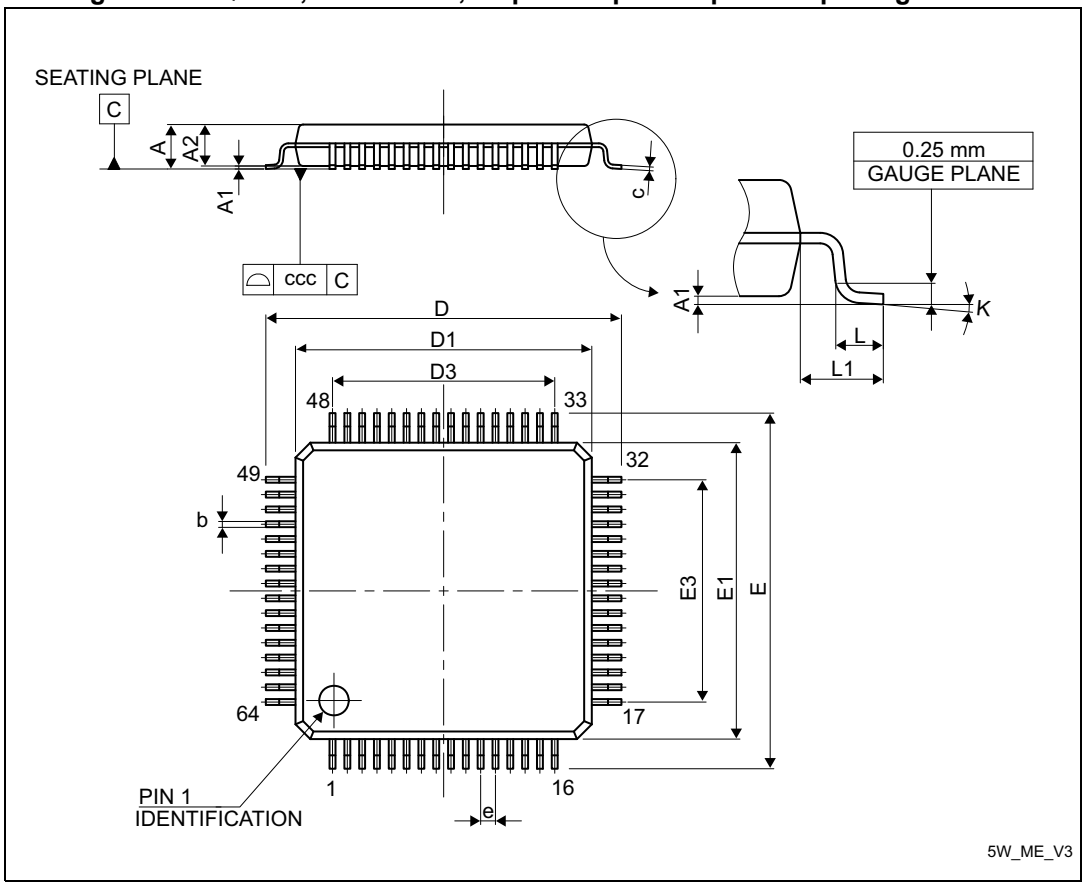

1. Drawing is not to scale.

Table 82. LQFP64, 10 x 10 mm, 64-pin low-profile quad flat package mechanical data

Symbol	millimeters			inches(1)		
	Min.	Typ.	Max.	Min.	Typ.	Max.
A	-	-	1.60	-	-	0.0630
A1	0.05	-	0.15	0.0020	-	0.0059
A2	1.35	1.40	1.45	0.0531	0.0551	0.0571
b	0.17	0.22	0.27	0.0067	0.0087	0.0106
c	0.09	-	0.20	0.0035	-	0.0079
D	-	12.00	-	-	0.4724	-
D1	-	10.00	-	-	0.3937	-
E	-	12.00	-	-	0.4724	-
E1	-	10.00	-	-	0.3937	-
e	-	0.50	-	-	0.0197	-
K	0°	3.5°	7°	0°	3.5°	7°
L	0.45	0.60	0.75	0.0177	0.0236	0.0295
L1	-	1.00	-	-	0.0394	-
N	Number of pins					
	64					

1. Values in inches are converted from mm and rounded to 4 decimal digits.

Figure 53. LQFP64 recommended footprint

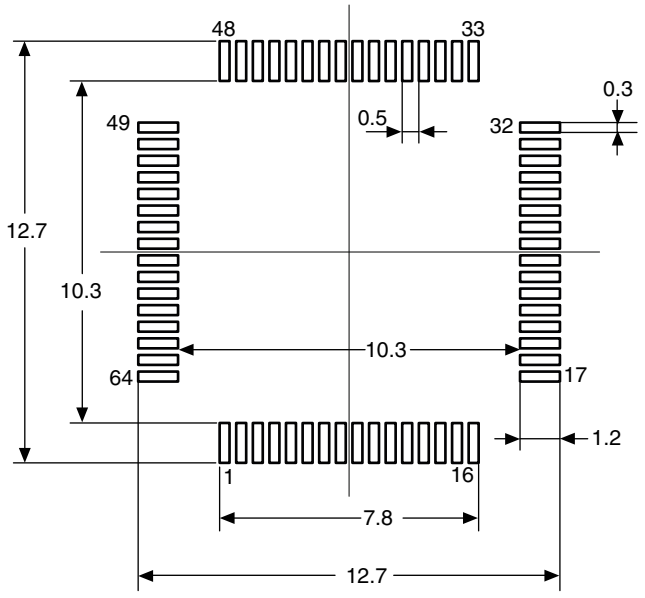

1. Dimensions are in millimeters.

Device marking

Figure 54. Example of LQFP64 marking (top view)

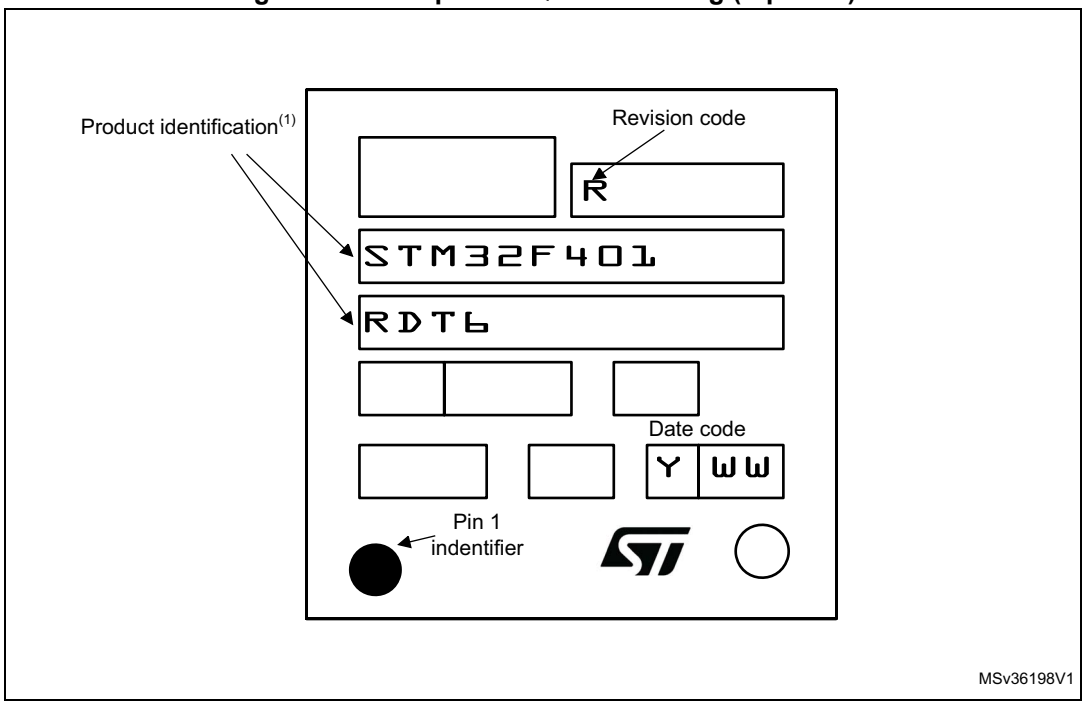

1. Parts marked as “ES”, “E” or accompanied by an Engineering Sample notification letter, are not yet qualified and therefore not yet ready to be used in production and any consequences deriving from such usage will not be at ST charge. In no event, ST will be liable for any customer usage of these engineering samples in production. ST Quality has to be contacted prior to any decision to use these Engineering samples to run qualification activity.

7.1.4 LQFP100, 14 x 14 mm, 100-pin low-profile quad flat package

Figure 55. LQFP100, 14 x 14 mm, 100-pin low-profile quad flat package outline

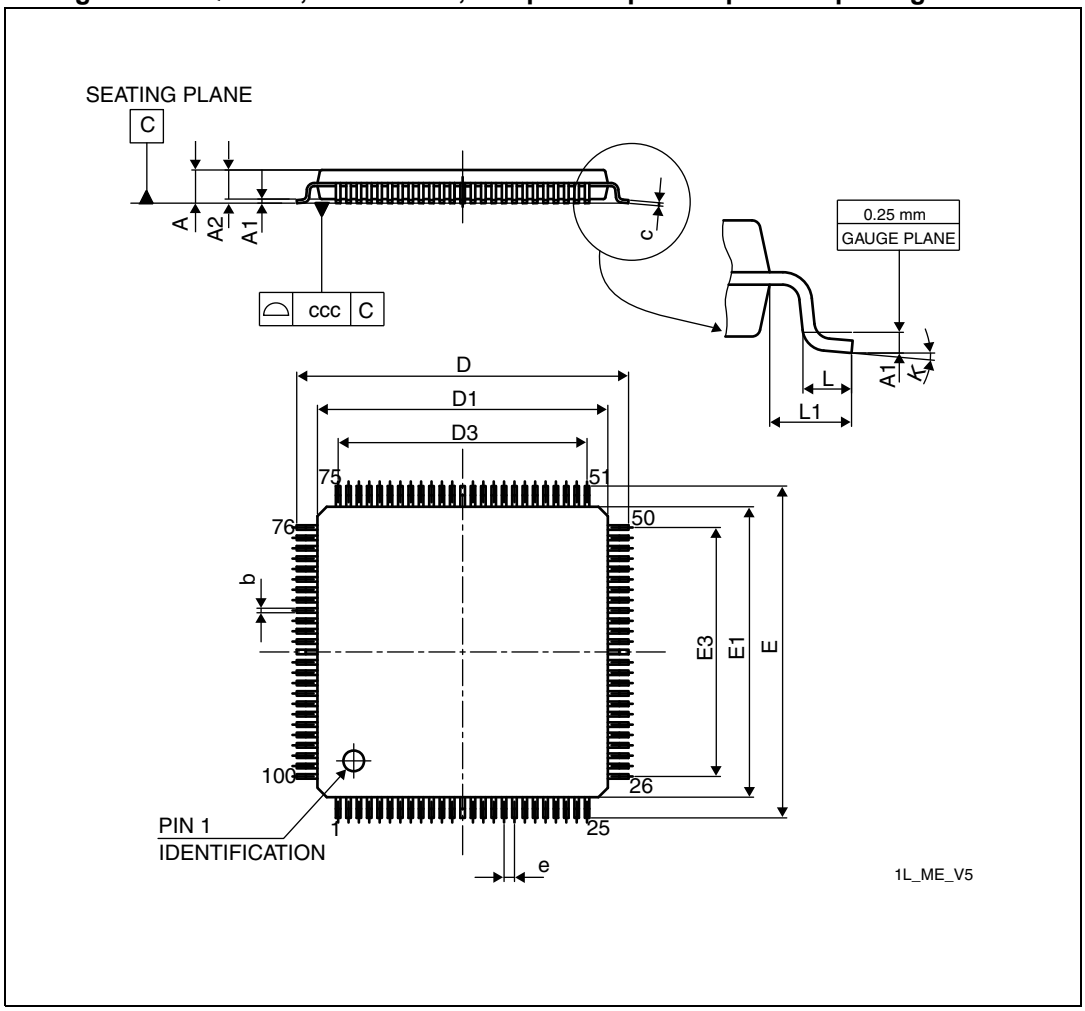

1. Drawing is not to scale.

Table 83. LQPF100, 14 x 14 mm, 100-pin low-profile quad flat package mechanical data

Symbol	millimeters			inches[1]		
	Min.	Typ.	Max.	Min.	Typ.	Max.
A	-	-	1.6	-	-	0.063
A1	0.05	-	0.15	0.002	-	0.0059
A2	1.35	1.4	1.45	0.0531	0.0551	0.0571
b	0.17	0.22	0.27	0.0067	0.0087	0.0106
c	0.09	-	0.2	0.0035	-	0.0079
D	15.8	16	16.2	0.622	0.6299	0.6378
D1	13.8	14	14.2	0.5433	0.5512	0.5591
D3	-	12	-	-	0.4724	-
E	15.8	16	16.2	0.622	0.6299	0.6378
E1	13.8	14	14.2	0.5433	0.5512	0.5591
E3	-	12	-	-	0.4724	-
e	-	0.5	-	-	0.0197	-
L	0.45	0.6	0.75	0.0177	0.0236	0.0295
L1	-	1	-	-	0.0394	-
K	0.0°	3.5°	7.0°	0.0°	3.5°	7.0°
ccc	0.08			0.0031		

1. Values in inches are converted from mm and rounded to 4 decimal digits.

Figure 56. LQFP100 recommended footprint

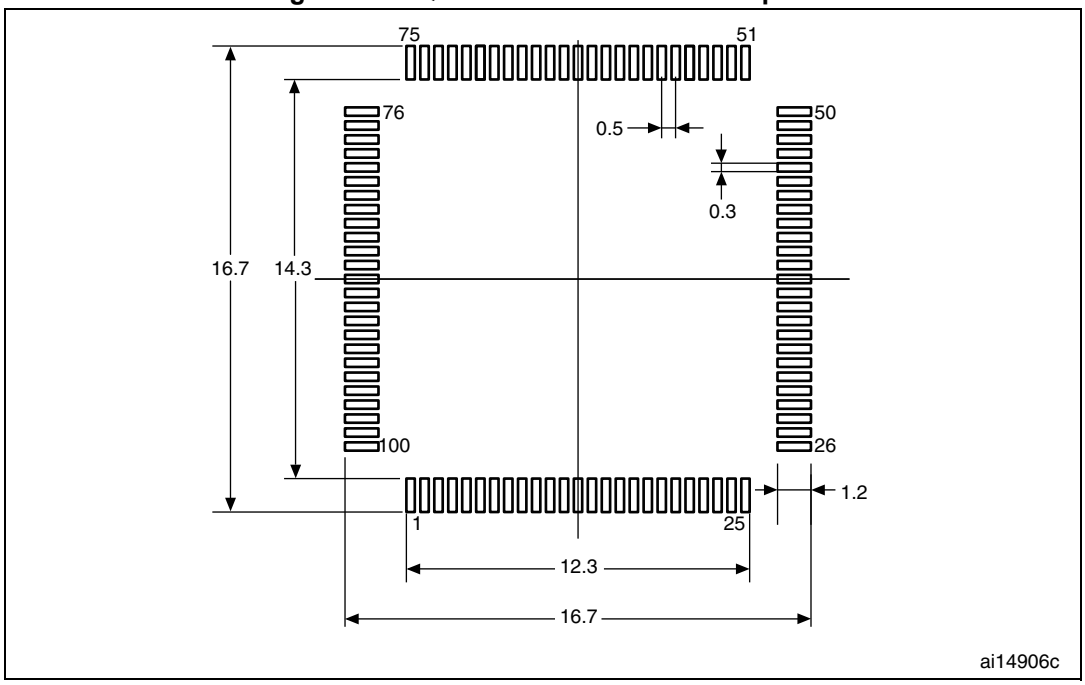

1. Dimensions are in millimeters.

Device marking

Figure 57. Example of LQPF100 marking (top view)

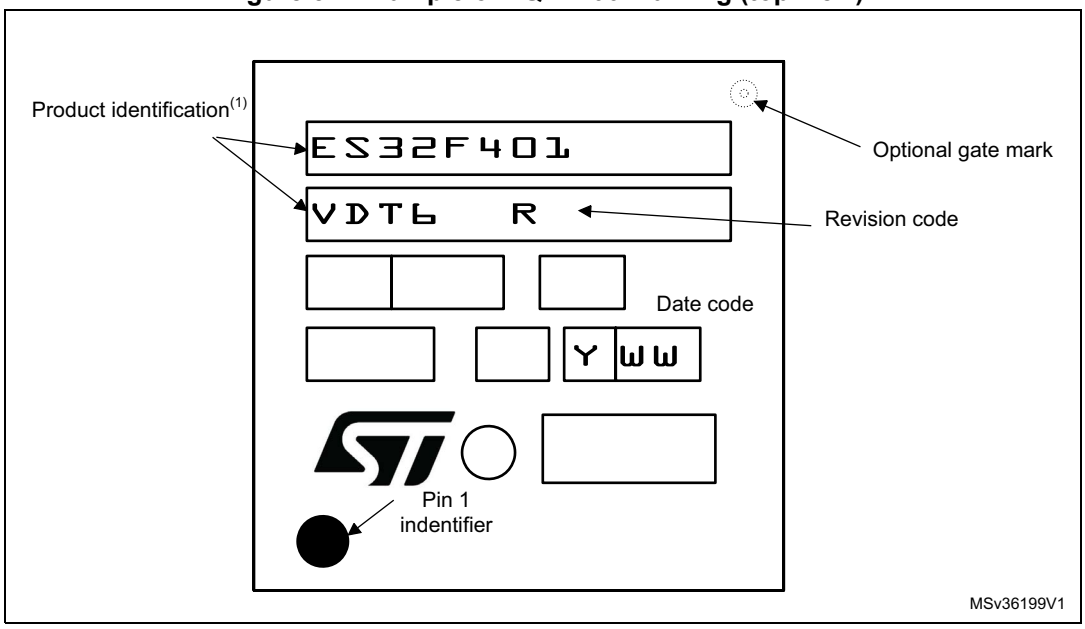

1. Parts marked as “ES”, “E” or accompanied by an Engineering Sample notification letter, are not yet qualified and therefore not yet ready to be used in production and any consequences deriving from such usage will not be at ST charge. In no event, ST will be liable for any customer usage of these engineering samples in production. ST Quality has to be contacted prior to any decision to use these Engineering samples to run qualification activity.

7.1.5 UFBGA100, 7 x 7 mm, 0.5 mm pitch package

Figure 58. UFBGA100, 7 x 7 mm, 0.50 mm pitch, ultra fine pitch ball grid array package outline

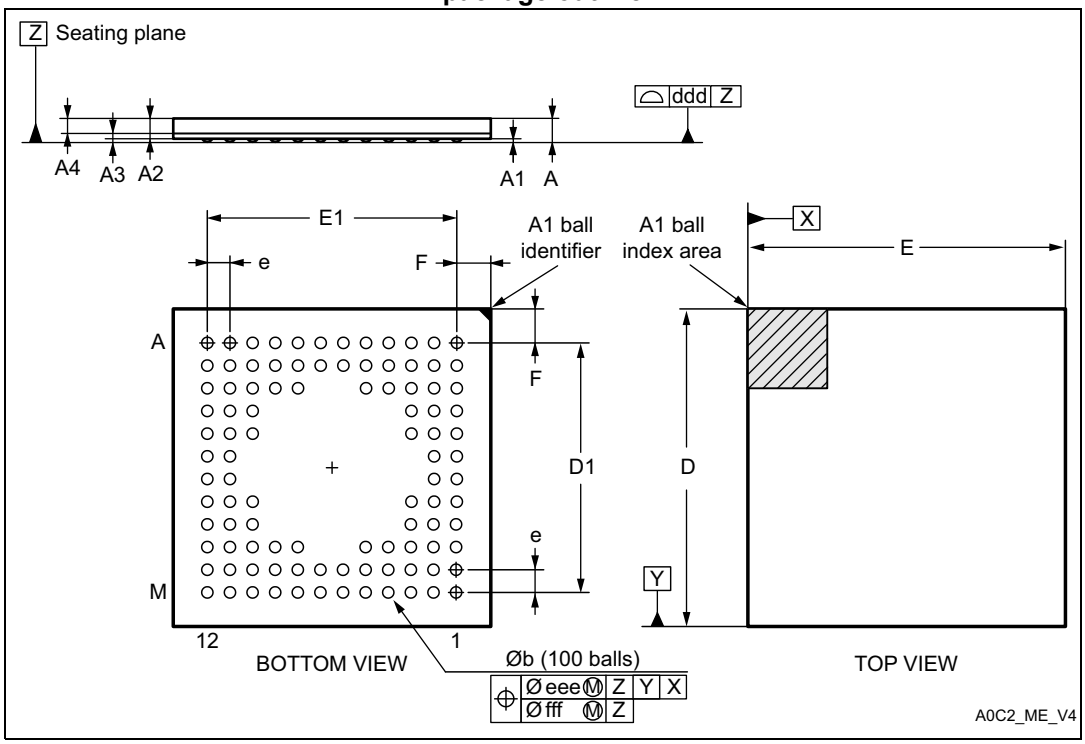

1. Drawing is not to scale.

Table 84. UFBGA100, 7 x 7 mm, 0.50 mm pitch, ultra fine pitch ball grid array package mechanical data

Symbol	millimeters			inches(1)		
	Min.	Typ.	Max.	Min.	Typ.	Max.
A	0.460	0.530	0.600	0.0181	0.0209	0.0236
A1	0.050	0.080	0.110	0.0020	0.0031	0.0043
A2	0.400	0.450	0.500	0.0157	0.0177	0.0197
A3	-	0.130	-	-	0.0051	-
A4	0.270	0.320	0.370	0.0106	0.0126	0.0146
b	0.200	0.250	0.300	0.0079	0.0098	0.0118
D	6.950	7.000	7.050	0.2736	0.2756	0.2776
D1	5.450	5.500	5.550	0.2146	0.2165	0.2185
E	6.950	7.000	7.050	0.2736	0.2756	0.2776
E1	5.450	5.500	5.550	0.2146	0.2165	0.2185
e	-	0.500	-	-	0.0197	-
F	0.700	0.750	0.800	0.0276	0.0295	0.0315

Table 84. UFBGA100, 7 x 7 mm, 0.50 mm pitch, ultra fine pitch ball grid array package mechanical data (continued)

Symbol	millimeters			inches(1)		
	Min.	Typ.	Max.	Min.	Typ.	Max.
ddd	-	-	0.100	-	-	0.0039
eee	-	-	0.150	-	-	0.0059
fff	-	-	0.050	-	-	0.0020

1. Values in inches are converted from mm and rounded to 4 decimal digits.

Figure 59. Recommended PCB design rules for pads (0.5 mm-pitch BGA)

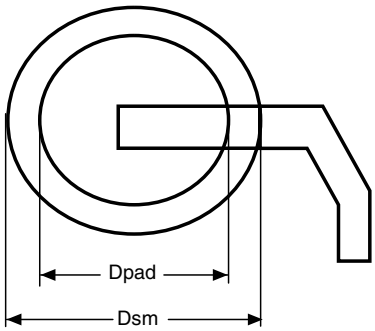

Pitch	0.5 mm
D pad	0.27 mm
Dsm	0.35 mm typ (depends on the soldermask registration tolerance)
Solder paste	0.27 mm aperture diameter

ai15495

1. Non solder mask defined (NSMD) pads are recommended.
2. 4 to 6 mils solder paste screen printing process.

Device marking

Figure 60. Example of UFBGA100 marking (top view)

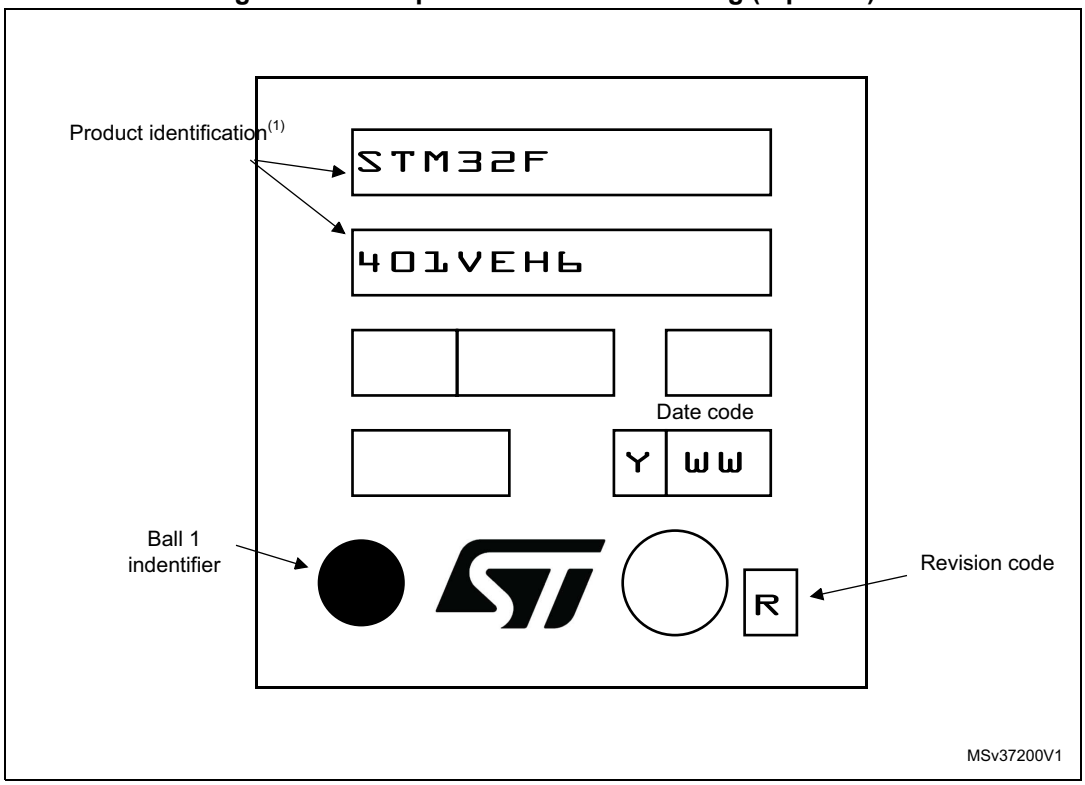

1. Parts marked as “ES”, “E” or accompanied by an Engineering Sample notification letter, are not yet qualified and therefore not yet ready to be used in production and any consequences deriving from such usage will not be at ST charge. In no event, ST will be liable for any customer usage of these engineering samples in production. ST Quality has to be contacted prior to any decision to use these Engineering samples to run qualification activity.

7.2 Thermal characteristics

The maximum chip junction temperature ($T_J$max) must never exceed the values given in *Table 14: General operating conditions on page 60*.

The maximum chip-junction temperature, T_J max., in degrees Celsius, may be calculated using the following equation:

T_J max = T_A max + (PD max x Θ_{JA})

Where:

- T_A max is the maximum ambient temperature in °C,
- Θ_{JA} is the package junction-to-ambient thermal resistance, in °C/W,
- PD max is the sum of P_{INT} max and $P_{I/O}$ max (PD max = P_{INT} max + $P_{I/O}$max),
- P_{INT} max is the product of I_{DD} and V_{DD}, expressed in Watts. This is the maximum chip internal power.

$P_{I/O}$ max represents the maximum power dissipation on output pins where:

$$P_{I/O} \text{ max} = \Sigma (V_{OL} \times I_{OL}) + \Sigma((V_{DD} - V_{OH}) \times I_{OH}),$$

taking into account the actual V_{OL} / I_{OL} and V_{OH} / I_{OH} of the I/Os at low and high level in the application.

Table 85. Package thermal characteristics

Symbol	Parameter	Value	Unit
Θ_{JA}	**Thermal resistance junction-ambient** UFQFPN48	32	°C/W
	Thermal resistance junction-ambient WLCSP49	51	
	Thermal resistance junction-ambient LQFP64	50	
	Thermal resistance junction-ambient LQFP100	42	
	Thermal resistance junction-ambient UFBGA100	56	

7.2.1 Reference document

JESD51-2 Integrated Circuits Thermal Test Method Environment Conditions - Natural Convection (Still Air). Available from www.jedec.org.

8 Part numbering

Table 86. Ordering information scheme

Example: STM32 F 401 C E Y 6 TR

Device family

STM32 = ARM-based 32-bit microcontroller

Product type

F = General-purpose

Device subfamily

401 = 401 family

Pin count

C = 48/49 pins

R = 64 pins

V = 100 pins

Flash memory size

D = 384 Kbytes of Flash memory

E = 512 Kbytes of Flash memory

Package

H = UFBGA

T = LQFP

U = UFQFPN

Y = WLCSP

Temperature range

6 = Industrial temperature range, –40 to 85 °C

Packing

TR = tape and reel

No character = tray or tube

Table 87. Device order codes

Reference	Order codes
STM32F401xD	STM32F401CDY6, STM32F401RDT6, STM32F401VDT6, STM32F401CDU6, STM32F401VDH6
STM32F401xE	STM32F401CEY6, STM32F401RET6, STM32F401VET6, STM32F401CEU6, STM32F401VEH6

9 Revision history

Table 88. Document revision history

Date	Revision	Changes
16-Jan-2014	1	Initial release.
24-Feb-2014	2	Updated Flash memory size in *Table 2: STM32F401xD/xE features and peripheral counts*. Added alternate functions mapped on PCx, PDx and PEx GPIOS in *Table 9: Alternate function mapping*
22-Jan-2015	3	Updated UFQFPN48 in *Table 3: Regulator ON/OFF and internal power supply supervisor availability*. Updated number of EXTI lines in *Section 3.10: External interrupt/event controller (EXTI)*. Updated *Table 54: I/O static characteristics* Added WLCSP49 *Figure 47: WLCSP49 0.4 mm pitch wafer level chip size recommended footprint* and *Table 80: WLCSP49 recommended PCB design rules (0.4 mm pitch)*. Updated *Figure 48: Example of WLCSP49 marking (top view).* Updated *Figure 51: Example of UFQFPN48 marking (top view).* Updated *Figure 54: Example of LQFP64 marking (top view).* Updated *Figure 57: Example of LQPF100 marking (top view).* Updated *Figure 60: Example of UFBGA100 marking (top view).* Added notes below all engineering sample marking schematics.

IMPORTANT NOTICE – PLEASE READ CAREFULLY

STMicroelectronics NV and its subsidiaries (“ST”) reserve the right to make changes, corrections, enhancements, modifications, and improvements to ST products and/or to this document at any time without notice. Purchasers should obtain the latest relevant information on ST products before placing orders. ST products are sold pursuant to ST’s terms and conditions of sale in place at the time of order acknowledgement.

Purchasers are solely responsible for the choice, selection, and use of ST products and ST assumes no liability for application assistance or the design of Purchasers’ products.

No license, express or implied, to any intellectual property right is granted by ST herein.

Resale of ST products with provisions different from the information set forth herein shall void any warranty granted by ST for such product.

ST and the ST logo are trademarks of ST. All other product or service names are the property of their respective owners.

Information in this document supersedes and replaces information previously supplied in any prior versions of this document.

© 2015 STMicroelectronics – All rights reserved