Video door phones

User guide

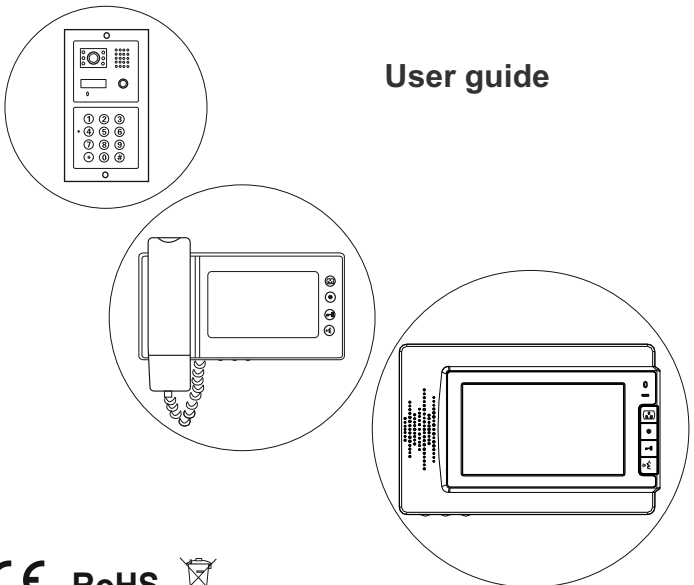

CE RoHS

Table of contents

Description of the door stations 3
Description of the symbols in the diagrams (door stations) 7
Programming of the door station with combination lock 8
Programming of the door station with card reader 10
Description of monitors 12
Description of the symbols in the diagrams (monitors) 21
Operating the monitor with memory..... 23
Installation 26
Wiring diagram 27
Wiring diagram of CCTV camera 41
Operating the video door phone..... 42
Warranty card 45

Description of the door stations

KK-01B, KK-01G, KK-01S

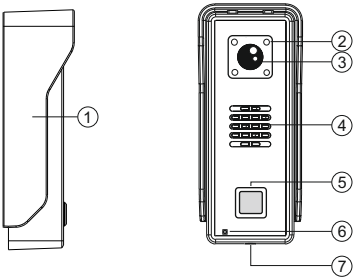

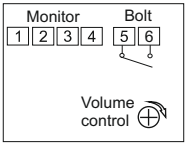

1: audio-red
2: ground-blue
3: camera power supply from the monitor-yellow
4: video-white
5: bolt-black
6: bolt-black

Dimensions: 55×135×39 mm

KK-03

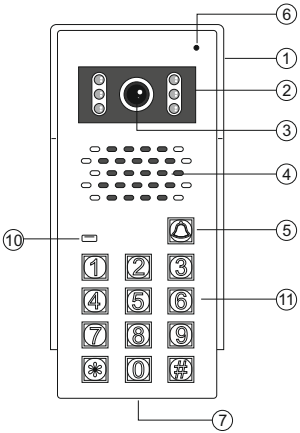

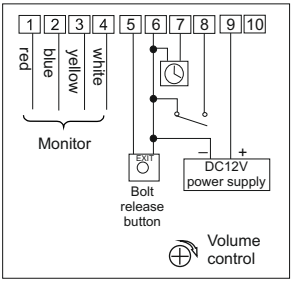

1: audio-red
2: ground-blue
3: camera power supply from the monitor-yellow
4: video-white
5: additional bolt release button
6: DC12-14,5V power supply* (-)/bolt (-) /bolt switch
7: access block for users 10-20 and 36-40
8: bolt (+)
9: DC12-14,5V power supply* (+)
10: do not connect

Dimensions: 75×182×60 mm

*** power supply FF: ZV-14**

KK-04

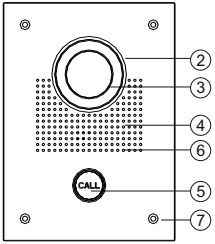

Dimensions: 150×203×55 mm
Installation box dimensions:
130×183×50 mm

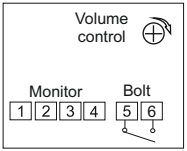

1: audio-red
2: ground-blue
3: camera power supply from the monitor-yellow
4: video-white
5: bolt-black
6: bolt-black

KK-05

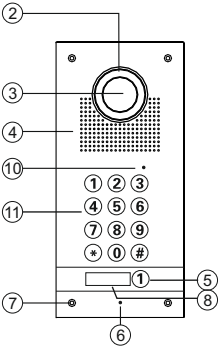

Dimensions: 120×250×51 mm
Installation box dimensions:
110×240×46 mm

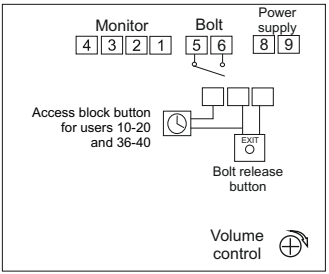

1: audio-red
2: ground-blue
3: camera power supply from the monitor-yellow
4: video-white
5: bolt
6: bolt
8: DC12-14,5V power supply* (+) red
9: DC12-14,5V power supply* (-) black

*** power supply FF: ZV-14**

KK-08

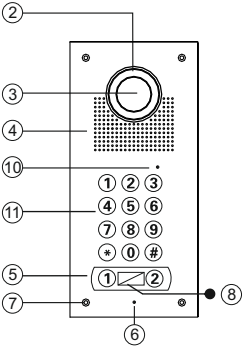

Dimensions: 120×250×51 mm
Installation box dimensions:
110×240×46 mm

Please note!
Remove the jumper J3
in all monitors and uniphones

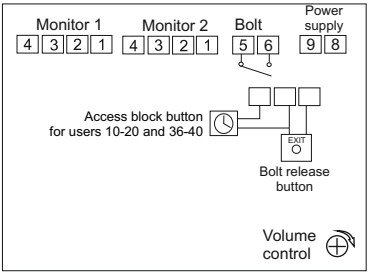

1: audio-red
2: ground-blue
3: camera power supply
from the monitor-yellow
4: video-white
5: bolt
6: bolt
8: DC12-14,5V power supply* (+) red
9: DC12-14,5V power supply* (-) black

*** power supply FF: ZV-14**

KK-08K

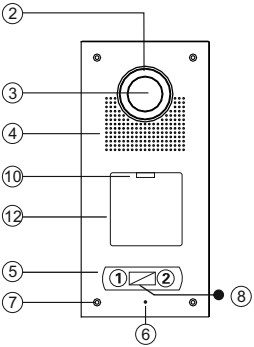

Dimensions: 120×250×51 mm
Installation box dimensions:
110×240×46 mm

Please note!
Remove the jumper J3
in all monitors and uniphones

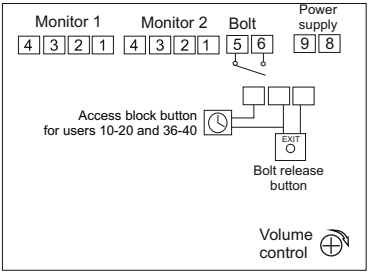

1: audio-red
2: ground-blue
3: camera power supply
from the monitor-yellow
4: video-white
5: bolt
6: bolt
8: DC12-14,5V power supply* (+) red
9: DC12-14,5V power supply* (-) black

*** power supply FF: ZV-14**

■ KK-09

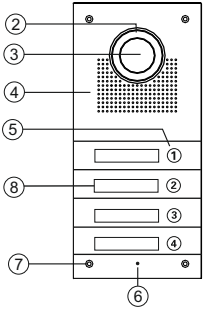

Dimensions: 120×250×51 mm
Installation box dimensions:
110×240×46 mm

Please note!
Remove jumper J3
in all monitors and uniphones

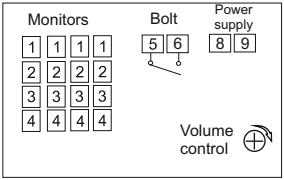

1: audio-red
2: ground-blue
3: camera power supply
from the monitor-yellow
4: video-white
5: bolt
6: bolt
8: DC12-14,5V power supply* (+) red
9: DC12-14,5V power supply* (-) black

*** power supply FF: ZV-14**

Description of the symbols in the diagrams (door stations)

No.	Function description
①	Protection cowl
②	LED
③	Camera
④	Speaker
⑤	Call button
⑥	Microphone
⑦	Camera mounting screw
⑧	Signboard for name
⑨	Cable ducting
⑩	LED indicating operating status of the keypad
⑪	Keyboard
⑫	Card reader

Technical data		
Main power supply, bolt, keypad or RFID power supply	KK-01	DC 12V from monitor
	KK-03	ZV-14 power supply
	KK-05÷KK-09	ZV-14 power supply
Power consumption	during operation 1,5 W	
Camera angle	about 70° (adjustable)	
Converter	1/3 CCD	
Minimum illumination	0,05 Lux	
Operating temperature range	-25°C ÷ +55°C	
IP	55	
Backlight	LED	

Programming of the door station with combination lock

1. **Programming user access code:**
   a) press [*], you will hear two short beeps:
   b) enter the master code ([1][2][3][4] – factory settings), you will hear three short beeps, red LED will begin to flash;
   c) enter user number from 01 to 40, you will hear two short beeps (users with numbers from 31 to 40 can open the door for an indefinite period of time - the doors remain open until re-entering the code);
   d) enter a 4-digit user code, you will hear 3 short beeps;
   e) return to step 3 to set more users or press [*] to complete the programming; after pressing [*] you will hear five beeps.

2. **Deleting user code:**
   a) press [*], you will hear two short beeps;
   b) enter the administrator code, you will hear three short beeps, red LED will begin to flash;
   c) enter user number from 01 to 40 that you want to delete, you will hear two short beeps;
   d) press [#], you will hear three short beeps;
   e) return to step 3 in case of removing more user codes or press [*] to complete the removal, after pressing [*] you will hear five short beeps.

3. **Programming the lock opening time:**
   a) press [*], you will hear two short beeps;
   b) enter the administrator code, you will hear three short beeps, red LED will begin to flash;
   c) enter [0][0], you will hear two short beeps;
   d) enter the required opening time from 01 to 99 seconds (2 digits) you will hear three short beeps;
   e) press [*] to complete programming, you will hear five short beeps.

4. **Changing the administrator code:**
   (factory set master code is: 1234)
   a) disconnect the power supply;
   b) press and hold the [*] button, connect the power (while holding the button pressed), door station will generate a long, continuous sound;
   c) when the sound is over, please release the button [*], you will hear one short beep and a red LED will flash;
   d) enter new, four-digit administrator code.

5. Opening the door with a code

a) enter a 4-digit user code, the red LED lights, the door will open.

6. Reset all user codes (except the administrator code)

a) press [*], you will hear two short beeps;
b) enter administrator code, you will hear three short beeps, red LED will begin to flash;
c) press [#], you will hear two short beeps, the LED flashes;
d) press [#], you will hear two short beeps, the LED flashes;
e) press [#] successively six times, you will hear one short beep, the LED flashes;
f) press [#], you will hear five short beeps, the LED goes out, the system reset.

Programming of the door station with card reader

1. Adding a user card with the MASTER card:

a) Bring the MASTER card close to the reader, you will hear one short and one long beep;
b) Then enter the last 6 digits of the card number or move it closer to the reader, saving your card in the memory will be confirmed with long beep;
c) If you want to add more cards, repeat step 2 as many times as needed;
d) To exit the card adding mode, bring the MASTER card close to the reader, you will hear three short beeps – the device is ready for operation.

2. Enter programming mode:

PLEASE NOTE!
The DH 12-R remote control is necessary for programming the door station. The remote control is not included in the door station package.

a) to enter the programming mode, point the remote control at LED located on the door station and enter the factory code [*][#][4][5][6][7][#], you will hear a tone confirming the change of the operating mode, and the LED located on the station will change its color from red to orange;
b) exit the programming mode by pressing the [*], the tone and LED color change to red will confirm a return to operating mode.

3. Adding user card:

a) Enter the programming mode (see point 1);
b) Press number [1] on the remote control, you will hear a long beep;
c) Enter the last 6 digits of the card number or bring it closer to the reader – short beep means the card was accepted, the next long beep confirms card saving;
d) If you want to add more cards, repeat step 3 as many times as needed;
e) If you bring closer a card that is already registered, you will hear four short beeps;
f) To exit the user card adding mode, press [*][*].

4. Removing the card:

a) To remove the registered card the device should be put in to a programming mode (see point 1);
b) Press number [2] on the remote control, you will hear a long beep;
c) Enter the last 6 digits of the card number you want to delete or bring it closer to the reader. You will hear one short and one long beep confirming the removal of the card;
d) To exit the user card adding mode, press [*][*].

5. Removing all cards:

1) Enter the programming mode (see point 1);
2) Press number [9][9] on the remote control, you will hear a long beep. Wait for the audio signal to end, it will confirm the deletion of all cards from the door station memory;
3) Return to operation after pressing [*].

6. Administrator code change:

1) Enter the programming mode (see point 1);
2) Press number [8] on the remote control, you will hear a long beep;
3) Enter the new four-digit code and confirm by pressing [#], re-enter the new code and confirm it by pressing [#]. You will hear a long beep confirming the change of the code administrator;
4) Return to operation after pressing [*].

7. Programming the MASTER card:

1) Enter the programming mode (see point 1);
2) Press number [0][7] on the remote control, you will hear a long beep and the LED will change its color to orange;
3) Enter the last 6 digits of the card number that is to be the MASTER card or bring it closer to the reader, you will hear one short and one long beep confirming your card has been saved in the memory;
4) To exit card adding mode, press [*][*], you will hear a long beep and the LED will change its color to red – the device is ready to work;
5) MASTER cards cannot be removed, only new card can be programmed in place of damaged or lost card.

8. Restoring the forgotten administrator code:

1) Turn off power supply for at least 10 seconds;
2) Connect the power supply and when the LED is flashing (six times), press the [#] on the remote control, you will hear the beep confirming the restoration of the MASTER code to default value: 4567.

9. Programming the lock opening time:

1) Enter the programming mode (see point 1);
2) Press number [4] on the remote control, you will hear long beep;
3) Enter the desired time of electric lock opening from 01 to 99 seconds (two-digits);
4) You will hear a long beep confirming the change in lock time opening;
5) Exit the programming mode by pressing [*].

10. Opening the lock with the card:

1) Bring the card to the reader at a distance of 5 cm;
2) Opening the lock is indicated by the green LED on the door station.

Description of monitors

■ MK-03G (black), MK-03W (white)

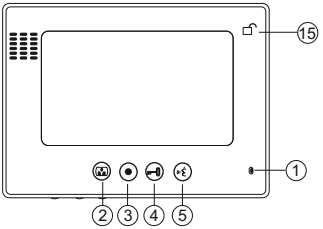

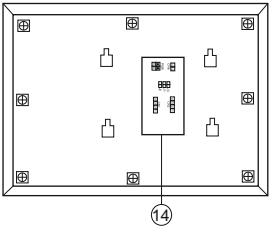

Dimensions: 241×161×23 mm

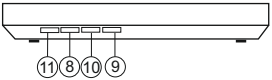

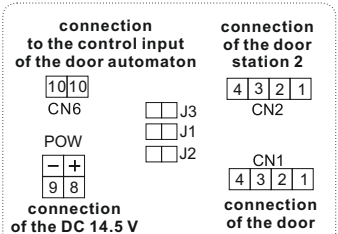

1) audio-red
2) ground-blue
3) camera power supply-yellow
4) video-white
8) (+) of power supply-red
9) (-) of power supply-black
10) connection to the control input of the door automaton, it is a closing contact of the NO relay (dry contact).

Do not connect voltages greater than 24 V, the current should not exceed 150 mA.

J1, J2, J3 jumper configuration:

J1: switching on or off the chime in the door station
- a) jumper put on – audible chime
- b) jumper removed – chime off

J2: fit the cable in the video line
- a) jumper put on – coaxial cable, if the system has more than one monitor installed, leave only the jumper in the last monitor and remove it in all the other monitors
- b) jumper removed – other cable

J3: switching on or off the backlight of the call button and the signboard in KK-04 door station:
- a) jumper put on – backlight on
- b) jumper removed – backlight off

In case of door stations other than KK-04, **the jumper must be removed**.

■ MK-04B, MK-04W

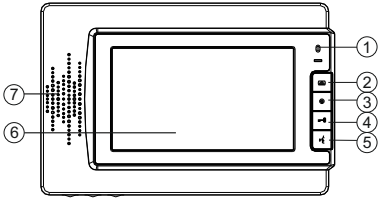

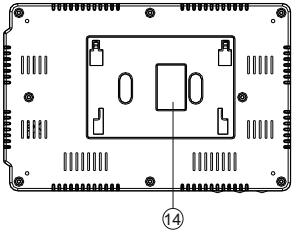

Dimensions: 245×160×18 mm

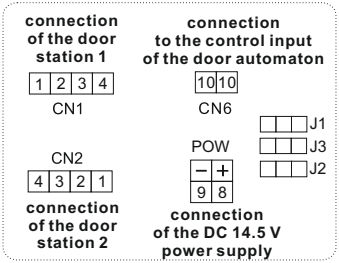

1) audio-red
2) ground-blue
3) camera power supply-yellow
4) video-white
8) (+) of power supply-red
9) (-) of power supply-black
10) connection to the control input of the door automaton, it is a closing contact of the NO relay (dry contact).

Do not connect voltages greater than 24 V, the current should not exceed 150 mA.

J1, J2, J3 jumper configuration:

J1: switching on or off the chime in the door station
a) jumper put on – audible chime
b) jumper removed – chime off

J2: fit the cable in the video line
a) jumper put on – coaxial cable, if the system has more than one monitor installed, leave only the jumper in the last monitor and remove it in all the other monitors
b) jumper removed – other cable

J3: switching on or off the backlight of the call button and the signboard in KK-04 door station:
a) jumper put on – backlight on
b) jumper removed – backlight off

In case of door stations other than KK-04, **the jumper must be removed**.

 - jumper closed

 - jumper open

■ MK-06B

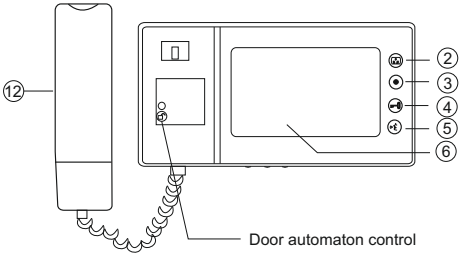

Dimensions: 282×135×23 mm

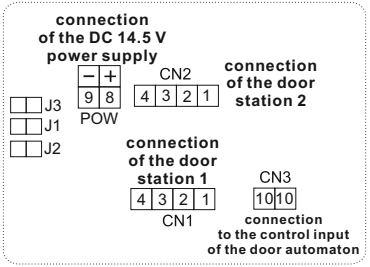

1) audio-red
2) ground-blue
3) camera power supply-yellow
4) video-white
8) (+) of power supply-red
9) (-) of power supply-black
10) connection to the control input of the door automaton, it is a closing contact of the NO relay (dry contact).

Do not connect voltages greater than 24 V, the current should not exceed 150 mA.

J1, J2, J3 jumper configuration:

J1: switching on or off the chime in the door station
a) jumper put on – audible chime
b) jumper removed – chime off

J2: fit the cable in the video line
a) jumper put on – coaxial cable, if the system has more than one monitor installed, leave only the jumper in the last monitor and remove it in all the other monitors
b) jumper removed – other cable

J3: switching on or off the backlight of the call button and the signboard in KK-04 door station:
a) jumper put on – backlight on
b) jumper removed – backlight off

In case of door stations other than KK-04, **the jumper must be removed**.

■ MK-06WF

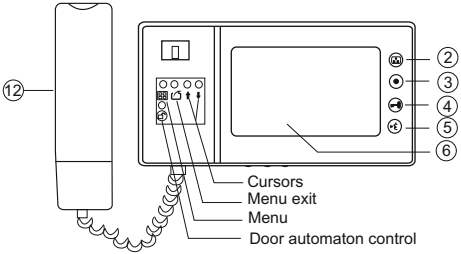

Dimensions: 282×135×23 mm

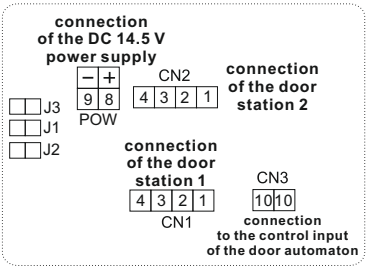

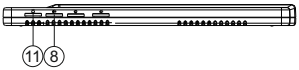

1) audio-red
2) ground-blue
3) camera power supply-yellow
4) video-white
8) (+) of power supply-red
9) (-) of power supply-black
10) connection to the control input of the door automaton, it is a closing contact of the NO relay (dry contact).

Do not connect voltages greater than 24 V, the current should not exceed 150 mA.

J1, J2, J3 jumper configuration:

J1: switching on or off the chime in the door station
a) jumper put on – audible chime
b) jumper removed – chime off

J2: fit the cable in the video line depending on the number of monitors in the system:
a) 1 monitor: jumper put on + resistor on the cables between video and ground
b) 2 monitors: jumpers in two monitors put on
c) 3 monitors: jumper removed in first monitor, put on in monitors 2 and 3
d) 4 monitors: jumper removed in first and second monitor, put on in 3 and 4

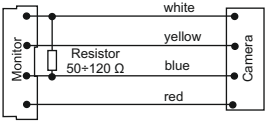

J3: switching on or off the backlight of the call button and the signboard in KK-04 door station:
a) jumper put on – backlight on
b) jumper removed – backlight off

In case of door stations other than KK-04, **the jumper must be removed**.

■ MK-07WB

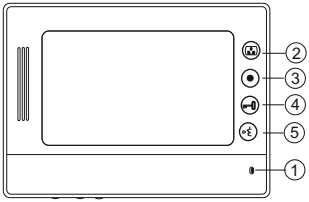

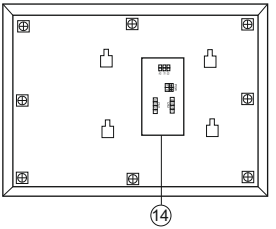

Dimensions: 240×170×23 mm

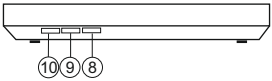

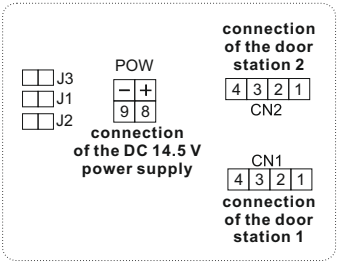

1) audio-red
2) ground-blue
3) camera power supply-yellow
4) video-white
8) (+) of power supply-red
9) (-) of power supply-black
10) connection to the control input of the door automaton, it is a closing contact of the NO relay (dry contact).

Do not connect voltages greater than 24 V, the current should not exceed 150 mA.

J1, J2, J3 jumper configuration:

J1: switching on or off the chime in the door station
a) jumper put on – audible chime
b) jumper removed – chime off

J2: fit the cable in the video line
a) jumper put on – coaxial cable, if the system has more than one monitor installed, leave only the jumper in the last monitor and remove it in all the other monitors
b) jumper removed – other cable

J3: switching on or off the backlight of the call button and the signboard in KK-04 door station:
a) jumper put on – backlight on
b) jumper removed – backlight off

In case of door stations other than KK-04, **the jumper must be removed**.

MK-08F

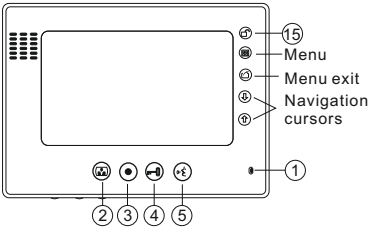

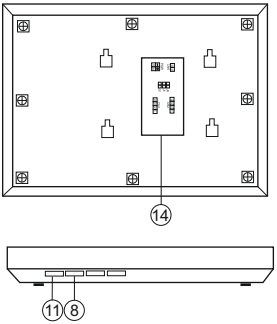

Dimensions: 241×161×23 mm

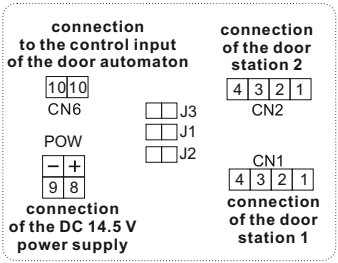

1) audio-red
2) ground-blue
3) camera power supply-yellow
4) video-white
8) (+) of power supply-red
9) (-) of power supply-black
10) connection to the control input of the door automaton, it is a closing contact of the NO relay (dry contact).

Do not connect voltages greater than 24 V, the current should not exceed 150 mA.

J1, J2, J3 jumper configuration:

J1: switching on or off the chime in the door station
- a) jumper put on – audible chime
- b) jumper removed – chime off

J2: fit the cable in the video line depending on the number of monitors in the system:
- a) 1 monitor: jumper put on + resistor on the cables between video and ground
- b) 2 monitors: jumpers in two monitors put on
- c) 3 monitors: jumper removed in first monitor, put on in monitors 2 and 3
- d) 4 monitors: jumper removed in first and second monitor, put on in 3 and 4

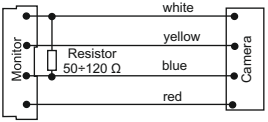

J3: switching on or off the backlight of the call button and the signboard in KK-04 door station:
- a) jumper put on – backlight on
- b) jumper removed – backlight off

In case of door stations other than KK-04, **the jumper must be removed**.

■ MK-09W

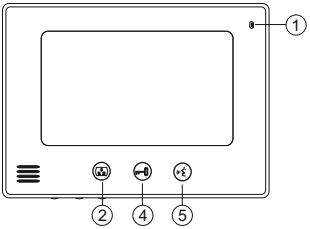

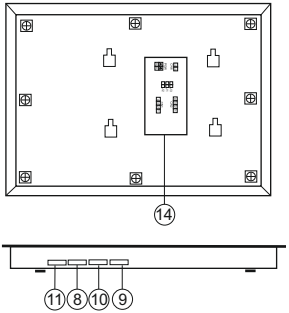

Dimensions: 218×167×33 mm

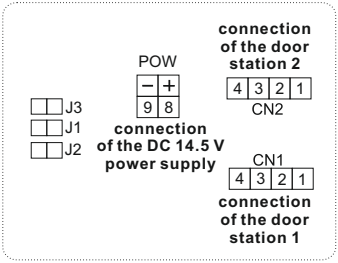

1) audio-red
2) ground-blue
3) camera power supply-yellow
4) video-white
8) (+) of power supply-red
9) (-) of power supply-black

J1, J2, J3 jumper configuration:

J1: switching on or off the chime in the door station
a) jumper put on – audible chime
b) jumper removed – chime off
J2: fit the cable in the video line
a) jumper put on – coaxial cable, if the system has more than one monitor installed, leave only the jumper in the last monitor and remove it in all the other monitors
b) jumper removed – other cable
J3: switching on or off the backlight of the call button and the signboard in KK-04 door station:
a) jumper put on – backlight on
b) jumper removed – backlight off
In case of door stations other than KK-04, **the jumper must be removed**.

MK-10F

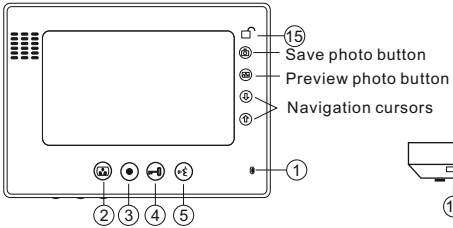

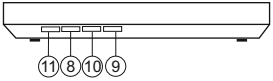

Dimensions: 241×161×23 mm

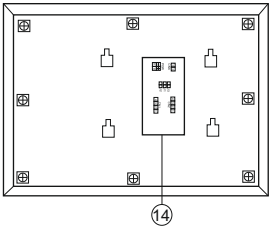

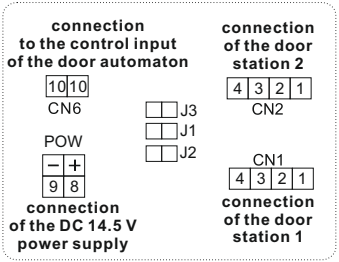

1) audio-red
2) ground-blue
3) camera power supply-yellow
4) video-white
8) (+) of power supply-red
9) (-) of power supply-black
10) connection to the control input of the door automaton, it is a closing contact of the NO relay (dry contact).

Do not connect voltages greater than 24 V, the current should not exceed 150 mA.

J1, J2, J3 jumper configuration:

J1: switching on or off the chime in the door station
- a) jumper put on – audible chime
- b) jumper removed – chime off

J2: fit the cable in the video line
- a) jumper put on – coaxial cable, if the system has more than one monitor installed, leave only the jumper in the last monitor and remove it in all the other monitors
- b) jumper removed – other cable

J3: switching on or off the backlight of the call button and the signboard in KK-04 door station:
- a) jumper put on – backlight on
- b) jumper removed – backlight off

In case of door stations other than KK-04, **the jumper must be removed**.

■ MU-01

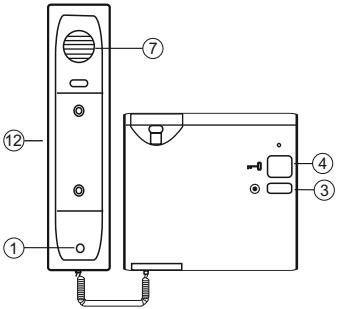

Dimensions: 100×200×45 mm

■ MU-02

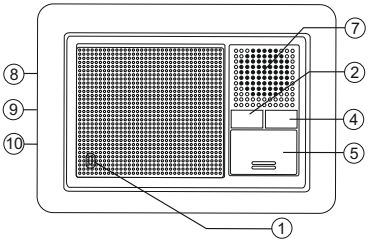

Dimensions: 160×120×42 mm

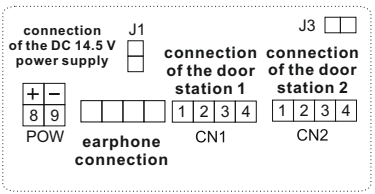

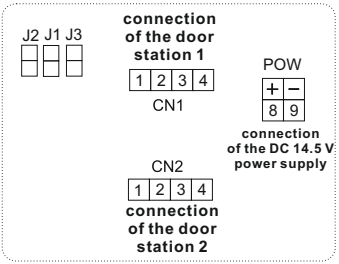

1) audio-red
2) ground-blue
3) camera power supply-yellow
4) video-white
8) (+) of power supply-red
9) (-) of power supply-black

J1, J2, J3 jumper configuration:

J1: switching on or off the chime in the door station
a) jumper put on – audible chime
b) jumper removed – chime off
J2: fit the cable in the video line
a) jumper put on – coaxial cable, if the system has more than one monitor installed, leave only the jumper in the last monitor and remove it in all the other monitors
b) jumper removed – other cable
J3: switching on or off the backlight of the call button and the signboard in KK-04 door station:
a) jumper put on – backlight on
b) jumper removed – backlight off
In case of door stations other than KK-04, **the jumper must be removed**.

Description of the symbols in the diagrams (monitors)

MK-03G (black), MK-03W (white), MK-04W, MK-04B, MK-06B, MK-06WF, MK-07WB, MK-09W, MU-01, MU-02

No.		Function description
①		Microphone
②		Camera preview button
③		Intercom button
④		Bolt release button
⑤		Call answering button
⑥		Screen
⑦		Speaker
⑧		Call volume adjusting
⑨		Brightness adjusting
⑩		Color adjusting
⑪		Ringer volume adjusting
⑫		Earphone
⑬		LED
⑭		Installation connectors
⑮		Door automaton control

Technical data	
Power supply	DC 14,5V
Power consumption	During operation 7W
Screen	10" LCD / 7"LCD / 4"LCD
Operating temperature range	-10°C ÷ +55°C

■ MK-08F, MK-10F

No.		Function description
①		Microphone
②		Camera preview button
③		Intercom button
④		Bolt release button
⑤		Call answering button
⑥		Screen
⑦		Speaker
⑧		Call volume adjusting
⑨		Brightness adjusting
⑩		Color adjusting
⑪		Ringer volume adjusting
⑫		Earphone
⑬		LED
⑭		Installation connectors
⑮		Door automaton control
⑯		Menu
⑰		Menu exit
⑱		Navigation cursor UP
⑲		Navigation cursor DOWN
⑳		Browse photos

Technical data	
Power supply	DC 14,5V
Power consumption	During operation 7W
Screen	10" LCD / 7"LCD / 4"LCD
Operating temperature range	-10°C ÷ +55°C

Operating the monitor with memory

■ MK-08F

Monitor memory can store up to 100 photos. If the memory is full, oldest images are automatically deleted and new ones will be saved in their place.

After pressing the call button by the guest, the device automatically saves one photo from the camera after 3 seconds from pressing the button. Switching the monitor to preview mode will also automatically save 1 photo. The blue LED below the memory control button indicates that a photo not yet viewed is stored in the memory.

Viewing photos

When you press ⇧ or ⇩ arrow the screen will display the latest photo stored in the memory. If there are not yet viewed photos in the memory, the **Unseen** message will be displayed in the upper left corner of the screen with a number indicating the number of newly saved photos. Pressing ⇧ or ⇩ arrows chooses older or newer photos. To exit this menu press ⌂ button or wait 10 seconds without executing any other operation.

Deleting photos

Pressing the ⊞ button opens the menu window. By pressing the ⊞ button the appropriate number of times we go to the window **Remove all** - pressing the ⇧ or ⇩ arrow will **erase all photos from memory**. To exit this menu press ⌂ button or wait 10 seconds without executing any other operation.

Adjusting display settings – brightness, contrast, color saturation

Pressing the ⊞ button opens the menu window. By pressing the ⊞ button the appropriate number of times we go to the window **Brightness, Contrast** or **Color** – using ⇧ and ⇩ arrows you can adjust desired parameter in the range of 0 to 100. To exit this menu press ⌂ button or wait 10 seconds without executing any other operation.

Setting the date

Pressing the ⊞ button opens the menu window. By pressing the ⊞ button the appropriate number of times we go to the window **Date** - pressing the ⇧ or ⇩ arrow will cause the displayed year to flash - we set the desired year with arrow, then, by pressing the button ⊞, we move to the month and day setting.

To exit this menu press ⌂ button or wait 10 seconds without executing any other operation

continued from previous page **MK-08F**

Setting the time

Pressing the button opens the menu window. By pressing the button the appropriate number of times we go to the window **Time** - pressing the or arrow will cause the displayed hour to flash - we set the desired hour with arrow, then, by pressing the button, we move to the minutes and seconds setting.

To exit this menu press button or wait 10 seconds without executing any other operation.

■ MK-10F

Monitor memory can store up to 400 photos. If the memory is full, oldest images are automatically deleted and new ones will be saved in their place.

Automatic saving of photos

After pressing the call button by the guest, the device automatically saves one photo from the camera after 5 seconds from pressing the button. Switching the monitor to preview mode will also automatically save 1 photo.

Manual saving of images

After call by the guest or when the preview is enabled, each time you press the button one photo will be saved.

Viewing photos

After pressing the button the thumbnails of stored photos will be displayed on screen. The screen can display up to six thumbnails. To select desired thumbnail, use or cursor – thumbnail will be highlighted with yellow border. Pressing the button will display selected photo in full screen mode. With or arrow or you can browse the previous or next photos in full size or, by pressing the button, return to the thumbnail preview.

If no button is pressed for 10 seconds, the monitor automatically returns to standby mode.

Deleting individual photos

To delete the photos you need to enter the thumbnail preview mode. We choose the desired thumbnail by highlighting it and by pressing the button we delete photo. Photo can also be deleted when it is displayed in full size, also by pressing the button.

Deleting all photos

Pressing arrow for three seconds in preview mode will delete all photos.

continued from previous page **MK-10F**

Setting the clock

Pressing the button in standby mode (standby) for 5 seconds will open the menu for setting the clock. The screen displays the date and time in format: yyyy-mm-dd hh:mm. The corresponding values in the flashing fields are set with or arrows. Settings are confirmed by pressing button, the device automatically switches to set the following values of the current month, day of the week, hour and minutes. After the minutes setting and the confirmation with button, the monitor switches to standby mode.

Installation

1. Do not install the unit in a location exposed to dust, direct sunlight, high temperatures or high humidity.
2. Do not seal the camera with silicone.
3. Do not install the unit in areas exposed to vibration or shock.

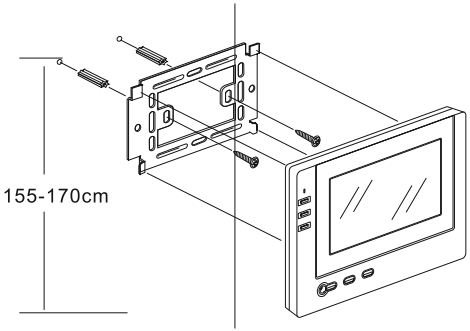

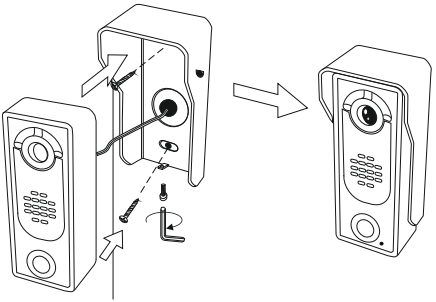

1. Choose a place to install the monitor.
2. Attach the wall mount for the monitor installation (optimum height to place the monitor is 155÷170 cm).
3. Connect the camera wires to the monitor.
4. Attach the monitor to the mount.
5. Connect the monitor power supply.

Wiring diagram

1. Before installing and operating this video door phone set, you should carefully read the following instructions. Improper connection and damages caused by it are not covered by the warranty.

2. When connecting the power supply to the video door phone, pay special attention to the correct connection of the power supply polarity!
   Incorrect connection will damage the video door phone!

3. For installation up to 30 m use cables with a minimum diameter of 0.50 mm; for installation of more than 30 m - min. 0.70 mm.
   For the best image quality in video line, we recommend use of a 75 Ω coaxial cable.
4. ZV-14 power supply is recommended to power the bolt.

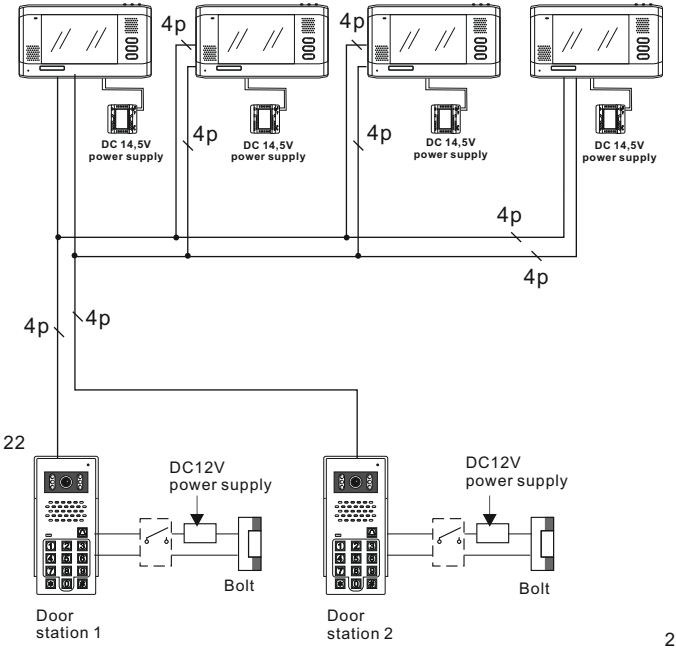

■ KK-01 / KK-04

1 door station + 1 monitor or uniphone

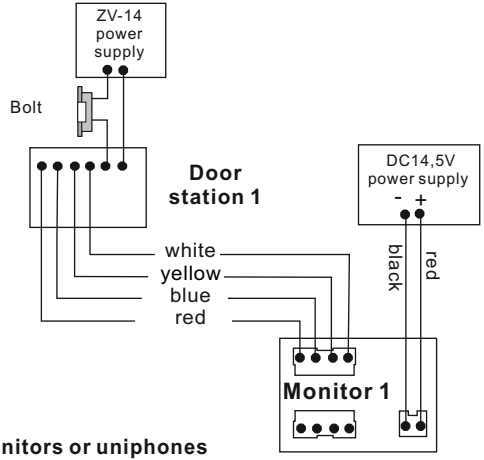

1 door station + 2 monitors or uniphones

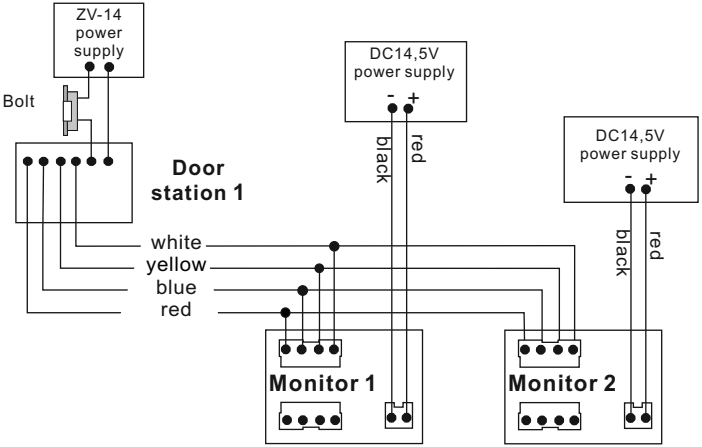

■ KK-01 / KK-04

2 door station + 1 monitor or uniphone

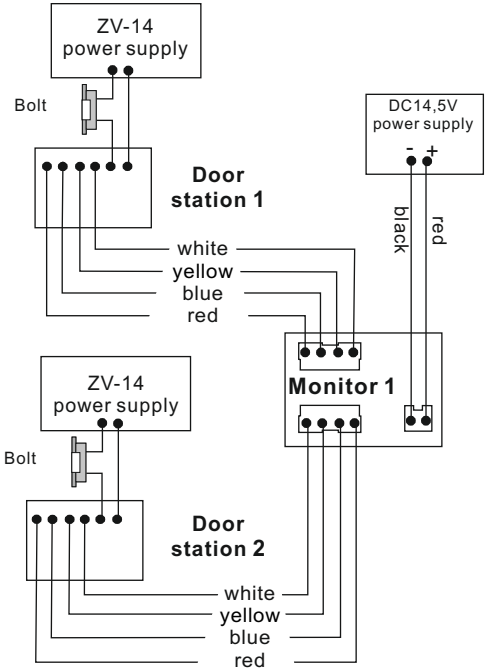

■ KK-01 / KK-04

2 door station + 2 monitors or uniphones

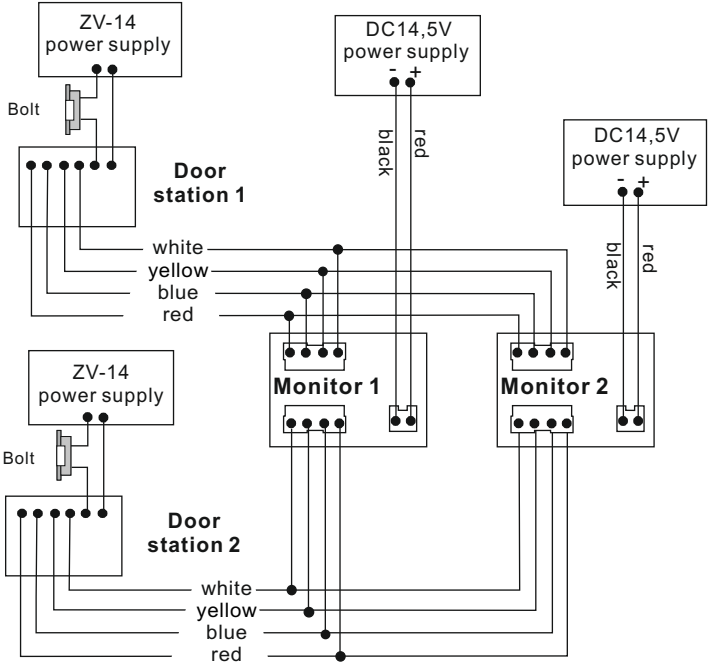

■ KK-03

1 door station
+ 1 monitor or uniphone

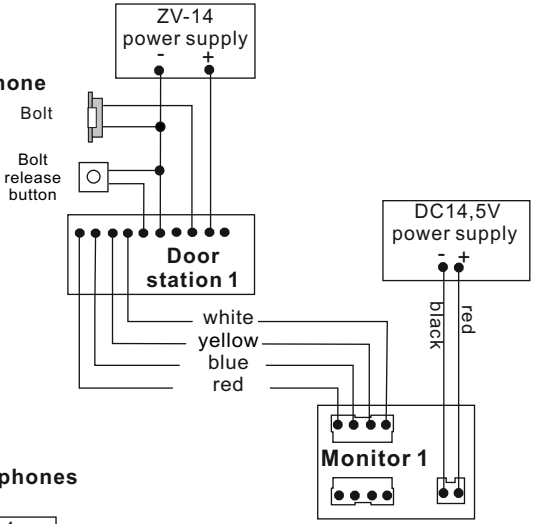

1 door station
+ 2 monitors or uniphones

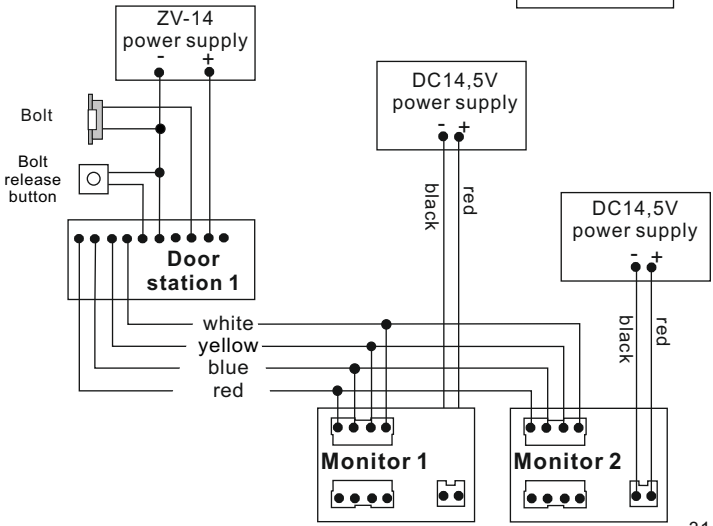

■ KK-03

2 door stations + 1 monitor or uniphone

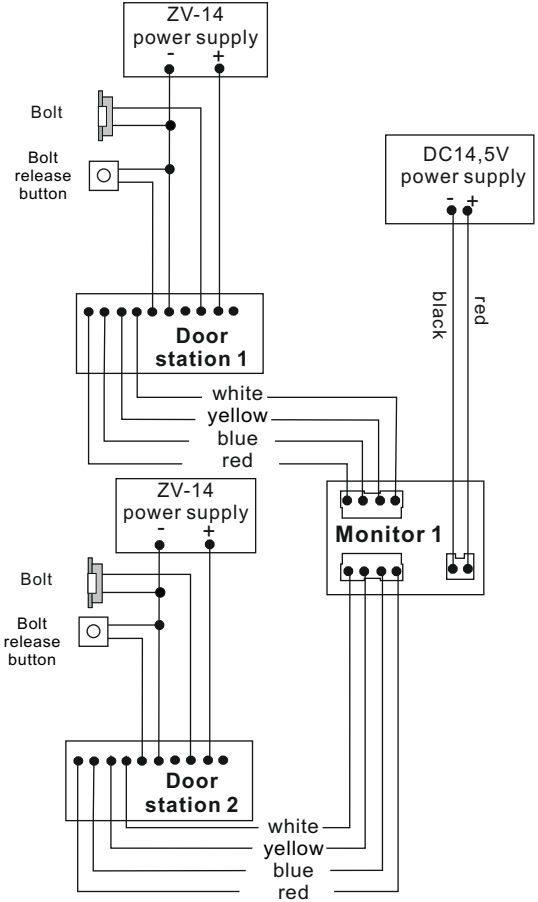

■ KK-03

2 door stations + 2 monitors or uniphones

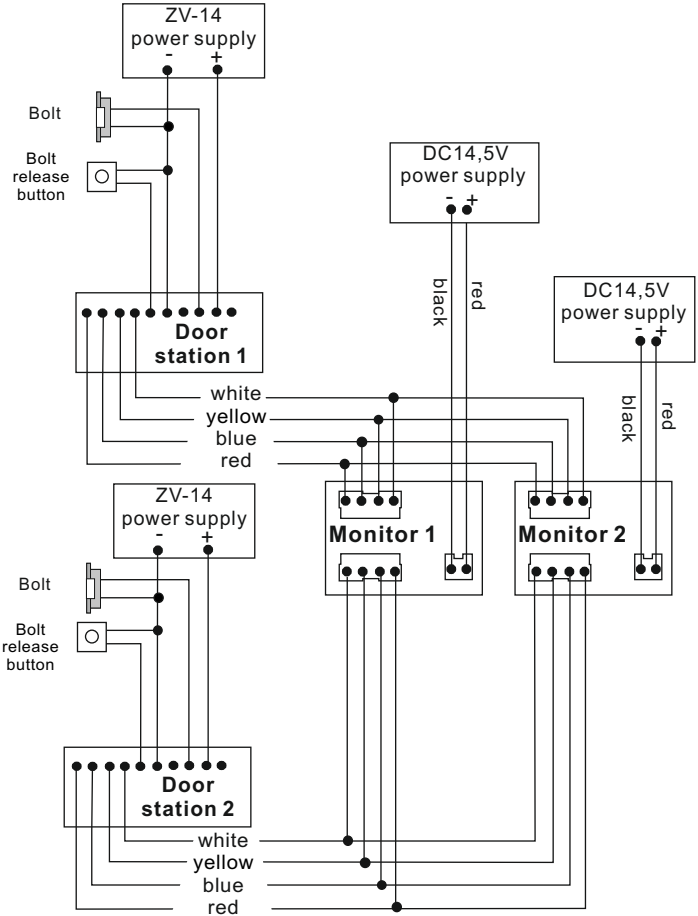

■ KK-05

1 door station
+ 1 monitor or uniphone

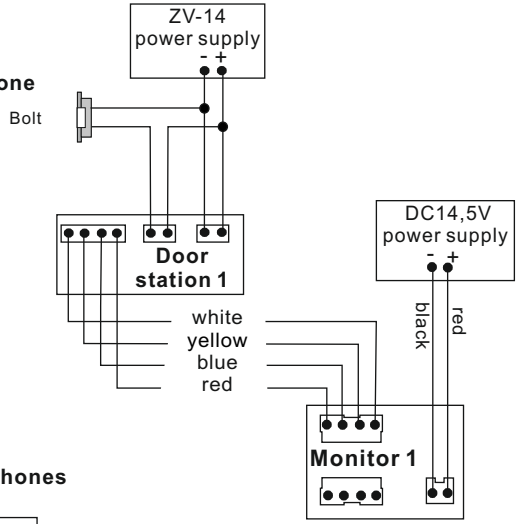

1 door station
+ 2 monitors or uniphones

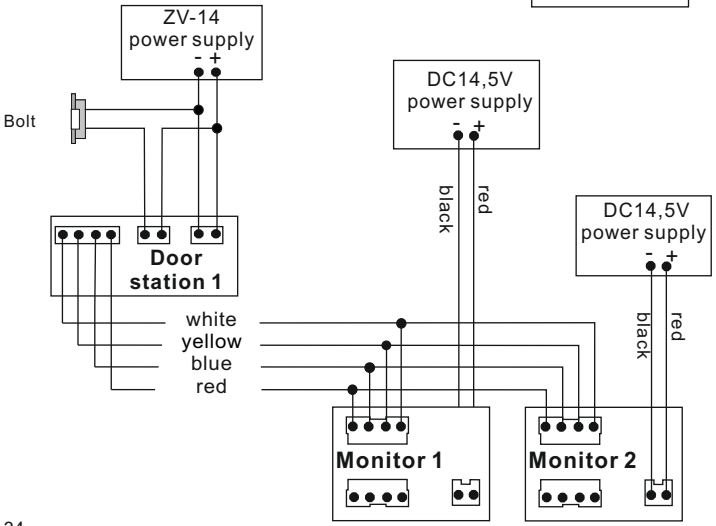

■ KK-05

2 door stations + 1 monitor or uniphone

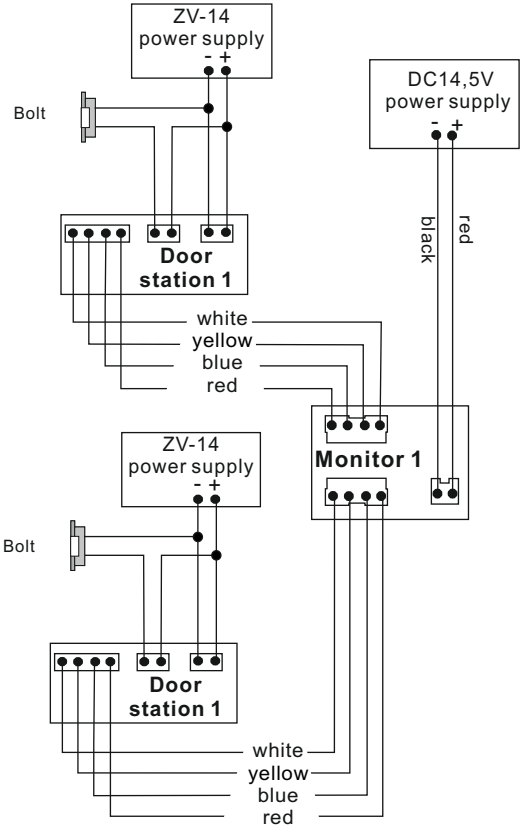

■ KK-05

2 door stations + 2 monitors or uniphones

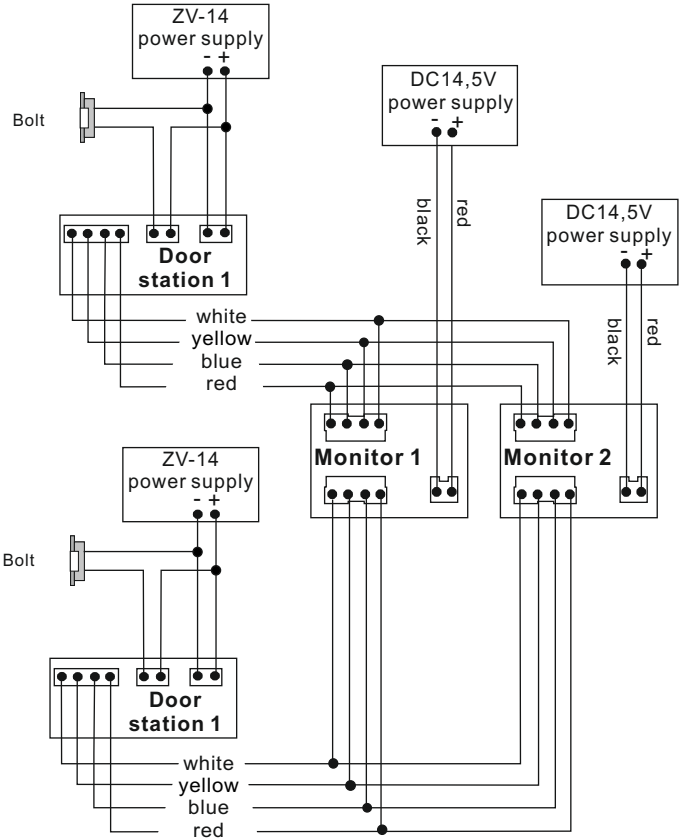

■ KK-08 / KK-08K

1 door station + 2 monitors or uniphones

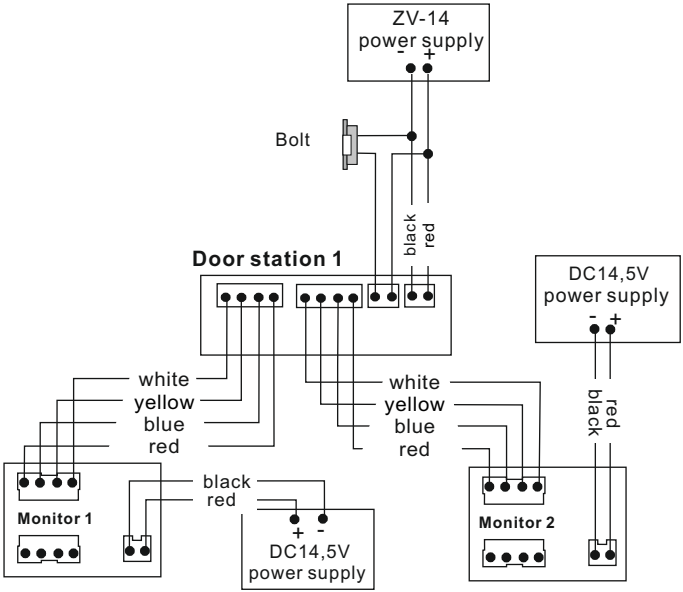

■ KK-08 / KK-08K

2 door stations + 2 monitors or uniphones

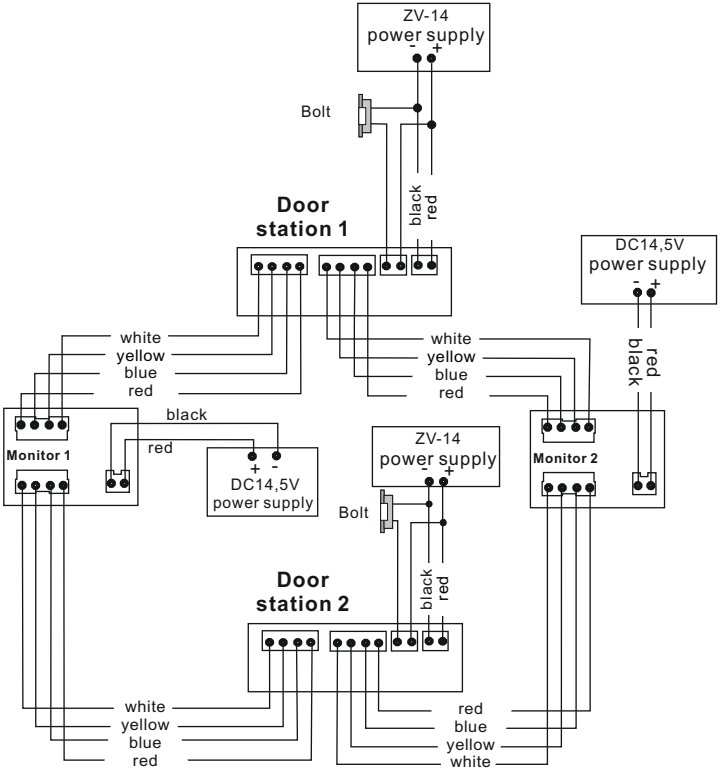

■ KK-08 / KK-08K

1 door station + 4 monitors or uniphones

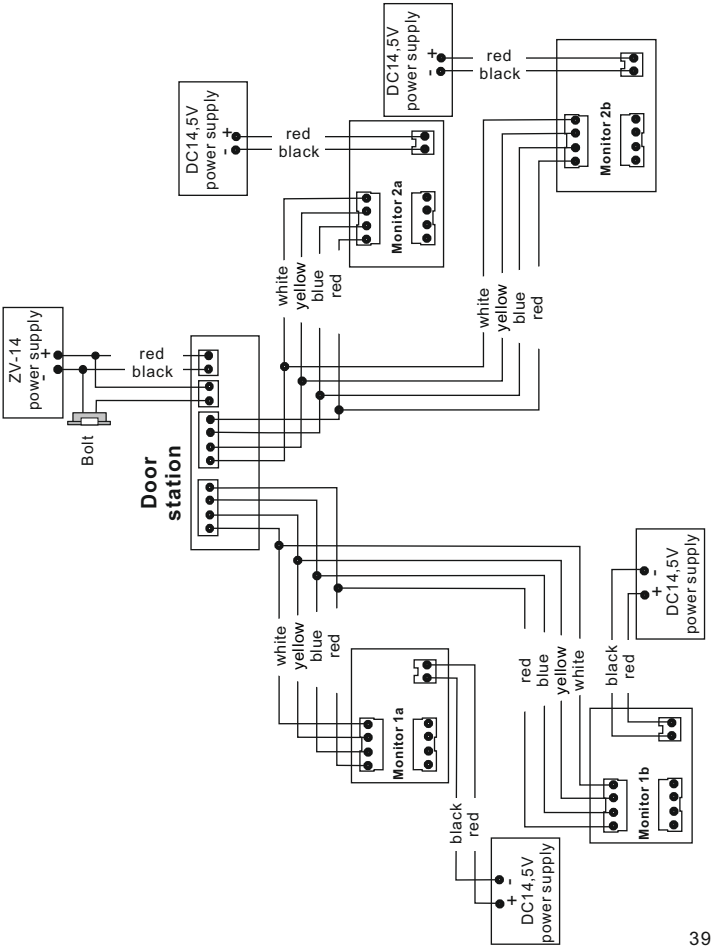

■ KK-09

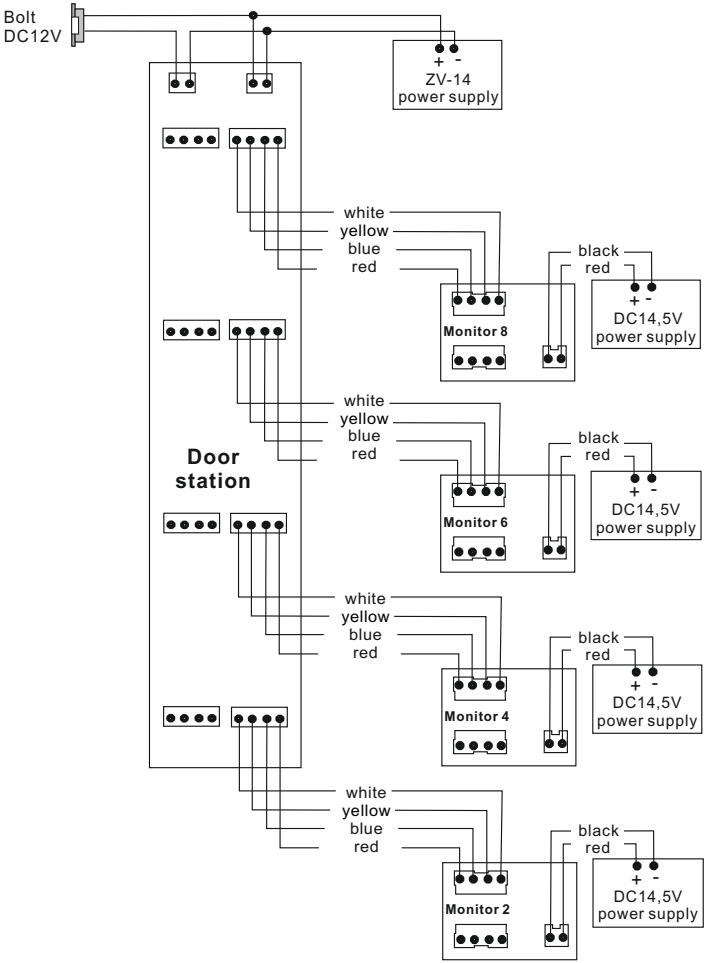
Bolt
DC12V
+ -
ZV-14
power supply
white
yellow
blue
red
black
red
Monitor 8
+ -
DC14,5V
power supply
Door
station
Monitor 6
Monitor 4
Monitor 2

Wiring diagram of CCTV camera

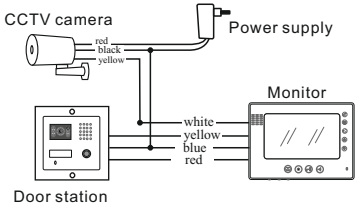

In the case of low fence you can connect any CCTV camera instead of a camera in the door station.

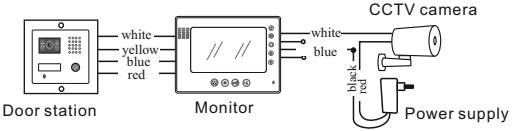

Instead of a second door station you can install any CCTV camera.

Operating the video door phone

Calls

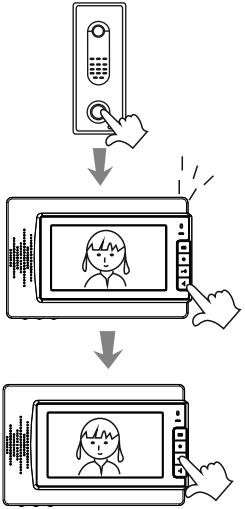

1) Guest presses the call button on the camera.

2) The monitor displays an image of the visitor and plays the chime, press button to communicate with the visitor.
3) If no one answers, the monitor automatically turns off after 1 minute.

4) If you want to open the door, press the door release button .

Preview

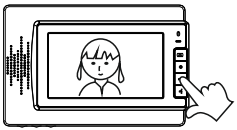

1) If you want to observe the surroundings located in front of the camera on the monitor, press the preview button .

2) If two cameras are installed in the system:

a) press the button once: turn on the camera1
b) press the button for a second time: turn on the camera 2
c) press the button for a third time: the monitor turns off

Intercom

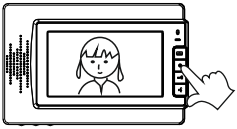

If two or more monitors are installed in the system:

to call a second monitor, press the intercom button ◉ .

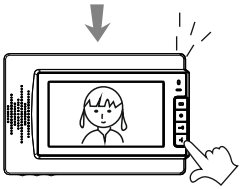

The call signal will ring on the second monitor (screen will remain blank):

a) to establish communication with the first monitor, press the button of call receiving .

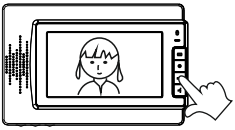

b) to end the call, press the button again .

European Council Directive 2002/96/EC on The Waste Electrical and Electronic Equipment Directive (WEEE Directive) imposes a ban on the disposal of old household electrical appliances as unsorted municipal waste. Old appliances must be collected separately and sorter in order to optimize recovery and recycling of certain components and materials. This allows reducing environmental pollution and has a positive impact on the human health. Crossed „trashcan" sign on the product reminds the client of his obligation of a special sorting. Consumers should contact with local authorities or retailer for information on dealing with used electric and electronic equipment.

Warranty card

1. The F&F Filipowski Sp. j. company provides warranty for purchased products for 24 months from the date of purchase placed on this Warranty Card proof of purchase.
2. Product defects revealed during the warranty period will be repaired free of charge within 21 days from the date of the product acceptance in a service point.
3. User has the right to replace the product for a new one if:
* four major repairs were made during the warranty period and the product is still defective;
* if the fault has been deemed impossible to remove. When the product is replaced for a new one, the equivalent of elements missing or damaged by the User (including packaging) and the cost of their replacement shall be deducted.
4. The user delivers the defective equipment at his own expense to the service point.
5. The warranty does not cover the decline in the quality of equipment due to normal wear and tear and the following cases:
* improper or inconsistent with the user manual use of the product;
* usage or leaving the product in unsuitable conditions (excessive humidity, too high or too low temperature, sunshine, etc.), different conditions for maintenance and operation than those that can be found in the operating manual of the product;
* mechanical, chemical, thermal damage;
* damage caused by external forces such as surges on the electricity network, lightning, flood, fire;
* damage caused by improper installation of equipment, improper storage of equipment or repairs performed by unauthorized persons;
* damage caused by improper power supply.
6. The warranty expires as a result of:
* breaking or damaging the warranty seals;
* connection of additional equipment, other than recommended by the manufacturer of the product;
* alterations and changes in product construction and repairs performed outside the service point of the F&F;
* the warranty card or serial numbers have been altered, blurred or obliterated;
7. Warranty Card is valid only with entered date of purchase, confirmed by the stamp and signature of the seller.
8. The repair condition is delivering the goods with this Warranty Card and proof of purchase.
9. Service point:

F&F Filipowski Sp. j.
Konstantynowska 79/81
95-200 Pabianice,
phone: (+48 42) 215 23 83;
(+48 42) 227 09 71
e-mail: handlowy@fif.com.pl
www.fif.com.pl

Product name:..... Type:.....

Data of sale:..... Stamp and signature of the seller:.....

Repairs registration

Date of repair	Scope of repair	Signature of techincian

Repairs registration continued

Date of repair	Scope of repair	Signature of technician

F&F Filipowski Sp. j.
Konstantynowska 79/81
95-200 Pabianice
phone: (+48 42) 215 23 83;
(+48 42) 227 09 71
e-mail: handlowy@fif.com.pl
www.fif.com.pl