datasheet for KLEPS 2600
article number: 972306100

SKS Kontakttechnik GmbH

product description:	order number: 972 306-100
description:	Safety clamp-type test probe with rotating grip jaws and flexible shaft. Wires and pins with up to a maximum diameter of 4mm can be clamped thanks to the special form of the grip jaws.4mm diameter brass socket connection.
typ:	KLEPS 2600 schwarz/black
system:	4mm safety system
order number:	972 306-100
clamping range:	4 mm
clamping typ:	rotating grip jaws
color	●
other color versions:	●●
technical data	
measurement category acc. to IEC 61010:	CAT III
type of termination:	4 mm socket (unsprung)
rated voltage:	AC/DC 1000 V
rated current: **Please consider derating curve!**	4 A
contact resistance:	10 mOhm
material	
contact material:	grip jaws: spring steel socket: brass
contact surface material:	grip jaws: tin
housing material:	PBT
environmental conditions:	
temperature range:	-25 °C to +80 °C
inflammable class:	
housing (basic material):	UL 94 HB
drawing	

Copyright ©2013 SKS Kontakttechnik GmbH / Neue Schichtstr. 14 / D-09366 Niederdorf (printed: Wed Aug 14 2013 10:48:17)

sales@prom-elec.com / ООО ПРОМЭЛЕКТРОНИКА

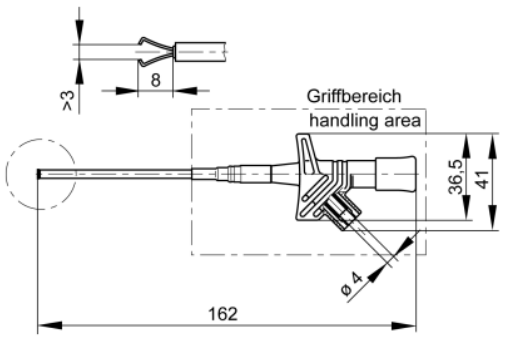

Copyright ©2013 SKS Kontakttechnik GmbH / Neue Schichtstr. 14 / D-09366 Niederdorf (printed: Wed Aug 14 2013 10:48:17)