Features

- 5050 top view SMD LED
- High Brightness
- AlInGaP / InGaN Technology
- Small package
- High reliability
- Clear Lens

Applications

- Consumer Electronics
- Light pipe application
- Automobile After Market
- Industrial Equipment

Description

The IN-P55TATRGB is a popular low profile RGB 5050 package with versatile design capabilities. It is a PLCC type LED which can be used in various applications.

Recommended Solder Pattern

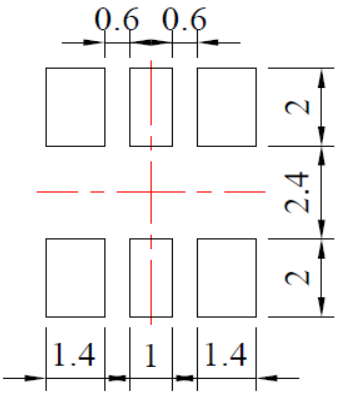

Figure 1. IN-P55TATRGB Solder Pattern

Package Dimensions in mm

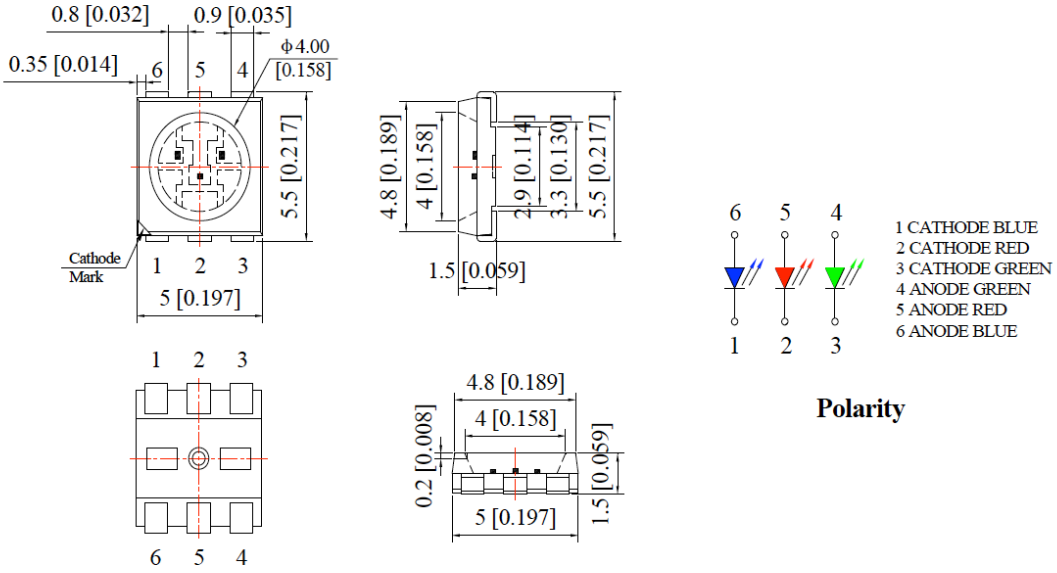

Figure 2. IN-P55TATRGB Package Dimensions

sales@prom-elec.com / ООО ПРОМЭЛЕКТРОНИКА

Absolute Maximum Rating at 25°C (Note 1)

Product	Emission Color	P_d (mW)	I_F (mA)	I_{FP}* (mA)	V_R (V)	T_{OP} (°C)	T_{ST} (°C)
IN-P55TATRGB	Red	60	25	100	5	-40°C~+80°C	-40°C~+85°C
IN-P55TATRGB	Green	95	25	100	5	-40°C~+80°C	-40°C~+85°C
IN-P55TATRGB	Blue	95	25	100	5	-40°C~+80°C	-40°C~+85°C

Notes

1. Condition for IFP is pulse of 1/10 duty and 0.1msec width

Electrical Characteristics T_A = 25℃ (Note 1)

Product	Emission Color	I_F(mA)	V_F(V)		λ(nm)			Viewing Angle	I^*_V(mcd)
			min	max	λ_D	λ_P	$\Delta\lambda$	$2\theta_{1/2}$	typ.
IN-P55TATRGB	Red	20	1.6	2.4	624	632	20	120	900
IN-P55TATRGB	Green	20	2.8	3.4	520	525	35	120	1800
IN-P55TATRGB	Blue	20	2.8	3.4	468	470	25	120	600

Notes

1. Performance guaranteed only under conditions listed in above tables.

ESD Precaution

ATTENTION: Electrostatic Discharge (ESD) protection

The symbol above denotes that ESD precaution is needed. ESD protection for GaP and AlGaAs based chips is necessary even though they are relatively safe in the presence of low static-electric discharge. Parts built with AlInGaP, GaN, or/and InGaN based chips are STATIC SENSITIVE devices. ESD precaution must be taken during design and assembly.
If manual work or processing is needed, please ensure the device is adequately protected from ESD during the process.

Please be advised that normal static precautions should be taken in the handling and assembly of this device to prevent damage or degradation which may be induced by electrostatic discharge (ESD).

Luminous Intensity (Iv) Bin:

Color	Bin Code	Spec. Range
Red	B1	600-700 mcd
	B2	700-800 mcd
	B3	800-900 mcd
	B4	900-1000 mcd
	B5	1000-1100 mcd
	B6	1100-1200 mcd
Green	E1	1500-1600 mcd
	E2	1600-1700 mcd
	E3	1700-1800 mcd
	E4	1800-1900 mcd
	E5	1900-2000 mcd
	E6	2000-2100 mcd
Blue	H1	300-400 mcd
	H2	400-500 mcd
	H3	500-600 mcd
	H4	600-700 mcd
	H5	700-800 mcd
	H6	800-900 mcd

@20mA / Ta=25° C, Tolerance: ± 10%

Dominant Wavelength (λD) Bin:

Color	Bin Code	Spec. Range
Red	A1	620-625 nm
	A2	625-630 nm
	A3	630-635 nm
Green	D1	520-525 nm
	D2	525-530 nm
	D3	530-535 nm
Blue	G1	460-465 nm
	G2	465-470 nm
	G3	470-475 nm

Forward Voltage (Vf) Bin:

Color	Bin Code	Spec. Range
Red	C0	1.80-2.00 V
	C1	2.00-2.20 V
	C2	2.20-2.40 V
Green	F1	2.80-3.00 V
	F2	3.00-3.20 V
	F3	3.20-3.40 V
Blue	V1	2.80-3.00 V
	V2	3.00-3.20 V
	V3	3.20-3.40 V

Typical Characteristic Curves-Red

Spectrum Distribution

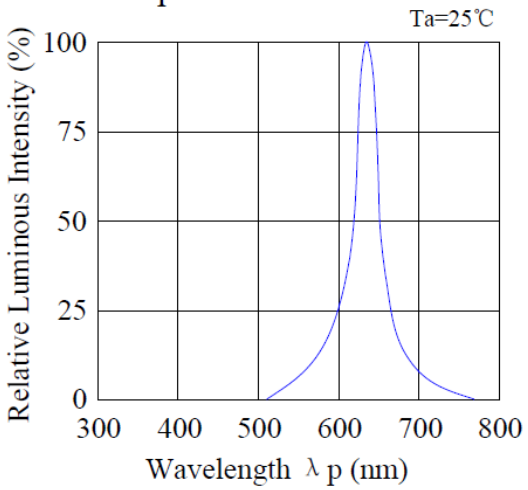

Forward Current & Forward Voltage

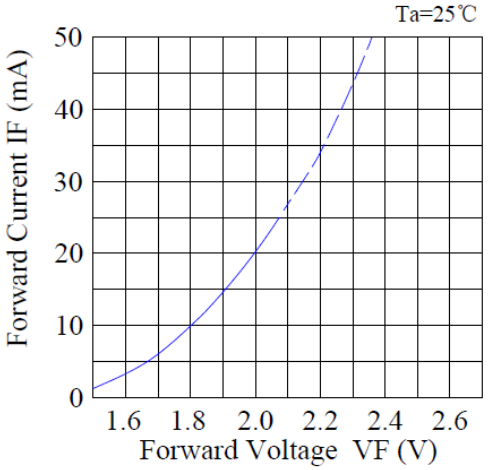

Forward Current Derating Curve

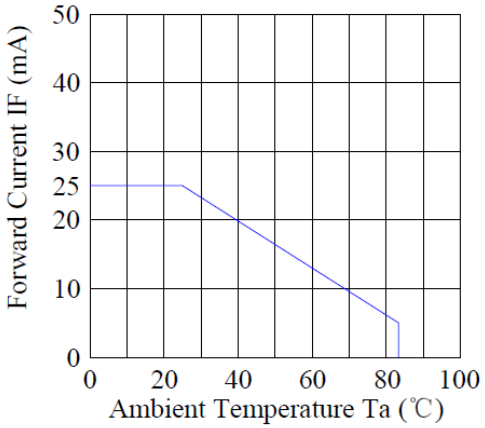

Luminous Intensity & Forward Current

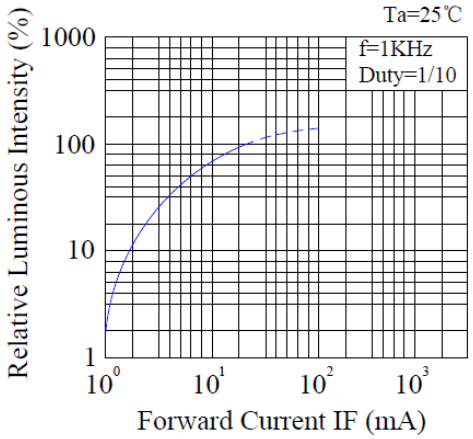

Luminous Intensity & Ambient Temperature

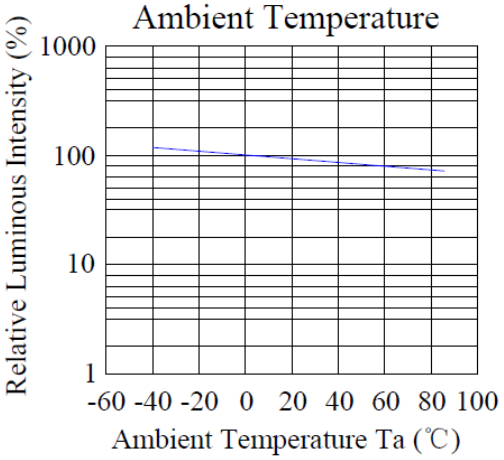

Radiation Diagram

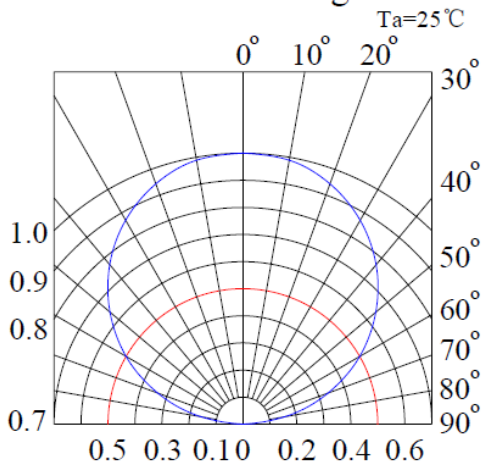

Typical Characteristic Curves-Green

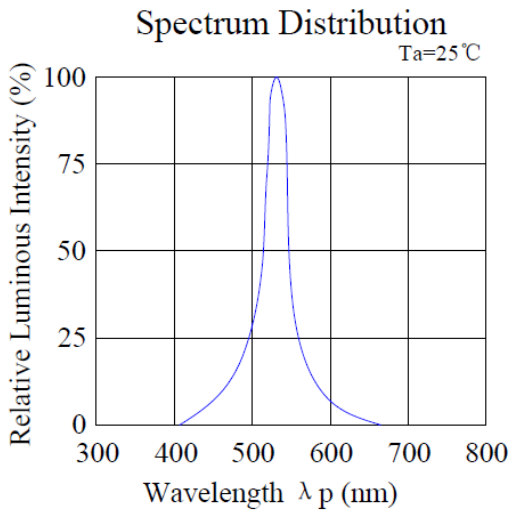

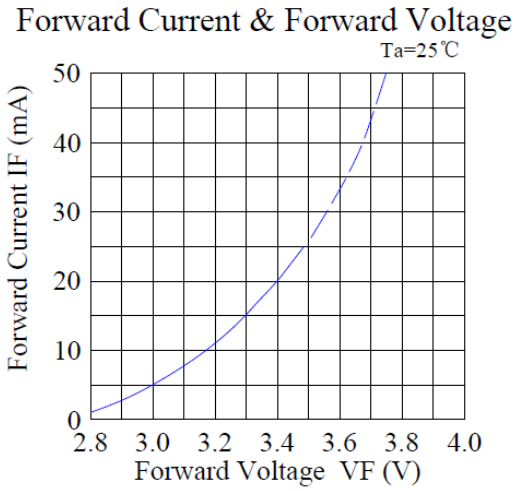

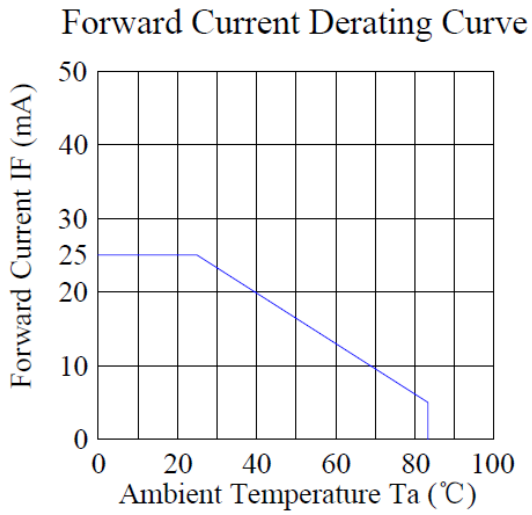

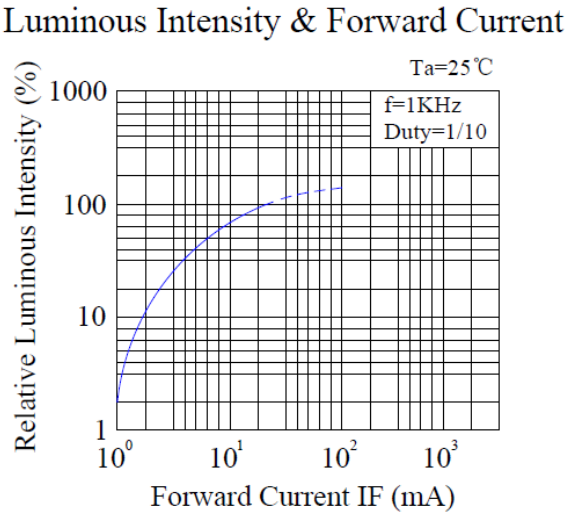

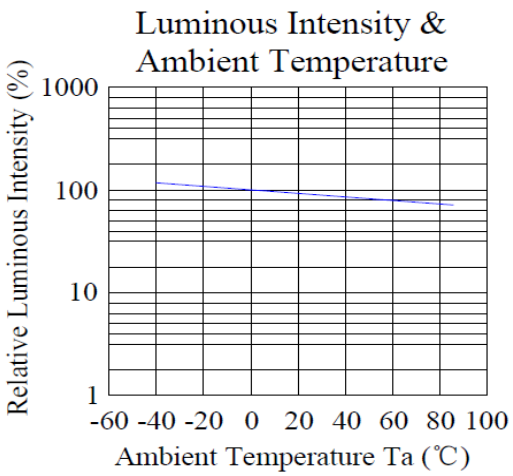

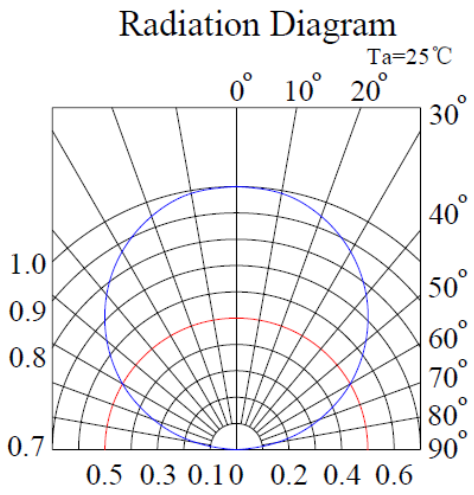

Typical Characteristic Curves-Blue

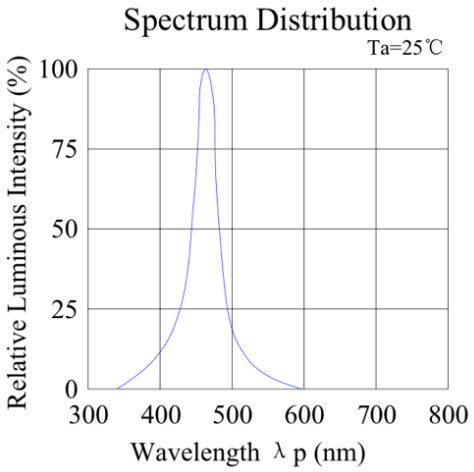

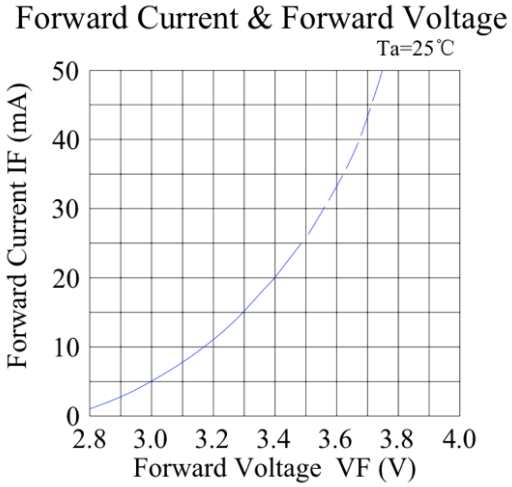

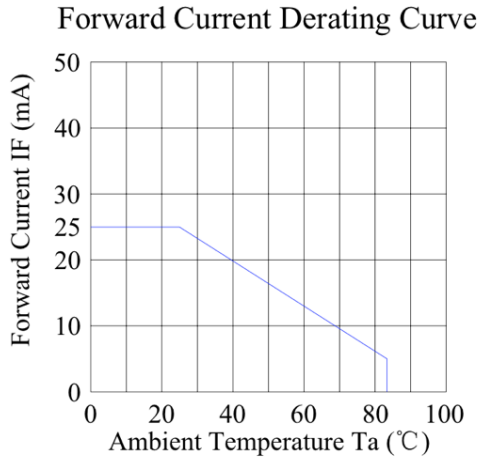

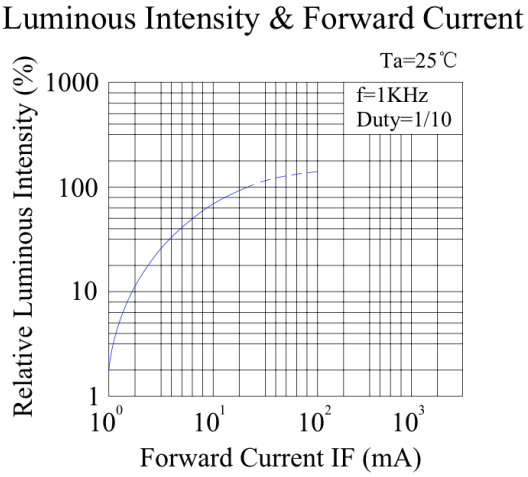

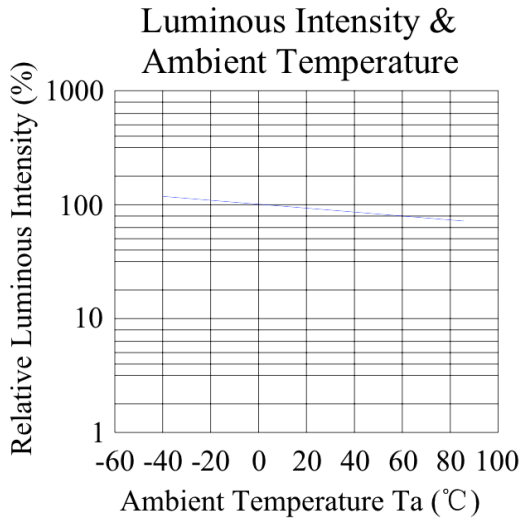

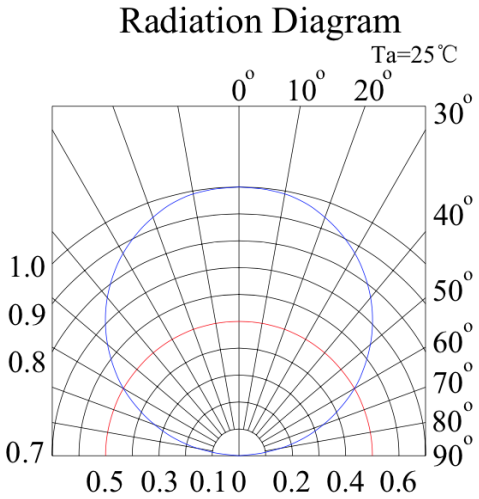

Ordering Information

Product	Emission Color	Technology	Test Current I_F (mA)	Luminous Intensity I_V (mcd) (Typ.)	Forward Voltage V_F (V) (Typ.)	Orderable Part Number
IN-P55TATRGB	Red	AlInGaP	20	900	2.0	IN-P55TATRGB
	Green	InGaN	20	1800	3.2	
	Blue	InGaN	20	600	3.2	

- Bin Range specified on page 3.

Label Specifications

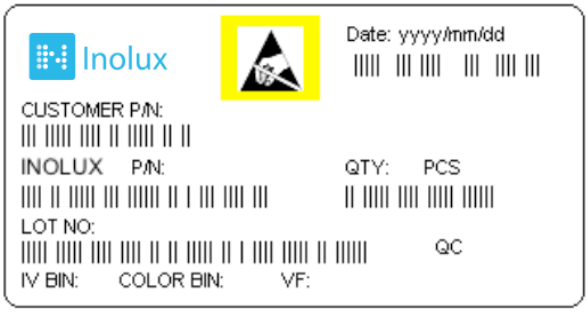

Inolux P/N:

I	N	-	P	5	5	TA	T			R	G	B	-	X	X	X	X
Inolux SMD			Material	Package		Variation	Orientation	Current	Lens	Color				Customized Stamp-off			
			P = PLCC Type	55TA = 5.0 x 5.5 x 1.5 mm			T = Top Mount	(Blank) = 20mA per Chip	(Blank) = Clear	R=632nm G=520nm B=470nm							

Lot No.:

Z	2	0	1	7	01	24	001
Internal Tracker	Year (2017, 2018, ...)				Month	Date	Serial

Packaging Information: 1000pcs Per Reel

Tape Dimension

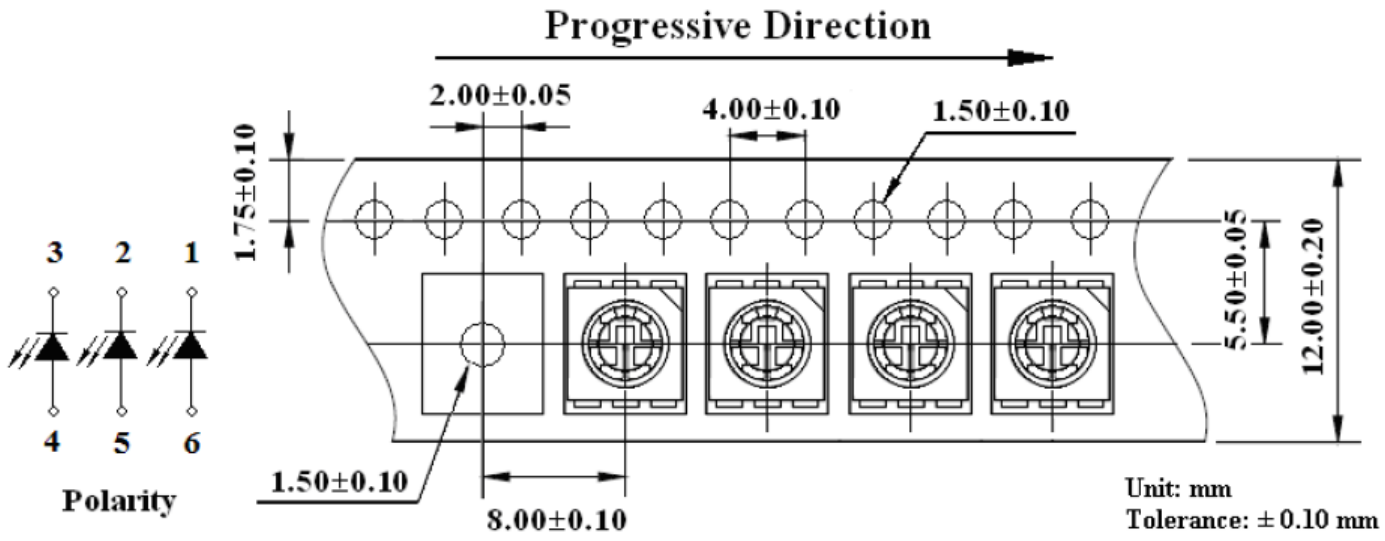

Reel Dimension

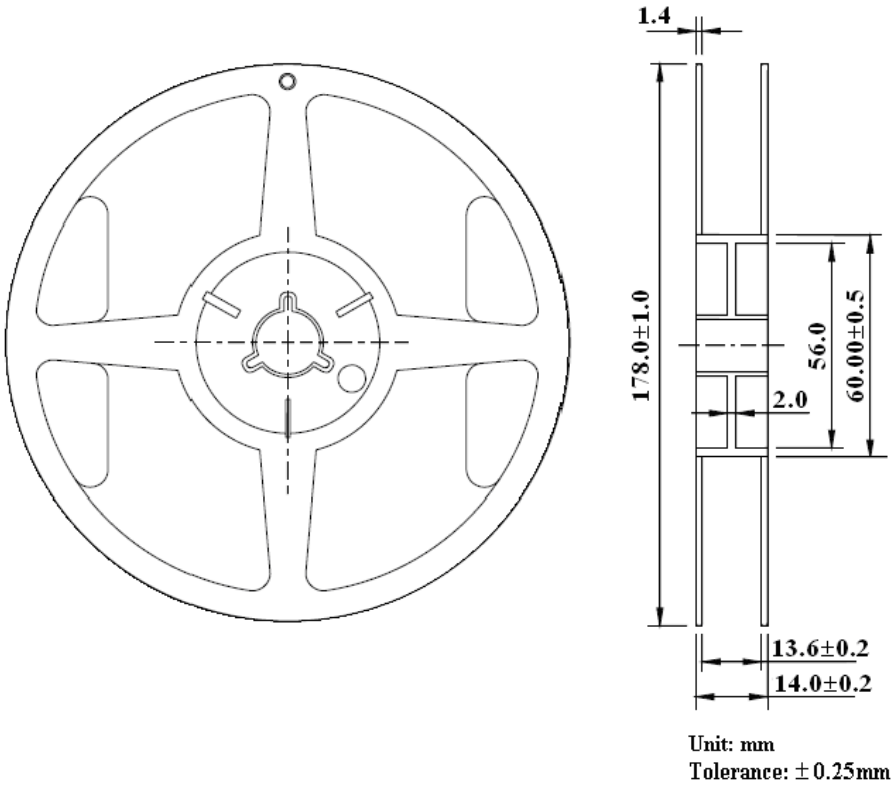

Packing Dimension

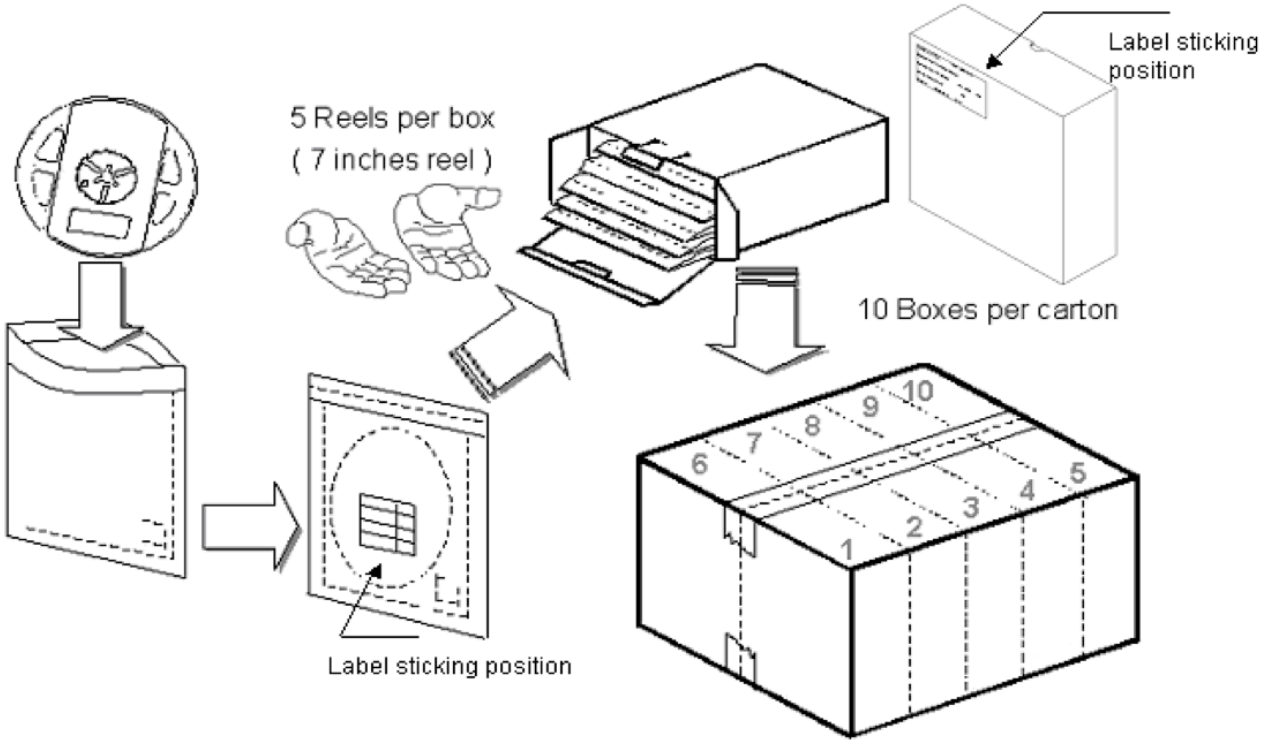

5 boxes per carton are available depending on shipment quantity.

	Specification	Material	Quantity
Carrier tape	Per EIA 481-1A specs	Conductive black tape	1000pcs per reel
Reel	Per EIA 481-1A specs	Conductive black	
Label	IN standard	Paper	
Packing bag	220x240mm	Aluminum laminated bag/ no-zipper	One reel per bag
Carton	IN standard	Paper	Non-specified
Others: Each immediate box consists of 5 reels. The 5 reels may not necessarily have the same lot number or the same bin combinations of Iv, λ_D and Vf. Each reel has a label identifying its specification; the immediate box consists of a product label as well.			

Dry Pack

All SMD optical devices are **MOISTURE SENSITIVE**. Avoid exposure to moisture at all times during transportation or storage. Every reel is packaged in a moisture protected anti-static bag. Each bag is properly sealed prior to shipment.

Upon request, a humidity indicator will be included in the moisture protected anti-static bag prior to shipment.

The packaging sequence is as follows:

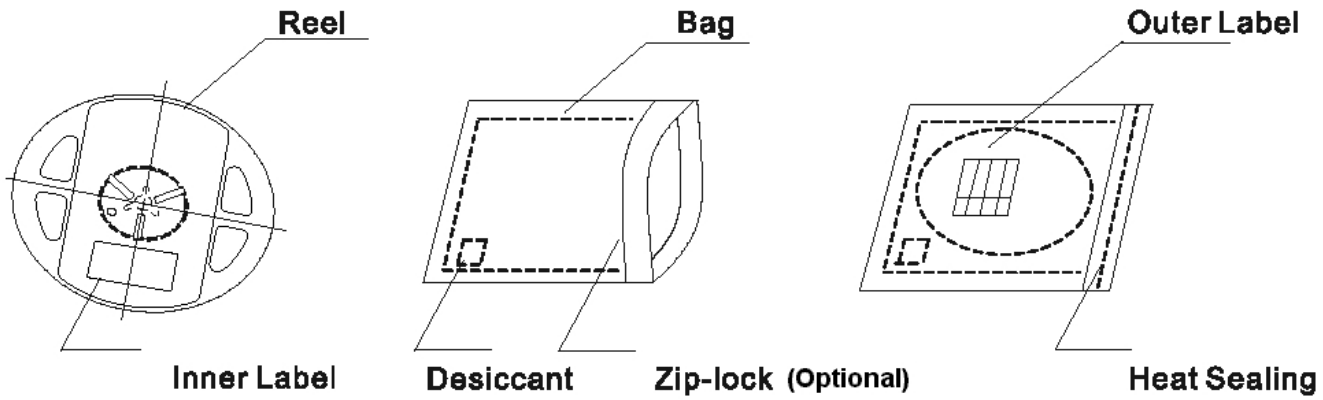

Reflow Soldering

- Recommended tin glue specifications: melting temperature in the range of 178~192 ^{O}C
- The recommended reflow soldering profile is as follows (temperatures indicated are as measured on the surface of the LED resin):

Lead-free Solder Profile

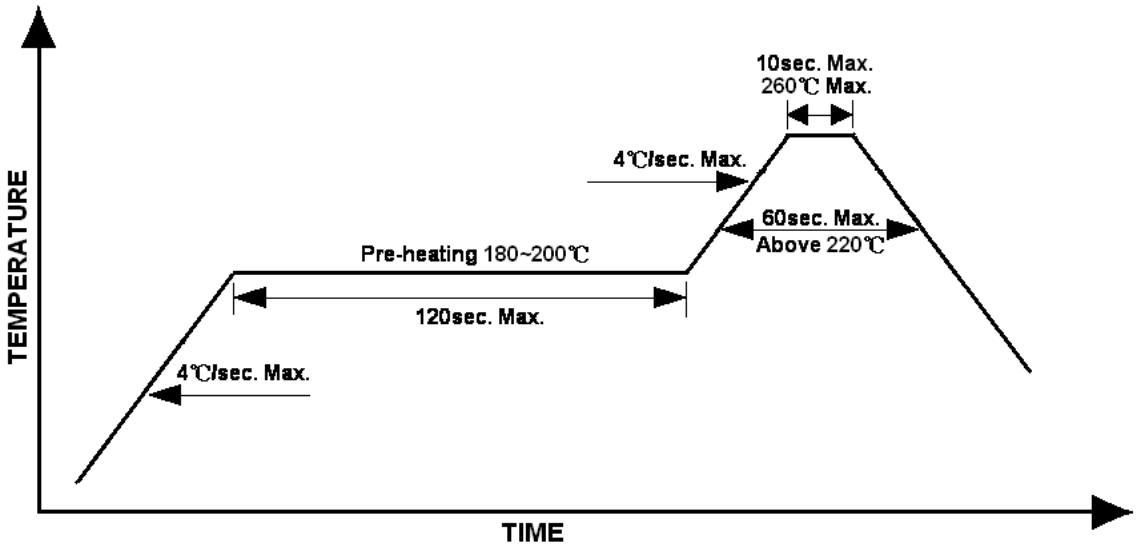

Precautions

- Avoid exposure to moisture at all times during transportation or storage.
- Anti-Static precaution must be taken when handling GaN, InGaN, and AlInGaP products.
- It is suggested to connect the unit with a current limiting resistor of the proper size. Avoid applying a reverse voltage.
- Avoid operation beyond the limits as specified by the absolute maximum ratings.
- Avoid direct contact with the surface through which the LED emits light.
- If possible, assemble the unit in a clean room or dust-free environment.

Reworking

- Rework should be completed within 5 seconds under 260 ^{O}C.
- The iron tip must not come in contact with the copper foil.
- Twin-head type is preferred.

Cleaning

Following are cleaning procedures after soldering:

- An alcohol-based solvent such as isopropyl alcohol (IPA) is recommended.
- Temperature x Time should be 50°C x 30sec. or <30°C x 3min
- Ultra sonic cleaning: < 15W/ bath; bath volume ≤ 1liter
- Curing: 100 ^{O}C max, <3min

Cautions of Pick and Place

- Avoid stress on the resin at elevated temperature.
- Avoid rubbing or scraping the resin by any object.
- Electro-static may cause damage to the component. Please ensure that the equipment is properly grounded. Use of an ionizer fan is recommended.

Reliability

Item	Frequency/ lots/ samples/ failures	Standards Reference	Conditions
Precondition	For all reliability monitoring tests according to JEDEC Level 2	J-STD-020	1.) Baking at 85°C for 24hrs 2.) Moisture storage at 85°C/ 60% R.H. for 168hrs
Solderability	1Q/ 1/ 22/ 0	JESD22-B102-B And CNS-5068	Accelerated aging 155°C/ 24hrs Tinning speed: 2.5+0.5cm/s Tinning: A: 215°C/ 3+1s or B: 260°C/ 10+1s
Resistance to soldering heat		CNS-5067	Dipping soldering terminal only Soldering bath temperature A: 260+/-5°C; 10+/-1s B: 350+/-10°C; 3+/-0.5s
Operating life test	1Q/ 1/ 40/ 0	CNS-11829	1.) Precondition: 85°C baking for 24hrs 85°C/ 60%R.H. for 168hrs 2.) Tamb25°C; IF=20mA; duration 1000hrs
High humidity, high temperature bias	1Q/ 1/ 45/ 0	JESD-A101-B	Tamb: 85°C Humidity: 85% R.H., IF=5mA Duration: 1000hrs
High temperature bias	1Q/ 1/ 20	IN specs.	Tamb: 55°C IF=20mA Duration: 1000hrs
Pulse life test	1Q/ 1/ 40/ 0		Tamb25°C, If=20mA,, Ip=100mA, Duty cycle=0.125 (tp=125 μ s,T=1sec) Duration 500hrs)
Temperature cycle	1Q/ 1/ 76/ 0	JESD-A104-A IEC 68-2-14, Nb	A cycle: -40 degree C 15min; +85 degree C 15min Thermal steady within 5 min.. 300 cycles 2 chamber/ Air-to-air type
High humidity storage test	1Q/ 1/ 40/ 0	CNS-6117	60+3°C 90+5/-10% R.H. for 500hrs
High temperature storage test	1Q/ 1/ 40/ 0	CNS-554	100+10°C for 500hrs
Low temperature storage test	1Q/ 1/ 40/ 0	CNS-6118	-40+5°C for 500hrs

Revision History

Changes since last revision	Page	Version No.	Revision Date
Initial Release		1.0	04-26-2017

DISCLAIMER

INOLUX reserves the right to make changes without further notice to any products herein to improve reliability, function or design. INOLUX does not assume any liability arising out of the application or use of any product or circuit described herein; neither does it convey any license under its patent rights, nor the rights of others.

LIFE SUPPORT POLICY

INOLUX's products are not authorized for use as critical components in life support devices or systems without the express written approval of the President of INOLUX or INOLUX CORPORATION. As used herein:
1. Life support devices or systems are devices or systems which, (a) are intended for surgical implant into the body, or (b) support or sustain life, and (c) whose failure to perform when properly used in accordance with instructions for use provided in the labeling, can be reasonably expected to result in a significant injury of the user.
2. A critical component in any component of a life support device or system whose failure to perform can be reasonably expected to cause the failure of the life support device or system, or to affect its safety or effectiveness.