Clifford & Snell®

Yodalight®
YL50 Hi-Vis

Multi-purpose Audible & Visual Signalling Device designed for use in Fire, Commercial, Industrial & Marine applications

PRODUCT FEATURES

- Max sound output 112 dB(A) @ 1m
- IP66 rated as standard
- High Brightness LED Beacon
- 32 selectable tones meeting international regulations
- Flame retardant ABS enclosure
- Stainless steel fixings
- 2 stage alarm
- Independently selectable second stage option
- Lens available in eight colours
- Low current consumption

Product Approvals

Marine Equipment Directive MED
Regulations EN 54-3:2014 incl. A1:2019
IEC 60092-504:2016 IEC 60533:2015
Module B (BSI/MED/3.53/756093)
Module D (BSI/MED/PC/756095)

UKCA
BS EN 54-3 : 2001 + A1:2002 + A2:2006
Type B
0086-CPR-774029

Merchant Shipping (Marine Equipment)
Regulations EN 54-3:2014 incl. A1:2019,
IEC 60092-504:2016, IEC 60533:2015
Module B (BSI/UK/3.53/738807)
Module D (BSI/UK/PC/738808)

BS EN 54-3 : 2001 + A1:2002 + A2:2006
Type B
KM 713890

CE
EN 54-3 : 2001 + A1:2002 + A2:2006
Type B
2797-CPR-713892

Compliant

UK +44 (0) 121 446 5322 FR +33 (0) 170 721 271 uksales@moflash.co.uk exportsales@moflash.co.uk KM-europ@moflash.com
www.moflash.com

Issue 4

sales@prom-elec.com / ООО ПРОМЭЛЕКТРОНИКА

TECHNICAL DATA

Electrical Data	
Operating Voltage	Current Draw
24vDC ---	75mA at Tone 1
48vDC ---	116 mA
115vAC ~	65 mA
230vAC ~	55 mA

Mechanical Data	
Enclosure Material	ABS FR UL94 5VB
Lens Material	PC FR UV Stable UL94 HB
External Fixings	Stainless Steel
Degree of Protection	IP66 (IEC60529)

Ambient Conditions	
Operating Temperatures	
Standard General	-35 °C to +70 °C
EN54 Pt:3 Fire	-25 °C to +55 °C
Storage Temperature	-40 °C to +70 °C
Max. Relative Humidity	93% ± 3 at 40 °C

Acoustic Data	
Maximum Volume Output	112dB (A)
Volume Control Adjustment	-18 dB (A)
2 Stage Alarm with predetermined second stage as standard.	
Selectable second stage option available (DC units only) (2)	

Luminous Characteristics		
Array Type	24vDC --- (*)	12 High Brightness LEDs
	48vDC --- (**)	25 High Brightness LEDs
	115vAC ~ (**)	25 High Brightness LEDs
	230vAC ~ (**)	25 High Brightness LEDs
Flash Rate	(*) 60 FPM, (**) 60/120 FPM User selectable	

Mounting / Installation

Devices should be mounted to a suitable flat wall or bulkhead avoiding any undue vibration and using the two lugs projecting from the case. The lugs are bored 8mm on 153mm centres. The minimum length of fixing screw required is 25mm. To maintain the IP rating of the enclosure, the cable entries must be fitted with a suitably rated cable gland (included). Max cable termination 2.5mm ².

Line integrity on 24vDC systems

- For 3 wire 2 stage alarm system, monitor via reverse polarity.
- For 2 wire 2 stage alarm system, monitor via threshold, (applied voltage<1v) an end-of-line (E.O.L) resistor is required for line monitoring and should have a minimum resistance of 3k3 Ohms and 0.5 Watts, wire-wound or metal film type.

Standard Alarm Stage Options

Standard units offer a 2 stage alarm system with a predetermined second stage (see Tone Table on the Installation Sheet for details). A selectable second stage option is available for DC units only with the (2) prefix code in the selection table on page 3.

Additional Stage Alarm Options

Units with up to 8 independently selectable stages are available in a range of input voltages. However, these units do not carry any 3rd party approvals. Contact our technical department for further information.

Dimensional Drawing

We reserve the right to make alterations to the technical data, dimensions, weights, designs and products available without notice. The illustrations cannot be considered binding. All Dimensions in mm [inches] - Subject to alterations

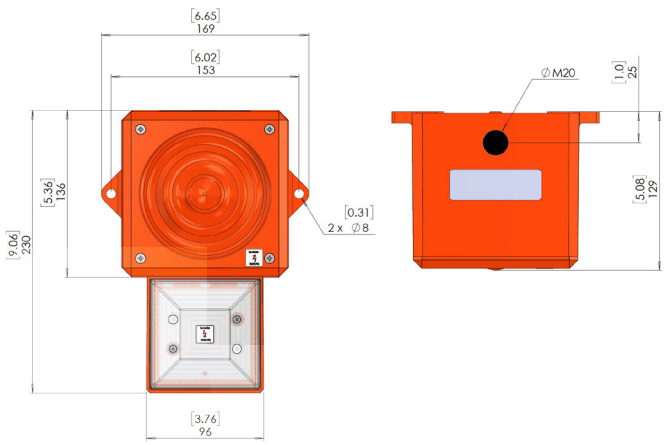

SELECTION

Version	Enclosure Colour	Rated Operational Voltage	Lens Colour	Effective Candela (cd)	Order Number	Art. No.	Weight (kg)
YL50 Hi-Vis Sounder/LED combination BS EN 54 Pt:3 UKCA, CE, EU MED & UK MER	Red Flame (RF) RAL 2002	24vDC ---	Amber	9.22	YL50/DL/A/RF/HV/WR	245280	1.1
			Red	8.98	YL50/DL/R/RF/HV/WR	245281	1.1
			Green	27.52	YL50/DL/G/RF/HV/WR	245282	1.1
			Opal	10.87	YL50/DL/O/RF/HV/WR	245283	1.1
			Blue	8.18	YL50/DL/B/RF/HV/WR	245284	1.1
			Clear	29.21	YL50/DL/C/RF/HV/WR	245285	1.1
			Yellow	26.79	YL50/DL/Y/RF/HV/WR	245286	1.1
			Magenta	6.6	YL50/DL/M/RF/HV/WR	245287	1.1
		24vDC --- Independently Selectable 2nd Stage Version	Amber	9.22	YL50/DL/A/RF/HV/WR(2)	245312	1.1
			Red	8.98	YL50/DL/R/RF/HV/WR(2)	245313	1.1
			Green	27.52	YL50/DL/G/RF/HV/WR(2)	245314	1.1
			Opal	10.87	YL50/DL/O/RF/HV/WR(2)	245315	1.1
			Blue	8.18	YL50/DL/B/RF/HV/WR(2)	245316	1.1
			Clear	29.21	YL50/DL/C/RF/HV/WR(2)	245317	1.1
			Yellow	26.79	YL50/DL/Y/RF/HV/WR(2)	245318	1.1
			Magenta	6.6	YL50/DL/M/RF/HV/WR(2)	245319	1.1
		48vDC ---	Amber	62.31	YL50/FL/A/RF/HV/WR	245288	1.1
			Red	55.12	YL50/FL/R/RF/HV/WR	245289	1.1
			Green	69.23	YL50/FL/G/RF/HV/WR	245290	1.1
			Opal	33	YL50/FL/O/RF/HV/WR	245291	1.1
			Blue	10.27	YL50/FL/B/RF/HV/WR	245292	1.1
			Clear	78.97	YL50/FL/C/RF/HV/WR	245293	1.1
			Yellow	66.83	YL50/FL/Y/RF/HV/WR	245294	1.1
			Magenta	19.12	YL50/FL/M/RF/HV/WR	245295	1.1
		115vAC ~	Amber	62.31	YL50/LL/A/RF/HV/WR	245296	1.18
			Red	55.12	YL50/LL/R/RF/HV/WR	245297	1.18
			Green	69.23	YL50/LL/G/RF/HV/WR	245298	1.18
			Opal	33	YL50/LL/O/RF/HV/WR	245299	1.18
			Blue	10.27	YL50/LL/B/RF/HV/WR	245300	1.18
			Clear	78.97	YL50/LL/C/RF/HV/WR	245301	1.18
			Yellow	66.83	YL50/LL/Y/RF/HV/WR	245302	1.18
			Magenta	19.12	YL50/LL/M/RF/HV/WR	245303	1.18
		230vAC ~	Amber	62.31	YL50/NL/A/RF/HV/WR	245304	1.18
			Red	55.12	YL50/NL/R/RF/HV/WR	245305	1.18
			Green	69.23	YL50/NL/G/RF/HV/WR	245306	1.18
			Opal	33	YL50/NL/O/RF/HV/WR	245307	1.18
			Blue	10.27	YL50/NL/B/RF/HV/WR	245308	1.18
			Clear	78.97	YL50/NL/C/RF/HV/WR	245309	1.18
			Yellow	66.83	YL50/NL/Y/RF/HV/WR	245310	1.18
			Magenta	19.12	YL50/NL/M/RF/HV/WR	245311	1.18