TSB571, TSB572

Datasheet

Low-power, 2.5 MHz, RR IO, 36 V BiCMOS operational amplifier

TSB571

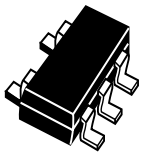

SOT23-5

TSB572

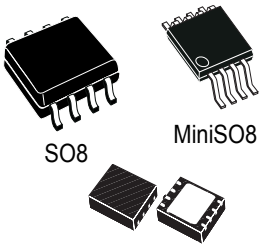

SO8 MiniSO8

DFN8 (3x3 mm)

Maturity status link
TSB571, TSB572

Related products	
TSB611	For below 100 µA solution
TSB711	For a higher precision
TSB712	

Features

- Low-power consumption: 380 µA typ.
- Wide supply voltage: 4 V - 36 V
- Rail-to-rail input and output
- Gain bandwidth product: 2.5 MHz
- Low input bias current: 30 nA max.
- No phase reversal
- High tolerance to ESD: 4 kV HBM
- Extended temperature range: -40 °C to 125 °C
- Automotive grade
- Small SMD packages
- 40 V BiCMOS technology
- Enhanced stability vs. capacitive load

Applications

- Active filtering
- Audio systems
- Automotive
- Power supplies
- Industrial
- Low/high side current sensing

Description

The TSB571 (single) and TSB572 (dual) operational amplifiers offer an extended voltage operating range from 4 V to 36 V and rail-to-rail input/output.

The TSB571 and TSB572 give a very good speed/power consumption ratio with a 2.5 MHz gain bandwidth product and a consumption of 380 µA typically only at 36 V supply voltage.

Stability and robustness of these devices make them an ideal solution for a wide voltage range of applications.

sales@prom-elec.com / ООО ПРОМЭЛЕКТРОНИКА

1 Package pin connections

Figure 1. Pin connections (top view)

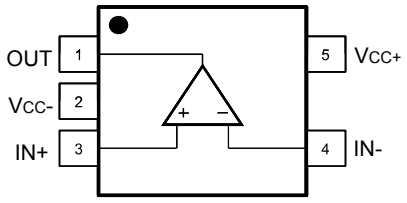

SOT23-5

Table 1. Pin description (SOT23-5)

Pin n°	Pin name	Description
1	OUT	Output channel
2	V_{CC-}	Negative supply voltage
3	IN1+	Non-inverting input channel
4	IN-	Inverting input channel
5	V_{CC+}	Positive supply voltage

Figure 2. Pin connections for each package (top view)

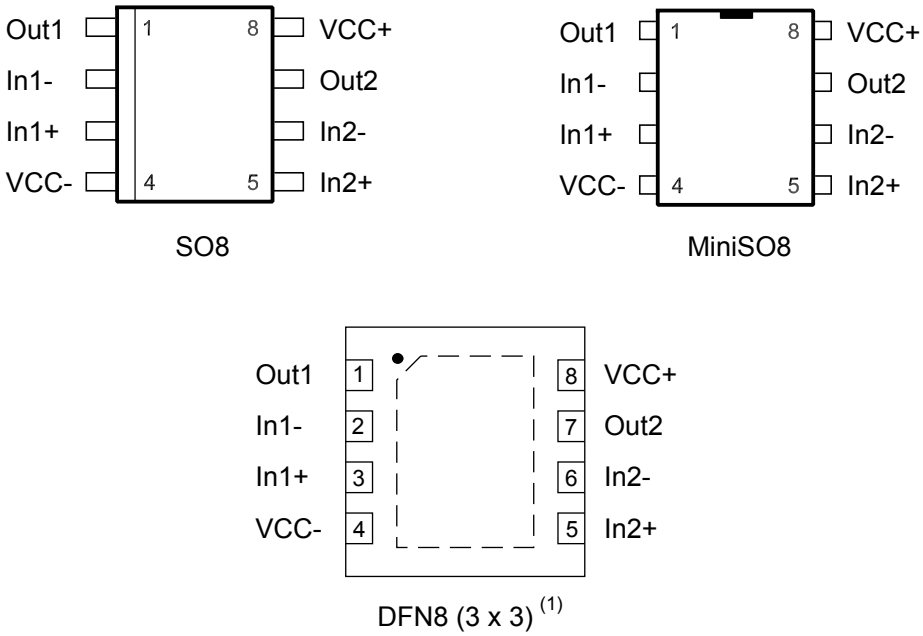

1. Exposed pad can be left floating or connected to ground.

Table 2. Pin description (miniSO8/SO8/DFN8)

Pin	Pin name	Description
1	OUT1	Output channel 1
2	IN1-	Inverting input channel 1
3	IN1+	Non-inverting input channel 1
4	V_{CC-}	Negative supply voltage
5	IN2+	Non-inverting input channel 2
6	IN2-	Inverting input channel 2
7	OUT2	Output channel 2
8	V_{CC+}	Positive supply voltage

2 Absolute maximum ratings and operating conditions

Table 3. Absolute maximum ratings

Symbol	Parameter		Value	Unit
V_{CC}	Supply voltage [1]		40	V
V_{id}	Differential input voltage [2]		±1	
V_{in}	Input voltage [3]		(V_{CC}^{-}) - 0.2 to (V_{CC}^{+}) + 0.2	
I_{in}	Input current [4]		10	mA
T_{stg}	Storage temperature		-65 to 150	°C
T_j	Maximum junction temperature		150	
R_{thja}	Thermal resistance junction to ambient [5] [6]	SOT23-5	250	°C/W
		MiniSO8	190	
		DFN8 3x3	40	
		SO-8	125	
ESD	Human body model (HBM) [7]		4	kV
	Machine model (MM) [8]		100	V
	CDM: charged device model [9]		1.5	kV

1. *All voltage values, except the differential voltage are with respect to network ground terminal.*
2. *Differential voltages are the non-inverting input terminal with respect to the inverting input terminal.*
3. *V_{CC}-V_{in} must not exceed 40 V, Vin must not exceed 40 V.*
4. *Input current must be limited by a resistor in-series with the inputs.*
5. *R_{th} are typical values.*
6. *Short-circuits can cause excessive heating and destructive dissipation.*
7. *According to JEDEC standard JESD22-A114F.*
8. *According to JEDEC standard JESD22-A115A.*
9. *According to ANSI/ESD STM5.3.1.*

Table 4. Operating conditions

Symbol	Parameter	Value	Unit
V_{CC}	Supply voltage	4 to 36	V
V_{icm}	Common mode input voltage range	(V_{CC}^{-}) - 0.1 to (V_{CC}^{+}) + 0.1	
T_{oper}	Operating free-air temperature range	-40 to 125	°C

3 Electrical characteristics

Table 5. Electrical characteristics at V_{cc} = 4 V, V_{icm} = V_{cc}/2, T_{amb} = 25 °C, and R_L connected to V_{cc}/2 (unless otherwise specified)

Symbol	Parameter	Conditions	Min.	Typ.	Max.	Unit
DC performance						
V_{io}	Input offset voltage		-1.5	-0.2	1.5	mV
		-40 °C < T < 125 °C	-2.1		2.1	
$\Delta V_{io}/\Delta T$	Input offset voltage drift	-40 °C < T < 125 °C		1.5	6	µV/°C
I_{io}	Input offset current			2	15	nA
		-40 °C < T < 125 °C			35	
I_{ib}	Input bias current			8	30	
		-40 °C < T < 125 °C			70	
C_{IN}	Input capacitor			2		pF
R_{IN}	Input impedance			1		TΩ
CMR	Common mode rejection ratio 20 log ($\Delta V_{icm}/\Delta V_{io}$)	V_{icm} = (V_{CC-}) to (V_{CC+}) - 1.5 V, V_{out} = V_{CC}/2	90	114		dB
		-40 °C < T < 125 °C	80			
		V_{icm} = (V_{CC-}) to (V_{CC+}), V_{out} = V_{CC}/2	75	97		
		-40 °C < T < 125 °C	70			
A_{vd}	Large signal voltage gain	R_L= 10 kΩ, V_{out} = 0.5 to 3.5 V	90	100		
		-40 °C < T < 125 °C	85			
V_{OH}	High level output voltage (drop voltage from (V_{CC+}))	R_L = 10 kΩ		19	60	mV
		-40 °C < T < 125 °C			80	
V_{OL}	Low level output voltage	R_L = 10 kΩ		12	50	
		-40 °C < T < 125 °C			70	
I_{out}	I_{sink}	V_{out} = V_{CC}	20	38		mA
		-40 °C < T < 125 °C	5			
	I_{source}	V_{out} = 0 V	10	32		
		-40 °C < T < 125 °C	5			
I_{CC}	Supply current (per channel)	No load, V_{out} = V_{CC}/2		340	430	µA
		-40 °C < T < 125 °C			500	
AC performance						
GBP	Gain bandwidth product	R_L = 10 kΩ, C_L = 100 pF	1.5	2.2		MHz
		-40 °C < T < 125 °C	1.2			
ϕ_m	Phase margin	R_L = 10 kΩ, C_L = 100 pF		45		degrees
G_m	Gain margin	R_L = 10 kΩ, C_L = 100 pF		5		dB
SR	Negative slew rate	V_{in} = 3.5 to 0.5 V, A_v = 1, 10 % to 90 %, R_L = 10 kΩ, C_L= 100 pF	0.50	0.78		V/µs
		-40 °C < T < 125 °C	0.37			
	Positive slew rate	V_{in} = 0.5 to 3.5 V, A_v = 1, 10% to 90%, R_L = 10 kΩ, C_L= 100 pF	0.50	0.89		
		-40 °C < T < 125 °C	0.37			

Symbol	Parameter	Conditions	Min.	Typ.	Max.	Unit
e_n	Equivalent input noise voltage	f = 1 kHz		20		nV/√Hz
		f = 0.1 Hz to 10 Hz		0.7		µVpp
THD+N	Total harmonic distortion + noise	f = 1 kHz, V_{in} = 3.8 V_{pp}, R_L = 10 kΩ, C_L=100 pF		0.001		%

Table 6. Electrical characteristics at V_{cc} = 12 V, V_{icm} = V_{cc}/2, T_{amb} = 25 °C, and R_L connected to V_{cc}/2 (unless otherwise specified)

Symbol	Parameter	Conditions	Min.	Typ.	Max.	Unit
DC performance						
V_{io}	Input offset voltage		-1.5	-0.1	1.5	mV
		-40 °C < T < 125 °C	-2.1		2.1	
$\Delta V_{io}/\Delta T$	Input offset voltage drift	-40 °C < T < 125 °C		1.5	6	µV/°C
I_{io}	Input offset current			2	15	nA
		-40 °C < T < 125 °C			35	
I_{ib}	Input bias current			8	30	
		-40 °C < T < 125 °C			70	
C_{IN}	Input capacitor			2		pF
R_{IN}	Input impedance			1		TΩ
CMR	Common mode rejection ratio 20 log ($\Delta V_{icm}/\Delta V_{io}$)	V_{icm} = (V_{CC-}) to (V_{CC+}) - 1.5 V, V_{out} = V_{CC}/2	100	123		dB
		-40 °C < T < 125 °C	90			
		V_{icm} = (V_{CC-}) to (V_{CC+}), V_{out} = V_{CC}/2	85	106		
		-40 °C < T < 125 °C	80			
SVR	Supply voltage rejection ratio 20 log ($\Delta V_{CC}/\Delta V_{io}$)	V_{CC} = 4 to 12 V	90	99		
		-40 °C < T < 125 °C	80			
A_{vd}	Large signal voltage gain	R_L= 10 kΩ, V_{out} = 0.5 to 11.5 V	95	106		
		-40 °C < T < 125 °C	90			
V_{OH}	High level output voltage (drop voltage from V_{CC+})	R_L = 10 kΩ		38	100	mV
		-40 °C < T < 125 °C			150	
V_{OL}	Low level output voltage	R_L = 10 kΩ		16	70	
		-40 °C < T < 125 °C			90	
I_{out}	I_{sink}	V_{out} = V_{CC}	20	42		mA
		-40 °C < T < 125 °C	8			
	I_{source}	V_{out} = 0 V	15	35		
		-40 °C < T < 125 °C	7			
I_{CC}	Supply current (per channel)	No load, V_{out} = V_{CC}/2		360	450	µA
		-40 °C < T < 125 °C			530	
AC performance						
GBP	Gain bandwidth product	R_L = 10 kΩ, C_L = 100 pF	1.6	2.4		MHz
		-40 °C < T < 125 °C	1.3			
ϕ_m	Phase margin	R_L = 10 kΩ, C_L = 100 pF		50		degrees
G_m	Gain margin	R_L = 10 kΩ, C_L = 100 pF		6		dB
SR	Negative slew rate	V_{in} = 10.5 to 1.5 V, A_v = 1, 10 % to 90 %, R_L = 10 kΩ, C_L = 100 pF	0.53	0.82		V/µs
		-40 °C < T < 125 °C	0.40			
	Positive slew rate	V_{in} = 1.5 to 10.5 V, A_v = 1, 10 % to 90 %, R_L = 10 kΩ, C_L = 100 pF	0.55	0.92		
		-40 °C < T < 125 °C	0.40			

Symbol	Parameter	Conditions	Min.	Typ.	Max.	Unit
e_n	Equivalent input noise voltage	f = 1 kHz		20		nV/√Hz
		f = 0.1 Hz to 10 Hz		0.7		µVpp
THD+N	Total harmonic distortion + noise	f = 1 kHz, V_{in} = 7 V_{pp}, R_L = 10 kΩ, C_L= 100 pF		0.000 5		%

Table 7. Electrical characteristics at V_{cc} = 36 V, V_{icm} = V_{cc}/2, T_{amb} = 25 °C, and R_L connected to V_{cc}/2 (unless otherwise specified)

Symbol	Parameter	Conditions	Min.	Typ.	Max.	Unit
DC performance						
V_{io}	Input offset voltage		-1.5	0.1	1.5	mV
		-40 °C < T < 125 °C	-2.1		2.1	
$\Delta V_{io}/\Delta T$	Input offset voltage drift	-40 °C < T < 125 °C		1.5	6	µV/°C
ΔV_{io}	Long-term input offset voltage drift (1)	T = 25 °C		1.5		µV/√month
I_{io}	Input offset current			2	15	nA
		-40 °C < T < 125 °C			35	
I_{ib}	Input bias current			8	30	
		-40 °C < T < 125 °C			70	
C_{IN}	Input capacitor			2		pF
R_{IN}	Input impedance			1		TΩ
CMR	Common mode rejection ratio 20 log ($\Delta V_{icm}/\Delta V_{io}$)	V_{icm} = (V_{CC-}) to (V_{CC+}) - 1.5 V, V_{out} = V_{CC}/2	105	129		dB
		-40 °C < T < 125 °C	95			
		V_{icm} = (V_{CC-}) to (V_{CC+}), V_{out} = V_{CC}/2	95	115		
		-40 °C < T < 125 °C	90			
SVR	Supply voltage rejection ratio 20 log ($\Delta V_{CC}/\Delta V_{io}$)	V_{CC} = 4 to 36 V	90	104		
		-40 °C < T < 125 °C	85			
A_{vd}	Large signal voltage gain	R_L= 10 kΩ, V_{out} = 0.5 to 35.5 V	95	114		
		-40 °C < T < 125 °C	90			
V_{OH}	High level output voltage (drop voltage from V_{CC+})	R_L = 10 kΩ		78	150	mV
		-40 °C < T < 125 °C			200	
V_{OL}	Low level output voltage	R_L = 10 kΩ		30	90	
		-40 °C < T < 125 °C			120	
I_{out}	I_{sink}	V_{out} = V_{CC}	25	65		mA
		-40 °C < T < 125 °C	10			
	I_{source}	V_{out} = 0 V	20	50		
		-40 °C < T < 125 °C	10			
I_{CC}	Supply current (per channel)	No load, V_{out} = V_{CC}/2		380	470	µA
		-40 °C < T < 125 °C			550	
AC performance						
GBP	Gain bandwidth product	R_L = 10 kΩ, C_L = 100 pF	1.7	2.5		MHz
		-40 °C < T < 125 °C	1.4			
ϕ_m	Phase margin	R_L = 10 kΩ, C_L = 100 pF		50		degrees
G_m	Gain margin	R_L = 10 kΩ, C_L = 100 pF		8		dB
SR	Negative slew rate	V_{in} = 22.5 to 13.5 V, A_v = 1, 10 % to 90 %, R_L = 10 kΩ, C_L = 100 pF	0.57	0.88		V/µs
		-40 °C < T < 125 °C	0.44			

Symbol	Parameter	Conditions	Min.	Typ.	Max.	Unit
SR	Positive slew rate	V_{in} = 13.5 to 22.5 V, A_v = 1, 10 % to 90 %, R_L = 10 kΩ, C_L = 100 pF	0.60	1.00		V/µs
		-40 °C < T < 125 °C	0.44			
e_n	Equivalent input noise voltage	f = 1 kHz		20		nV/√Hz
		f = 0.1 Hz to 10 Hz		0.7		µVpp
THD+N	Total harmonic distortion + noise	f = 1 kHz, V_{in} = 7 V_{pp}, R_L = 10 kΩ, C_L = 100 pF		0.001		%

1. *Typical value is based on the V_{io} drift observed after 1000h at 125 °C extrapolated to 25 °C using Arrhenius law and assuming an activation energy of 0.7 eV. The operational amplifier is aged in follower mode configuration (see Section 4.5 Section 4.5).*

Figure 3. Supply current vs. supply voltage

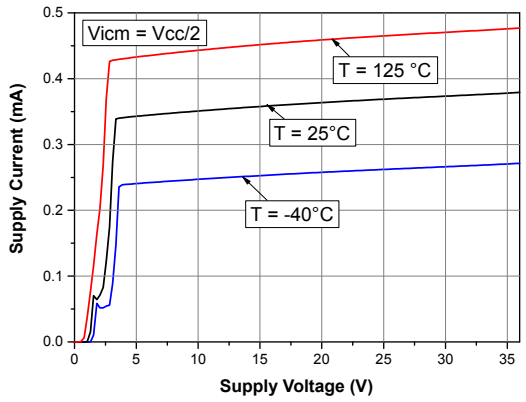

Figure 4. Input offset voltage distribution at V_{CC} = 4 V

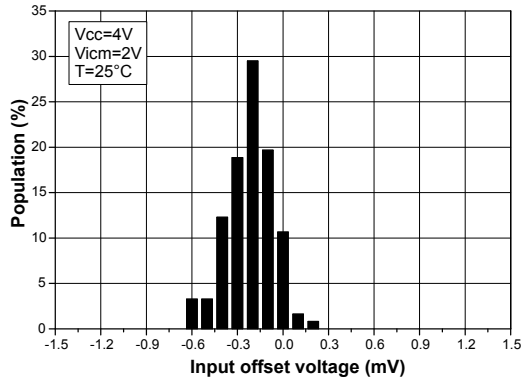

Figure 5. Input offset voltage distribution at V_{CC} = 12 V

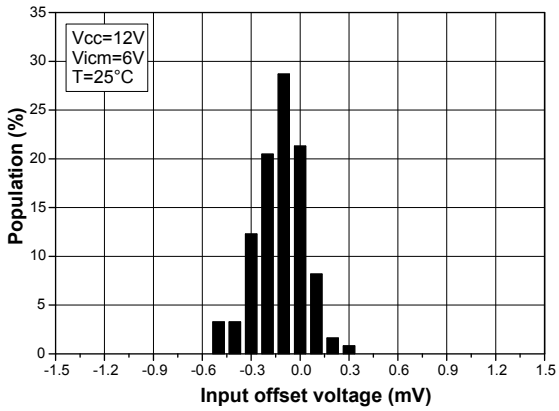

Figure 6. Input offset voltage distribution at V_{CC} = 36 V

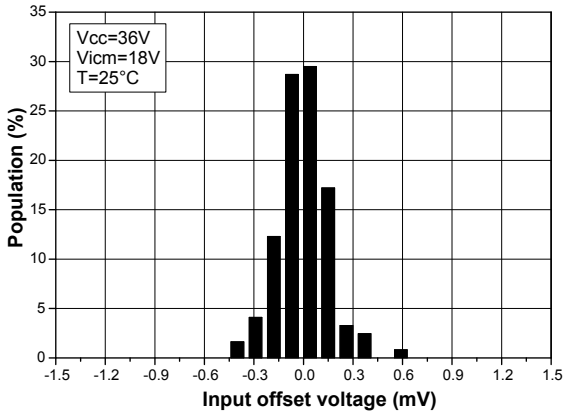

Figure 7. Input offset voltage vs. temperature at V_{CC} = 36 V

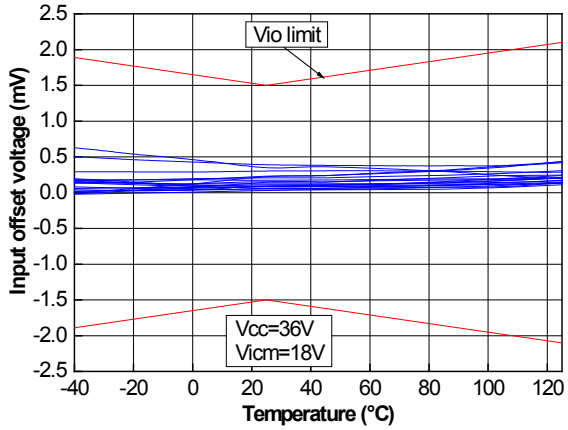

Figure 8. Input offset voltage temperature variation distribution at V_{CC} = 36 V

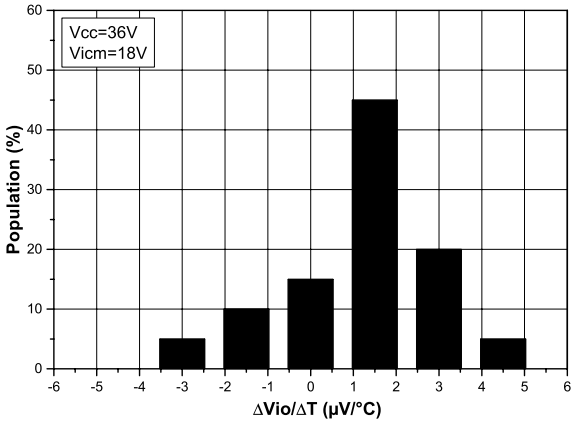

Figure 9. Input offset voltage vs. supply voltage

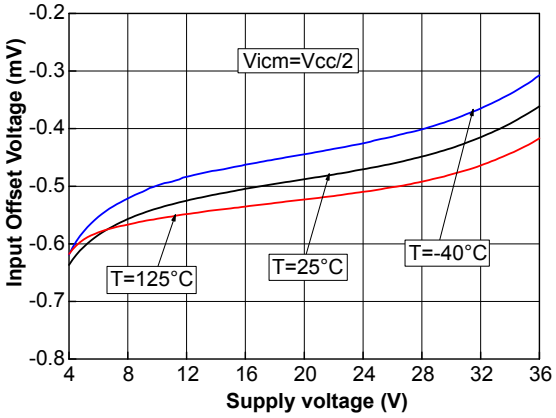

Figure 10. Input offset voltage vs. common-mode voltage at V_{CC} = 4 V

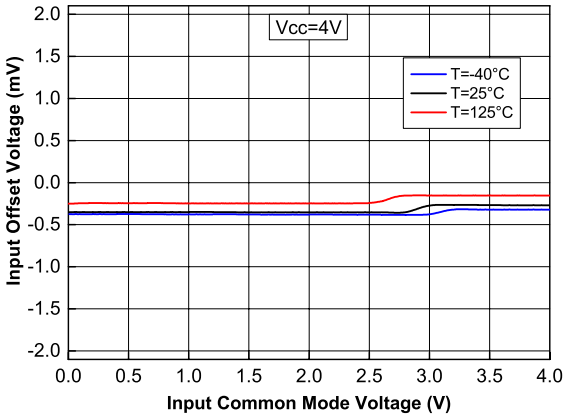

Figure 11. Input offset voltage vs. common-mode voltage at V_{CC} = 36 V

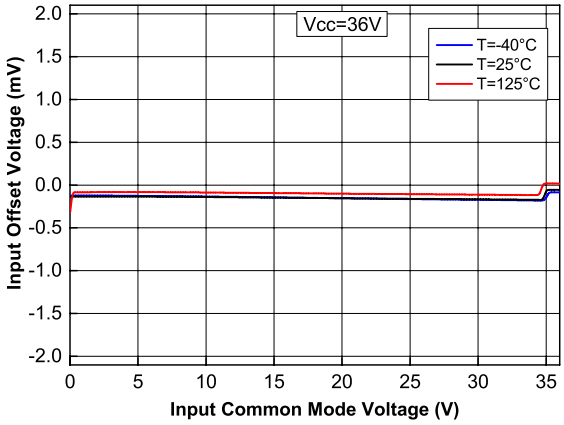

Figure 12. Input bias current vs. temperature at $V_{ICM} = V_{CC}/2$

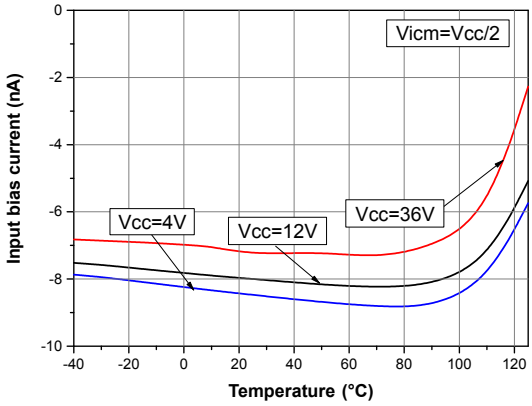

Figure 13. Input bias current vs. common-mode voltage at V_{CC} = 36 V

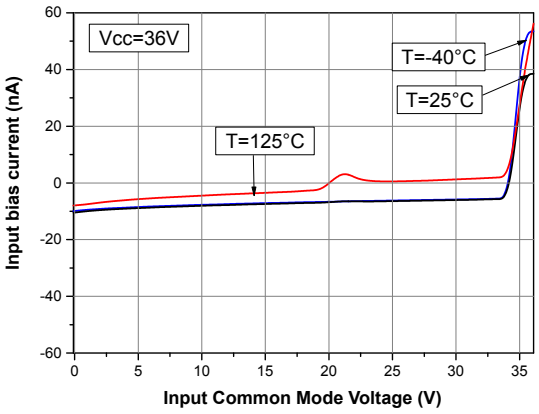

Figure 14. Output current vs. output voltage at V_{CC} = 4 V

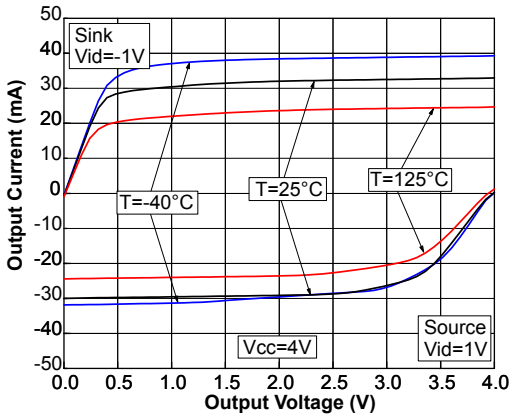

Figure 15. Output current vs. output voltage at V_{CC} = 36 V

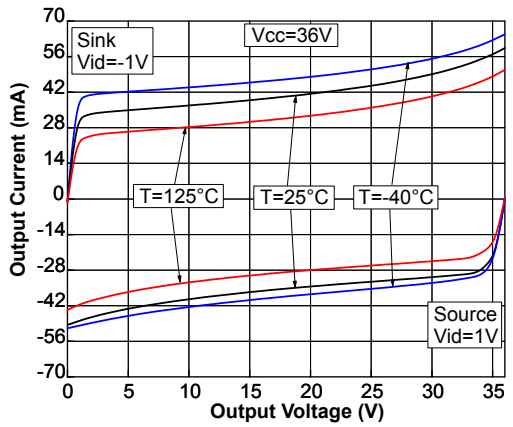

Figure 16. Output voltage (Voh) vs. supply voltage

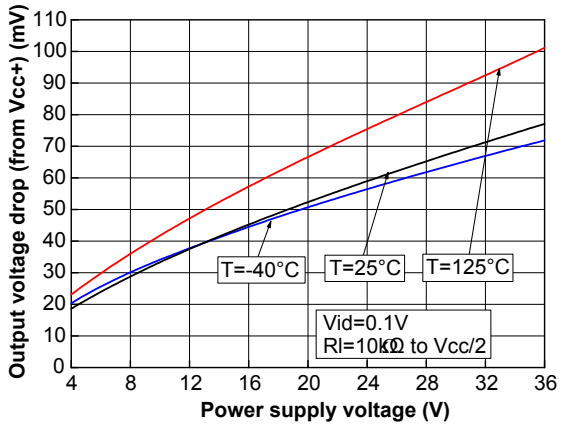

Figure 17. Output voltage (Vol) vs. supply voltage

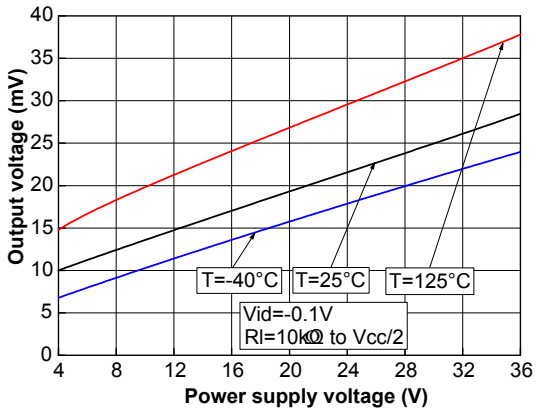

Figure 18. Negative slew rate at V_{CC} = 36 V

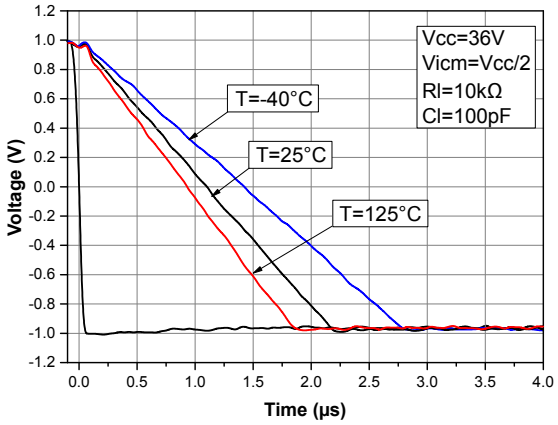

Figure 19. Positive slew rate at V_{CC} = 36 V

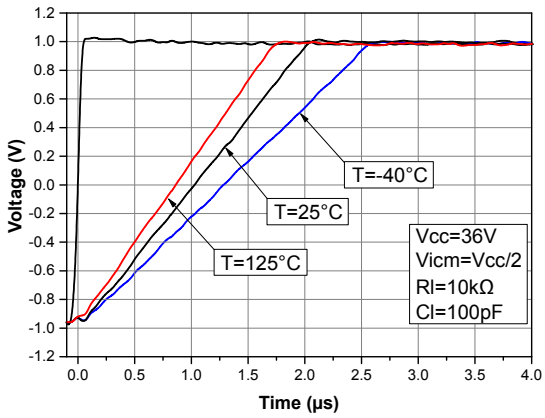

Figure 20. Slew rate vs. supply voltage

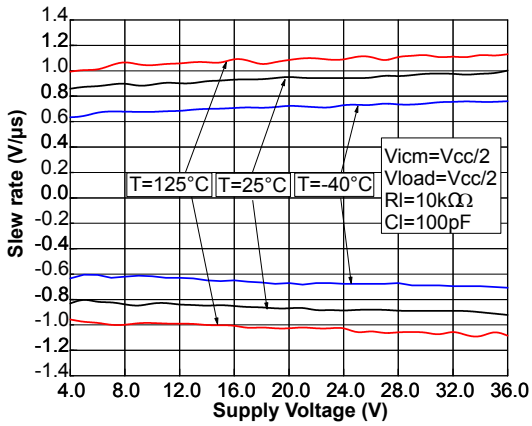

Figure 21. Bode diagram at V_{CC} = 4 V

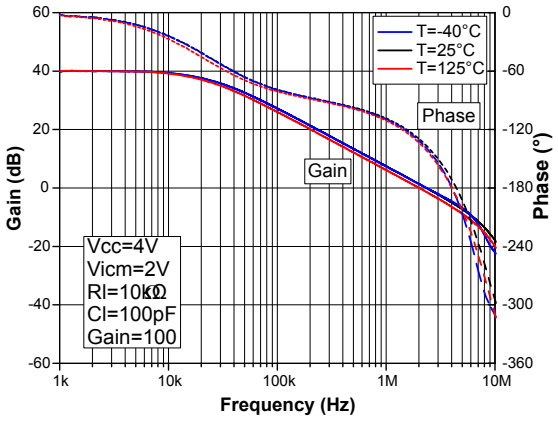

Figure 22. Bode diagram at V_{CC} = 36 V

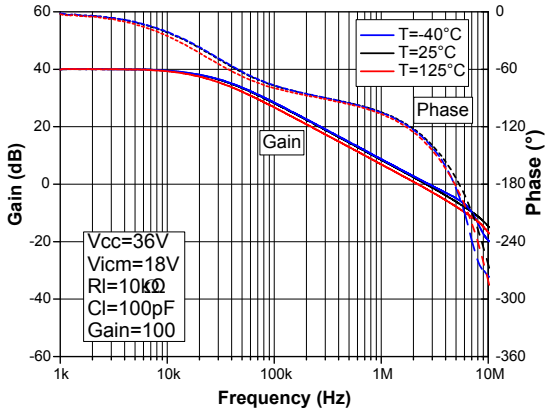

Figure 23. Phase margin vs. output current at V_{CC} = 4 V

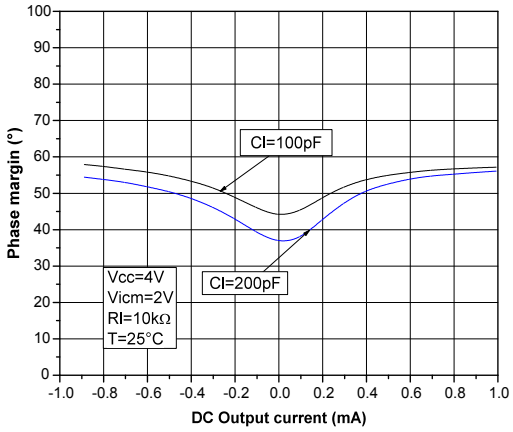

Figure 24. Phase margin vs. output current at V_{CC} = 36 V

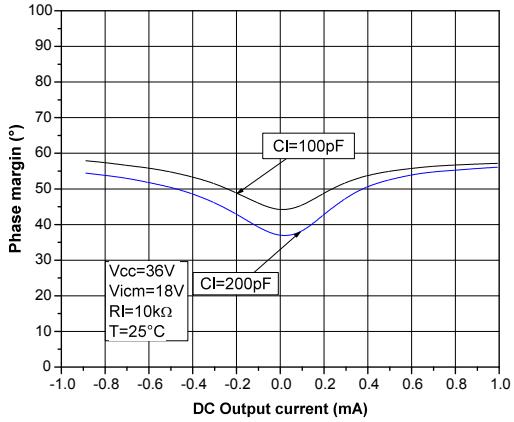

Figure 25. Phase margin vs. capacitive load

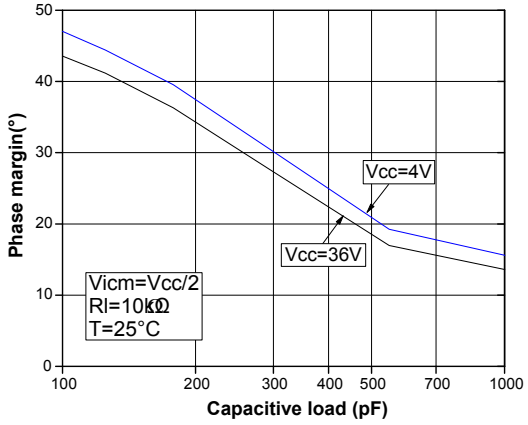

Figure 26. Overshoot vs. capacitive load at V_{CC} = 36 V

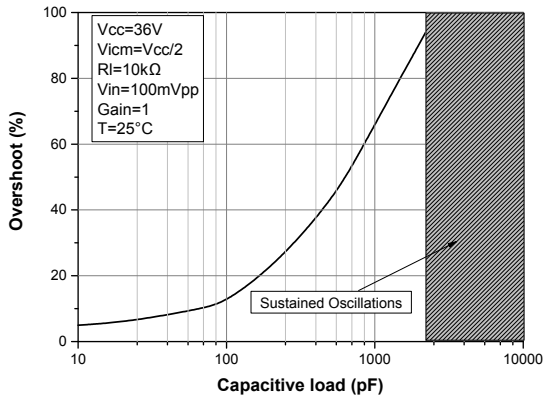

Figure 27. Small step response vs. time at V_{CC} = 4 V

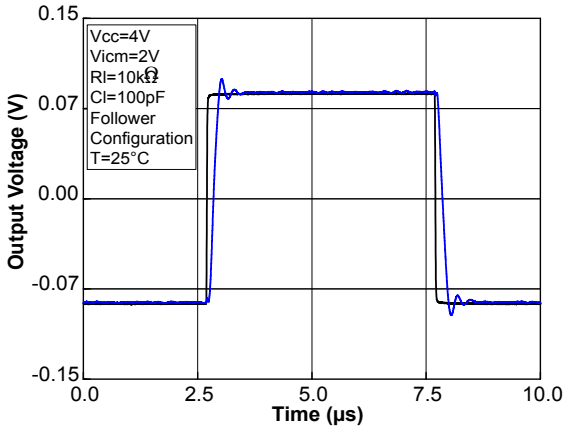

Figure 28. Output desaturation vs. time

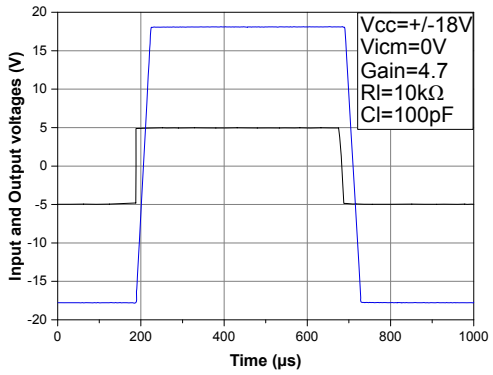

Figure 29. Amplifier behavior close to the rails at V_{CC} = 36 V

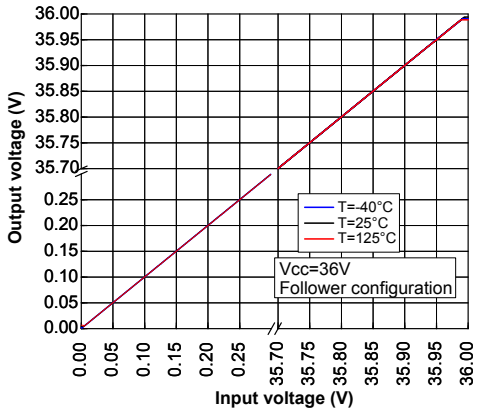

Figure 30. Noise vs. frequency at V_{CC} = 36 V

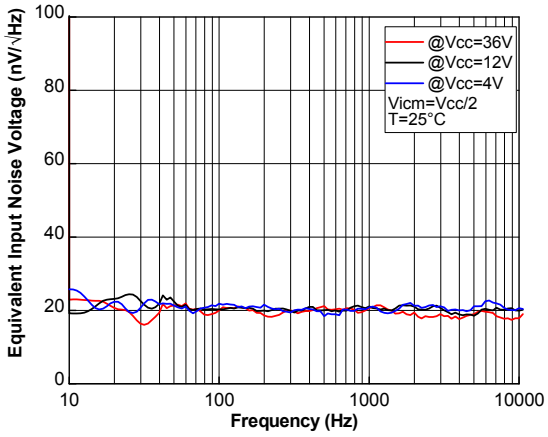

Figure 31. Noise vs. time at V_{CC} = 36 V

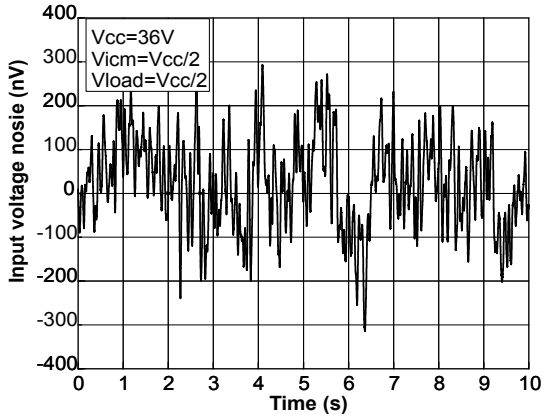

Figure 32. THD+N vs. frequency

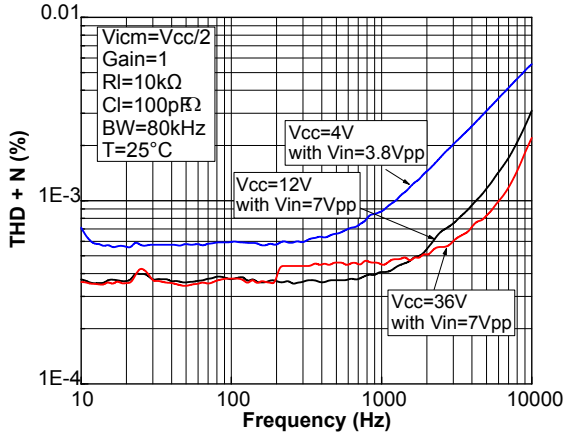

Figure 33. THD+N vs. output voltage

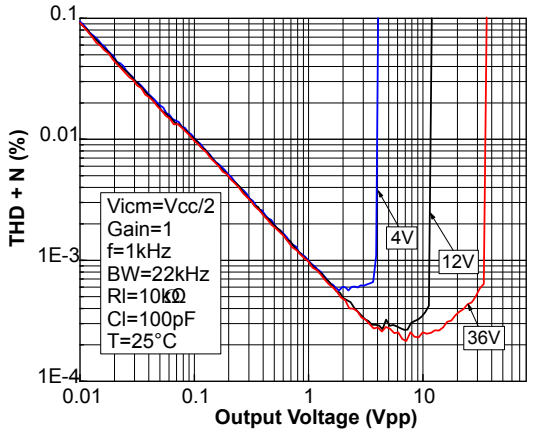

Figure 34. PSRR vs. frequency at V_{CC} = 36 V

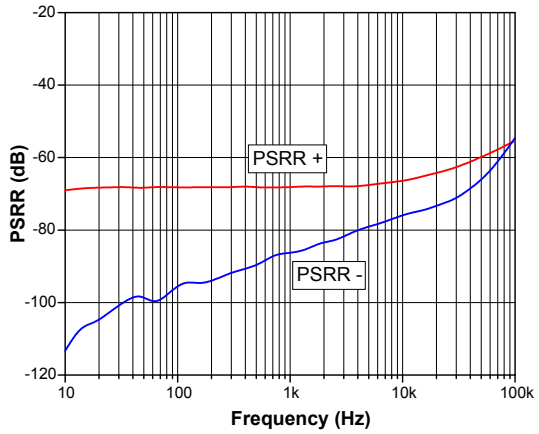

Figure 35. Channel separation vs. frequency at V_{CC}= 36 V

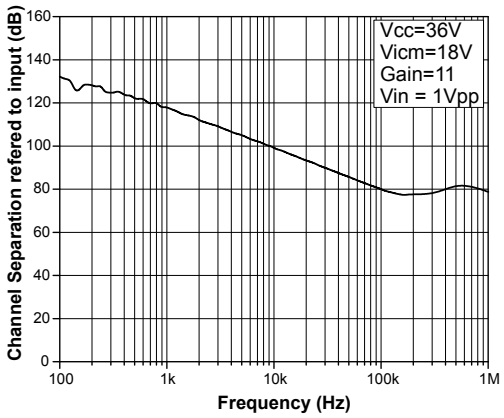

4 Application information

4.1 Operating voltages

The TSB571 and TSB572 can operate from 4 V to 36 V. The parameters are fully specified for 4 V, 12 V, and 36 V power supplies. However, the parameters are stable in the full V_{CC} range. Additionally, the main specifications are guaranteed in extended temperature ranges from -40 to 125 °C.

4.2 Input pin voltage ranges

The TSB571 and TSB572 have an internal ESD diode protection on the inputs. These diodes are connected between the inputs and each supply rail to protect the input transistors from electrical discharge.

If the input pin voltage exceeds the power supply by 0.2 V, the ESD diodes become conductive and excessive current can flow through them. Without limitation this over current can damage the device.

In this case, it is important to limit the current to 10 mA, by adding resistance on the input pin, as shown in Figure 37. Input current limitation.

Figure 36. Input current limitation

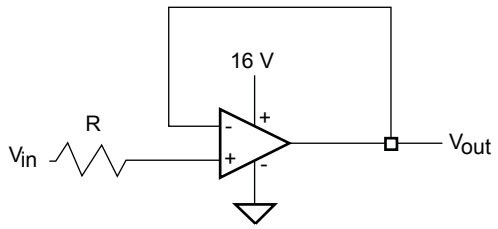

4.3 Rail-to-rail input

The TSB571 and TSB572 have rail-to-rail inputs. The input common mode range is extended from (V_{CC-}) - 0.1 V to (V_{CC+}) + 0.1 V at T = 25 °C.

4.4 Input offset voltage drift over temperature

The maximum input voltage drift variation over temperature is defined as the offset variation related to the offset value measured at 25 °C. The operational amplifier is one of the main circuits of the signal conditioning chain, and the amplifier input offset is a major contributor to the chain accuracy. The signal chain accuracy at 25 °C can be compensated during production at application level. The maximum input voltage drift over temperature enables the system designer to anticipate the effect of temperature variations.

The maximum input voltage drift over temperature is computed using Equation 1.

Equation 1

$$\frac{\Delta V_{io}}{\Delta T} = \max\left|\frac{V_{io}(T) - V_{io}(25\,°C)}{T - 25\,°C}\right|$$

where T = -40 °C and 125 °C.

The TSB571 and TSB572 datasheet maximum value is guaranteed by measurements on a representative sample size ensuring a C_{pk} (process capability index) greater than 1.3.

4.5 Long term input offset voltage drift

To evaluate product reliability, two types of stress acceleration are used:

- Voltage acceleration, by changing the applied voltage
- Temperature acceleration, by changing the die temperature (below the maximum junction temperature allowed by the technology) with the ambient temperature.

The voltage acceleration has been defined based on JEDEC results, and is defined using Equation 2.

Equation 2

$$A_{FV} = e^{\beta \cdot (V_S - V_U)}$$

Where:

A_{FV} is the voltage acceleration factor

β is the voltage acceleration constant in 1/V, constant technology parameter (β = 1)

V_S is the stress voltage used for the accelerated test

V_U is the voltage used for the application

The temperature acceleration is driven by the Arrhenius model, and is defined in Equation 3.

Equation 3

$$A_{FT} = e^{\frac{E_a}{k} \cdot \left(\frac{1}{T_U} - \frac{1}{T_S}\right)}$$

Where:

A_{FT} is the temperature acceleration factor

E_a is the activation energy of the technology based on the failure rate

k is the Boltzmann constant (8.6173 x 10^{-5} eV.K^{-1})

T_U is the temperature of the die when V_U is used (K)

T_S is the temperature of the die under temperature stress (K)

The final acceleration factor, A_F, is the multiplication of the voltage acceleration factor and the temperature acceleration factor (Equation 4).

Equation 4

$$A_F = A_{FT} \times A_{FV}$$

A_F is calculated using the temperature and voltage defined in the mission profile of the product. The A_F value can then be used in Equation 5 to calculate the number of months of use equivalent to 1000 hours of reliable stress duration.

Equation 5

$$\text{Months} = A_F \times 1000\ \text{h} \times 12\ \text{months} / (24\ \text{h} \times 365.25\ \text{days})$$

To evaluate the op amp reliability, a follower stress condition is used where V_{CC} is defined as a function of the maximum operating voltage and the absolute maximum rating (as recommended by JEDEC rules).

The V_{io} drift (in µV) of the product after 1000 h of stress is tracked with parameters at different measurement conditions (see Equation 6).

Equation 6

$$V_{CC} = \max V_{op} \text{ with } V_{icm} = V_{CC} / 2$$

The long term drift parameter (ΔV_{io}), estimating the reliability performance of the product, is obtained using the ratio of the V_{io} (input offset voltage value) drift over the square root of the calculated number of months (Equation 7).

Equation 7

$$\Delta V_{io} = \frac{V_{io}\text{drift}}{\sqrt{(\text{months})}}$$

Where V_{io} drift is the measured drift value in the specified test conditions after 1000 h stress duration.

4.6 Capacitive load

Driving large capacitive loads can cause stability problems. Increasing the load capacitance produces gain peaking in the frequency response, with overshoot and ringing in the step response. It is usually considered that with a gain peaking higher than 2.3 dB an op amp might become unstable.

Generally, unity gain configuration is the worst situation for stability and the ability to drive large capacitive loads.

Figure 38. Stability criteria with a serial resistor at different supply voltages shows the serial resistor that must be added to the output, to make a system stable. Figure 39. Test configuration for Riso shows the test configuration using an isolation resistor, Riso.

Figure 37. Stability criteria with a serial resistor at different supply voltages

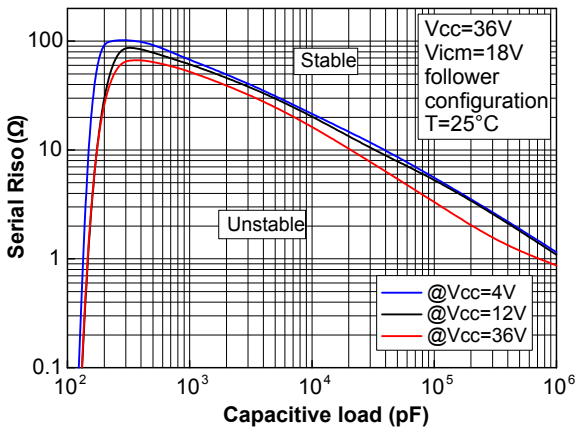

Figure 38. Test configuration for Riso

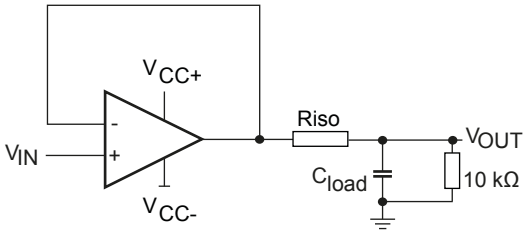

4.7 PCB layout recommendations

Particular attention must be paid to the layout of the PCB tracks connected to the amplifier, load, and power supply. The power and ground traces are critical as they must provide adequate energy and grounding for all circuits. The best practice is to use short and wide PCB traces to minimize voltage drops and parasitic inductance.

In addition, to minimizing parasitic impedance over the entire surface, a multi-via technique that connects the bottom and top layer ground planes together in many locations is often used.

The copper traces that connect the output pins to the load and supply pins should be as wide as possible to minimize trace resistance.

4.8 Optimized application recommendation

It is recommended to place a 22 nF capacitor as close as possible to the supply pin. A good decoupling will help to reduce electromagnetic interference impact.

5 Package information

In order to meet environmental requirements, ST offers these devices in different grades of ECOPACK packages, depending on their level of environmental compliance. ECOPACK specifications, grade definitions and product status are available at: www.st.com. ECOPACK is an ST trademark.

5.1 SOT23-5 package information

Figure 39. SOT23-5 package outline

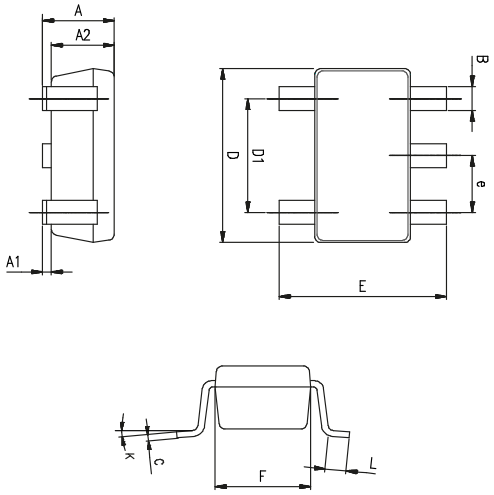

Table 8. SOT23-5 package mechanical data

Ref.	Dimensions					
	Millimeters			Inches		
	Min.	Typ.	Max.	Min.	Typ.	Max.
A	0.90	1.20	1.45	0.035	0.047	0.057
A1			0.15			0.006
A2	0.90	1.05	1.30	0.035	0.041	0.051
B	0.35	0.40	0.50	0.014	0.016	0.020
C	0.09	0.15	0.20	0.004	0.006	0.020
D	2.80	2.90	3.00	0.110	0.114	0.118
D1		1.90			0.075	
e		0.95			0.037	
E	2.60	2.80	3.00	0.102	0.110	0.118
F	1.50	1.60	1.75	0.059	0.063	0.069
L	0.10	0.35	0.60	0.004	0.014	0.024
K	0°		10°	0°		10°

5.2 MiniSO8 package information

Figure 40. MiniSO8 package outline

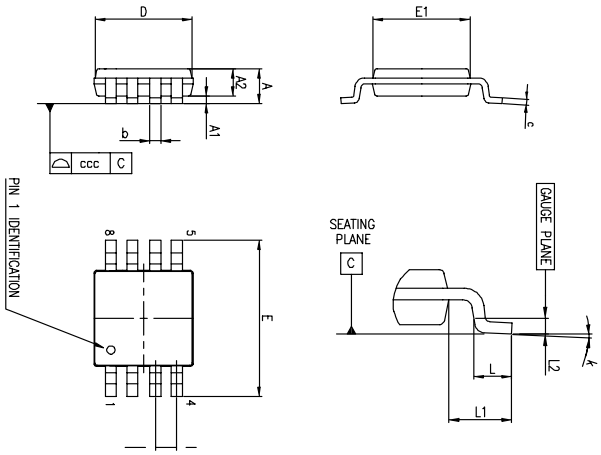

Table 9. MiniSO8 package mechanical data

Ref.	Dimensions					
	Millimeters			Inches		
	Min.	Typ.	Max.	Min.	Typ.	Max.
A			1.1			0.043
A1	0		0.15	0		0.0006
A2	0.75	0.85	0.95	0.030	0.033	0.037
b	0.22		0.40	0.009		0.016
c	0.08		0.23	0.003		0.009
D	2.80	3.00	3.20	0.11	0.118	0.126
E	4.65	4.90	5.15	0.183	0.193	0.203
E1	2.80	3.00	3.10	0.11	0.118	0.122
e		0.65			0.026	
L	0.40	0.60	0.80	0.016	0.024	0.031
L1		0.95			0.037	
L2		0.25			0.010	
k	0°		8°	0°		8°
ccc			0.10			0.004

5.3 DFN8 3x3 package information

Figure 41. DFN8 3x3 package outline and mechanical data

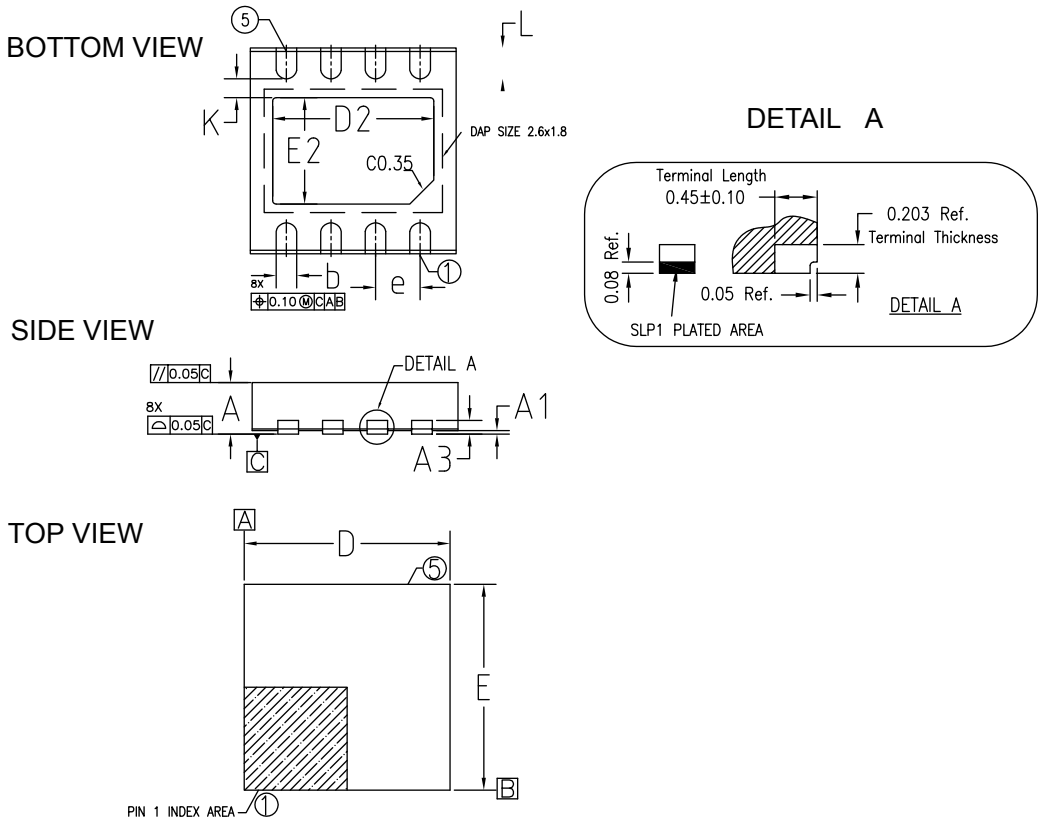

Table 10. DFN8 3x3 mechanical data

Symbol	mm		
	Min.	Typ.	Max.
A	0.70	0.75	0.80
A1	0.0		0.05
A3		0.20 Ref.	
b	0.25	0.30	0.35
D	2.95	3.00	3.05
D2	2.25	2.35	2.45
e		0.65 BSC	
E	2.95	3.00	3.05
E2	1.45	1.55	1.65
L	0.35	0.45	0.55
K		2.75 Ref.	
N		8	

Figure 42. **DFN8 3x3 footprint data**

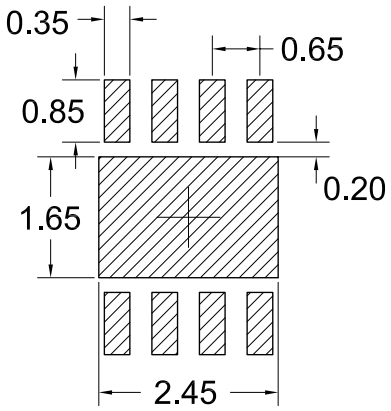

5.4 SO-8 package information

Figure 43. SO-8 package outline

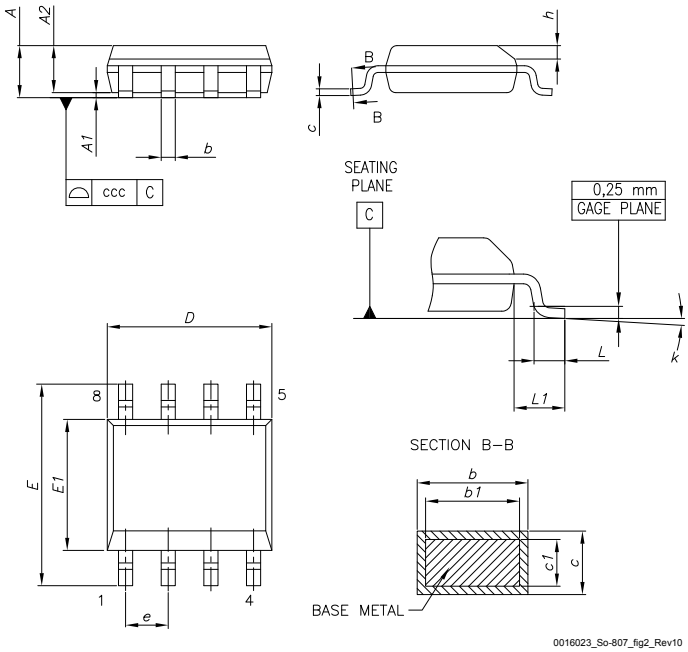

Table 11. SO-8 mechanical data

Dim.	mm		
	Min.	Typ.	Max.
A			1.75
A1	0.10		0.25
A2	1.25		
b	0.31		0.51
b1	0.28		0.48
c	0.10		0.25
c1	0.10		0.23
D	4.80	4.90	5.00
E	5.80	6.00	6.20
E1	3.80	3.90	4.00
e		1.27	
h	0.25		0.50
L	0.40		1.27
L1		1.04	
L2		0.25	
k	0°		8°
ccc			0.10

6 Ordering information

Table 12. Order codes

Order code	Temperature range	Package	Packing	Marking
TSB571ILT	-40 °C to +125 °C	SOT23-5	Tape and reel	K31
TSB571IYLT [(1)]				K32
TSB572IQ2T	-40 °C to 125 °C	DFN8 3x3	Tape and reel	K31
TSB572IYQ2T [(1)]				K32
TSB572IST		MiniSO8		K31
TSB572IYST [(1)]				K32
TSB572IDT		SO8 package		TSB572I

1. *Automotive qualification according to AEC-Q100.*

Revision history

Table 13. Document revision history

Date	Version	Changes
12-Oct-2015	1	Initial release
17-Dec-2015	2	Section 2: "Absolute maximum ratings and operating conditions": updated ESD, MM value. Section 6: "Ordering information": removed footnote (1) from order code TSB572IQ2T
26-Jun-2017	3	In *Table1: "Absolute maximum ratings":* - Updated Latch-up immunity Parameter Value - updated footnote (3)
10-Nov-2017	4	Added: new SO-8 Package information and new order code TSB572IDT Section 6 Ordering information
26-Mar-2018	5	Updated: Section 5.2 DFN8 3x3 package information
22-Jul-2019	6	Added the root part number TSB571 and updated the whole document accordingly
06-May-2020	7	Updated cover page
09-Jun-2021	8	Added V_{io} Typ. value in Table 5, Table 6 and Table 7

Contents

1 Package pin connections 2
2 Absolute maximum ratings and operating conditions 4
3 Electrical characteristics 5
4 Application information 17
4.1 Operating voltages 17
4.2 Input pin voltage ranges 17
4.3 Rail-to-rail input 17
4.4 Input offset voltage drift over temperature 17
4.5 Long term input offset voltage drift 18
4.6 Capacitive load 19
4.7 PCB layout recommendations 19
4.8 Optimized application recommendation 19
5 Package information 20
5.1 SOT23-5 package information 20
5.2 MiniSO8 package information 21
5.3 DFN8 3x3 package information 22
5.4 SO-8 package outline 24
6 Ordering information 25
Revision history 26

List of tables

Table 1. Pin description (SOT23-5) . . . 2
Table 2. Pin description (miniSO8/SO8/DFN8) . . . 3
Table 3. Absolute maximum ratings . . . 4
Table 4. Operating conditions . . . 4
Table 5. Electrical characteristics at V_{cc} = 4 V, V_{icm} = V_{cc}/2, T_{amb} = 25 °C, and R_L connected to V_{cc}/2 (unless otherwise specified) . . . 5
Table 6. Electrical characteristics at V_{cc} = 12 V, V_{icm} = V_{cc}/2, T_{amb} = 25 °C, and R_L connected to V_{cc}/2 (unless otherwise specified) . . . 7
Table 7. Electrical characteristics at V_{cc} = 36 V, V_{icm} = V_{cc}/2, T_{amb} = 25 °C, and R_L connected to V_{cc}/2 (unless otherwise specified) . . . 9
Table 8. SOT23-5 package mechanical data . . . 20
Table 9. MiniSO8 package mechanical data . . . 21
Table 10. DFN8 3x3 mechanical data . . . 22
Table 11. SO-8 mechanical data . . . 24
Table 12. Order codes . . . 25
Table 13. Document revision history . . . 26

List of figures

Figure 1. Pin connections (top view) . . . 2
Figure 2. Pin connections for each package (top view) . . . 3
Figure 3. Supply current vs. supply voltage . . . 11
Figure 4. Input offset voltage distribution at V_{CC} = 4 V . . . 11
Figure 5. Input offset voltage distribution at V_{CC} = 12 V . . . 11
Figure 6. Input offset voltage distribution at V_{CC} = 36 V . . . 11
Figure 7. Input offset voltage vs. temperature at V_{CC} = 36 V . . . 11
Figure 8. Input offset voltage temperature variation distribution at V_{CC} = 36 V . . . 11
Figure 9. Input offset voltage vs. supply voltage . . . 12
Figure 10. Input offset voltage vs. common-mode voltage at V_{CC} = 4 V . . . 12
Figure 11. Input offset voltage vs. common-mode voltage at V_{CC} = 36 V . . . 12
Figure 12. Input bias current vs. temperature at V_{ICM} = V_{CC}/2 . . . 12
Figure 13. Input bias current vs. common-mode voltage at V_{CC} = 36 V . . . 12
Figure 14. Output current vs. output voltage at V_{CC} = 4 V . . . 12
Figure 15. Output current vs. output voltage at V_{CC} = 36 V . . . 13
Figure 16. Output voltage (Voh) vs. supply voltage . . . 13
Figure 17. Output voltage (Vol) vs. supply voltage . . . 13
Figure 18. Negative slew rate at V_{CC} = 36 V . . . 13
Figure 19. Positive slew rate at V_{CC} = 36 V . . . 13
Figure 20. Slew rate vs. supply voltage . . . 13
Figure 21. Bode diagram at V_{CC} = 4 V . . . 14
Figure 22. Bode diagram at V_{CC} = 36 V . . . 14
Figure 23. Phase margin vs. output current at V_{CC} = 4 V . . . 14
Figure 24. Phase margin vs. output current at V_{CC} = 36 V . . . 14
Figure 25. Phase margin vs. capacitive load . . . 14
Figure 26. Overshoot vs. capacitive load at V_{CC} = 36 V . . . 14
Figure 27. Small step response vs. time at V_{CC} = 4 V . . . 15
Figure 28. Output desaturation vs. time . . . 15
Figure 29. Amplifier behavior close to the rails at V_{CC} = 36 V . . . 15
Figure 30. Noise vs. frequency at V_{CC} = 36 V . . . 15
Figure 31. Noise vs. time at V_{CC} = 36 V . . . 15
Figure 32. THD+N vs. frequency . . . 15
Figure 33. THD+N vs. output voltage . . . 16
Figure 34. PSRR vs. frequency at V_{CC} = 36 V . . . 16
Figure 35. Channel separation vs. frequency at V_{CC}= 36 V . . . 16
Figure 36. Input current limitation . . . 17
Figure 37. Stability criteria with a serial resistor at different supply voltages . . . 19
Figure 38. Test configuration for Riso . . . 19
Figure 39. SOT23-5 package outline . . . 20
Figure 40. MiniSO8 package outline . . . 21
Figure 41. DFN8 3x3 package outline and mechanical data . . . 22
Figure 42. DFN8 3x3 footprint data . . . 23
Figure 43. SO-8 package outline . . . 24

IMPORTANT NOTICE – PLEASE READ CAREFULLY

STMicroelectronics NV and its subsidiaries (“ST”) reserve the right to make changes, corrections, enhancements, modifications, and improvements to ST products and/or to this document at any time without notice. Purchasers should obtain the latest relevant information on ST products before placing orders. ST products are sold pursuant to ST’s terms and conditions of sale in place at the time of order acknowledgement.

Purchasers are solely responsible for the choice, selection, and use of ST products and ST assumes no liability for application assistance or the design of Purchasers’ products.

No license, express or implied, to any intellectual property right is granted by ST herein.

Resale of ST products with provisions different from the information set forth herein shall void any warranty granted by ST for such product.

ST and the ST logo are trademarks of ST. For additional information about ST trademarks, please refer to www.st.com/trademarks. All other product or service names are the property of their respective owners.

Information in this document supersedes and replaces information previously supplied in any prior versions of this document.

© 2021 STMicroelectronics – All rights reserved