LL-503UYC2E-Y2-2BE

DATA SHEET

QC:Li ENG:Liu Prepared By:Wu

sales@prom-elec.com / ООО ПРОМЭЛЕКТРОНИКА

Features

- Standard T-1diameter type package
- Wide viewing angle
- General purpose leads
- Reliable and rugged

Package Dimension:

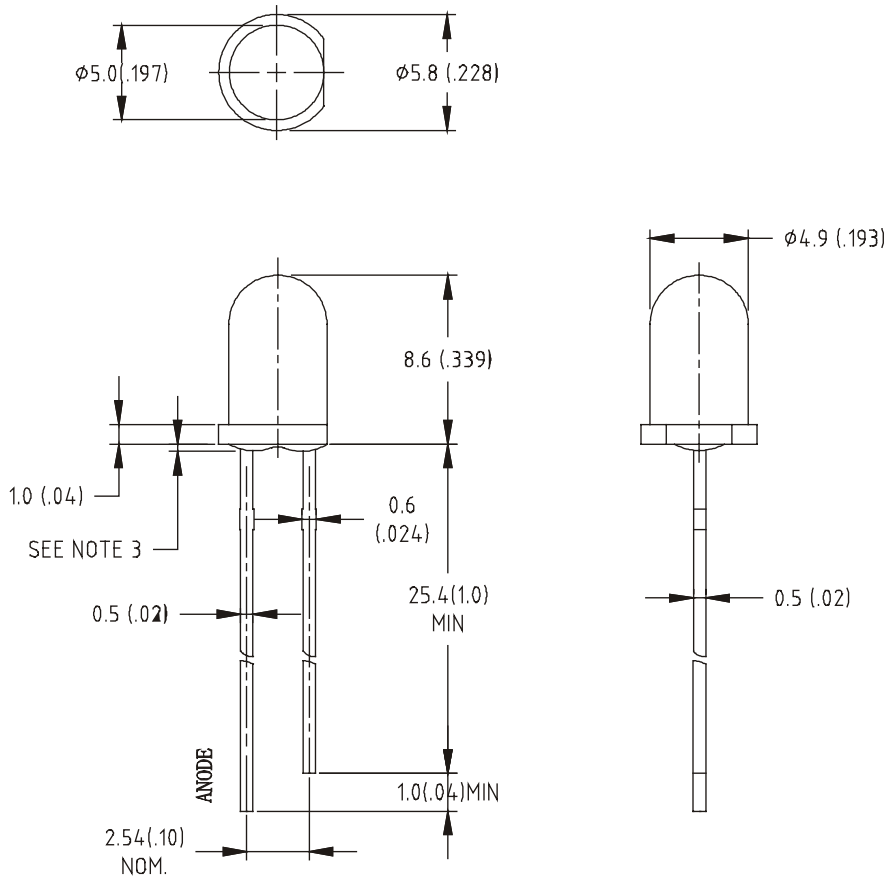

Part NO.	Lens Color	Source Color
LL-503UYC2E-Y2-2BE	Water Clear	Super Bright Yellow

Notes:

1. All dimensions are in millimeters (inches).
2. Tolerance is ±0.25(.010”)mm unless otherwise noted.
3. Protruded resin under flange is 1.0mm(.04”) max
4. Lead spacing is measured where the leads emerge from the package.
5. Specifications are subject to change without notice

Absolute Maximum Ratings at Ta=25℃

Parameter	MAX.	Unit
Power Dissipation	100	mW
Peak Forward Current (1/10 Duty Cycle, 0.1ms Pulse Width)	160	mA
Continuous Forward Current	50	mA
Derating Linear From 50℃	0.4	mA/℃
Reverse Voltage	5	V
Operating Temperature Range	-40℃ to +80℃	
Storage Temperature Range	-40℃ to +80℃	
Lead Soldering Temperature [4mm(.157") From Body]	260℃ for 5 Seconds	

Electrical Optical Characteristics at Ta=25℃

Parameter	Symbol	Min.	Typ.	Max.	Unit	Test Condition
Luminous Intensity	Iv	1800	2500	---	mcd	I_F=20mA (Note 1)
Viewing Angle	$2\theta_{1/2}$	---	45	50	Deg	(Note 2)
Peak Emission Wavelength	λp	---	590	---	nm	I_F=20mA
Dominant Wavelength	λd	---	588	---	nm	I_F=20mA (Note 3)
Spectral Line Half-Width	$\triangle\lambda$	---	19	---	nm	I_F=20mA
Forward Voltage	V_F	1.7	2.1	2.6	V	I_F=20mA
Reverse Current	I_R	---	---	100	μA	V_R=5V

Note:

1. Luminous intensity is measured with a light sensor and filter combination that approximates the CIE eye-response curve.
2. $\theta_{1/2}$ is the off-axis angle at which the luminous intensity is half the axial luminous intensity.
3. The dominant wavelength (λd) is derived from the CIE chromaticity diagram and represents the single wavelength which defines the color of the device.

Typical Electrical / Optical Characteristics Curves
(25℃ Ambient Temperature Unlebvss Otherwise Noted)

Spectral Radiance (Peak @ 588 nm)

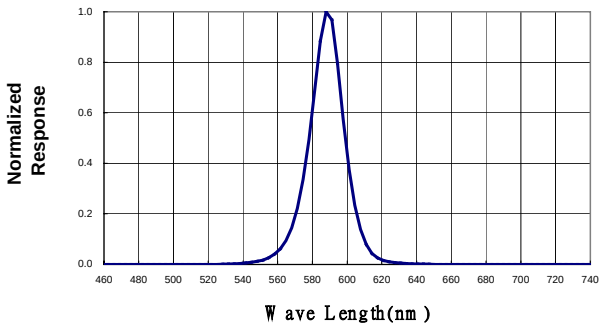

Forward Current vs Forward Voltage

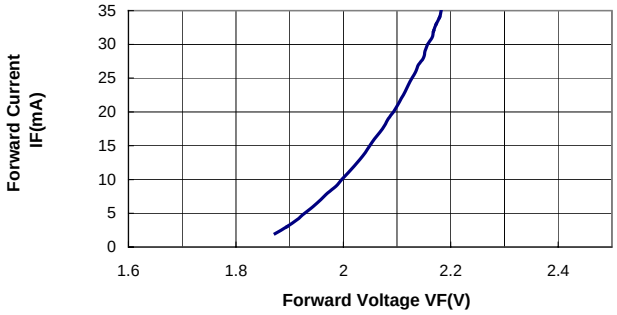

Relative Luminous Intensity vs Forward Current

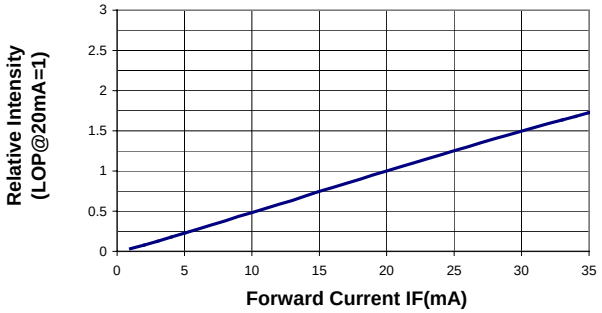

Beam Patter

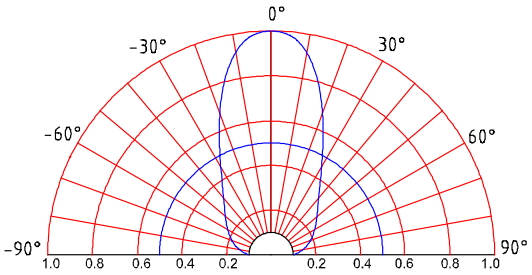

Relative Intensity (LOP @ MAX=1)