TSV630, TSV630A, TSV631, TSV631A

Rail-to-rail input/output, 60 µA, 880 kHz, 5 V CMOS operational amplifiers

Datasheet - production data

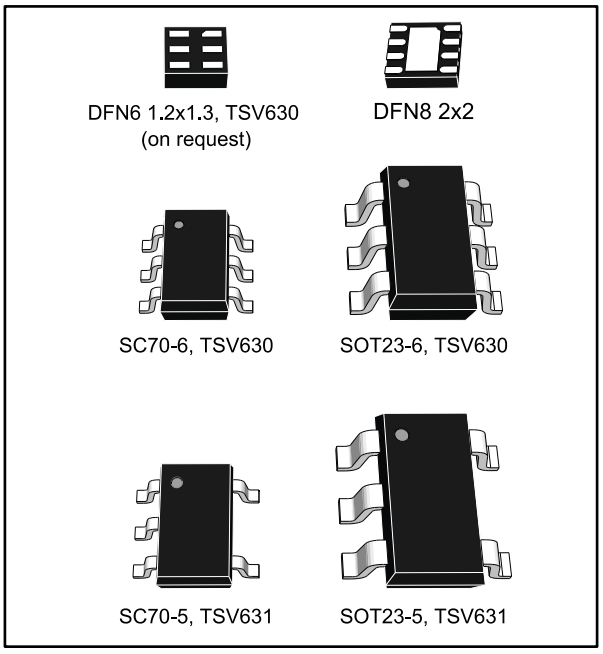

Features

- Low offset voltage: 500 µV max (A version)
- Low power consumption: 60 µA typ at 5 V
- Low supply voltage: 1.5 V - 5.5 V
- Gain bandwidth product: 880 kHz typ
- Unity gain stability
- Low power shutdown mode: 5 nA typ
- High output current: 63 mA at V_{CC} = 5 V
- Low input bias current: 1 pA typ
- Rail-to-rail input and output
- Extended temperature range: -40 °C to 125 °C
- Automotive qualification

Related products

- See the TSV521 series for higher merit factor (1.15 MHz for 45 µA)
- See the TSV611 (120 kHz for 9 µA) or the TSV621 (420 kHz for 29 µA) for more power savings

Applications

- Battery-powered applications
- Portable devices
- Active filtering
- Medical instrumentation

Description

The TSV630 and TSV631 devices are single operational amplifiers offering low voltage, low power operation, and rail-to-rail input and output.

These devices have a very low input bias current and a low offset voltage making them ideal for applications that require precision. They can operate at power supplies ranging from 1.5 V to 5.5 V, and are therefore very suitable for battery-powered devices, extending battery life.

These op-amps feature an excellent speed/power consumption ratio, offering an 880 kHz gain bandwidth while consuming only 60 µA at a 5 V supply voltage. They are unity gain stable for capacitive loads up to 100 pF.

The devices are internally adjusted to provide very narrow dispersion of AC and DC parameters. The TSV630 provides a shutdown function. All devices are offered in micropackages and are guaranteed for industrial temperature ranges from -40 ° C to 125 ° C.

These features combined make the TSV630 and TSV631 ideal for sensor interfaces, battery-supplied and portable applications, as well as active filtering.

This is information on a product in full production. www.st.com

sales@prom-elec.com / ООО ПРОМЭЛЕКТРОНИКА

Contents

1 Package pin connections 3

2 Absolute maximum ratings and operating conditions 4

3 Electrical characteristics 5

4 Application information 13

4.1 Operating voltages 13

4.2 Rail-to-rail input 13

4.3 Rail-to-rail output 13

4.4 Shutdown function (TSV630) 14

4.5 Optimization of DC and AC parameters 15

4.6 Driving resistive and capacitive loads 15

4.7 PCB layouts 15

4.8 Macromodel 16

5 Package information 17

5.1 DFN6 1.2x1.3 package information 18

5.2 DFN8 2x2 package information 20

5.3 SC70-6 (or SOT323-6) package information 22

5.4 SOT23-6 package information 24

5.5 SC70-5 (or SOT323-5) package information 25

5.6 SOT23-5 package information 26

6 Ordering information 27

7 Revision history 28

1 Package pin connections

Figure 1: Pin connections for each package (top view)

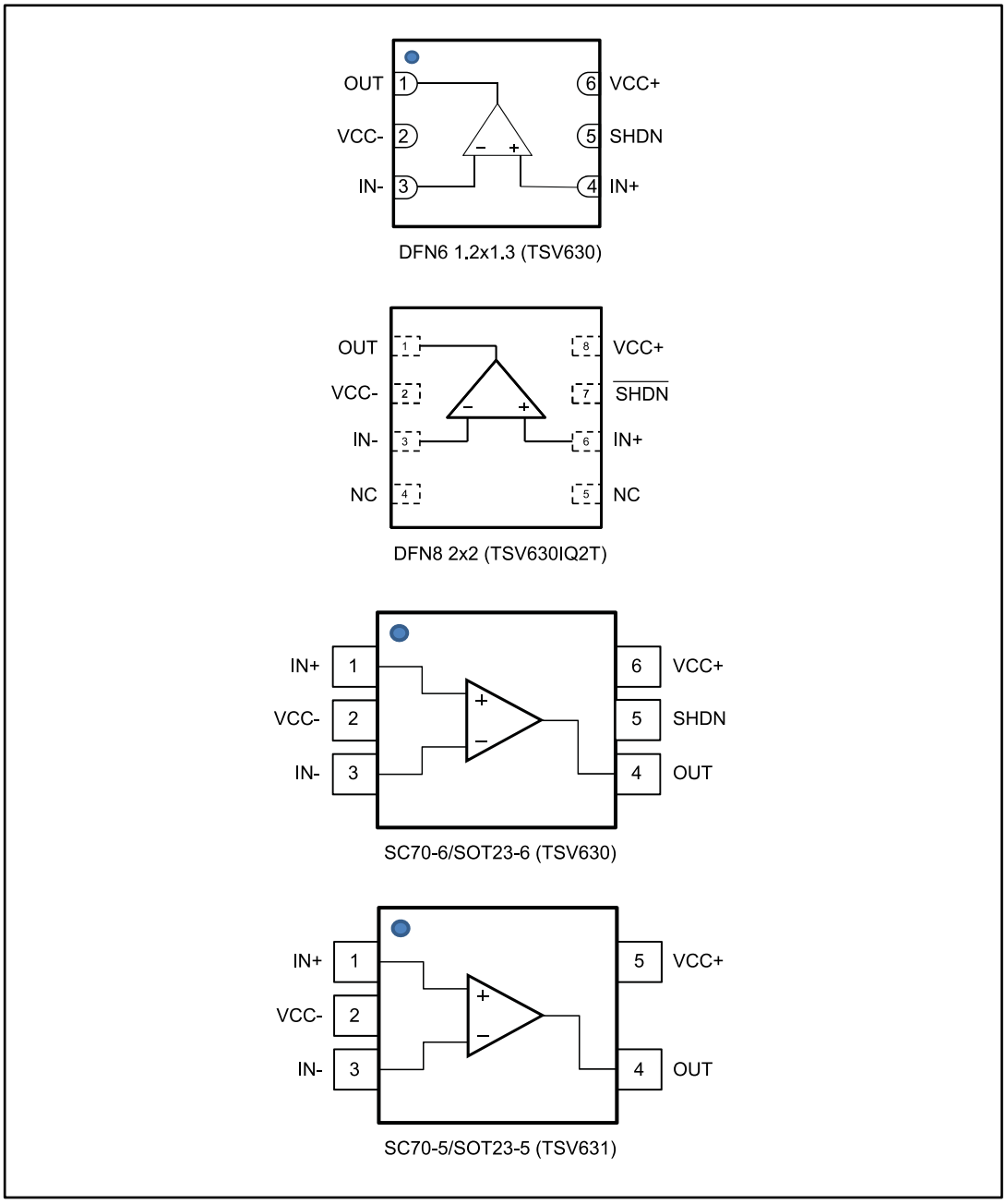

1. The exposed pad of the DFN8 2x2 can be connected to VCC- or left floating.

2 Absolute maximum ratings and operating conditions

Table 1: Absolute maximum ratings (AMR)

Symbol	Parameter		Value	Unit
V_{CC}	Supply voltage (1)		6	V
V_{id}	Differential input voltage (2)		$\pm V_{CC}$	
V_{in}	Input voltage (3)		$(V_{CC-}) - 0.2$ to $(V_{CC+}) + 0.2$	
I_{in}	Input current (4)		10	mA
$\overline{SHDN}$	Shutdown voltage (3)		6	V
T_{stg}	Storage temperature		-65 to 150	°C
R_{thja} (5) (6)	Thermal resistance junction-to-ambient	DFN6 1.2x1.3	232	°C/W
		DFN8 2x2	57	
		SC70-6	232	
		SOT23-6	240	
		SC70-5	205	
		SOT23-5	250	
T_j	Maximum junction temperature		150	°C
ESD	HBM: human body model (7)		4	kV
	MM: machine model (8)		300	V
	CDM: charged device model (9)		1.5	kV
	Latch-up immunity		200	mA

Notes:

(1)All voltage values, except the differential voltage are with respect to the network ground terminal.

(2)The differential voltage is the non-inverting input terminal with respect to the inverting input terminal.

(3)V_{CC} - V_{in} must not exceed 6 V

(4)Input current must be limited by a resistor in series with the inputs.

(5)R_{th} are typical values.

(6)Short-circuits can cause excessive heating and destructive dissipation.

(7)100 pF discharged through a 1.5 kΩ resistor between two pins of the device, done for all couples of pin combinations with other pins floating

(8)A 200 pF capacitor is charged to the specified voltage, then discharged directly between two pins of the device with no external series resistor (internal resistor < 5 Ω), done for all couples of pin combinations with other pins floating

(9)All pins plus package are charged together to the specified voltage and then discharged directly to the ground

Table 2: Operating conditions

Symbol	Parameter	Value	Unit
V_{CC}	Supply voltage	1.5 to 5.5	V
V_{icm}	Common mode input voltage range	$(V_{CC-}) - 0.1$ to $(V_{CC+}) + 0.1$	
T_{oper}	Operating free air temperature range	-40 to 125	°C

3 Electrical characteristics

Table 3: Electrical characteristics at VCC+ = 1.8 V with VCC- = 0 V, Vicm = VCC/2, Tamb = 25 ° C and RL connected to VCC/2 (unless otherwise specified)

Symbol	Parameter	Conditions	Min.	Typ.	Max.	Unit
DC performance						
V_{io}	Offset voltage	TSV630, TSV631			3	mV
		TSV630A, TSV631A			0.5	
		-40 °C < T_{op} < 125 °C, TSV630, TSV631			4.5	
		-40 °C < T_{op} < 125 °C, TSV630A, TSV631A			2	
$\Delta V_{io}/\Delta T$	Input offset voltage drift			2		µV/°C
I_{io}	Input offset current, $V_{out} = V_{CC}/2$			1	10 (1)	pA
		-40 °C < T_{op} < 125 °C		1	100	
I_{ib}	Input bias current, $V_{out} = V_{CC}/2$			1	10 (1)	
		-40 °C < T_{op} < 125 °C		1	100	
CMR	Common mode rejection ratio 20 log, $\Delta V_{ic}/\Delta V_{io}$	0 V to 1.8 V, V_{out} = 0.9 V	53	74		dB
		-40 °C < T_{op} < 125 °C	51			
A_{vd}	Large signal voltage gain	R_L= 10 kΩ, V_{out} = 0.5 V to 1.3 V	85	95		
		-40 °C < T_{op} < 125 °C	80			
V_{OH}	High level output voltage, $V_{OH} = V_{CC} - V_{out}$	R_L = 10 kΩ		5	35	mV
		-40 °C < T_{op} < 125 °C			50	
V_{OL}	Low level output voltage	R_L = 10 kΩ		4	35	
		-40 °C < T_{op} < 125 °C			50	
I_{out}	I_{sink}	V_o = 1.8 V	6	12		mA
		-40 °C < T_{op} < 125 °C	4			
	I_{source}	V_o = 0 V	6	10		
		-40 °C < T_{op} < 125 °C	4			
I_{CC}	Supply current, $\overline{SHDN}$ = V_{CC+}	No load, $V_{out} = V_{CC}/2$	40	50	60	µA
		-40 °C < T_{op} < 125 °C			62	
AC performance						
GBP	Gain bandwidth product	R_L = 2 kΩ, C_L = 100 pF, f = 100 kHz	700	790		kHz
ϕm	Phase margin	R_L = 2 kΩ, C_L = 100 pF		48		Degrees
G_m	Gain margin			11		dB
SR	Slew rate	R_L = 2 kΩ, C_L = 100 pF, Av = 1	0.2	0.27		V/µs
e_n	Equivalent input noise voltage	f = 1 kHz		67		nV/√Hz
		f = 10 kHz		53		

Notes:

(1)Guaranteed by design.

Table 4: Shutdown characteristics VCC = 1.8 V

Symbol	Parameter	Conditions	Min.	Typ.	Max.	Unit
DC performance						
I_{CC}	Supply current in shutdown mode (all operators)	$\overline{SHDN}$ = V_{CC-}		2.5	50	nA
		-40 °C < T_{op} < 85 °C			200	
		-40 °C < T_{op} < 125 °C			1.5	µA
t_{on}	Amplifier turn-on time	R_L = 2 kΩ, Vout = (V_{CC-}) + 0.2 V to (V_{CC+}) - 0.2 V		300		ns
t_{off}	Amplifier turn-off time	R_L = 2 kΩ, Vout = (V_{CC-}) + 0.2 V to (V_{CC+}) - 0.2 V		20		
V_{IH}	$\overline{SHDN}$ logic high		1.3			V
V_{IL}	$\overline{SHDN}$ logic low				0.5	
I_{IH}	$\overline{SHDN}$ current high	$\overline{SHDN}$ = V_{CC+}		10		pA
I_{IL}	$\overline{SHDN}$ current low	$\overline{SHDN}$ = V_{CC-}		10		
I_{OLeak}	Output leakage in shutdown mode	$\overline{SHDN}$ = V_{CC-}		50		
		-40 °C < T_{op} < 125 °C		1		nA

Table 5: Electrical characteristics at VCC+ = 3.3 V, VCC- = 0 V, Vicm = VCC/2, Tamb = 25 ° C, RL connected to VCC/2 (unless otherwise specified)

Symbol	Parameter	Conditions	Min.	Typ.	Max.	Unit
DC performance						
V_{io}	Offset voltage	TSV630, TSV631			3	mV
		TSV630A, TSV631A			0.5	
		-40 °C < T_{op} < 125 °C, TSV630, TSV631			4.5	
		-40 °C < T_{op} < 125 °C, TSV630A, TSV631A			2	
$\Delta V_{io}/\Delta T$	Input offset voltage drift			2		µV/°C
I_{io}	Input offset current			1	10 (1)	pA
		-40 °C < T_{op} < 125 °C		1	100	
I_{ib}	Input bias current			1	10 (1)	
		-40 °C < T_{op} < 125 °C		1	100	
CMR	Common mode rejection ratio 20 log, $\Delta V_{ic}/\Delta V_{io}$	0 V to 3.3 V, V_{out} = 1.75 V	57	79		dB
		-40 °C < T_{op} < 125 °C	53			
A_{vd}	Large signal voltage gain	R_L = 10 kΩ, V_{out} = 0.5 V to 2.8 V	88	98		
		-40 °C < T_{op} < 125 °C	83			
V_{OH}	High level output voltage, $V_{OH} = V_{CC} - V_{out}$	R_L = 10 kΩ		6	35	mV
		-40 °C < T_{op} < 125 °C			50	
V_{OL}	Low level output voltage	R_L = 10 kΩ		7	35	
		-40 °C < T_{op} < 125 °C			50	
I_{out}	I_{sink}	V_o = 3.3 V	30	45		mA
		-40 °C < T_{op} < 125 °C	25	42		
	I_{source}	V_o = 0 V	30	38		
		-40 °C < T_{op} < 125 °C	25			
I_{CC}	Supply current, $\overline{SHDN}$ = V_{CC+}	No load, V_{out} = 1.75 V	43	55	64	µA
		-40 °C < T_{op} < 125 °C			66	
AC performance						
GBP	Gain bandwidth product	R_L = 2 kΩ, C_L = 100 pF, f = 100 kHz	710	860		kHz
ϕm	Phase margin	R_L = 2 kΩ, C_L = 100 pF		50		Degrees
G_m	Gain margin			11		dB
SR	Slew rate	R_L = 2 kΩ, C_L = 100 pF, Av = 1	0.22	0.29		V/µs
e_n	Equivalent input noise voltage	f = 1 kHz		64		nV/√Hz
		f = 10 kHz		51		

Notes:

(1)Guaranteed by design.

Table 6: Electrical characteristics at VCC+ = 5 V with VCC- = 0 V, Vicm = VCC/2, Tamb = 25° C and RL connected to VCC/2 (unless otherwise specified)

Symbol	Parameter	Conditions	Min.	Typ.	Max.	Unit
DC performance						
V_{io}	Offset voltage	TSV630, TSV631			3	mV
		TSV630A, TSV631A			0.5	
		-40 °C < T_{op} < 125 °C, TSV630, TSV631			4.5	
		-40 °C < T_{op} < 125 °C, TSV630A, TSV631A			2	
$\Delta V_{io}/\Delta T$	Input offset voltage drift			2		µV/°C
I_{io}	Input offset current, $V_{out} = V_{CC}/2$			1	10 (1)	pA
		-40 °C < T_{op} < 125 °C		1	100	
I_{ib}	Input bias current, $V_{out} = V_{CC}/2$			1	10 (1)	
		-40 °C < T_{op} < 125 °C		1	100	
CMR	Common mode rejection ratio 20 log, $\Delta V_{ic}/\Delta V_{io}$	0 V to 5 V, V_{out} = 2.5 V	60	80		dB
		-40 °C < T_{op} < 125 °C	55			
SVR	Supply voltage rejection ratio 20 log, $\Delta V_{CC}/\Delta V_{io}$	V_{CC} = 1.8 to 5 V	75	102		
		-40 °C < T_{op} < 125 °C				
A_{vd}	Large signal voltage gain	R_L= 10 kΩ, V_{out} = 0.5 V to 4.5 V	89	98		
		-40 °C < T_{op} < 125 °C	84			
V_{OH}	High level output voltage, $V_{OH} = V_{CC} - V_{out}$	R_L = 10 kΩ		7	35	mV
		-40 °C < T_{op} < 125 °C			50	
V_{OL}	Low level output voltage	R_L = 10 kΩ		6	35	
		-40 °C < T_{op} < 125 °C			50	
I_{out}	I_{sink}	V_o = 5 V	40	69		mA
		-40 °C < T_{op} < 125 °C	35	65		
	I_{source}	V_o = 0 V	40	74		
		-40 °C < T_{op} < 125 °C	36	68		
I_{CC}	Supply current $\overline{SHDN}$ = V_{CC+}	No load, $V_{out} = V_{CC}/2$	50	60	69	µA
		-40 °C < T_{op} < 125 °C			72	
AC performance						
GBP	Gain bandwidth product	R_L = 2 kΩ, C_L= 100 pF, f = 100 kHz	730	880		kHz
F_u	Unity gain frequency	R_L = 2 kΩ, C_L = 100 pF,		830		
ϕm	Phase margin			50		Degrees
G_m	Gain margin			12		dB
SR	Slew rate	R_L = 2 kΩ, C_L = 100 pF, Av = 1	0.25	0.34		V/µs
e_n	Equivalent input noise voltage	f = 1 kHz		60		nV/√Hz
		f = 10 kHz		47		

Symbol	Parameter	Conditions	Min.	Typ.	Max.	Unit
THD+e_n	Total harmonic distortion	f = 1 kHz, A_V = 1, R_L = 100 kΩ, V_{icm} = V_{CC}/2, Vout = 2 V_{PP}		0.0017		%

Notes:

(1)Guaranteed by design.

Table 7: Shutdown characteristics VCC = 5 V

Symbol	Parameter	Conditions	Min.	Typ.	Max.	Unit
DC performance						
I_{CC}	Supply current in shutdown mode (all operators)	$\overline{SHDN}$ = V_{CC-}		5	50	nA
		-40 °C < T_{op} < 85 °C			200	
		-40 °C < T_{op} < 125 °C			1.5	µA
t_{on}	Amplifier turn-on time	R_L = 2 kΩ, Vout = (V_{CC-}) + 0.2 V to (V_{CC+}) - 0.2 V		300		ns
t_{off}	Amplifier turn-off time	R_L = 2 kΩ, Vout = (V_{CC-}) + 0.2 V to (V_{CC+}) - 0.2 V		30		
V_{IH}	$\overline{SHDN}$ logic high		4.5			V
V_{IL}	$\overline{SHDN}$ logic low				0.5	
I_{IH}	$\overline{SHDN}$ current high	$\overline{SHDN}$ = V_{CC+}		10		pA
I_{IL}	$\overline{SHDN}$ current low	$\overline{SHDN}$ = V_{CC-}		10		
I_{OLeak}	Output leakage in shutdown mode	$\overline{SHDN}$ = V_{CC-}		50		
		-40 °C < T_{op} < 125 °C		1		nA

Figure 2: Supply current vs. supply voltage at Vicm = VCC/2

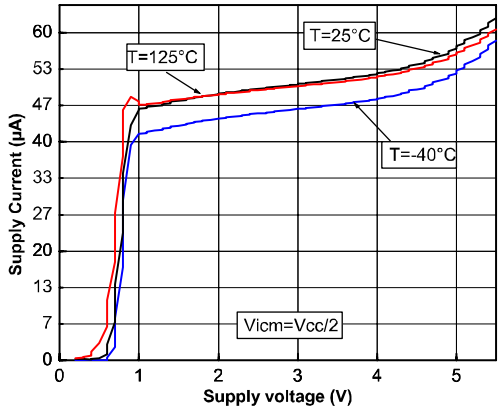

Figure 3: In-series resistor (Riso) vs. capacitive load

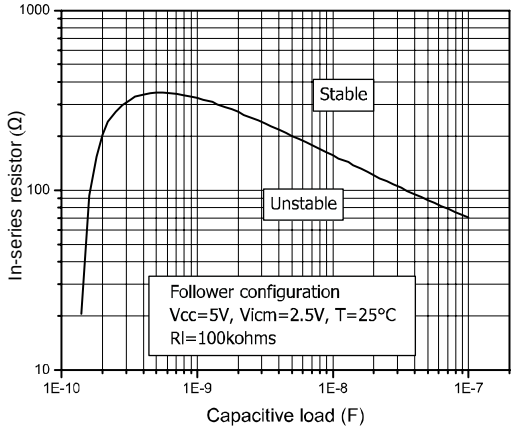

Figure 4: Output current vs. output voltage at VCC = 5 V

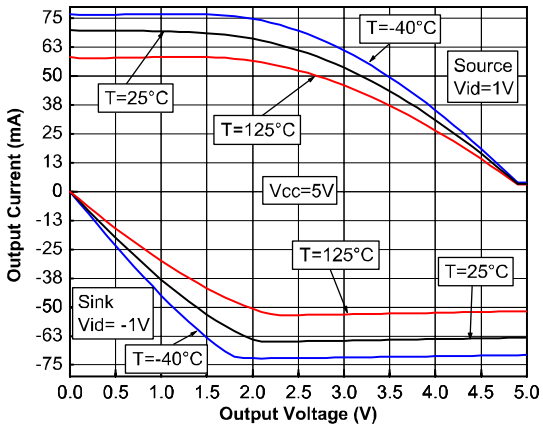

Figure 5: Voltage gain and phase vs. frequency at VCC = 1.5 V

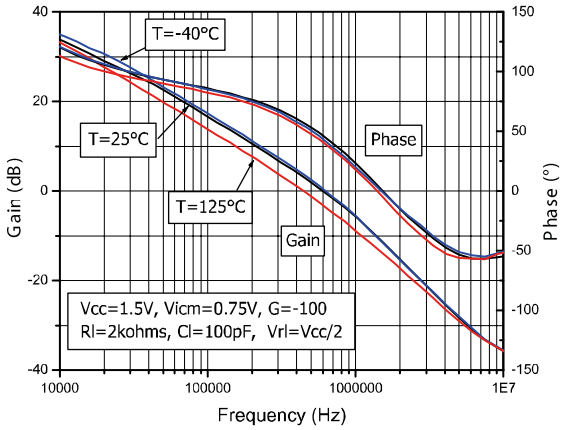

Figure 6: Voltage gain and phase vs. frequency at VCC = 5 V

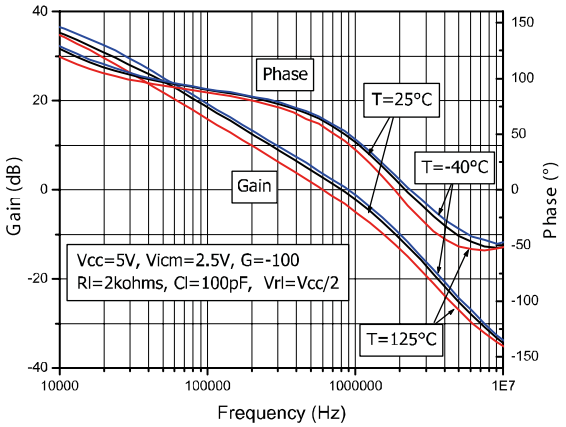

Figure 7: Phase margin vs. output current at VCC = 5 V

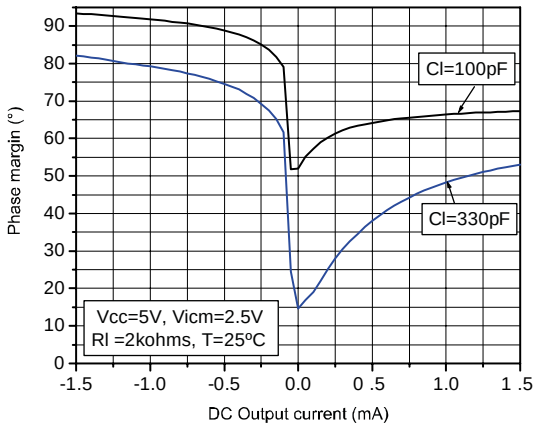

Figure 8: Positive slew rate vs. time

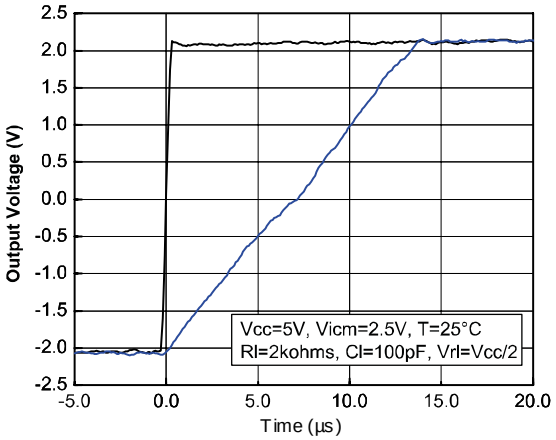

Figure 9: Negative slew rate vs. time

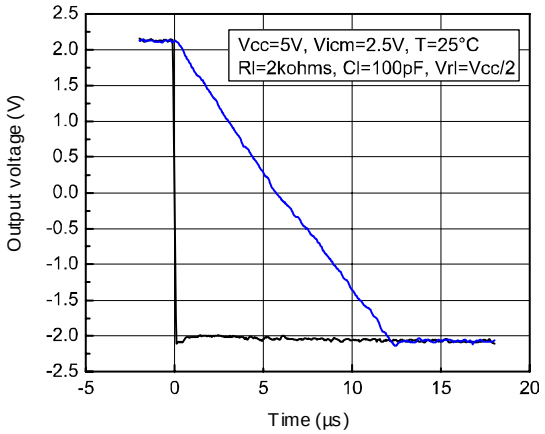

Figure 10: Positive slew rate vs. supply voltage

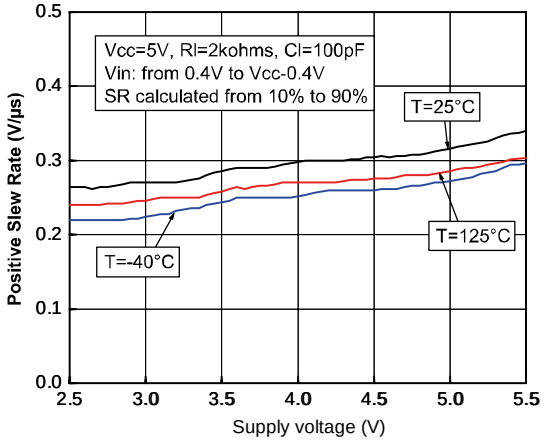

Figure 11: Negative slew rate vs. supply voltage

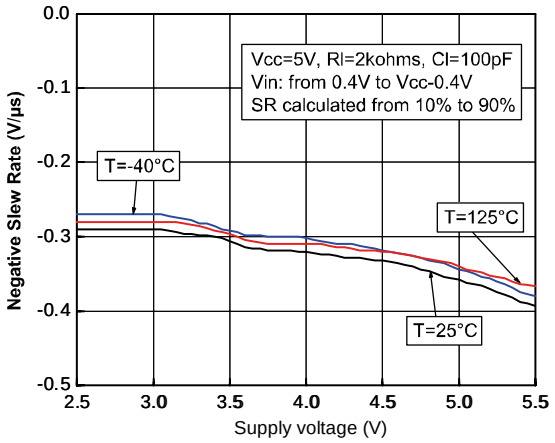

Figure 12: Distortion + noise vs. output voltage (RL = 2 kΩ)

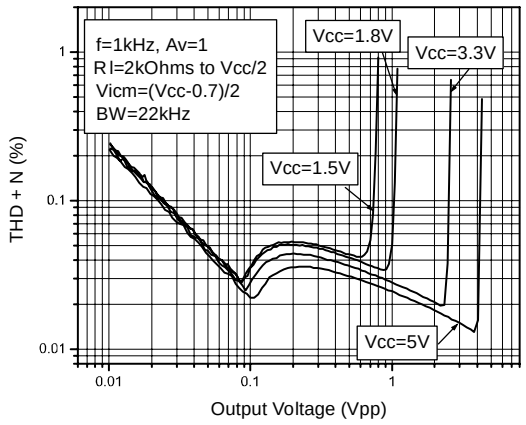

Figure 13: Distortion + noise vs. output voltage (RL = 100 kΩ)

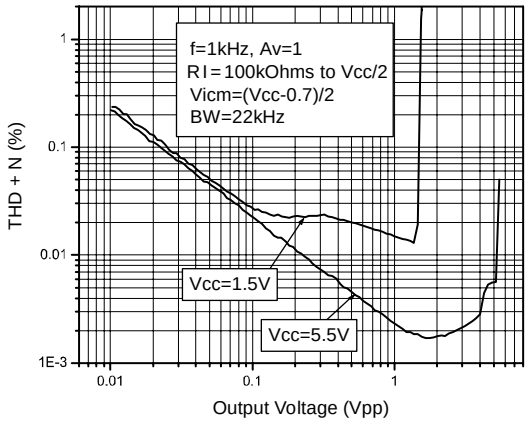

Figure 14: Distortion + noise vs. frequency and input voltage

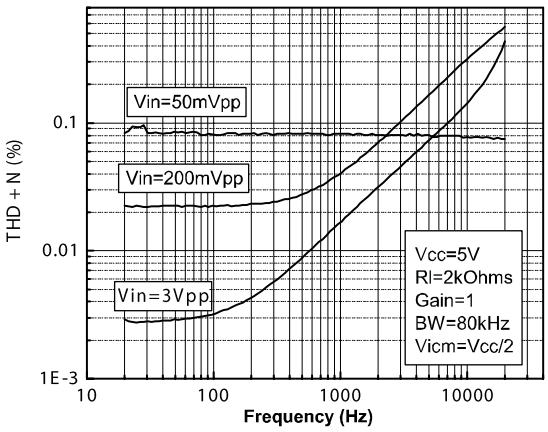

Figure 15: Distortion + noise vs. frequency and output load resistor

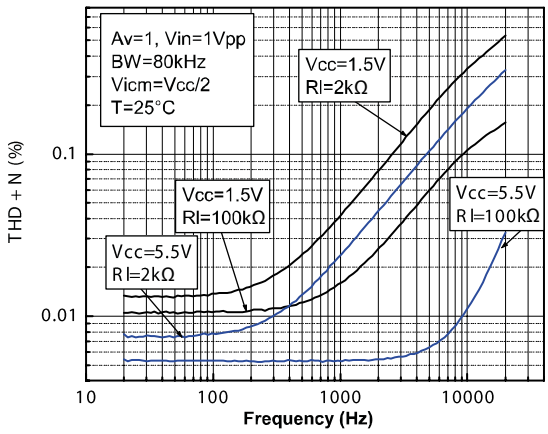

Figure 16: Noise vs. frequency

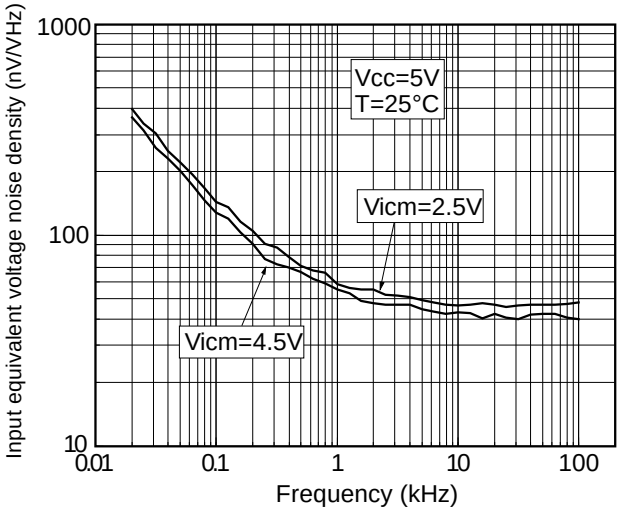

4 Application information

4.1 Operating voltages

The TSV630 and TSV631 can operate from 1.5 V to 5.5 V. Their parameters are fully specified for 1.8-V, 3.3-V, and 5-V power supplies. However, the parameters are very stable in the full V_{CC} range and several characterization curves show the TSV63x characteristics at 1.5 V. In addition, the main specifications are guaranteed in extended temperature ranges from -40 °C to 125 °C.

4.2 Rail-to-rail input

The TSV630 and TSV631 are built with two complementary PMOS and NMOS input differential pairs. The devices have a rail-to-rail input, and the input common mode range is extended from (V_{CC-}) - 0.1 V to (V_{CC+}) + 0.1 V. The transition between the two pairs appears at (V_{CC+}) - 0.7 V. In the transition region, the performance of CMRR, PSRR, V_{io} and THD is slightly degraded (as shown in *Figure 17* and *Figure 18* for V_{io} vs. V_{icm}).

Figure 17: Input offset voltage vs input common mode at VCC = 1.5 V

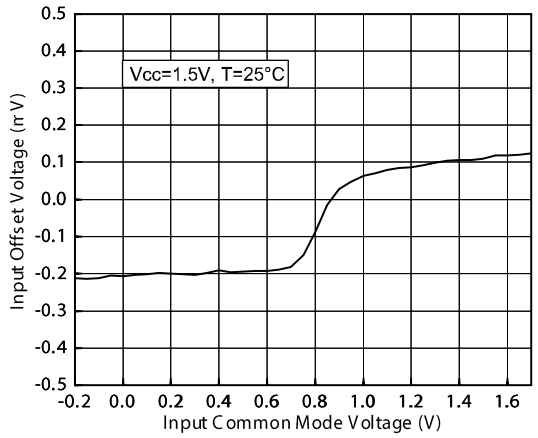

Figure 18: Input offset voltage vs input common mode at VCC = 5 V

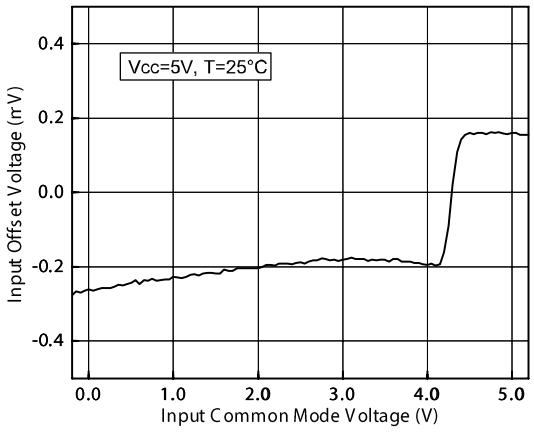

The device is guaranteed without phase reversal.

4.3 Rail-to-rail output

The operational amplifiers' output levels can go close to the rails: to a maximum of 35 mV above and below the rail when a 10 kΩ resistive load is connected to $V_{CC}/2$.

4.4 Shutdown function (TSV630)

The operational amplifier is enabled when the $\overline{SHDN}$ pin is pulled high. To disable the amplifier, the $\overline{SHDN}$ must be pulled down to V_{CC-}. When in shutdown mode, the amplifier output is in a high impedance state. The $\overline{SHDN}$ pin must never be left floating, but must be tied to V_{CC+} or V_{CC-}.

The turn-on and turn-off time are calculated for an output variation of ±200 mV (*Figure 19* and *Figure 20* show the test configurations).

Figure 21 and *Figure 22* show the amplifier output voltage behavior when the $\overline{SHDN}$ pin is toggled high and low.

Figure 19: Test configuration for turn-on time (Vout pulled down)

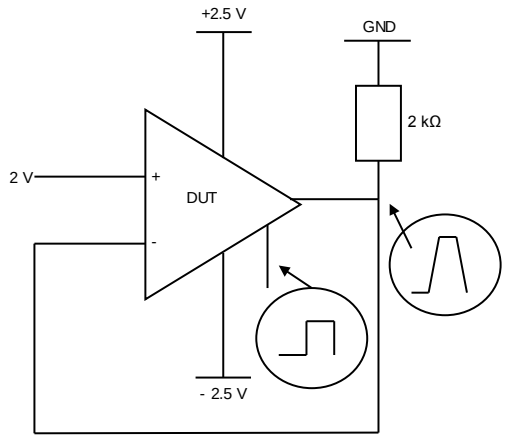

Figure 20: Test configuration for turn-off time (Vout pulled down)

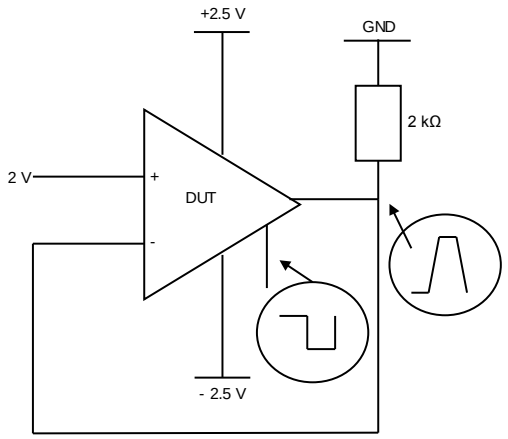

Figure 21: Turn-on time, VCC = ±2.5 V, Vout pulled down, T = 25 °C

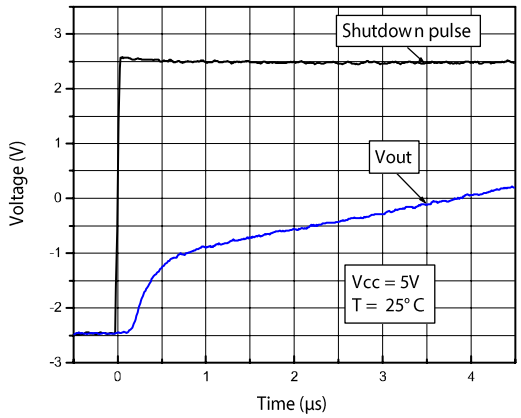

Figure 22: Turn-off time, VCC = ±2.5 V, Vout pulled down, T = 25 °C

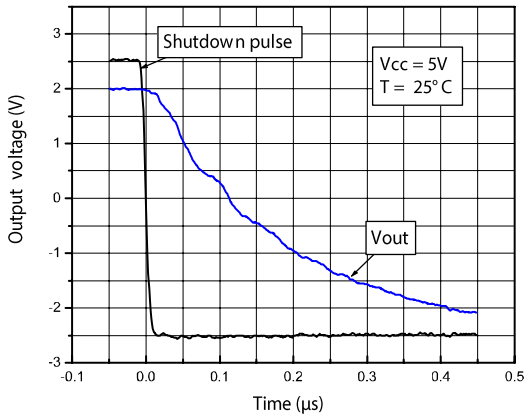

4.5 Optimization of DC and AC parameters

These devices use an innovative approach to reduce the spread of the main DC and AC parameters. An internal adjustment achieves a very narrow spread of the current consumption (60 µA typical, min/max at ±17 %). Parameters linked to the current consumption value, such as GBP, SR and AVd, benefit from this narrow dispersion. All parts present a similar speed and the same behavior in terms of stability. In addition, the minimum values of GBP and SR are guaranteed (GBP = 730 kHz minimum and SR = 0.25 V/µs minimum).

4.6 Driving resistive and capacitive loads

These products are micro-power, low-voltage operational amplifiers optimized to drive rather large resistive loads, above 2 kΩ. For lower resistive loads, the THD level may significantly increase.

In a *follower* configuration, these operational amplifiers can drive capacitive loads up to 100 pF with no oscillations. When driving larger capacitive loads, adding an in-series resistor at the output can improve the stability of the devices (see *Figure 23* for recommended in-series resistor values). Once the in-series resistor value has been selected, the stability of the circuit should be tested on the bench and simulated with the simulation model.

Figure 23: In-series resistor vs. capacitive load

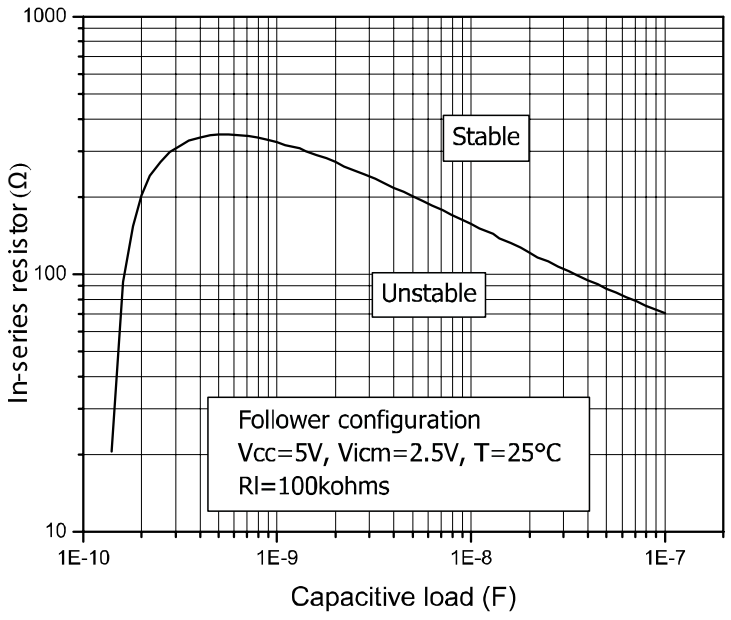

4.7 PCB layouts

For correct operation, it is advised to add 10 nF decoupling capacitors as close as possible to the power supply pins.

4.8 Macromodel

An accurate macromodel of the TSV630 and TSV631 is available on STMicroelectronics' web site at ***www.st.com***. This model is a trade-off between accuracy and complexity (that is, time simulation) of the TSV63x operational amplifiers. It emulates the nominal performances of a typical device within the specified operating conditions mentioned in the datasheet. It also helps to validate a design approach and to select the right operational amplifier, *but it* does not replace on-board measurements.

5 Package information

In order to meet environmental requirements, ST offers these devices in different grades of ECOPACK® packages, depending on their level of environmental compliance. ECOPACK® specifications, grade definitions and product status are available at: ***www.st.com***. ECOPACK® is an ST trademark.

5.1 DFN6 1.2x1.3 package information

Figure 24: DFN6 1.2x1.3 package outline

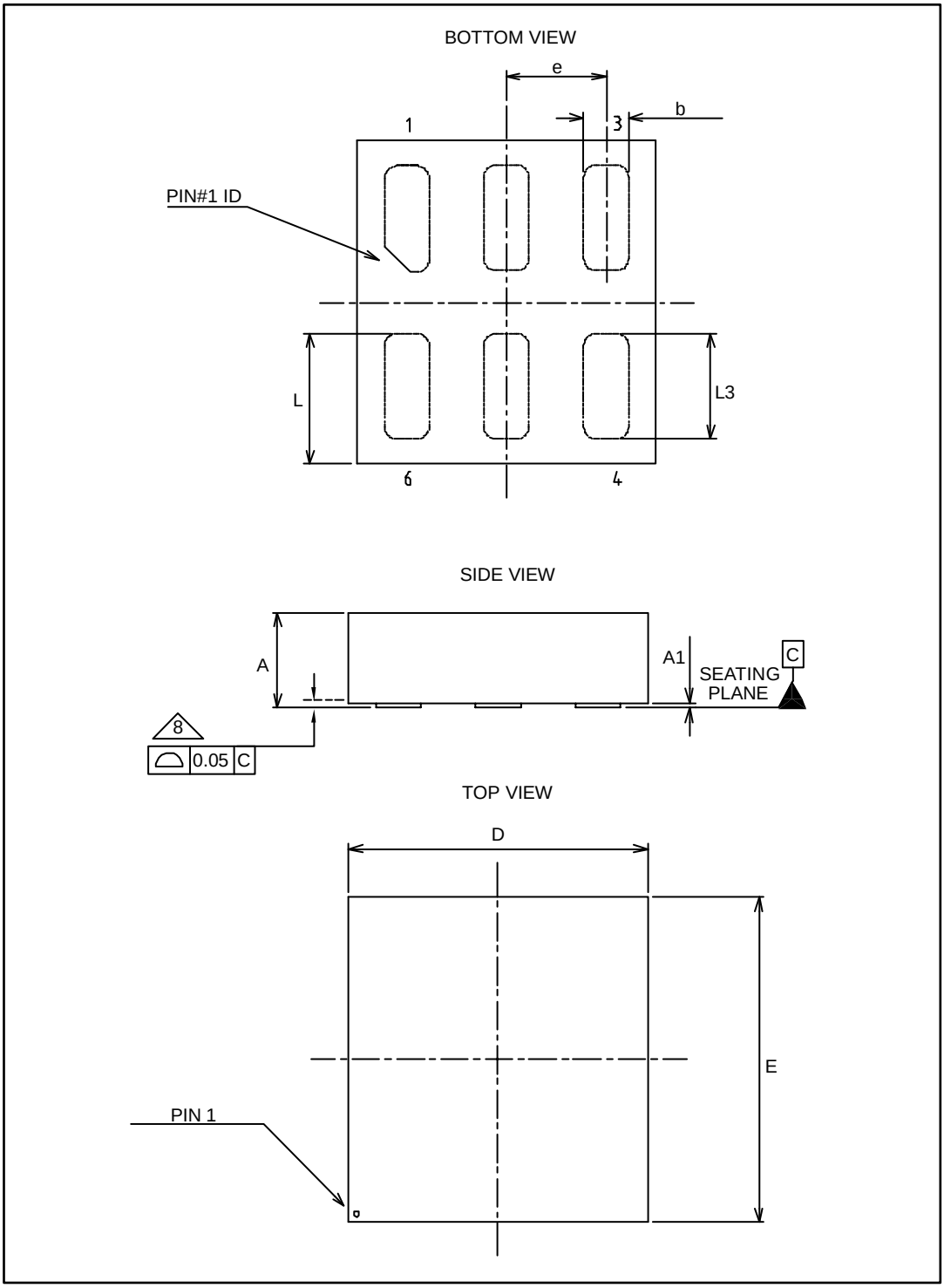

Table 8: DFN6 1.2x1.3 mechanical data

Ref	Dimensions					
	Millimeters			Inches		
	Min.	Typ.	Max.	Min.	Typ.	Max.
A	0.31	0.38	0.40	0.012	0.015	0.016
A1	0.00	0.02	0.05	0.000	0.001	0.002
b	0.15	0.18	0.25	0.006	0.007	0.010
c		0.05			0.002	
D		1.20			0.047	
E		1.30			0.051	
e		0.40			0.016	
L	0.475	0.525	0.575	0.019	0.021	0.023
L3	0.375	0.425	0.475	0.015	0.017	0.019

Figure 25: DFN6 1.2x1.3 recommended footprint

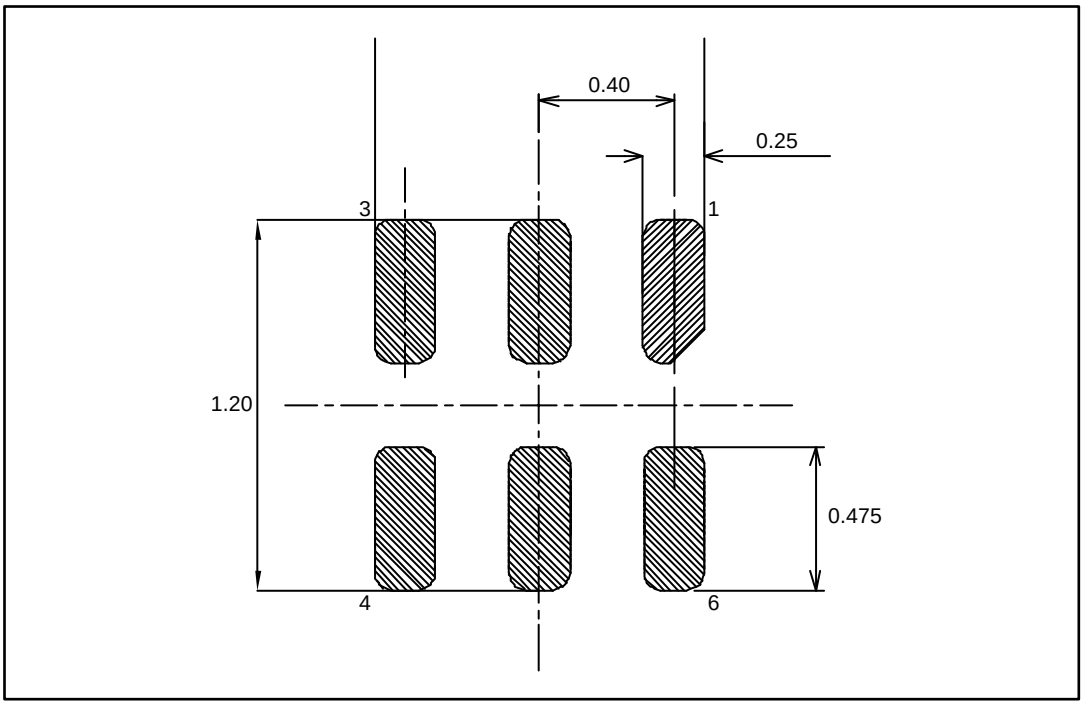

5.2 DFN8 2x2 package information

Figure 26: DFN8 2x2 package outline

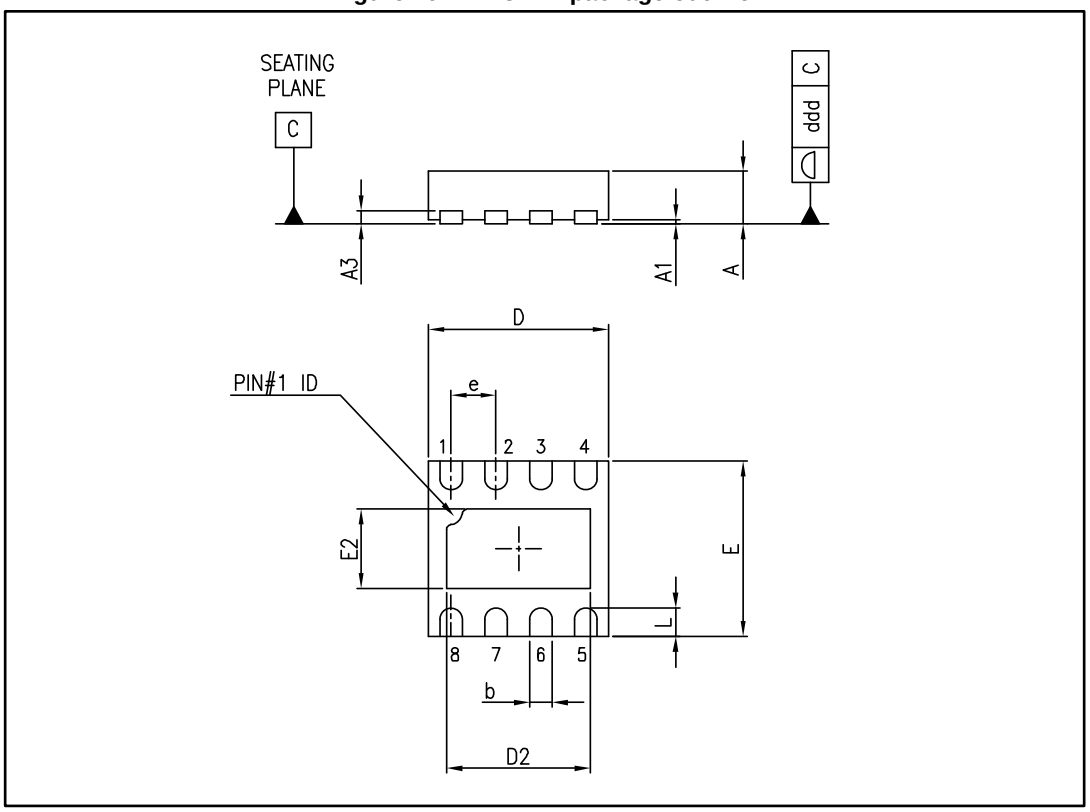

Table 9: DFN8 2x2 mechanical data

Ref.	Dimensions					
	Millimeters			Inches		
	Min.	Typ.	Max.	Min.	Typ.	Max.
A	0.51	0.55	0.60	0.020	0.022	0.024
A1			0.05			0.002
A3		0.15			0.006	
b	0.18	0.25	0.30	0.007	0.010	0.012
D	1.85	2.00	2.15	0.073	0.079	0.085
D2	1.45	1.60	1.70	0.057	0.063	0.067
E	1.85	2.00	2.15	0.073	0.079	0.085
E2	0.75	0.90	1.00	0.030	0.035	0.039
e		0.50			0.020	
L			0.425			0.017
ddd			0.08			0.003

Figure 27: DFN8 2x2 recommended footprint

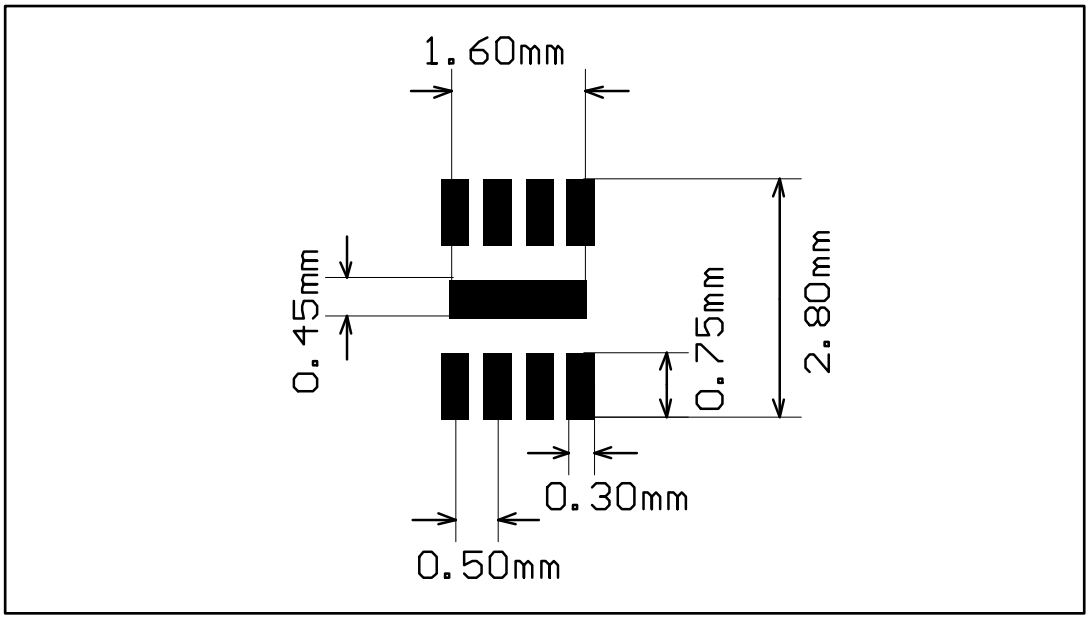

5.3 SC70-6 (or SOT323-6) package information

Figure 28: SC70-6 (or SOT323-6) package outline

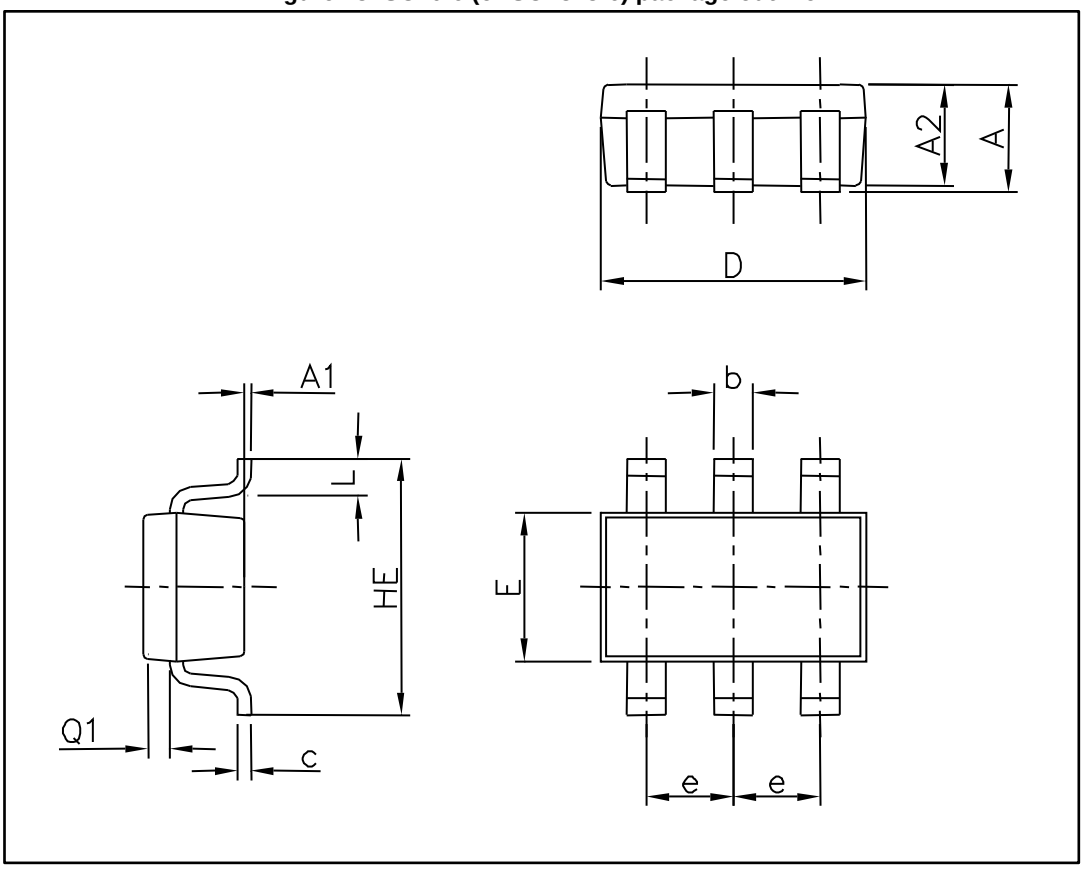

Table 10: SC70-6 (or SOT323-6) mechanical data

Ref	Dimensions					
	Millimeters			Inches		
	Min.	Typ.	Max.	Min.	Typ.	Max.
A	0.80		1.10	0.031		0.043
A1			0.10			0.004
A2	0.80		1.00	0.031		0.039
b	0.15		0.30	0.006		0.012
c	0.10		0.18	0.004		0.007
D	1.80		2.20	0.071		0.086
E	1.15		1.35	0.045		0.053
e		0.65			0.026	
HE	1.80		2.40	0.071		0.094
L	0.10		0.40	0.004		0.016
Q1	0.10		0.40	0.004		0.016

Figure 29: SC70-6 (or SOT323-6) recommended footprint

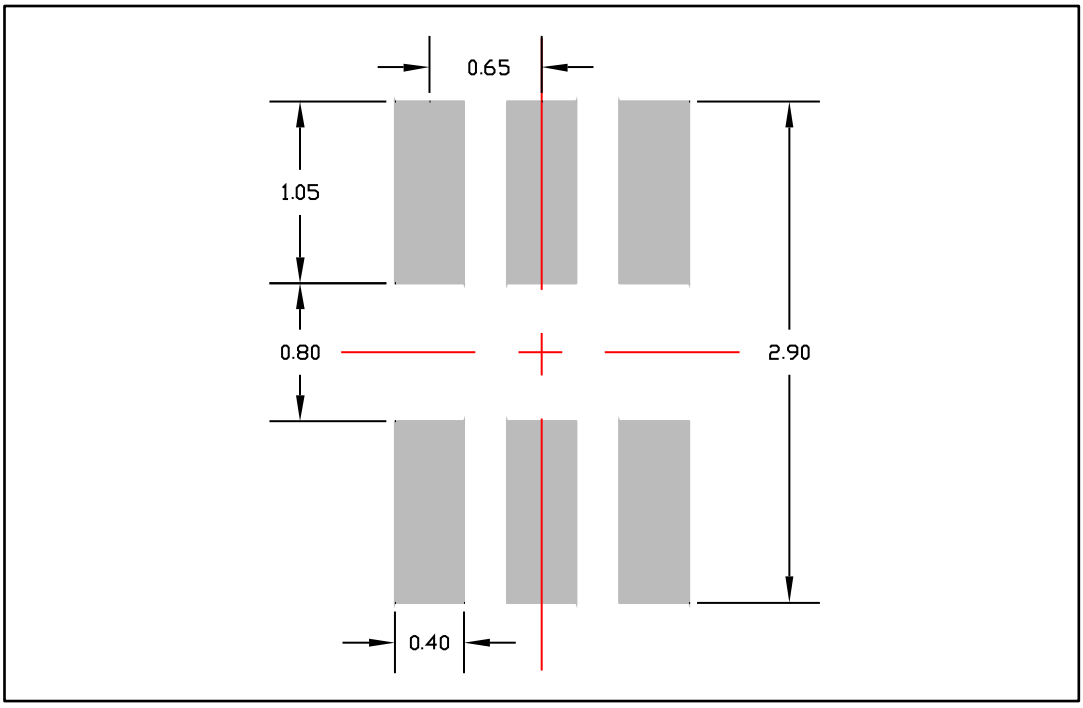

5.4 SOT23-6 package information

Figure 30: SOT23-6 package outline

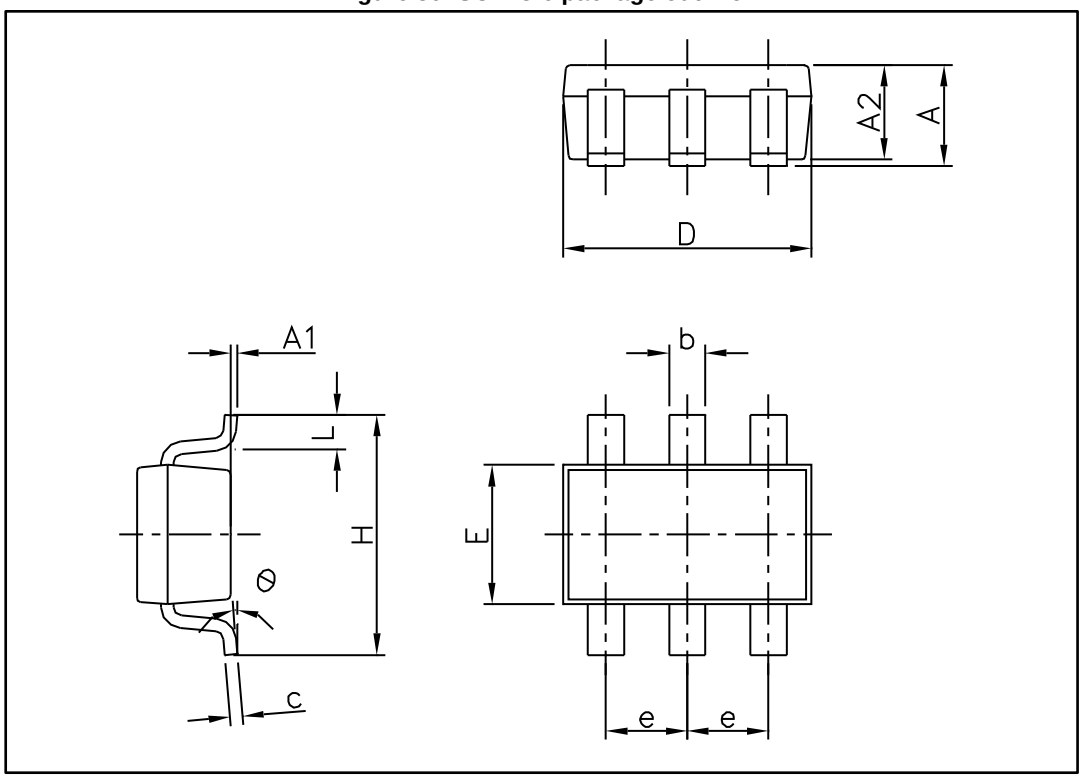

Table 11: SOT23-6 mechanical data

Ref.	Dimensions					
	Millimeters			Inches		
	Min.	Typ.	Max.	Min.	Typ.	Max.
A	0.90		1.45	0.035		0.057
A1			0.10			0.004
A2	0.90		1.30	0.035		0.051
b	0.35		0.50	0.013		0.019
c	0.09		0.20	0.003		0.008
D	2.80		3.05	0.110		0.120
E	1.50		1.75	0.060		0.069
e		0.95			0.037	
H	2.60		3.00	0.102		0.118
L	0.10		0.60	0.004		0.024
θ	0 °		10 °	0 °		10 °

5.5 SC70-5 (or SOT323-5) package information

Figure 31: SC70-5 (or SOT323-5) package outline

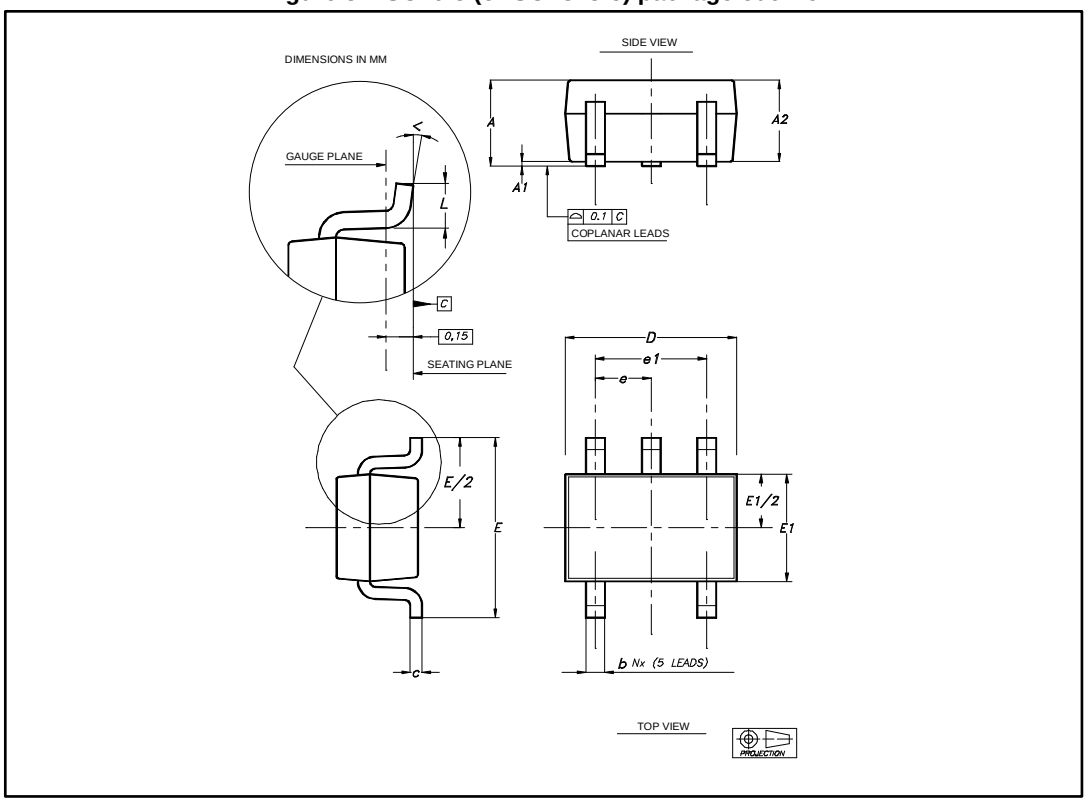

Table 12: SC70-5 (or SOT323-5) mechanical data

Ref.	Dimensions					
	Millimeters			Inches		
	Min.	Typ.	Max.	Min.	Typ.	Max.
A	0.80		1.10	0.032		0.043
A1			0.10			0.004
A2	0.80	0.90	1.00	0.032	0.035	0.039
b	0.15		0.30	0.006		0.012
c	0.10		0.22	0.004		0.009
D	1.80	2.00	2.20	0.071	0.079	0.087
E	1.80	2.10	2.40	0.071	0.083	0.094
E1	1.15	1.25	1.35	0.045	0.049	0.053
e		0.65			0.025	
e1		1.30			0.051	
L	0.26	0.36	0.46	0.010	0.014	0.018
<	0°		8°	0°		8°

5.6 SOT23-5 package information

Figure 32: SOT23-5 package outline

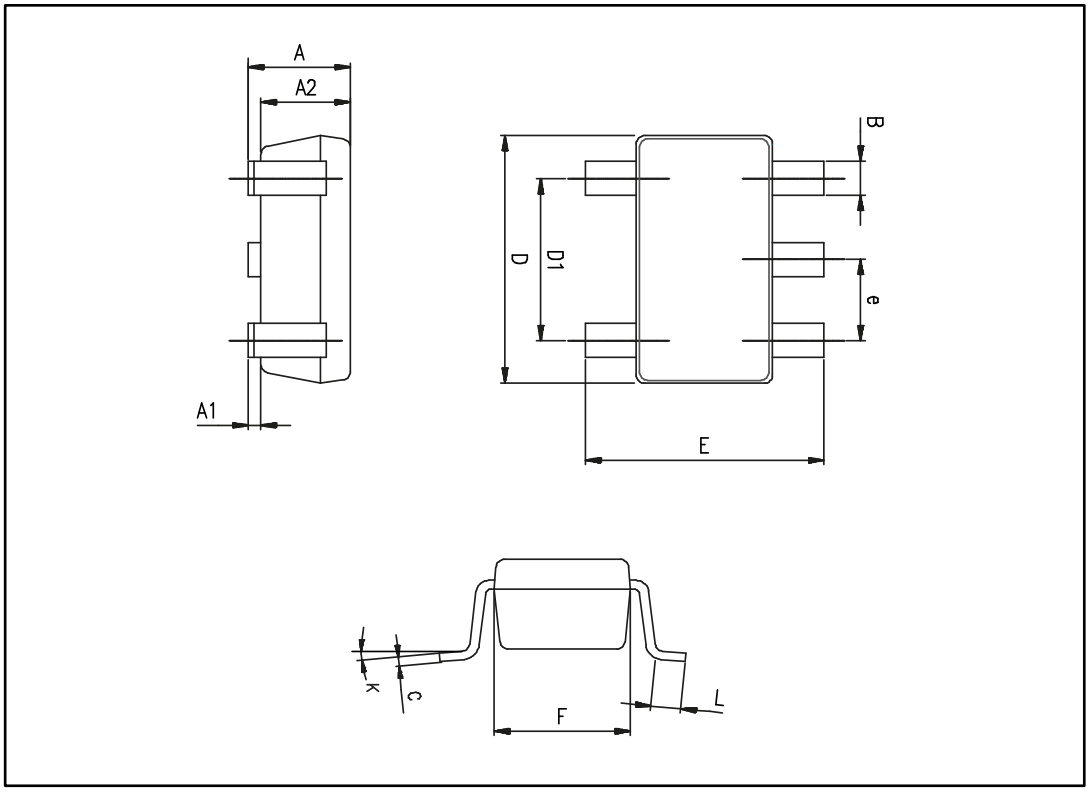

Table 13: SOT23-5 mechanical data

Ref.	Dimensions					
	Millimeters			Inches		
	Min.	Typ.	Max.	Min.	Typ.	Max.
A	0.90	1.20	1.45	0.035	0.047	0.057
A1			0.15			0.006
A2	0.90	1.05	1.30	0.035	0.041	0.051
B	0.35	0.40	0.50	0.014	0.016	0.020
C	0.09	0.15	0.20	0.004	0.006	0.008
D	2.80	2.90	3.00	0.110	0.114	0.118
D1		1.90			0.075	
e		0.95			0.037	
E	2.60	2.80	3.00	0.102	0.110	0.118
F	1.50	1.60	1.75	0.059	0.063	0.069
L	0.10	0.35	0.60	0.004	0.014	0.024
K	0 degrees		10 degrees	0 degrees		10 degrees

6 Ordering information

Table 14: Order codes

Order code	Temperature range	Package	Packing	Marking
TSV630IQ1T	-40 °C to 125 °C	DFN6 1.2x1.3 (1)	Tape and reel	K4
TSV630IQ2T		DFN8 2x2		K1A
TSV630ILT		SOT23-6		K108
TSV630ICT		SC70-6		K18
TSV631ILT		SOT23-5		K109
TSV631ICT		SC70-5		K19
TSV630AILT		SOT23-6		K141
TSV630AICT		SC70-6		K41
TSV631AILT		SOT23-5		K142
TSV631AICT		SC70-5		K42
TSV631IYLT (2)	-40 °C to 125 °C automotive grade	SOT23-5		K10C

Notes:

(1)Package available on request. Please contact your local sales office for further information.

(2)Qualified and characterized according to AEC Q100 and Q003 or equivalent, advanced screening according to AEC Q001 and Q002 or equivalent.

7 Revision history

Table 15: Document revision history

Date	Revision	Changes
19-Dec-2008	1	Initial release.
17-Aug-2009	2	Added root part numbers TSV630A and TSV631A on cover page.
13-Aug-2012	3	Corrected the “Equivalent input noise voltage” values in Table 3, Table 4, and Table 6. Updated Figure 16: "Noise vs. frequency".
22-Mar-2013	4	Features: added “automotive qualification” Added Related products Description: updated Updated titles of Figure 14 and Figure 15 Updated Section 4.4: "Shutdown function (TSV630)" Updated Table 13: "Order codes"
02-Oct-2013	5	Added DFN6 1.2 x 1.3 package details Table 3, Table 5, and Table 6: replaced DV_{io} with $\Delta V_{io}/\Delta T$. Figure 3: updated title Updated disclaimer
21-Nov-2014	6	Related products: updated Table 3, Table 4, Table 5, Table 6, and Table 7: updated some of the “conditions”. Figure 25: "DFN6 1.2x1.3 recommended footprint": updated Table 12: "SOT23-5 mechanical data": updated some of the “inches” dimensions.
01-Jul-2015	7	Table 3, Table 5, and Table 6: V_{OH} "min" values changed to "max" values.
20-Sep-2016	8	Added "on request" to DFN6 1.2x1.3 silhouette. Added DFN8 2x2 silhouette, pinout and package. *Table 1: "Absolute maximum ratings (AMR)"*: updated thermal resistance junction-to-ambient parameter for DFN8 2x2 package. *Table 14: "Order codes"*: added footnote concerning package availability to DFN6 1.2x1.3, added TSV630IQ2T.

IMPORTANT NOTICE – PLEASE READ CAREFULLY

STMicroelectronics NV and its subsidiaries ("ST") reserve the right to make changes, corrections, enhancements, modifications, and improvements to ST products and/or to this document at any time without notice. Purchasers should obtain the latest relevant information on ST products before placing orders. ST products are sold pursuant to ST's terms and conditions of sale in place at the time of order acknowledgement.

Purchasers are solely responsible for the choice, selection, and use of ST products and ST assumes no liability for application assistance or the design of Purchasers' products.

No license, express or implied, to any intellectual property right is granted by ST herein.

Resale of ST products with provisions different from the information set forth herein shall void any warranty granted by ST for such product.

ST and the ST logo are trademarks of ST. All other product or service names are the property of their respective owners.

Information in this document supersedes and replaces information previously supplied in any prior versions of this document.

© 2016 STMicroelectronics – All rights reserved