PLC-RSC-230AC/21HC/SO46/HI - Relay Module

1079402

https://www.phoenixcontact.com/gb/products/1079402

Please be informed that the data shown in this PDF document is generated from our online catalog. Please find the complete data in the user documentation. Our general terms of use for downloads are valid.

PLC-INTERFACE consisting of PLC-BSC.../21HC/SO46/HI basic terminal block with screw connection and plug-in miniature relay for high continuous current, 1 changeover contact, nominal input voltage of 230 V AC, with defined activation and deactivation thresholds

Commercial data

Item number	1079402
Packing unit	10 pc
Minimum order quantity	10 pc
Sales key	CK621A
Product key	CK621A
Catalog page	Page 393 (C-5-2019)
GTIN	4055626798936
Weight per piece (including packing)	75.87 g
Weight per piece (excluding packing)	63.06 g
Customs tariff number	85364900
Country of origin	DE

sales@prom-elec.com / ООО ПРОМЭЛЕКТРОНИКА

Technical data

Product properties

Product type	Relay Module
Product family	PLC-INTERFACE
Application	Filter to prevent interference
Operating mode	100% operating factor
Mechanical service life	3x 10^7 cycles

Insulation characteristics

Insulation	Basic insulation
	Safe isolation, reinforced insulation, and 6 kV between input circuit and output contact current paths

Insulation characteristics: Air clearances and creepage distances between the power circuits

Insulation	Basic insulation
	Safe isolation, reinforced insulation, and 6 kV between input circuit and output contact current paths
Overvoltage category	III
Pollution degree	2

Electrical properties

Maximum power dissipation for nominal condition	1.04 W
Test voltage (Winding/contact)	4 kV AC (50 Hz, 1 min., winding/contact)

Air clearances and creepage distances between the power circuits

Rated surge voltage	4 kV

Input data

Coil side

Nominal input voltage U_N	230 V AC
Input voltage range	190 V AC ... 264 V AC (20 °C)
Switch-on threshold	190 V AC
Switch-off threshold	170 V AC
Drive and function	monostable
Drive (polarity)	polarized
Typical input current at U_N	14 mA (50 Hz)
Input power dissipation for U_N	3 VA
Typical response time	10 ms
Typical release time	8 ms
Coil voltage	110 V DC
Protective circuit	Bridge rectifier
Input circuit	RC element with threshold value switch
Operating voltage display	Yellow LED

Output data

Switching

Contact switching type	1 changeover contact
Type of switch contact	Single contact
Contact material	AgNi
Maximum switching voltage	250 V AC/DC (The separating plate PLC-ATP should be installed for voltages larger than 250 V (L1, L2, L3) between identical terminal blocks in adjacent modules. Potential bridging is then carried out with FBST 8-PLC... or ...FBST 500...)
Minimum switching voltage	12 V (10 mA)
Limiting continuous current	10 A
	6 A (value applies to connections 12. If connections 12 are bridged, the normal value applies.)
Maximum inrush current	30 A (300 ms)
Min. switching current	10 mA (12 V)
Interrupting rating (ohmic load) max.	240 W (at 24 V DC)
	58 W (at 48 V DC)
	48 W (at 60 V DC)
	50 W (at 110 V DC)
	80 W (at 220 V DC)
	2500 VA (for 250 V AC)
Interrupting rating (ohmic load) max. bridged	144 W (for 24 V DC. Value applies to connections 12. If connections 12 are bridged, the normal value applies.)
	1500 VA (for 250 V AC. Value applies to connections 12. If connections 12 are bridged, the normal value applies.)
Switching capacity	2 A (at 24 V, DC13)
	0.2 A (at 110 V, DC13)
	0.2 A (at 250 V, DC13)
	6 A (at 24 V, AC15)
	6 A (at 120 V, AC15)
	6 A (at 250 V, AC15)

Connection data

Connection method	Screw connection
Stripping length	8 mm
Screw thread	M3
Conductor cross section rigid	0.14 mm² ... 2.5 mm²
Conductor cross section flexible	0.14 mm² ... 2.5 mm²
	0.2 mm² ... 2.5 mm² (Single ferrule)
	2x 0.5 mm² ... 1.5 mm² (TWIN ferrule)
Conductor cross section AWG	26 ... 14
Tightening torque	0.45 Nm ... 0.55 Nm (Usually these terminal blocks must be supported during conductor connection (held by one hand, supported on the housing))

Dimensions

Width	14 mm
Height	80 mm
Depth	94 mm

Material specifications

Color	gray (RAL 7042)
Flammability rating according to UL 94	V0 (Housing)

Environmental and real-life conditions

Ambient conditions

Degree of protection (Relay)	RT II (Relay)
Degree of protection (Relay base)	IP20 (Relay base)
Degree of protection (Installation location)	≥ IP54 (Installation location)
Ambient temperature (operation)	-40 °C ... 50 °C
Ambient temperature (storage/transport)	-40 °C ... 85 °C
Altitude	≤ 2000 m

Approvals

CE

Certificate	CE-compliant

UKCA

Certificate	UKCA-compliant

Shipbuilding approval

Certificate	TAE0000196

Corrosive gas test

Identification	ISA-S71.04. G3 Harsh Group
	EN 60068-2-60

DNV GL data

Temperature	D
Humidity	A
Vibration	B/C
EMC	B
Enclosure	Required protection according to the Rules shall be provided upon installation on board

EMC data

Low Voltage Directive	Conformance with Low Voltage Directive
Electromagnetic compatibility	Conformance with EMC directive

Standards and regulations

Air clearances and creepage distances between the power circuits

Standards/regulations	IEC 60947-5-1

Mounting

Mounting type	DIN rail mounting
Assembly instructions	in rows with zero spacing
Mounting position	any

Drawings

Diagram

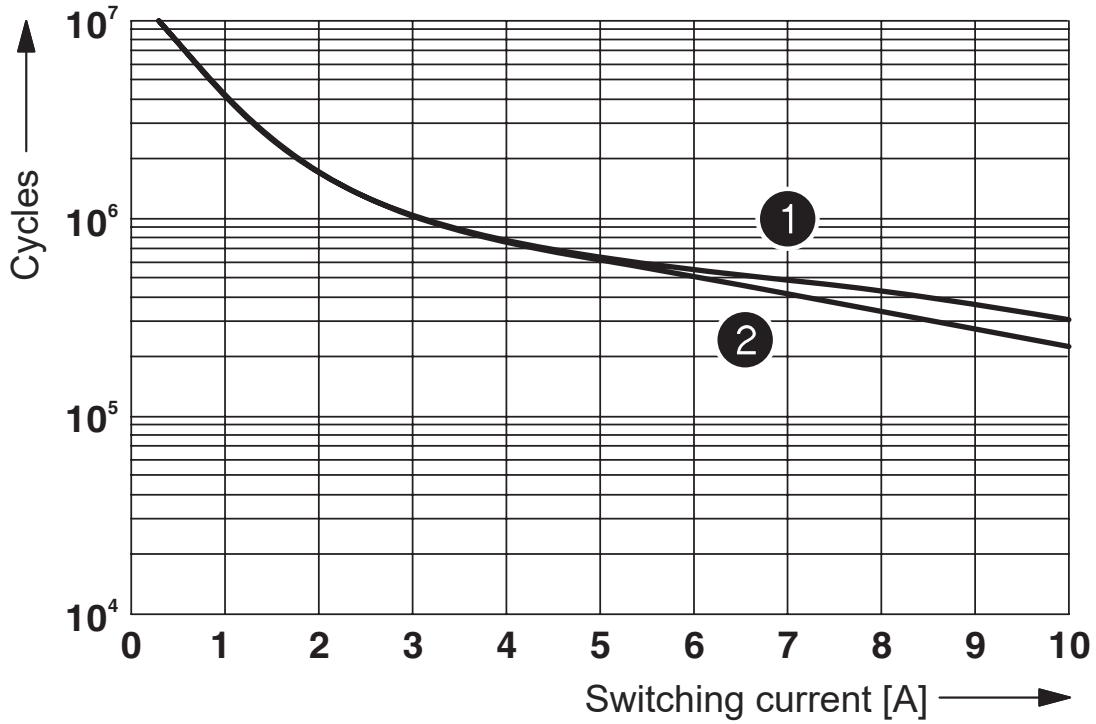

1 250 V AC, ohmic load (DC coils)
2 250 V AC, ohmic load (AC coils)

Electrical service life

Diagram

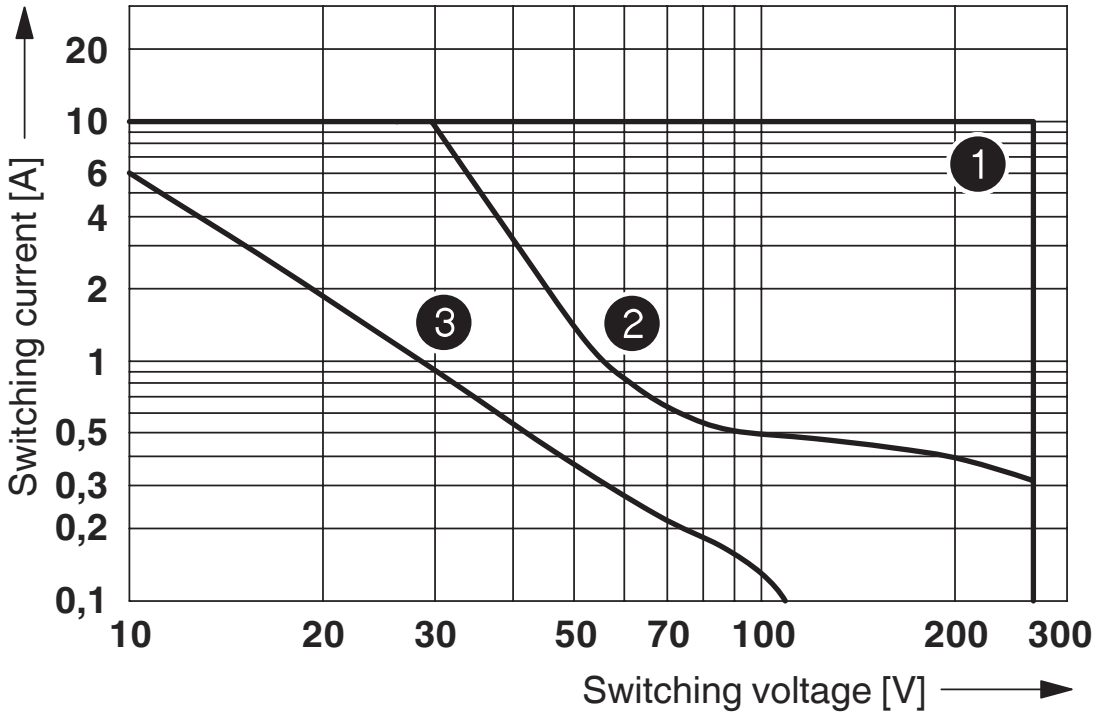

❶ AC, ohmic load
❷ DC, ohmic load
❸ DC, L/R = 40 ms

Interrupting rating

Circuit diagram

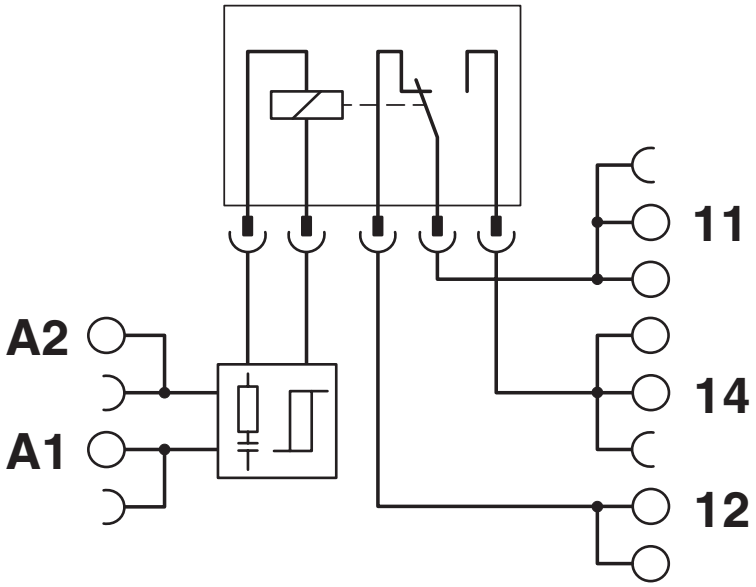

Diagram

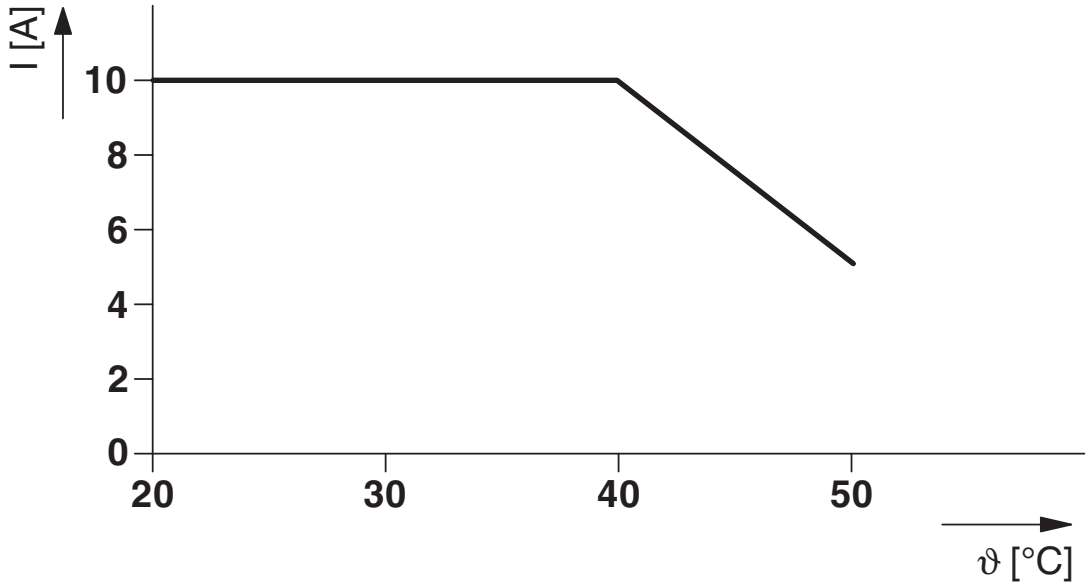

Derating curve

Diagram

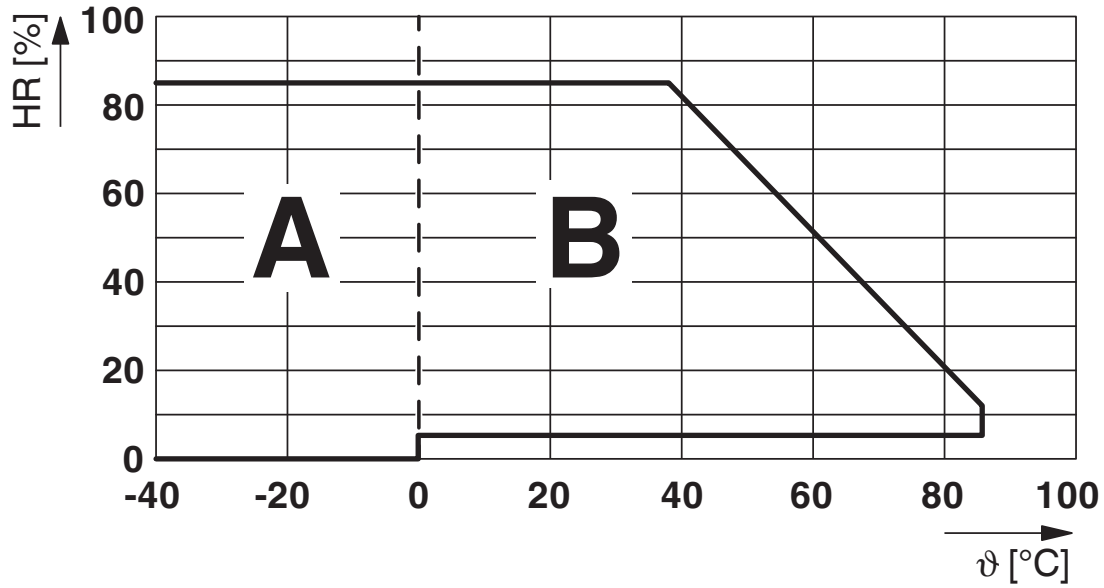

Permissible humidity for operation and storage.
The maximum permissible ambient temperature as specified in the data sheet must be observed.

Area A: Ice buildup at ambient temperatures ≤ 0°C must be prevented
Area B: Condensation at ambient temperatures > 0°C must be prevented

On 30 full days that are naturally distributed across an entire year, a humidity level of 95% is permissible at an ambient temperature ≤ 25°C.

Diagram

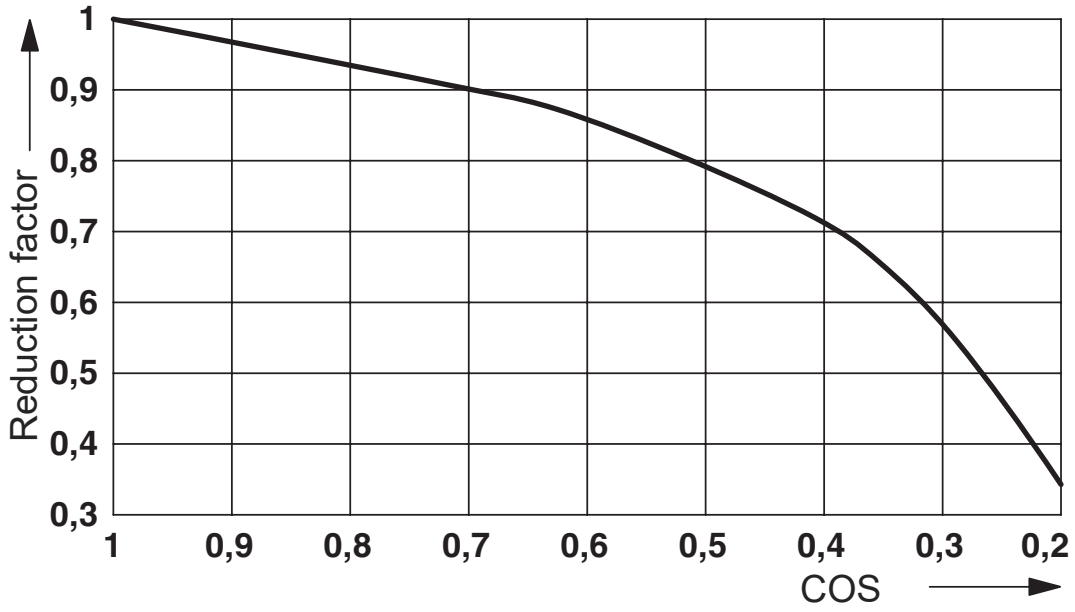

Service life reduction factor

Application drawing

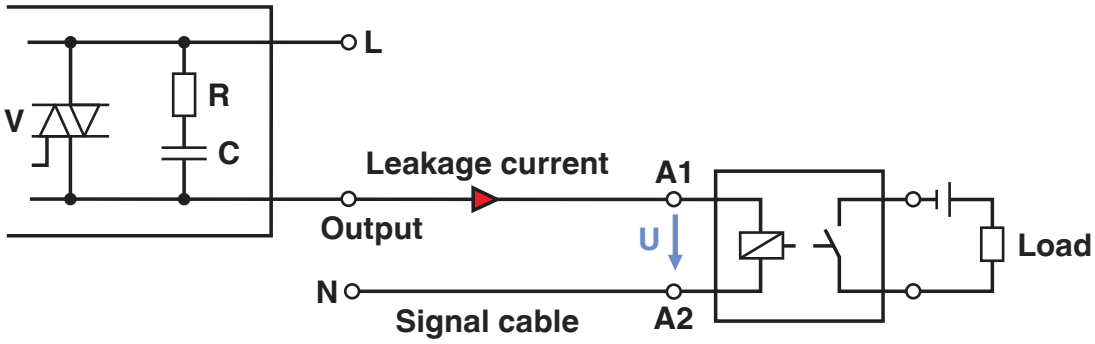

Occurrence of interference signals
Scenario 1: controller - AC output card

Application drawing

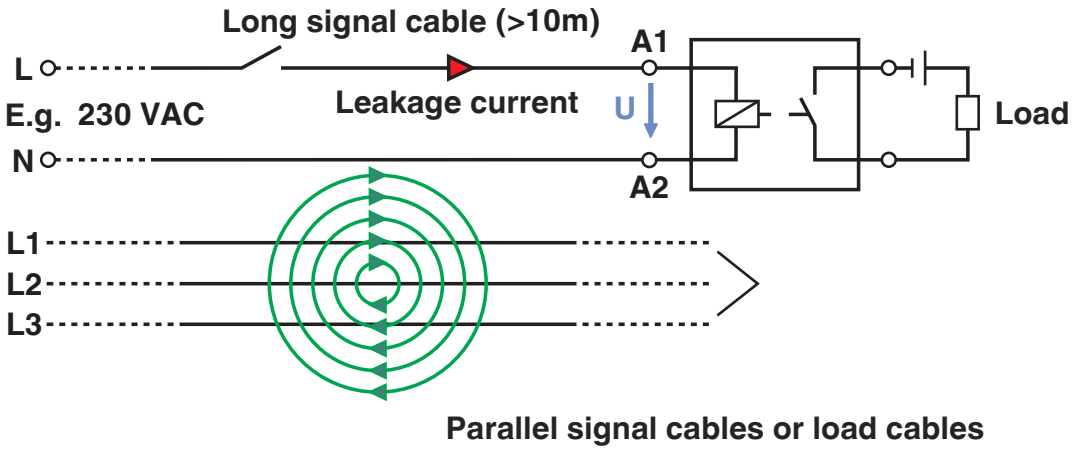

Occurrence of interference signals
Scenario 2: long signal cables

Approvals

To download certificates, visit the product detail page: https://www.phoenixcontact.com/gb/products/1079402

cUL Recognized
Approval ID: FILE E 238705

UL Recognized
Approval ID: FILE E 238705

EAC
Approval ID: TR_TS_D_00573_c

DNV GL
Approval ID: TAE0000196

EAC
Approval ID: RU*C-DE.*08.B.00010

UL Listed
Approval ID: FILE E 172140

cUL Listed
Approval ID: FILE E 172140

cULus Listed
Approval ID: E140324

cULus Recognized

cULus Listed

Classifications

ECLASS

ECLASS-11.0	27371601
ECLASS-12.0	27371601
ECLASS-13.0	27371601

ETIM

ETIM 9.0	EC001437

UNSPSC

UNSPSC 21.0	39122300

Environmental product compliance

REACh SVHC	Lead 7439-92-1

China RoHS	Environmentally Friendly Use Period = 50 years
	For information on hazardous substances, refer to the manufacturer's declaration available under "Downloads"

Accessories

Note: Applying some accessories below might limit this product.

FBST 500-PLC BU - Continuous plug-in bridge

2966692

https://www.phoenixcontact.com/gb/products/2966692

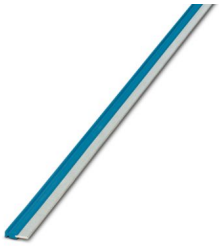

Continuous plug-in bridge, length: 500 mm, color: blue

Max. current carrying capacity: 32 A

FBST 500-PLC GY - Continuous plug-in bridge

2966838

https://www.phoenixcontact.com/gb/products/2966838

Continuous plug-in bridge, length: 500 mm, color: gray

Max. current carrying capacity: 32 A

FBST 6-PLC RD - Single plug-in bridge

2966236

https://www.phoenixcontact.com/gb/products/2966236

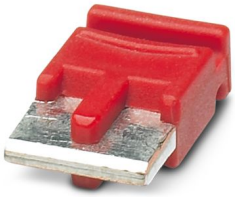

Single plug-in bridge, number of positions: 2, length: 6 mm, color: red

Max. current carrying capacity: 6 A

FBST 6-PLC BU - Single plug-in bridge

2966812

https://www.phoenixcontact.com/gb/products/2966812

Single plug-in bridge, number of positions: 2, length: 6 mm, color: blue

Max. current carrying capacity: 6 A

FBST 6-PLC GY - Single plug-in bridge

2966825

https://www.phoenixcontact.com/gb/products/2966825

Single plug-in bridge, number of positions: 2, length: 6 mm, color: gray

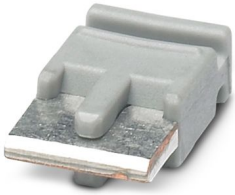

Max. current carrying capacity: 6 A

FBST 8-PLC GY - Single plug-in bridge

2967688

https://www.phoenixcontact.com/gb/products/2967688

Single plug-in bridge, number of positions: 2, length: 8 mm, color: gray

Max. current carrying capacity: 6 A

FBST 14-PLC BK - Single plug-in bridge

2967691

https://www.phoenixcontact.com/gb/products/2967691

Single plug-in bridge, number of positions: 2, length: 14 mm, color: black

Max. current carrying capacity: 10 A

ZB 10:UNBEDRUCKT - Zack marker strip

1053001

https://www.phoenixcontact.com/gb/products/1053001

Zack marker strip, Strip, white, unlabeled, can be labeled with: PLOTMARK, CMS-P1-PLOTTER, mounting type: snapped, for terminal block width: 10.2 mm, lettering field size: 10.5 x 10.15 mm, Number of individual labels: 10

ZB 10 CUS - Zack marker strip

0824941

https://www.phoenixcontact.com/gb/products/0824941

Zack marker strip, can be ordered: Strip, white, labeled according to customer specifications, mounting type: snap into tall marker groove, for terminal block width: 10.2 mm, lettering field size: 10,15 x 10,5 mm, Number of individual labels: 10

ZB10,LGS:FORTL.ZAHLEN - Zack marker strip

1053014

https://www.phoenixcontact.com/gb/products/1053014

Zack marker strip, Strip, white, labeled, can be labeled with: CMS-P1-PLOTTER, printed horizontally: consecutive numbers 1 ... 10, 11 ... 20, etc. up to 91 ... 100, mounting type: snapped, for terminal block width: 10.2 mm, lettering field size: 10,15 x 10,5 mm, Number of individual labels: 10

ZB10,QR:FORTL.ZAHLEN - Zack marker strip

1053027

https://www.phoenixcontact.com/gb/products/1053027

Zack marker strip, Strip, white, labeled, can be labeled with: CMS-P1-PLOTTER, Printed vertically: consecutive numbers 1 ... 10, 11 ... 20, etc. up to 91 ... 100, mounting type: snapped, for terminal block width: 10.2 mm, lettering field size: 10,15 x 10,5 mm, Number of individual labels: 10

ZB10,LGS:L1-N,PE - Marker for terminal blocks

1053412

https://www.phoenixcontact.com/gb/products/1053412

Marker for terminal blocks, Strip, white, labeled, can be labeled with: CMS-P1-PLOTTER, horizontal: L1, L2, L3, N, PE, L1, L2, L3, N, PE, mounting type: snapped, for terminal block width: 10.2 mm, lettering field size: 10,15 x 10,5 mm, Number of individual labels: 10

ZB10,LGS:U-N - Marker for terminal blocks

1053438

https://www.phoenixcontact.com/gb/products/1053438

Marker for terminal blocks, Strip, white, labeled, can be labeled with: CMS-P1-PLOTTER, horizontal: U, V, W, N, GND, U, V, W, N, GND, mounting type: snapped, for terminal block width: 10.2 mm, lettering field size: 10,15 x 10,5 mm, Number of individual labels: 10

UC-TM 10 - Marker for terminal blocks

0818069

https://www.phoenixcontact.com/gb/products/0818069

Marker for terminal blocks, Sheet, white, unlabeled, can be labeled with: BLUEMARK ID COLOR, BLUEMARK ID, BLUEMARK CLED, PLOTMARK, CMS-P1-PLOTTER, mounting type: snapped, for terminal block width: 10.2 mm, lettering field size: 9.6 x 10.5 mm, Number of individual labels: 48

UC-TM 10 CUS - Marker for terminal blocks

0824605

https://www.phoenixcontact.com/gb/products/0824605

Marker for terminal blocks, can be ordered: by sheet, white, labeled according to customer specifications, mounting type: snap into tall marker groove, for terminal block width: 10.2 mm, lettering field size: 9.6 x 10.5 mm, Number of individual labels: 48

UCT-TM 10 - Marker for terminal blocks

0829142

https://www.phoenixcontact.com/gb/products/0829142

Marker for terminal blocks, Sheet, white, unlabeled, can be labeled with: TOPMARK NEO, TOPMARK LASER, BLUEMARK ID COLOR, BLUEMARK ID, BLUEMARK CLED, THERMOMARK PRIME, THERMOMARK CARD 2.0, THERMOMARK CARD, mounting type: snapped, for terminal block width: 10.2 mm, lettering field size: 8.9 x 9.6 mm, Number of individual labels: 36

UCT-TM 10 CUS - Marker for terminal blocks

0829623

https://www.phoenixcontact.com/gb/products/0829623

Marker for terminal blocks, can be ordered: by sheet, white, labeled according to customer specifications, mounting type: snap into tall marker groove, for terminal block width: 10.2 mm, lettering field size: 8.9 x 9.6 mm, Number of individual labels: 36

ZB 12:UNPRINTED - Zack marker strip

0812120

https://www.phoenixcontact.com/gb/products/0812120

Zack marker strip, Strip, white, unlabeled, can be labeled with: PLOTMARK, CMS-P1-PLOTTER, mounting type: snapped, for terminal block width: 12.2 mm, lettering field size: 12 x 10.5 mm, Number of individual labels: 5

ZB 12 CUS - Zack marker strip

0824942

https://www.phoenixcontact.com/gb/products/0824942

Zack marker strip, can be ordered: Strip, white, labeled according to customer specifications, mounting type: snap into tall marker groove, for terminal block width: 12.2 mm, lettering field size: 10.5 x 12.15 mm, Number of individual labels: 5

ZB 12,LGS:L1-N,PE - Zack marker strip

0812146

https://www.phoenixcontact.com/gb/products/0812146

Zack marker strip, Strip, white, labeled, printed horizontally: L1, L2, L3, N, PE, mounting type: snapped, for terminal block width: 12.2 mm, lettering field size: 10.5 x 12.15 mm, Number of individual labels: 5

UC-TM 12 - Marker for terminal blocks

0819194

https://www.phoenixcontact.com/gb/products/0819194

Marker for terminal blocks, Sheet, white, unlabeled, can be labeled with: BLUEMARK ID COLOR, BLUEMARK ID, BLUEMARK CLED, PLOTMARK, CMS-P1-PLOTTER, mounting type: snapped, for terminal block width: 12 mm, lettering field size: 11.45 x 10.5 mm, Number of individual labels: 40

UC-TM 12 CUS - Marker for terminal blocks

0824613

https://www.phoenixcontact.com/gb/products/0824613

Marker for terminal blocks, can be ordered: by sheet, white, labeled according to customer specifications, mounting type: snap into tall marker groove, for terminal block width: 12 mm, lettering field size: 11.45 x 10.5 mm, Number of individual labels: 40

UCT-TM 12 - Marker for terminal blocks

0829144

https://www.phoenixcontact.com/gb/products/0829144

Marker for terminal blocks, Sheet, white, unlabeled, can be labeled with: TOPMARK NEO, TOPMARK LASER, BLUEMARK ID COLOR, BLUEMARK ID, BLUEMARK CLED, THERMOMARK PRIME, THERMOMARK CARD 2.0, THERMOMARK CARD, mounting type: snapped, for terminal block width: 12 mm, lettering field size: 10.8 x 9.6 mm, Number of individual labels: 30

UCT-TM 12 CUS - Marker for terminal blocks

0829630

https://www.phoenixcontact.com/gb/products/0829630

Marker for terminal blocks, can be ordered: by sheet, white, labeled according to customer specifications, mounting type: snap into tall marker groove, for terminal block width: 12 mm, lettering field size: 10.8 x 9.6 mm, Number of individual labels: 30

NS 35/ 7,5 PERF 2000MM - DIN rail perforated

0801733

https://www.phoenixcontact.com/gb/products/0801733

DIN rail perforated, Pack of 25 (50 m), acc. to EN 60715, material: Steel, galvanized, passivated with a thick layer, Standard profile, color: silver

NS 35/ 7,5 UNPERF 2000MM - DIN rail, unperforated

0801681

https://www.phoenixcontact.com/gb/products/0801681

DIN rail, unperforated, Pack of 25 (50 m), acc. to EN 60715, material: Steel, galvanized, passivated with a thick layer, Standard profile, color: silver

NS 35/ 7,5 WH PERF 2000MM - DIN rail perforated

1204119

https://www.phoenixcontact.com/gb/products/1204119

DIN rail perforated, Pack of 25 (50 m), acc. to EN 60715, material: Steel, Galvanized, white passivated, Standard profile, color: silver

NS 35/ 7,5 WH UNPERF 2000MM-VPE 10 - DIN rail, unperforated

1204122

https://www.phoenixcontact.com/gb/products/1204122

DIN rail, unperforated, Pack of 10 (20 m), acc. to EN 60715, material: Steel, Galvanized, white passivated, Standard profile, color: silver

NS 35/ 7,5 AL UNPERF 2000MM - DIN rail, unperforated

0801704

https://www.phoenixcontact.com/gb/products/0801704

DIN rail, unperforated, Pack of 25 (50 m), acc. to EN 60715, material: Aluminum, uncoated, Standard profile, color: silver

NS 35/ 7,5 ZN PERF 2000MM - DIN rail perforated

1206421

https://www.phoenixcontact.com/gb/products/1206421

DIN rail perforated, Pack of 25 (50 m), acc. to EN 60715, material: Steel, galvanized, Standard profile, color: silver

NS 35/ 7,5 ZN UNPERF 2000MM - DIN rail, unperforated

1206434

https://www.phoenixcontact.com/gb/products/1206434

DIN rail, unperforated, Pack of 25 (50 m), acc. to EN 60715, material: Steel, galvanized, Standard profile, color: silver

NS 35/ 7,5 CU UNPERF 2000MM-VPE 10 - DIN rail, unperforated

0801762

https://www.phoenixcontact.com/gb/products/0801762

DIN rail, unperforated, Pack of 10 (20 m), acc. to EN 60715, material: Copper, uncoated, Standard profile, color: copper-colored

NS 35/ 7,5 CAP - End cap

1206560

https://www.phoenixcontact.com/gb/products/1206560

DIN rail end piece, for DIN rail NS 35/7.5

NS 35/15 PERF 2000MM - DIN rail perforated

1201730

https://www.phoenixcontact.com/gb/products/1201730

DIN rail perforated, Pack of 25 (50 m), similar to EN 60715, material: Steel, galvanized, passivated with a thick layer, Standard profile, color: silver

NS 35/15 UNPERF 2000MM - DIN rail, unperforated

1201714

https://www.phoenixcontact.com/gb/products/1201714

DIN rail, unperforated, Pack of 25 (50 m), similar to EN 60715, material: Steel, galvanized, passivated with a thick layer, Standard profile, color: silver

NS 35/15 WH PERF 2000MM - DIN rail perforated

0806602

https://www.phoenixcontact.com/gb/products/0806602

DIN rail perforated, Pack of 25 (50 m), similar to EN 60715, material: Steel, Galvanized, white passivated, Standard profile, color: white

NS 35/15 WH UNPERF 2000MM-VPE 10 - DIN rail, unperforated

1204135

https://www.phoenixcontact.com/gb/products/1204135

DIN rail, unperforated, Pack of 10 (20 m), similar to EN 60715, material: Steel, Galvanized, white passivated, Standard profile, color: silver

NS 35/15 AL UNPERF 2000MM - DIN rail, unperforated

1201756

https://www.phoenixcontact.com/gb/products/1201756

DIN rail, unperforated, similar to EN 60715, material: Aluminum, uncoated, Standard profile, color: silver

NS 35/15 ZN PERF 2000MM - DIN rail perforated

1206599

https://www.phoenixcontact.com/gb/products/1206599

DIN rail perforated, Pack of 25 (50 m), similar to EN 60715, material: Steel, galvanized, Standard profile, color: silver

NS 35/15 ZN UNPERF 2000MM - DIN rail, unperforated

1206586

https://www.phoenixcontact.com/gb/products/1206586

DIN rail, unperforated, Pack of 25 (50 m), similar to EN 60715, material: Steel, galvanized, Standard profile, color: silver

NS 35/15 CU UNPERF 2000MM-VPE 10 - DIN rail, unperforated

1201895

https://www.phoenixcontact.com/gb/products/1201895

DIN rail, unperforated, Pack of 10 (20 m), similar to EN 60715, material: Copper, uncoated, Standard profile, color: copper-colored

NS 35/15 CAP - End cap

1206573

https://www.phoenixcontact.com/gb/products/1206573

DIN rail end piece, for DIN rail NS 35/15

NS 35/15-2,3 UNPERF 2000MM-VPE 10 - DIN rail, unperforated

1201798

https://www.phoenixcontact.com/gb/products/1201798

DIN rail, unperforated, Pack of 10 (20 m), acc. to EN 60715, material: Steel, galvanized, passivated with a thick layer, Standard profile 2.3 mm, color: silver

PLC-ATP BK - Separating plate

2966841

https://www.phoenixcontact.com/gb/products/2966841

Separating plate, 2 mm thick, required at the start and end of a PLC terminal strip. Furthermore, it is used for: visual separation of groups, safe isolation of different voltages of neighboring PLC relays in acc. with DIN VDE 0106-101, isolation

PLC-ESK GY - Power terminal block

2966508

https://www.phoenixcontact.com/gb/products/2966508

Power terminal block, for the input of up to four potentials, for mounting on NS 35/7.5

SZF 1-0,6X3,5 - Screwdriver

1204517

https://www.phoenixcontact.com/gb/products/1204517

Actuation tool, for ST terminal blocks, also suitable for use as a bladed screwdriver, size: 0.6 x 3.5 x 100 mm, 2-component grip, with non-slip grip

REL-MR-110DC/21HC - Single relay

2961338

https://www.phoenixcontact.com/gb/products/2961338

Plug-in miniature power relay, with power contact for high continuous currents, 1 changeover contact, input voltage 110 V DC

Phoenix Contact 2024 © - all rights reserved
https://www.phoenixcontact.com

PHOENIX CONTACT Ltd
Halesfield 13, Telford
Shropshire, TF7 4PG
01952 681700
info@phoenixcontact.co.uk