THIS DRAWING IS UNPUBLISHED. RELEASED FOR PUBLICATION 20
© COPYRIGHT 20 BY TYCO ELECTRONICS CORPORATION, ALL RIGHTS RESERVED.

LOC	DIST
FT	0

REVISIONS

P	LTR	DESCRIPTION	DATE	DWN	APVD
	C	REVISED PER 0G3B-0326-01	23JUL2001	EZ	DB
	D	REVISED EC 0G3B-0191-03	30APR2003	SW	CR

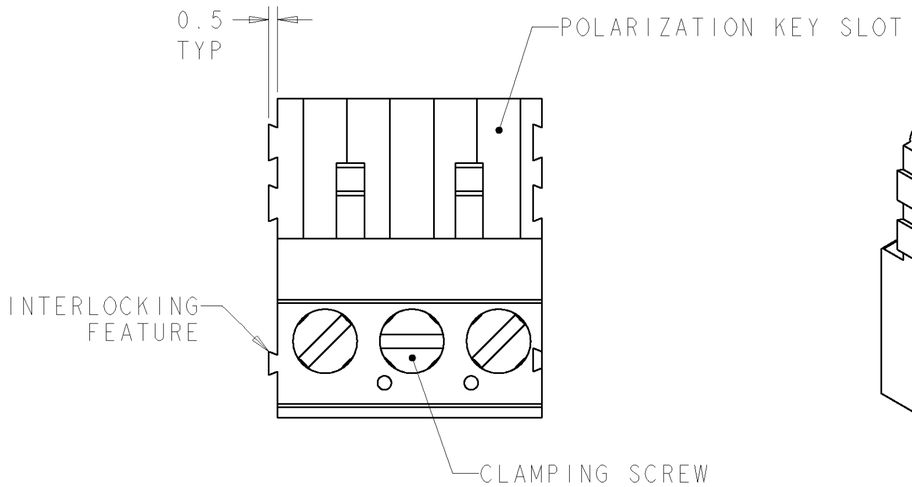

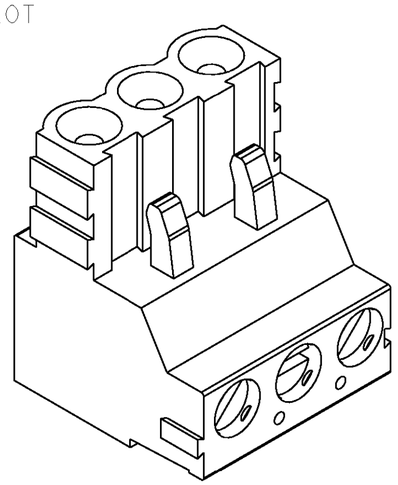

282807-3 AS SHOWN

1. MATERIALS AND FINISH
   HOUSING: PA 6-6, UL 94-V0, COLOR GREEN.
   CLAMP: BRASS, NICKEL PLATED.
   CONTACT SPRING: PHOSPHOR BRONZE, TIN PLATED.
   CLAMPING SCREW: M3, BRASS, NICKEL PLATED.
2. END-TO-END STACKABLE W/INTERLOCK WITHOUT LOSS OF CENTERLINE SPACING.
3. WIRE SIZE RANGE
   SOLID WIRE: 0,03-2,5mm (13 AWG).
   STRANDED WIRE: 0,03-1,5mm (15 AWG).
4. RECOGNIZED UNDER THE COMPONENT PROGRAM OF UNDERWRITERS LABORATORIES INC.FILE N° E60677
5. IMQ CERTIFICATE WITH SURVEILLANCE IN CONFORMITY WITH IEC 998-1/998-2-1.
6. NOT CUMULATIVE TOLERANCE.
7. CHARACTERS INK STAMPED WHITE.

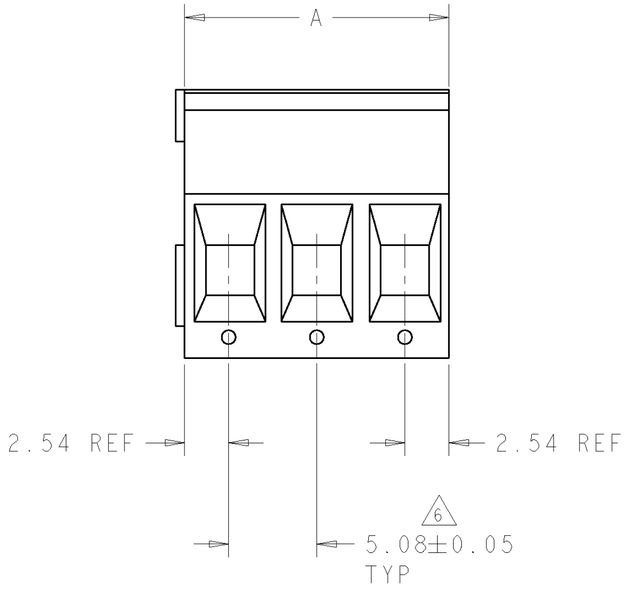

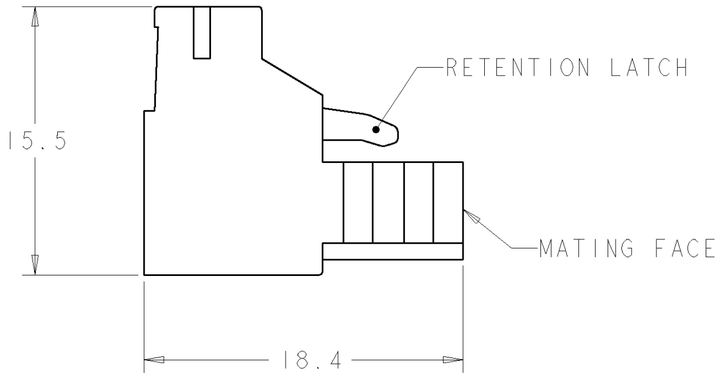

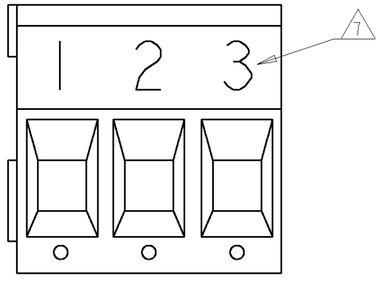

DETAIL Z

DETAIL Z	15.24	3	282807-5
-	20.32	4	282807-4
-	15.24	3	282807-3
-	10.16	2	282807-2
MARKING	L	NO OF POSN	PART NUMBER

THIS DRAWING IS A CONTROLLED DOCUMENT FOR TYCO ELECTRONICS CORPORATION. IT IS SUBJECT TO CHANGE AND THE CONTROLLING ENGINEERING ORGANIZATION SHOULD BE CONTACTED FOR THE LATEST REVISION.

DIMENSIONS: mm

TOLERANCES UNLESS OTHERWISE SPECIFIED:
0 PLC ±-
1 PLC ±.2
2 PLC ±.25
3 PLC ±-
4 PLC ±-
ANGLES ±2

MATERIAL 1 -
FINISH 1 -

DWN 23JUL2001 E. ZANOLINI
CHK 23JUL2001 D. BIEVENOUR
APVD 23JUL2001 D.BIEVENOUR
PRODUCT SPEC 108-20166
APPLICATION SPEC 114-20079
WEIGHT -

BUCHANAN
Tyco Electronics
Harrisburg, PA 17105-3608

NAME
TERMINAL BLOCK PLUG
STACKING W/INTERLOCK, 5.08mm PITCH
-

SIZE	CAGE CODE	DRAWING NO	RESTRICTED TO
A2	00779	C-282807	-

CUSTOMER DRAWING
SCALE 3:1 SHEET 1 OF 1 REV D

AMP 1471-9 REV 31MAR2000

Pro/ENGINEER DRAWING

sales@prom-elec.com / ООО ПРОМЭЛЕКТРОНИКА