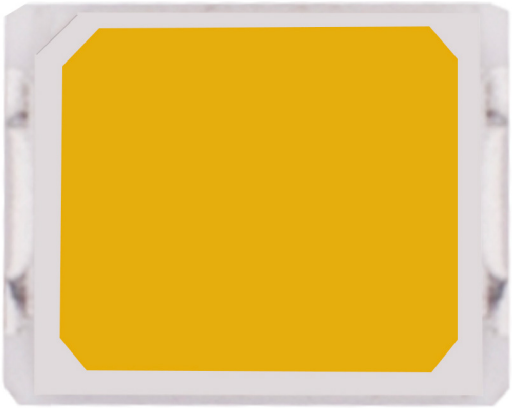

Bridgelux® SMD 2835 0.2W 3V

Product Data Sheet DS503

BXFN-27G|30G | 35G | 40G| 50G| 57G| 65G

Introduction

SMD 2835

Features

- Industry-standard 2835 footprint
- 7 bin color control
- Enables3- and 6-step MacAdam ellipse custom binning kits
- RoHS compliant and lead free
- Multiple CCT configurations for a wide range of lighting applications

Benefits

- Lower operating and manufacturing cost
- Ease of design and rapid go-to-market
- Uniform, consistent white light
- Reliable and constant white point
- Compliant with environmental standards
- Design flexibility

Pb free RoHS

Contents

Product Feature Map	2
Product Nomenclature	2
Product Test Conditions	2
Product Selection Guide	3
Performance at Commonly Used Drive Currents	4
Electrical Characteristics	5
Absolute Maximum Ratings	6
Product Bin Definitions	7
Performance Curves	10
Typical Radiation Pattern	13
Typical Color Spectrum	14
Mechanical Dimensions	15
Reliability	16
Reflow Characteristics	17
Packaging	18
Design Resources	20
Precautions	20
Disclaimers	20
About Bridgelux	21

Product Feature Map

Bridgelux SMD LED products come in industry standard package sizes and follow ANSI binning standards. These LEDs are optimized for cost and performance, helping to ensure highly competitive system lumen per dollar performance while addressing the stringent efficacy and reliability standards required for modern lighting applications.

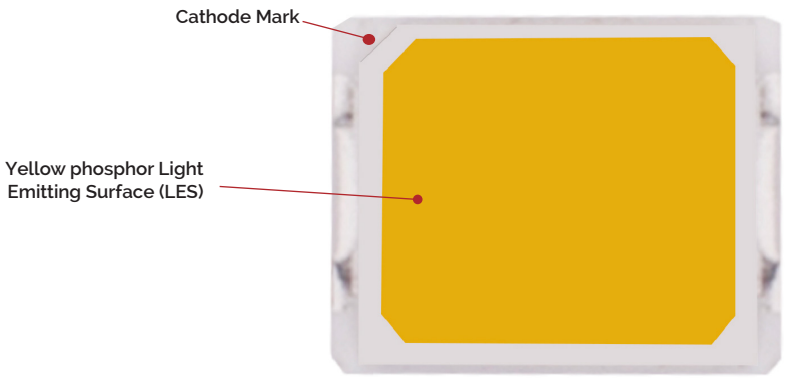

Product Nomenclature

The part number designation for Bridgelux SMD 2835 is explained as follows:

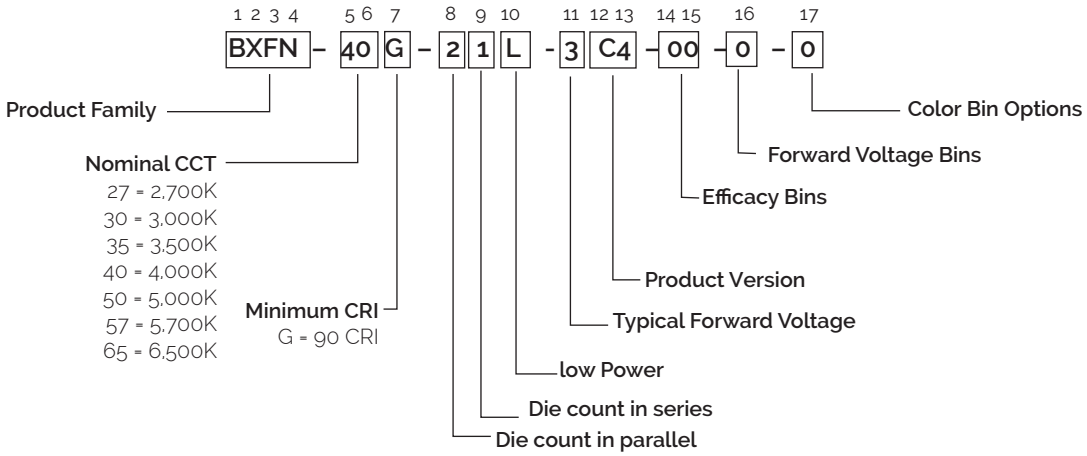

Product Test Conditions

Bridgelux SMD 2835 LEDs are tested and binned with a 10ms pulse of 65mA at T_j (junction temperature)=T_{sp} (solder point temperature) =25˚C. Forward voltage and luminous efficacy are binned at a T_j=T_{sp}=25˚C.

Product Selection Guide

The following product configurations are available:

Table 1: Selection Guide, Pulsed Measurement Data at 65mA (T_j=T_{sp}=25˚C)

Part Number[1,6]	Nominal CCT[2] (K)	CRI[3, 5]	Nominal Test Current (mA)	Forward Voltage[4, 5] (V)			Typical Pulsed Flux (lm)[4, 5]	Typical Power (W)	Typical Efficacy (lm/W)
				Min	Typical	Max			
BXFN-27G-21L-3C4-00-0-0	2700	87	65	2.60	2.72	2.90	34.5	0.2	195
BXFN-30G-21L-3C4-00-0-0	3000	87	65	2.60	2.72	2.90	35.0	0.2	198
BXFN-35G-21L-3C4-00-0-0	3500	87	65	2.60	2.72	2.90	35.0	0.2	198
BXFN-40G-21L-3C4-00-0-0	4000	87	65	2.60	2.72	2.90	36.0	0.2	204
BXFN-50G-21L-3C4-00-0-0	5000	87	65	2.60	2.72	2.90	36.0	0.2	204
BXFN-57G-21L-3C4-00-0-0	5700	87	65	2.60	2.72	2.90	35.5	0.2	201
BXFN-65G-21L-3C4-00-0-0	6500	87	65	2.60	2.72	2.90	35.5	0.2	201

Table 2: Selection Guide, Pulsed Test Performance (T_{sp} = 85˚C)[7,8]

Part Number[1,6]	Nominal CCT[2] (K)	CRI[3, 5]	Nominal Test Current (mA)	Forward Voltage[4, 5] (V)			Typical Pulsed Flux (lm)[4, 5]	Typical Power (W)	Typical Efficacy (lm/W)
				Min	Typical	Max			
BXFN-27G-21L-3C4-00-0-0	2700	90	65	2.54	2.66	2.84	31.2	0.2	180
BXFN-30G-21L-3C4-00-0-0	3000	90	65	2.54	2.66	2.84	31.6	0.2	183
BXFN-35G-21L-3C4-00-0-0	3500	90	65	2.54	2.66	2.84	31.6	0.2	183
BXFN-40G-21L-3C4-00-0-0	4000	90	65	2.54	2.66	2.84	32.5	0.2	188
BXFN-50G-21L-3C4-00-0-0	5000	90	65	2.54	2.66	2.84	32.5	0.2	188
BXFN-57G-21L-3C4-00-0-0	5700	90	65	2.54	2.66	2.84	32.1	0.2	185
BXFN-65G-21L-3C4-00-0-0	6500	90	65	2.54	2.66	2.84	32.1	0.2	185

Notes for Tables 1 & 2:

1. The last 6 characters (including hyphens '-') refer to efficacy bins, forward voltage bins, and color bin options, respectively. "00-0-0" denotes the full distribution of efficacy, forward voltage, and 6 SDCM color.
   Example: BXFN-40G-21L-3C4-00-0-0 refers to the full distribution of efficacy, forward voltage, and color within a 4000K 6-step ANSI standard chromaticity region with a minimum of 87 CRI , 2x1 die configuration, low power, 2.72V typical forward voltage.
2. Product CCT is the nominal CCT at Tsp = 25˚C as defined by ANSI C78.377-2011.
3. Listed CRIs are minimum values and include test tolerance.
4. Products tested under pulsed condition (10ms pulse width) at nominal Test current where Tj=Tsp=25˚C.
5. Bridgelux maintains a ±7.5% tolerance on efficacy measurements, ±0.1V tolerance on forward voltage measurements, and ±2 tolerance on CRI measurements for the SMD 2835.
6. Refer to Table 5 and Table 6 for Bridgelux SMD 2835 efficacy Binning and Forward Voltage Binning information.
7. Typical pulsed test performance values are provided as reference only and are not a guarantee of performance.
8. Typical performance is estimated based on operation under pulsed current with LED emitter mounted onto a heat sink with thermal interface material and the solder point temperature maintained at 85˚C. Based on Bridgelux test setup, values may vary depending on the thermal design of the luminaire and/or the exposed environment to which the product is subjected.
9. In order to ensure the accuracy of the test by Everfine sphere the test model suggest to use conventional test preheat for 30ms integrating time for 20ms.If using pulse model, pulse width suggest to use IP 80-90%.Hot cold test must use conventional test and wavelength accuracy is required to be 1nm. The test conditions must be fixed.

Performance at Commonly Used Drive Currents

SMD 2835 LEDs are tested to the specifications shown using the nominal drive currents in Table 1. SMD 2835 may also be driven at other drive currents dependent on specific application design requirements. The performance at any drive current can be derived from the current vs. voltage characteristics shown in Figure 2 and the relative luminous flux vs. current characteristics shown in Figure 3. The performance at commonly used drive currents is summarized in Table 3.

Table 3: Performance at Commonly Used Drive Currents

Part Number	Drive Current[1] (mA)	Typical V_f T_{sp} = 25°C (V)	Typical Power T_{sp} = 25°C (W)	Typical Pulsed Flux[2] T_{sp} = 25°C (lm)	Typical DC Flux[3] T_{sp} = 85°C (lm)	Typical Efficacy T_{sp} = 25°C (lm/W)
BXFN-27G-21L-3C4-00-0-0	40	2.68	0.1	21.4	19.3	200
	60	2.71	0.2	31.9	28.8	196
	100	2.78	0.3	52.7	47.6	190
	120	2.82	0.3	62.8	56.7	186
	150	2.86	0.4	77.6	70.1	181
BXFN-30G-21L-3C4-00-0-0	40	2.68	0.1	21.7	19.6	202
	60	2.71	0.2	32.4	29.3	199
	100	2.78	0.3	53.5	48.3	192
	120	2.82	0.3	63.8	57.6	189
	150	2.86	0.4	78.8	71.2	185
BXFN-35G-21L-3C4-00-0-0	40	2.68	0.1	21.7	19.6	202
	60	2.71	0.2	32.4	29.3	199
	100	2.78	0.3	53.5	48.3	192
	120	2.82	0.3	63.8	57.6	189
	150	2.86	0.4	78.8	71.2	185
BXFN-40G-21L-3C4-00-0-0	40	2.68	0.1	22.3	20.1	208
	60	2.71	0.2	33.4	30.2	205
	100	2.78	0.3	55.0	49.7	198
	120	2.82	0.3	65.5	59.1	194
	150	2.86	0.4	81.1	73.2	189
BXFN-50G-21L-3C4-00-0-0	40	2.68	0.1	22.3	20.1	208
	60	2.71	0.2	33.4	30.2	205
	100	2.78	0.3	55.0	49.7	198
	120	2.82	0.3	65.5	59.1	194
	150	2.86	0.4	81.1	73.2	189
BXFN-57G-21L-3C4-00-0-0	40	2.68	0.1	22.0	19.9	205
	60	2.71	0.2	32.9	29.7	202
	100	2.78	0.3	54.2	48.9	195
	120	2.82	0.3	64.5	58.2	191
	150	2.86	0.4	79.9	72.1	186
BXFN-65G-21L-3C4-00-0-0	40	2.68	0.1	22.0	19.9	205
	60	2.71	0.2	32.9	29.7	202
	100	2.78	0.3	54.2	48.9	195
	120	2.82	0.3	64.5	58.2	191
	150	2.86	0.4	79.9	72.1	186

Notes for Tables 3:

1. Alternate drive currents in Table 3 are provided for reference only and are not a guarantee of performance.
2. Bridgelux maintains a ± 7.5% tolerance on flux measurements.
3. Typical stabilized DC performance values are provided as reference only and are not a guarantee of performance.

Electrical Characteristics

Table 4: Electrical Characteristics

Part Number [1]	Test Current (mA)	Forward Voltage (V) [2,3]			Typical Temperature Coefficient of Forward Voltage $\Delta V_f/\Delta T$ (mV/°C)	Typical Thermal Resistance Junction to Solder Point[4] $R_{j\text{-}sp}$ (°C/W)
		Minimum	Typical	Maximum		
BXFN-XXG-21L-3C4-00-0-0	65	2.60	2.72	3.00	-0.94	10.0

Notes for Tables 4:

1. The last 6 characters (including hyphens '-') refer to efficacy bins, forward voltage bins, and color bin options, respectively. "00-0-0" denotes the full distribution of efficacy, forward voltage, and 6 SDCM color.
   Example: BXFN-40G-21L-3C4-00-0-0 refers to the full distribution of efficacy, forward voltage, and color within a 4000K 6-step ANSI standard chromaticity region with a minimum of 87 CRI , 2x1 die configuration, low power, 2.72V typical forward voltage.
2. Bridgelux maintains a tolerance of ± 0.1V on forward voltage measurements. Voltage minimum and maximum values at the nominal Test current are guaranteed by 100% test.
3. Products tested under pulsed condition (10ms pulse width) at nominal Test current where Tsp = 25˚C.
4. Thermal resistance value was calculated using total electrical input power; optical power was not subtracted from input power.

Absolute Maximum Ratings

Table 5: Maximum Ratings

Parameter	Maximum Rating
LED Junction Temperature (T_j)	125˚C
Storage Temperature	-40˚C to +105˚C
Operating Solder Point Temperature (T_{Sp})	-40˚C to +105˚C
Soldering Temperature	260˚C or lower for a maximum of 10 seconds
Maximum Test Current	180mA[3]
Maximum Peak Pulsed Forward Current[1]	360mA
Maximum Reverse Voltage[2]	VR=7V ,IR<1uA
Moisture Sensitivity Rating	MSL 4
Electrostatic Discharge	2kV HBM. JEDEC-JS-001-HBM and JEDEC-JS-001-2012

Notes for Table 5:

1. Bridgelux recommends a maximum duty cycle of 10% and pulse width of 10 ms when operating LED SMD at maximum peak pulsed current specified. Maximum peak pulsed current indicate values where LED SMD can be driven without catastrophic failures.
2. Light emitting diodes are not designed to be driven in reverse voltage and will not produce light under this condition. no rating is provided
3. The product is more sensitive to moisture. It's not good to use for outdoor application or damp environment .

Product Bin Definitions

Table 6 lists the standard photometric luminous efficacy bins for Bridgelux SMD 2835 LEDs. Although several bins are listed, product availability in a particular bin varies by production run and by product performance. Not all bins are available in all CCTs.

Table 6: Efficacy Bin Definitions at 65mA, T_{sp}=25˚C

Bin Code	Minimum	Maximum	Unit	Condition
1E	30	32	lm	I_F=65mA
1F	32	34		
1G	34	36		
1H	36	38		

Note for Tables 6:

1. Bridgelux maintains a tolerance of ± 7.5% on efficacy measurements.

Table 7: Forward Voltage Bin Definition at 65mA, T_{sp}=25˚C

Bin Code	Minimum	Maximum	Unit	Condition
8	2.6	2.7	V	I_F=65mA
9	2.7	2.8		
A	2.8	2.9		
B	2.9	3.0		

Note for Tables 7:

1. Bridgelux maintains a tolerance of ± 0.1V on forward voltage measurements.

Product Bin Definitions

Table 8: 3- and 6-step MacAdam Ellipse Color Bin Definitions

CCT	Color Space	Center Point		Major Axis	Minor Axis	Ellipse Rotation Angle	Color Bin
		X	Y				
2700K	3 SDCM	0.4578	0.4101	0.0081	0.0042	53.70	1
	6 SDCM	0.4578	0.4101	0.0162	0.0084	53.70	1/A/B/C/D/E/F
3000K	3 SDCM	0.4338	0.4030	0.00834	0.00408	53.22	1
	6 SDCM	0.4338	0.4030	0.01668	0.00816	53.22	1/A/B/C/D/E/F
3500K	3 SDCM	0.4073	0.3917	0.00927	0.00414	54.00	1
	6 SDCM	0.4073	0.3917	0.01854	0.00828	54.00	1/A/B/C/D/E/F
4000K	3 SDCM	0.3818	0.3797	0.00939	0.00402	53.72	1
	6 SDCM	0.3818	0.3797	0.01878	0.00804	53.72	1/A/B/C/D/E/F
5000K	3 SDCM	0.3447	0.3553	0.00822	0.00354	59.62	1
	6 SDCM	0.3447	0.3553	0.01644	0.00708	59.62	1/A/B/C/D/E/F
5700K	3 SDCM	0.3287	0.3417	0.00746	0.00320	59.09	1
	6 SDCM	0.3287	0.3417	0.01492	0.00640	59.09	1/A/B/C/D/E/F
6500K	3 SDCM	0.3123	0.3282	0.00669	0.00285	58.57	1
	6 SDCM	0.3123	0.3282	0.01338	0.0057	58.57	1/A/B/C/D/E/F

Notes for Table 8:

1. Color binning at T_{sp}=60˚C unless otherwise specified
2. Bridgelux maintains a tolerance of ± 0.007 on x and y color coordinates in the CIE 1931 color space.

Product Bin Definitions

Figure 1: **C.I.E. 1931 Chromaticity Diagram (7 Color Bin Structure, Hot-color Targeted at T_{sp}=60˚C)**

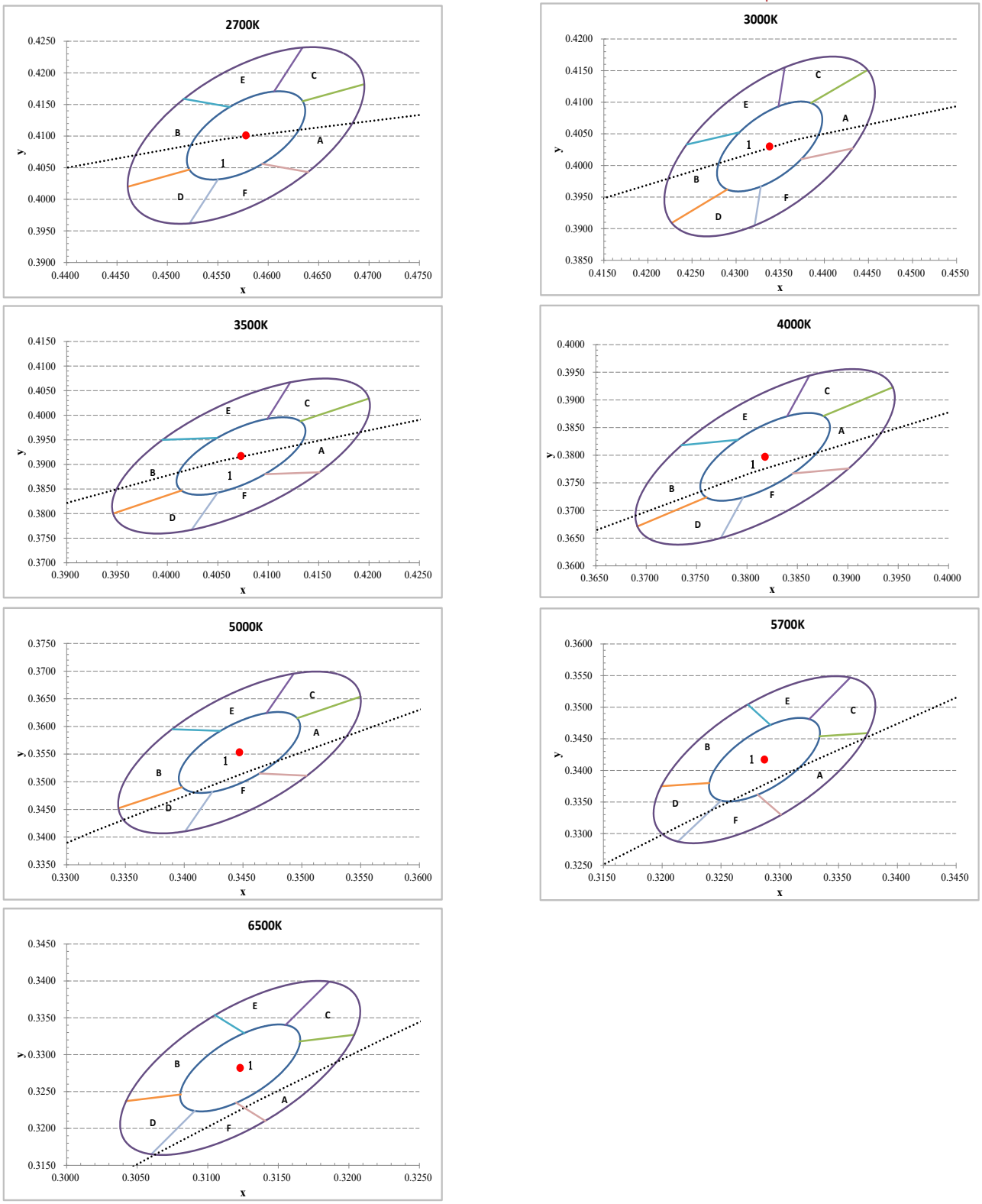

Performance Curves

Figure 2: **Test Current vs. Voltage (T_{sp}=25˚C)**

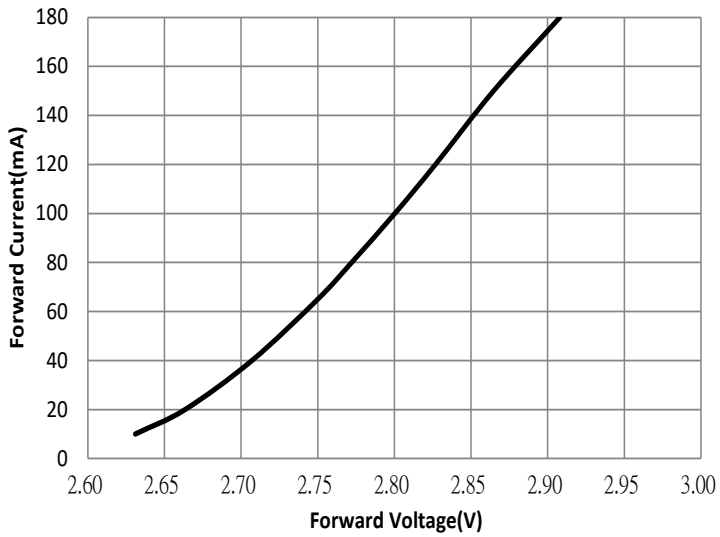

Figure 3: **Typical Relative Luminous Flux vs. Test Current (T_{sp}=25˚C)**

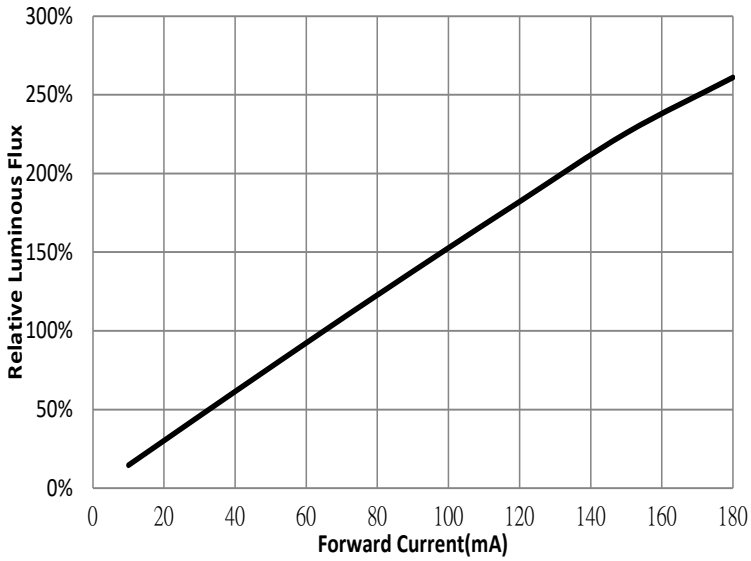

Note for Figure 3:

1. Bridgelux does not recommend driving low power LEDs at low currents. Which may produce unpredictable results. Pulse width modulation (PWM) is recommended for dimming effects.

Performance Curves

Figure 4: **Typical Relative Flux vs. Solder Point Temperature**

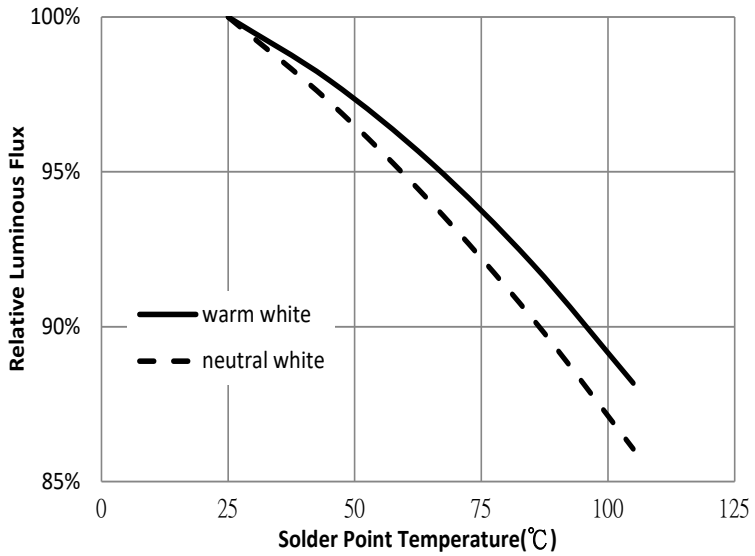

Figure 5: **Typical ccx Shift vs. Solder Point Temperature**

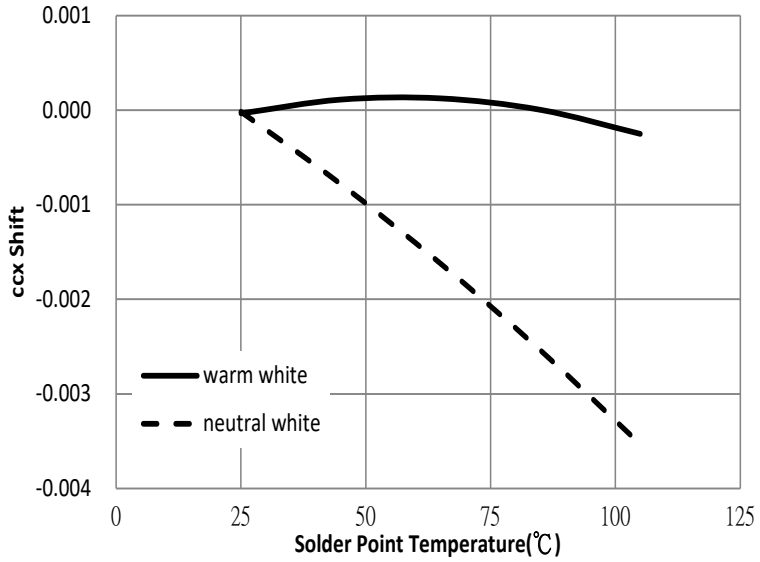

Notes for Figures 4 & 5:

1. Characteristics shown for warm white based on 3000K and 90 CRI.
2. Characteristics shown for neutral white based on 4000K and 90 CRI.
3. For other color SKUs, the shift in color will vary. Please contact your Bridgelux Sales Representative for more information

Performance Curves

Figure 6: Typical ccy Shift vs. Solder Point Temperature

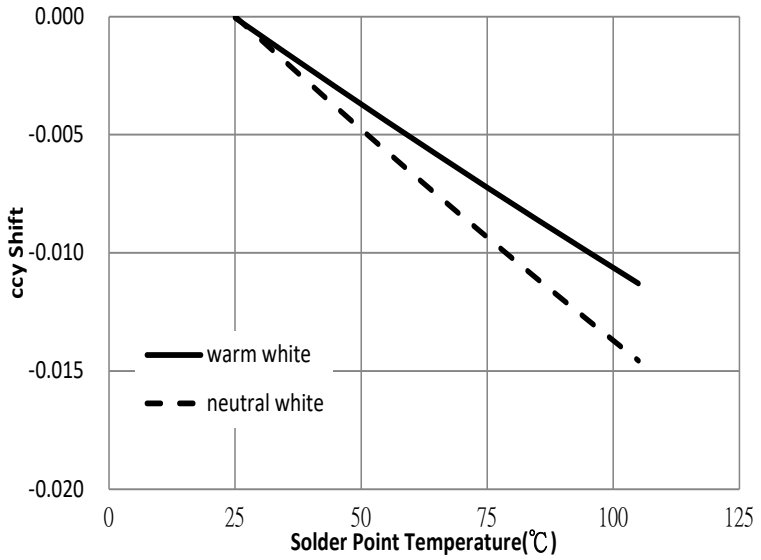

Notes for Figure 6:

1. Characteristics shown for warm white based on 3000K and 90 CRI.
2. Characteristics shown for neutral white based on 4000K and 90 CRI.
3. For other color SKUs, the shift in color will vary. Please contact your Bridgelux Sales Representative for more information

Typical Radiation Pattern

Figure 7: Typical Spatial Radiation Pattern at 65mA, T_{sp}=25˚C

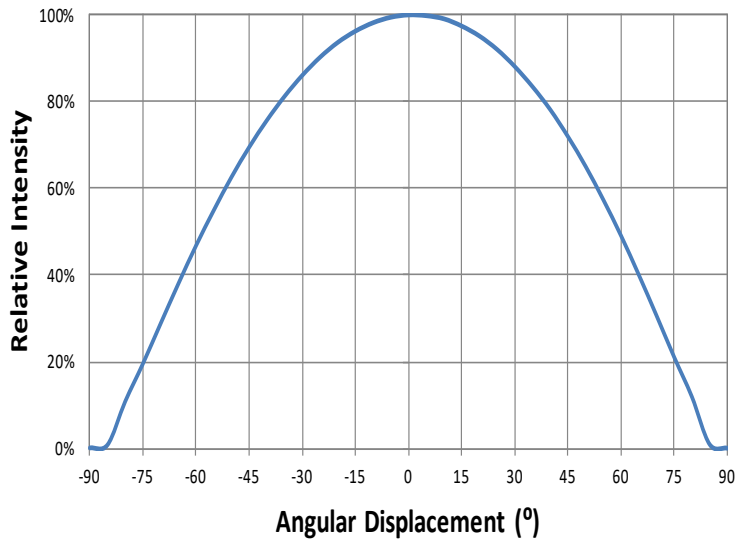

Notes for Figure 7:

1. Typical viewing angle is 120˚.
2. The viewing angle is defined as the off axis angle from the centerline where luminous intensity (Iv) is ½ of the peak value.

Figure 8: Typical Polar Radiation Pattern at 65mA, T_{sp}=25˚C

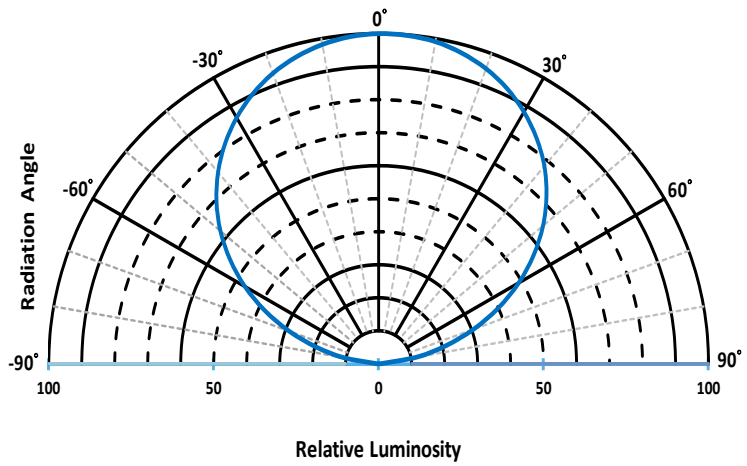

Typical Color Spectrum

Figure 9: Typical Color Spectrum

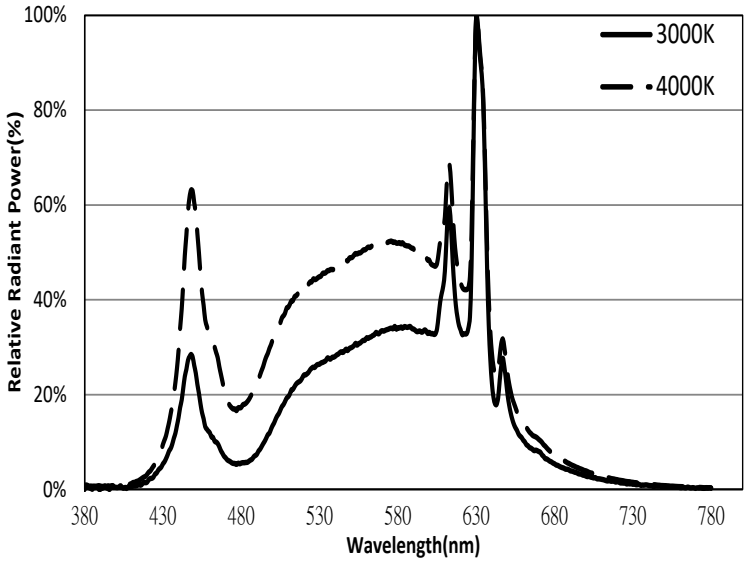

Notes for Figure 9:

1. Color spectra measured at nominal current for Tsp = 25°C
2. Color spectra shown for 90 CRI products.

Mechanical Dimensions

Figure 10: **Drawing for SMD 2835**

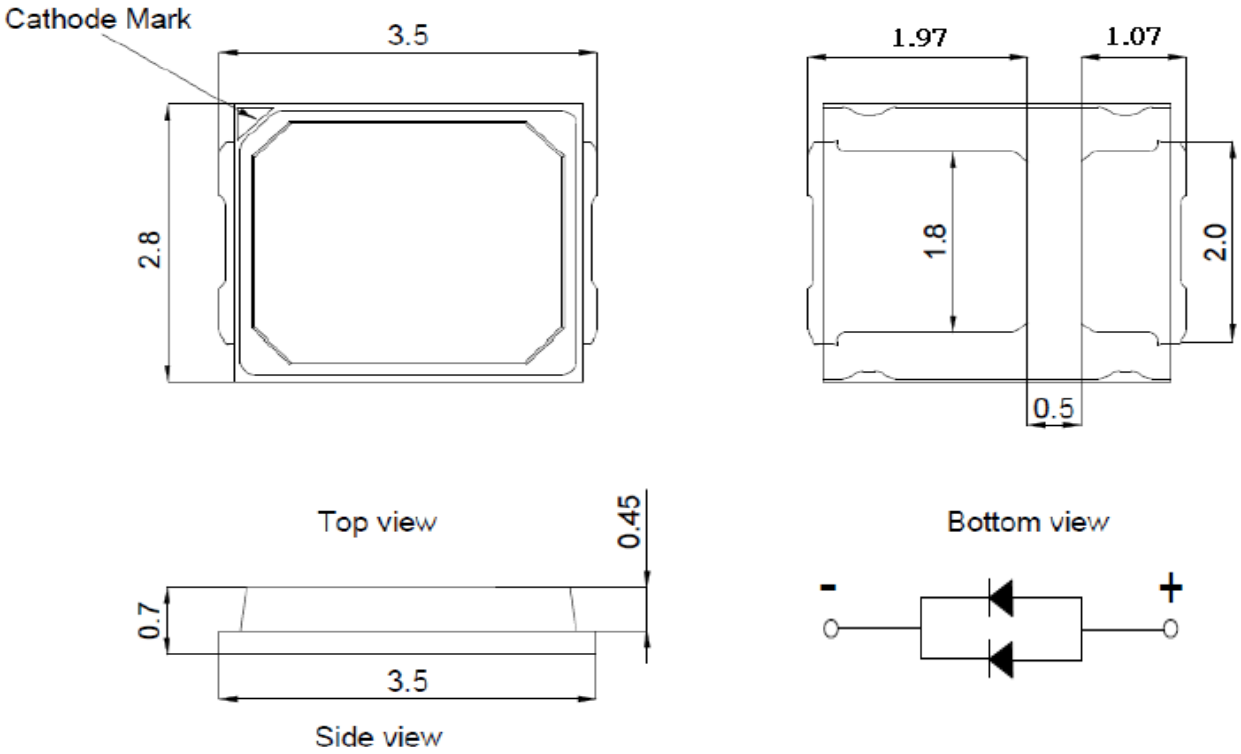

Notes for Figure 10:

1. Drawings are not to scale.
2. Drawing dimensions are in millimeters.
3. Different mould pattern would be Different .
4 Unless otherwise specified, tolerances are ± 0.10mm.

Recommended PCB Soldering Pad Pattern

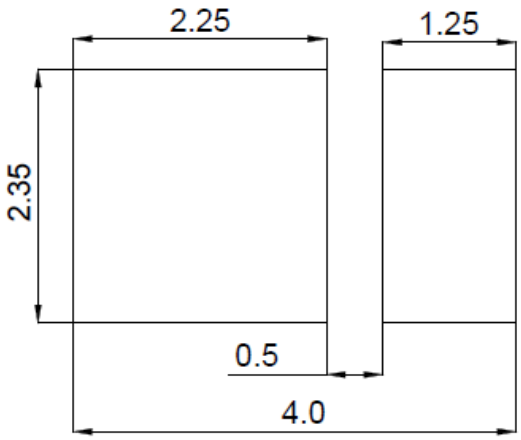

Reliability

Table 9: Reliability Test Items and Conditions

No .	Items	Reference Standard	Test Conditions	Test Current	Test Duration	Units Failed/Tested
1	Moisture/Reflow Sensitivity	J-STD-020E	T_{sld} = 260˚C, 10sec, Precondition: 60˚C, 60%RH, 168hr	-	3 reflows	0/22
2	Low Temperature Storage	JESD22-A119	T_a=-40˚C	-	1000 hours	0/22
3	High Temperature Storage	JESD22-A103D	T_a= 105˚C	-	1000 hours	0/22
4	Low Temperature Operating Life	JESD22-A108D	T_a=-40˚C	65mA	1000 hours	0/22
5	Temperature Humidity Operating Life	JESD22-A101C	T_{sp}=85˚C, RH=85%	65mA	1000 hours	0/22
6	High Temperature Operating Life	JESD22-A108D	T_{sp}=85˚C	180mA	1000 hours	0/22
7	Power switching	IEC62717:2014	T_{sp}= 85˚C 30 sec on, 30 sec off	180mA	30000 cycles	0/22
8	Thermal Shock	JESD22-A106B	T_a=-40˚C ~105˚C; Dwell : 15min; Transfer: 10sec	-	200 cycles	0/22
9	Temperature Cycle	JESD22-A104E	T_a=-40˚C ~100˚C; Dwell at extreme temperature: 15min; Ramp rate < 105˚C/min	-	200 cycles	0/22
10	Electrostatic Discharge	JS-001-2012	HBM, 2KV, 1.5kΩ, 100pF, Alternately positive or negative	-	-	0/22

Passing Criteria

Item	Symbol	Test Condition	Passing Criteria
Forward Voltage	Vf	65mA	ΔVf<10%
Luminous Flux	Fv	65mA	ΔFv<30%
Chromaticity Coordinates	(x, y)	65mA	Δu'v'<0.007

Notes for Tables 9:

1. Measurements are performed after allowing the LEDs to return to room temperature
2. T_{sld} : reflow soldering temperature; T_a : ambient temperature

Reflow Characteristics

Figure 11 : Reflow Profile

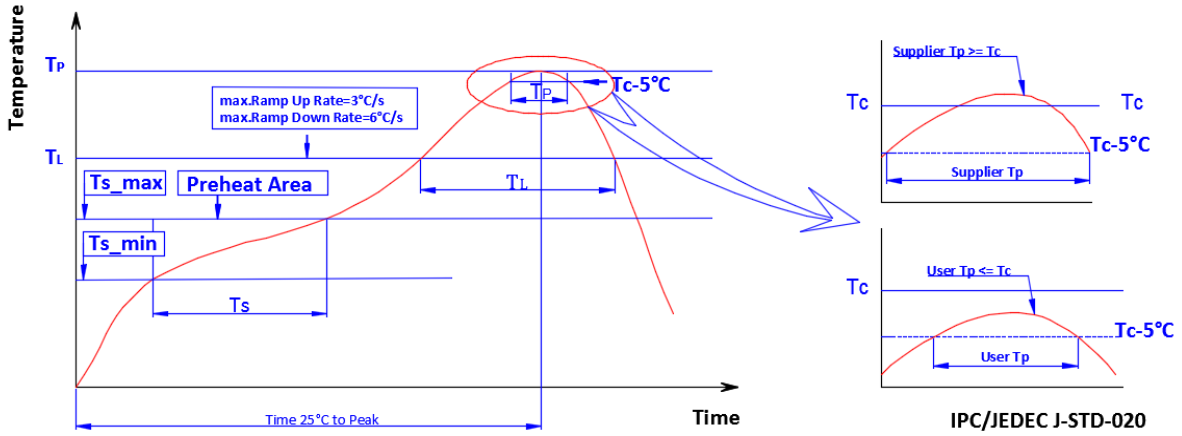

Profile Feature	Lead Free Assembly
Temperature Min. (Ts_min)	160˚C
Temperature Max. (Ts_max)	205˚C
Time (ts) from Ts_min to Ts_max	60-150 seconds
Ramp-Up Rate (TL to Tp)	3 ˚C/second
Liquidus Temperature (TL)	220 ˚C
Time (TL) Maintained Above TL	60-150 seconds
Peak Temp(Tp)	260 ˚C max.
Time (Tp) Within 5 ˚C of the Specified Classification Temperature (Tc)	25 seconds max.
Ramp-Down Rate (Tp to TL)	5 ˚C/second max.
Time 25 ˚C to Peak Temperature	10 minutes max.

Figure 12 : Pick and Place

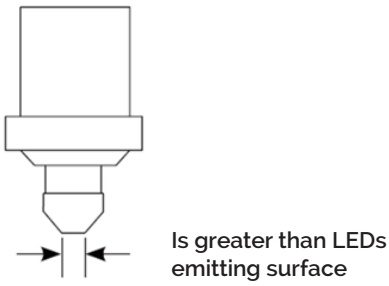

Note for Figure 12:

1. When using a pick and place machine, choose a nozzle that has a larger diameter than the LED's emitting surface. Using a Pick-and-Place nozzle with a smaller diameter than the size of the LEDs emitting surface will cause damage and may also cause the LED to not illuminate.

Packaging

Figure 13: **Emitter Reel Drawings**

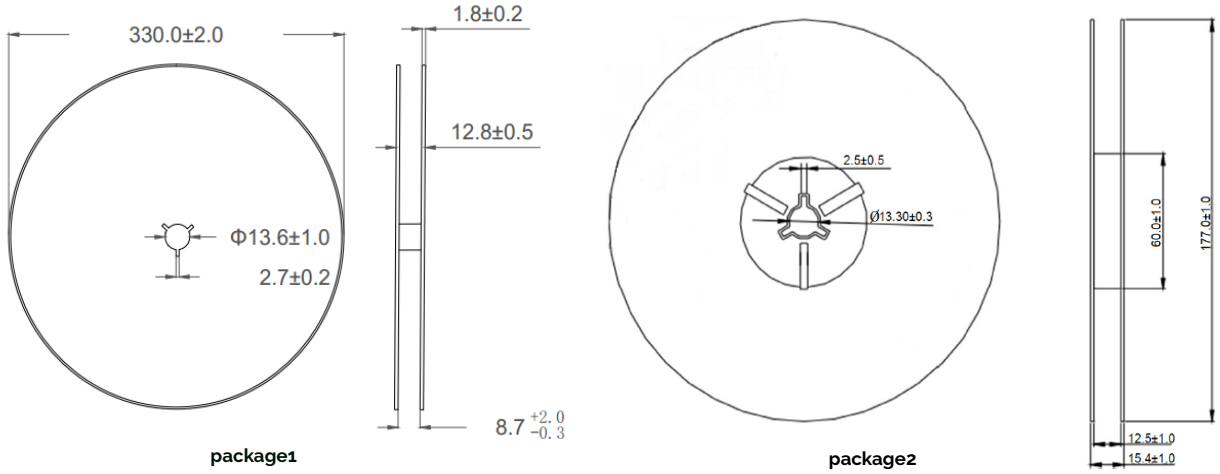

Note for Figure 13:

1. Drawings are not to scale. Drawing dimensions are in millimeters.

Figure 14: **Emitter Tape Drawings**

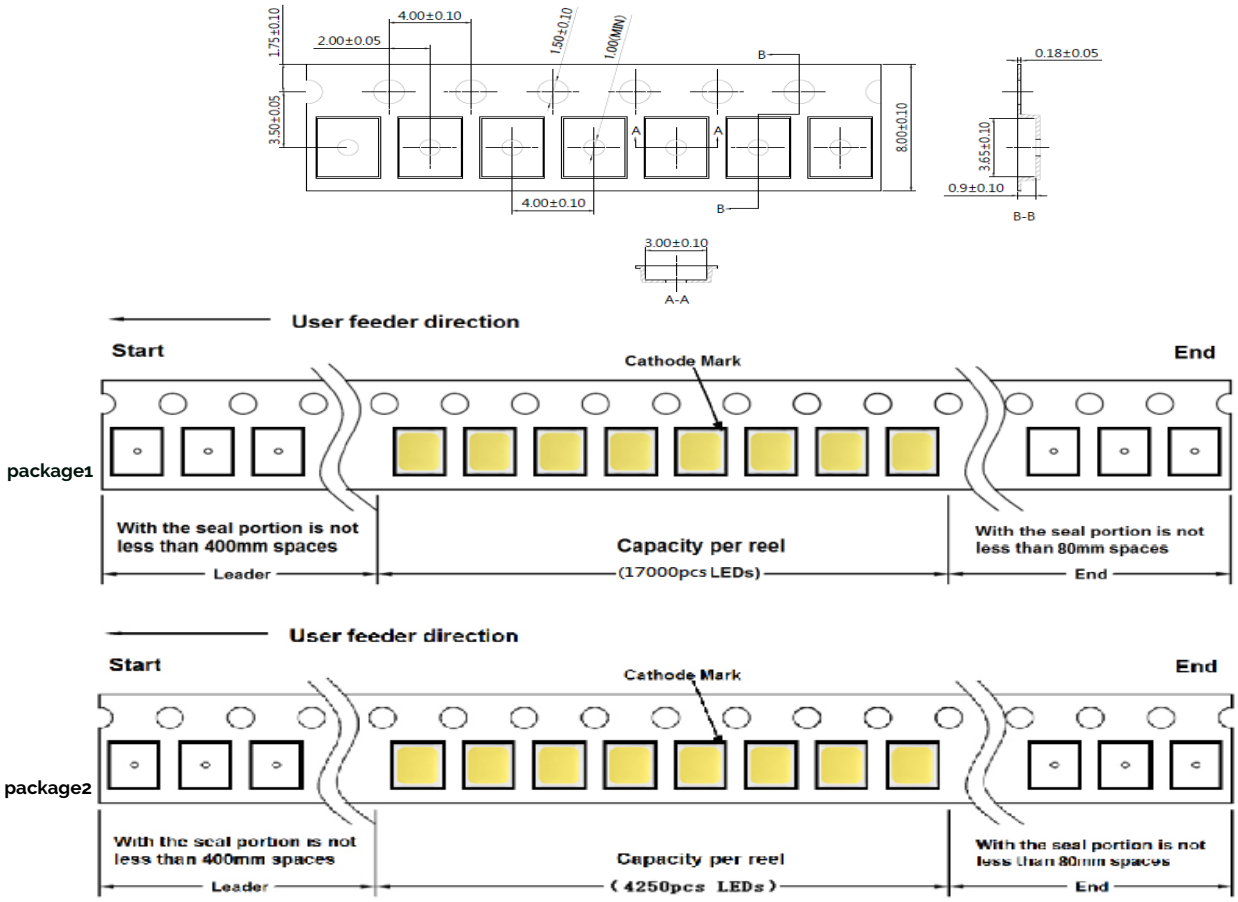

Note for Figure 14:

1. Drawings are not to scale. Drawing dimensions are in millimeters.

Packaging

Figure 15: Emitter Reel Packaging Drawings

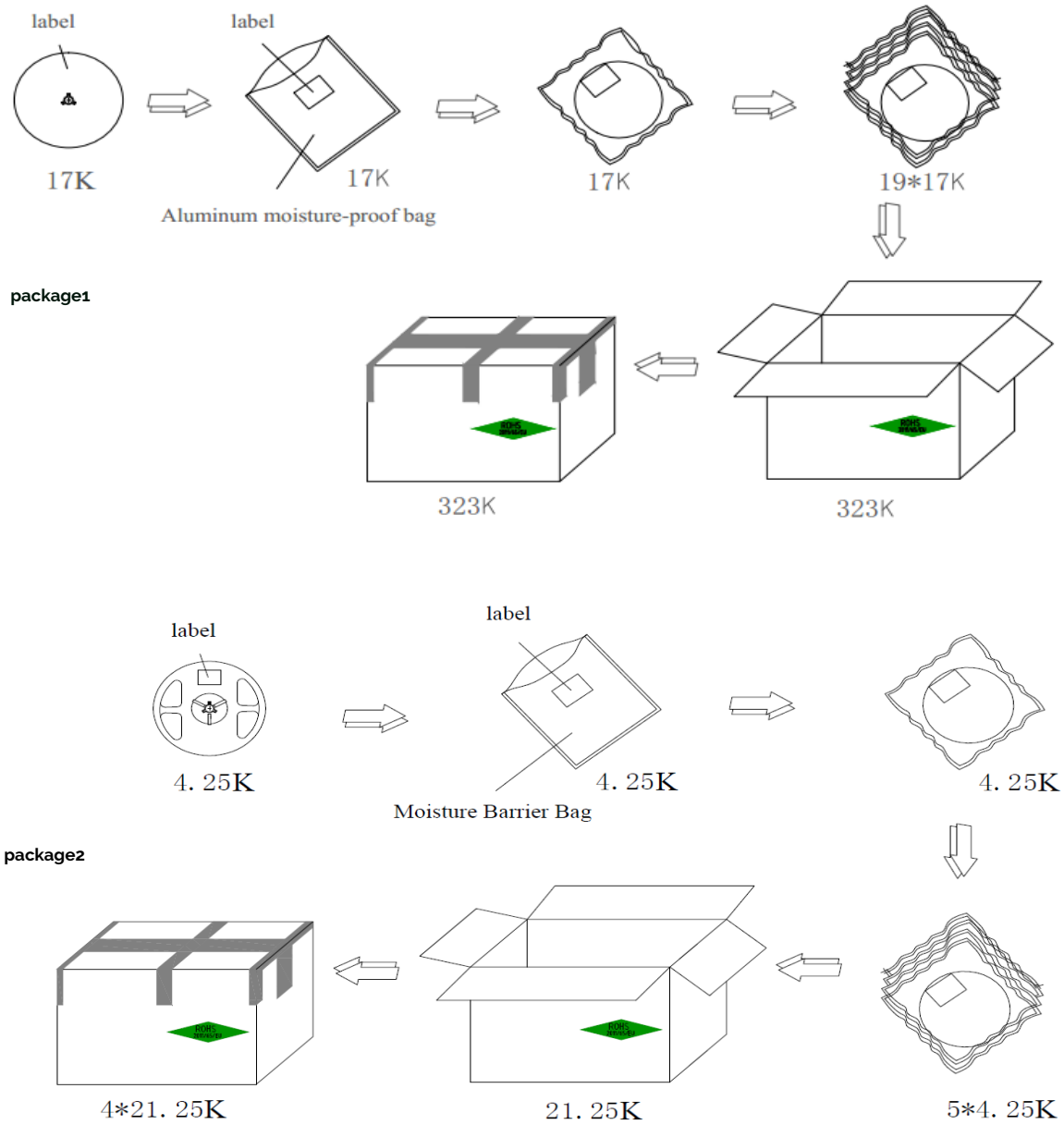

Note for Figure 15:

1. Drawings are not to scale.

Design Resources

Please contact your Bridgelux sales representative for assistance.

Precautions

CAUTION: CHEMICAL EXPOSURE HAZARD

Exposure to some chemicals commonly used in luminaire manufacturing and assembly can cause damage to the LED emitter. Please consult Bridgelux Application Note AN51 for additional information.

CAUTION: EYE SAFETY

Eye safety classification for the use of Bridgelux SMD LED emitter is in accordance with IEC specification EN62471: Photobiological Safety of Lamps and Lamp Systems. SMD LED emitters are classified as Risk Group 1 when operated at or below the maximum Test current. Please use appropriate precautions. It is important that employees working with LEDs are trained to use them safely.

CAUTION: RISK OF BURN

Do not touch the SMD LED emitter during operation. Allow the emitter to cool for a sufficient period of time before handling. The SMD LED emitter may reach elevated temperatures such that could burn skin when touched.

CAUTION

CONTACT WITH LIGHT EMITTING SURFACE (LES)

Avoid any contact with the LES. Do not touch the LES of the emitter or apply stress to the LES (yellow phosphor resin area). Contact may cause damage to the emitter

Optics and reflectors must not be mounted in contact with the LES (yellow phosphor resin area).

Disclaimers

MINOR PRODUCT CHANGE POLICY

The rigorous qualification testing on products offered by Bridgelux provides performance assurance. Slight cosmetic changes that do not affect form, fit, or function may occur as Bridgelux continues product optimization.

STANDARD TEST CONDITIONS

Unless otherwise stated, LED emitter testing is performed at the nominal Test current.

About Bridgelux: Bridging Light and Life™

At Bridgelux, we help companies, industries and people experience the power and possibility of light. Since 2002, we've designed LED solutions that are high performing, energy efficient, cost effective and easy to integrate. Our focus is on light's impact on human behavior, delivering products that create better environments, experiences and returns—both experiential and financial. And our patented technology drives new platforms for commercial and industrial luminaires.

For more information about the company, please visit
bridgelux.com
twitter.com/Bridgelux
facebook.com/Bridgelux
youtube.com/user/Bridgelux
WeChat ID: BridgeluxInChina
https://www.linkedin.com/company/bridgelux-inc-_2

46430 Fremont Boulevard
Fremont, CA 94538 USA
Tel (925) 583-8400
Fax (925) 583-8401
www.bridgelux.com

© 2021 Bridgelux, Inc. All rights reserved 2021. Product specifications are subject to change without notice. Bridgelux and the Bridgelux stylized logo design are registered trademarks of Bridgelux, Inc. All other trademarks are the property of their respective owners.