THIS DRAWING IS UNPUBLISHED. RELEASED FOR PUBLICATION 20
© COPYRIGHT 20 BY - ALL RIGHTS RESERVED.

REVISIONS

P	LTR	DESCRIPTION	DATE	DWN	APVD
	A2	ECR-16-010931 UPDATE NAME	02AUG2016	L.Z	X.X

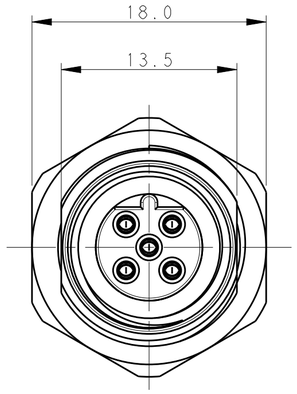

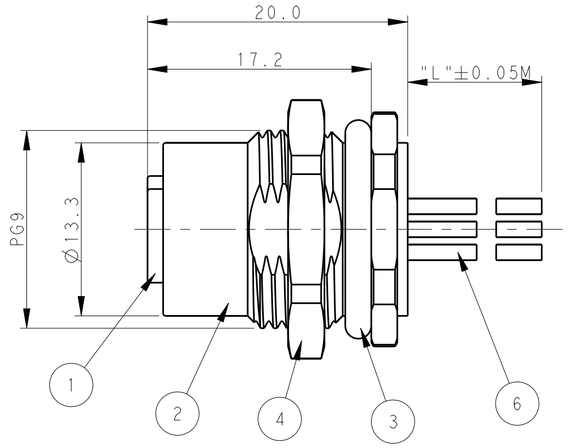

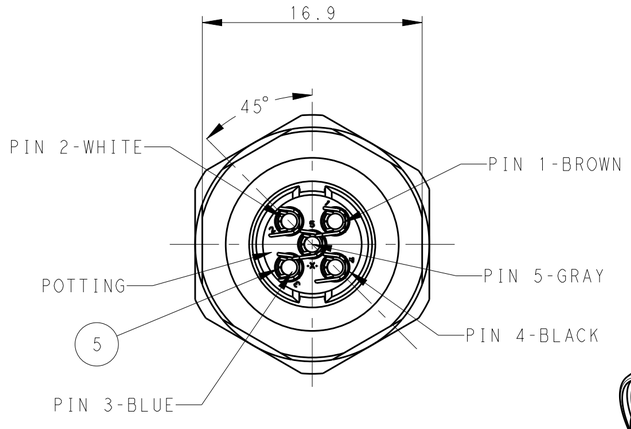

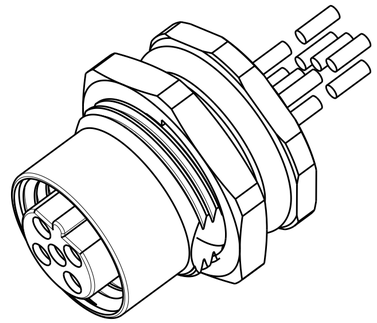

TABLE 1

TECHNICAL DATA	T4171110402-00L	T4171110403-00L	T4171110404-00L	T4171110405-00L
RATED VOLTAGE	250V	250V	250V	60V
RATED CURRENT	4A	4A	4A	4A
POLLITION DEGREE	3	3	3	3
OVERVOLTAGE CATEGORY	II	II	II	II
MATERIAL GROUP	II	II	II	II
CONTACT RESISTANCE	<=10mΩ	<=10mΩ	<=10mΩ	<=10mΩ
INSULATION RESISTANCE	>100MΩ	>100MΩ	>100MΩ	>100MΩ
DEGREE OF PROTECTION	IP67	IP67	IP67	IP67
OPERATION TEMPEATURE	-40~85°C	-40~85°C	-40~85°C	-40~85°C

NOTE:
1. TECHNICAL DATA: SEE TABLE 1
2. PRODUCT COMPLIES WITH IEC61076-2-101
3. PLASTIC INERT MATERIAL:UL LISTED WITH UL94V0 FLAME RATING
4. CABLE LENGTH SEE TABLE 2

注释:
1:技术参数,见表1
2:产品符合标准IEC61076-2-101
3:塑胶材料符合UL标准,UL-94V0阻燃等级
4:线长度见表2

CABLE CHARACTERISTIC	CABLE LENGTH "L"	DESCRIPTION	POS	TABLE 2 PN
WIRES: 0.34MM^2(22AWG) WIRE PN AND COLOR: 1(BR)/2(WH)/3(BL)/4(BK)/5(GR)	-001:0.2M -002:0.5M -003:1.0M -004:1.5M -005:3.0M (4) -006:5.0M -007:7.0M -008:10.0M	RPC-M12B-FF-5CON-PG9-**LAU (4)	5	T4171110405-00L
		RPC-M12B-FF-4CON-PG9-**LAU (4)	4	T4171110404-00L
		RPC-M12B-FF-3CON-PG9-**LAU (4)	3	T4171110403-00L
		RPC-M12B-FF-2CON-PG9-**LAU (4)	2	T4171110402-00L

COMMENT	MATERIAL	DESCRIPTION	ITEM	T4171110402-00L	T4171110403-00L	T4171110404-00L	T4171110405-00L
-	-	WIRE	6	2	3	4	5
FLASH GOLD	COPPER ALLOY	CONTACT	5	2	3	4	5
-	COPPER ALLOY	METAL NUT	4	1	1	1	1
-	-	O-RING	3	1	1	1	1
-	COPPER ALLOY	M12,MALE,METAL BODY	2	1	1	1	1
BLACK	NYLON	M12,MALE HSG, B CODE, 5PINS	1	1	1	1	1

PIN ARRANGEMENT
B-CODE

T4171110402-00L

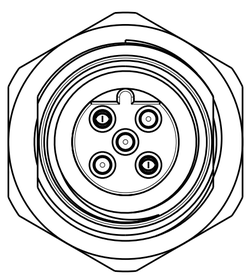

T417111403-00L

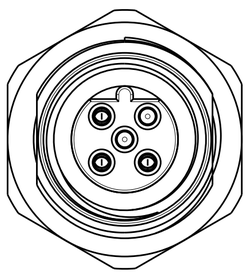

T4171110404-00L

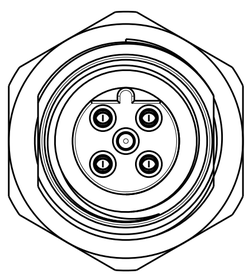

T4171110405-00L

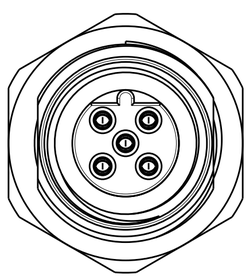

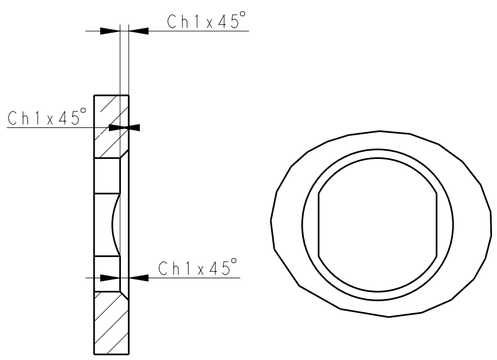

RECOMMENDED PANEL CUTOUT

THIS DRAWING IS A CONTROLLED DOCUMENT.

DIMENSIONS: mm

TOLERANCES UNLESS OTHERWISE SPECIFIED:
0 PLC ±-
1 PLC ±0.2
2 PLC ±0.2
3 PLC ±-
4 PLC ±-
ANGLES ±-

MATERIAL - -
FINISH - -

DWN BO GAO 30MAR2016
CHK KOBBY ZHAO 30MAR2016
APVD XIANG XU 30MAR2016
PRODUCT SPEC 108-106140
APPLICATION SPEC 114-137144
WEIGHT -

TE Connectivity

NAME
M12 PANEL MOUNT CONNECTOR
B CODE, FEMALE, REAR MOUNTING
-

SIZE	CAGE CODE	DRAWING NO	RESTRICTED TO
A2	-	C-T417111040X00L	-

CUSTOMER DRAWING SCALE 3:1 SHEET 1 OF 1 REV A2

1471-9 (3/13)

sales@prom-elec.com / ООО ПРОМЭЛЕКТРОНИКА