FREQUENCY INVERTER

E600

0.2kW-5,5kW

Safety instructions Installation & operating manual

EURA DRIVES | www.euradrives.net |

sales@prom-elec.com / ООО ПРОМЭЛЕКТРОНИКА

CONTENTS

I. Safety 3
1.1 Safety information..... 3
1.2 Before using..... 8
1.3 Designed Standards for Implementation..... 10
II. Product 11
2.1 Product model naming rule..... 11
2.2 Optional function naming rule..... 11
2.3 Nameplate 13
2.4 Appearance..... 13
2.5 Technical Specifications 14
III. Keypad panel..... 16
3.1 Panel Illustrations..... 16
3.2 Panel Structure..... 18
3.3 Panel Operating 21
3.4 Parameters Setting 21
3.5 Function Codes Switchover In/Between Code-Groups..... 22
3.6 Panel Display 24
IV. Installation & Connection 25
4.1 Installation..... 25
4.2 Connection 25
4.3 Measurement of main circuit..... 26
4.4 Function of Control Terminals..... 30
4.5 Wiring Recommended..... 32
4.6 Lead Section Area of Protect Conductor(grounding wire) 32
4.7 Overall connection..... 33
4.8 Basic methods of suppressing the noise 34
V. Operation and Simple Running 40

5.1 Basic conception…… 40
5.2 Keypad panel and operation method…… 41
5.3 Illustration of basic operation…… 43
VI. Function Parameters …… 49
6.1 Basic Parameters…… 49
6.2 Operation Control …… 57
6.3 Multifunctional Input and Output Terminals…… 64
6.4 Analog Input and Output…… 71
6.5 Multi-stage Speed Control…… 74
6.6 Auxiliary Functions…… 76
6.7 Malfunction andProtection…… 79
6.8 Parameters of the motor…… 82
6.9 Communication parameters…… 83
6.10 PID parameters…… 83
6.11 Parameters display…… 86

Appendix 1 Trouble Shooting…… 87
Appendix 2 Products and Structure …… 89
Appendix 3 Selection of Braking Resistance…… 91
Appendix 4 Communication Manual…… 92
Appendix 5 Zoom Table of Function Code…… 101
Appendix 6 Input filter model and dimension…… 115

I. Safety

Read this manual carefully so that you have a thorough understanding. Installation, commissioning or maintenance may be performed in conjunction with this chapter. EURA will assume no liability or responsibility for any injury or loss caused by improper operation.

1.1 Safety information

1.1.1 Application Area

The equipment described is intended for industrial motor speed control utilising AC induction motors.

1.1.2 Safety definition

Danger: series physical injury or even death may occur if not follow relevant requirements.

Warning: Physical injury or damage to the devices may occur if not follow relevant requirements.

Note: Physical hurt may occur if not follow relevant requirements.

Qualified electricians: People working on the device should take part in professional electrical and safety training, receive the certification and be familiar with all steps and requirements of installing, commissioning, operating and maintaining the device to avoid any emergency.

1.1.3 Warning symbols

Warning caution you about conditions which can result in serious injury or death and/or damage to the equipment, and advice on how to avoid the danger. Following warning symbols are used in this manual.

Symbols	Name	Instruction	Abbreviation
Danger	Electrical danger	Serious physical injury or even may occur if not follow the relative requirements.	
Hot sides	Hot sides	Sides of the device may become hot. Do not touch.	
Warning	Warning	Physical injury or damage to the devices may occur if not follow the relative requirements.	
Do not	Electrostatic	Damage to the PCB board may occur if not follow the	

	discharge	relative requirements.	
Note	Note	Physical hurt may occur if not follow the relative requirements.	**Note**

1.1.4 Safety guidelines

<table>
<tr><td></td><td>◇ Only qualified electricians are allowed to operate on the inverter.

◇ Do not carry out any wiring and inspection or changing components when the power supply is applied. Ensure all input power supply is disconnected before wiring and checking and always wait for at least the time designated on the inverter or until the DC bus voltage is less than 36V. Below is the table of the waiting time:
<table>
<tr><td>inverter model</td><td>Min theoretical waiting time</td></tr>
<tr><td>400V 22kW and below</td><td>5 minutes</td></tr>
</table></td></tr>
<tr><td></td><td>◇ The base of the radiator may become hot during running. Do not touch to avoid hurt.</td></tr>
<tr><td></td><td>◇ Do not refit the inverter unauthorizedly; otherwise fire, electric shock or other injury may occur.

◇ Never touch power terminals internal inverter to avoid any electric shock.

◇ Do not connect input power supply onto U, V. W or ⏚/PE/E terminals.

◇ Do not install inverter directly under sunshine, do not block up the cooling hole.

◇ All safety covers should be well fixed before inverter is power connected, to avoid any electric shock.</td></tr>
<tr><td></td><td>◇ The electrical parts and components inside the inverter are electrostatic. Take measurements to avoid electrostatic discharge relevant operation.</td></tr>
</table>

1.1.5 Delivery and installation

⚠	◇ Please install the inverter on fire-retardant material and keep the inverter away from combustible materials. ◇ Connect the braking optional parts (braking resistors, braking units or feedback units) according to the wiring diagram. ◇ Do not operate on the inverter if there is any damage or components loss to the inverter. ◇ Do not touch the inverter with wet items or body, otherwise electric shock may occur. ◇ Select appropriate moving and installing tools to ensure a safe and normal running of the inverter and avoid physical injury or death. For physical safety, the erector should take some mechanical protective measurements, such as wearing exposure shoes and working uniforms. ◇ Ensure to avoid physical shock or vibration during delivery and installation. ◇ Do not carry the inverter by its cover to avoid cover falling off. ◇ Install away from children and other public placers. ◇ Derating must be considered when the drive is installed at high altitude, greater than 1000m. This is because the cooling effect of drive is deteriorated due to the thin air, as shown in Fig1-1 that indicates the relationship between the elevation and rated current of the drive. ◇ Forbidden screws, cables and other conductive items to fall inside the inverter. ◇Proper grounding should be ensured with grounding resistance not exceeding 4Ω; separate grounding is required for motor and inverter. Grounding with series connection is forbidden.

	◇R，S and T are the input terminals of the power supply, while U, V and W are the motor terminals. Please connect the input power cables and motor cables with proper techniques; otherwise the damage to the inverter may occur. ◇If inverter is installed in a control cabinet, smooth ventilation should be ensured and inverter should be installed vertically (as shown in Fig1-2). If there are several inverters in one cabinet, in order to ensure ventilation, please install inverters side by side. If it is necessary to install several inverters up and down, please add heat-insulation plate (as shown in Fig1-3). ◇ Signal line should not be too long to avoid any increase with common mode interference. ◇Before using the drive, the insulation of the motors must be checked, especially, if it is used for the first time or if it has been stored for a long time. This is to reduce the risk of the drive from being damaged by the poor insulation of the motor. ◇Do not connect any varistor or capacitor to the output terminals of the drive, because the drive's output voltage waveform is pulse wave, otherwise tripping or damaging of components may occur; in addition, do not install circuit breaker or contactor at the output side of the drive as shown in Fig 1-4.

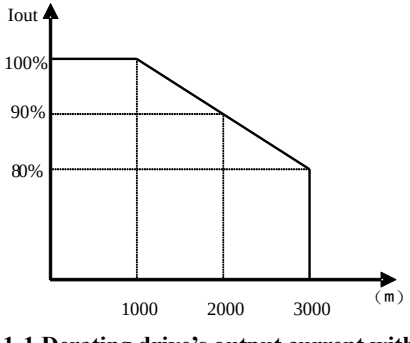

Fig 1-1 Derating drive's output current with altitude

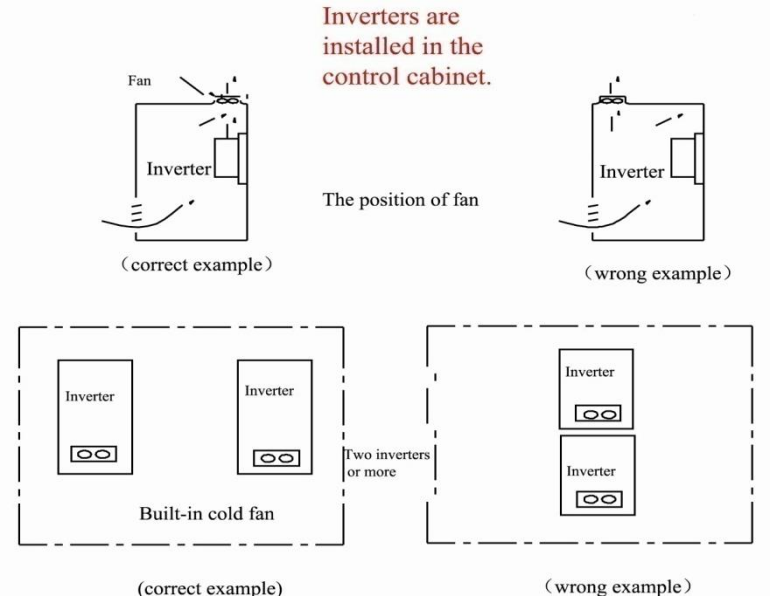

Fig 1-2 Installed in the cabinet

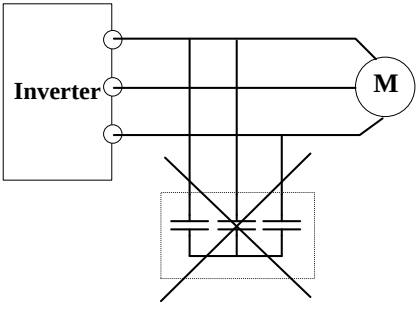

Fig 1-3 Capacitors are prohibited to be used.

1.2 Before using

1.2.1 Unpacking inspection

Check as followings after receiving products:

1. Check that there are no damage and humidification to the package. If not, please contact with local agents or company offices.
2. Check the information on the type designation label on the outside of the package to verify that the drive is of the correct type. If not, please contact with local dealers or company offices.
3. Check that there are no signs of water in the package and no signs of damage or breach to the inverter. If not, please contact with local dealers or company offices.
4. Check the information on the type designation label on the outside of the package to verify that the nameplate is of the correct type. If not, please contact with local dealers or company offices.
5. Check to ensure the accessories (including user manual, control keypad and extension card) inside the device is complete. If not, please contact with local dealers or company offices.

1.2.2 Application confirmation

Check the machine before beginning to use the inverter:

1. Check the load type to verify that there is no overload of the inverter during work and check that whether the drive needs to modify the power degree.
2. Check that the actual current of the motor is less than the rated current of the inverter.
3. Check that the control accuracy of the load is the same of the inverter.
4. Check that the incoming supply voltage is correspondent to the rated voltage of the inverter.
5. Check that the communication needs option card or not.

1.2.3 Environment

Check as followings before the actual installation and usage:

1. Check that the ambient temperature of the inverter is below 50℃. If exceeds, derate

3% for every additional 1℃. Additionally, the inverter can not be used if the ambient temperature is above 60℃. Note: for the cabinet inverter, the ambient temperature means the air temperature inside the cabinet.
2. Check that the ambient temperature of the inverter in actual usage is above -10℃. If not, add heating facilities. Note: for the cabinet inverter, the ambient temperature means the air temperature inside the cabinet.
3. Check that the altitude of the actual usage site is below 1000m. If exceeds, derate 1% for every additional 100m.
4. Check that the humidity of the actual usage site is below 90% and condensation is not allowed. If not, add additional protection inverters.
5. Check that the actual usage site is away from direct sunlight and foreign objects cannot enter the inverter. If not, add additional protective measures.
6. Check that there is no conductive dust or flammable gas in the actual usage site. If not, add additional protection to inverters.

1.2.4 Installation confirmation

Check as followings after the installation:

1. Check that the load range of the input and output cables meet the need of actual load.
2. Check that the accessories of the inverter are correctly and properly installed. The installation cables should meet the needs of every component (including input chokes, input filters, output chokes, output filters, DC choke, braking unit and braking resistor.)
3. Check that the inverter is installed on non-flammable materials and the calorific accessories (chokes and braking resistors) are away from flammable materials.
4. Check that all control cables and power cables are run separately and the rotation complies with EMC requirement.
5. Check that all grounding systems are properly grounded according to the requirements of the inverters.
6. Check that the free space during installation is sufficient according to the

instructions in user manual.
7. Check that the installation conforms to the instructions in user manual. The drive must be installed in a vertical position.
8. Check that the external connection terminals are tightly fastened and the torque is appropriate.
9. Check that there are no screws, cables and other conductive items left in the inverter. If not, get them out.

1.2.5 Basic commission

Complete the basic commissioning as followings before actual utilization:

1. Select the motor type, set correct motor parameters and select control mode of the inverter according to the actual motor parameters.
2. Auto-tune. If possible, disconnected from the motor load to start dynamic auto-tune. Or if not, static auto-tune is available.
3. Adjust acceleration/deceleration time according to actual running of load.
4. Commission the device via jogging and check that the rotation direction is as required. If not, change the rotation direction by changing the wiring of motor.
5. Set all control parameters and then operate.

1.3 Designed Standards for Implementation

- IEC/EN 61800-5-1: 2007 Adjustable speed electrical power drive systems safety requirements.
- IEC/EN 61800-3: 2004/ +A1: 2012 Adjustable speed electrical power drive systems-Part 3: EMC product standard including specific test methods.

II. Product

This manual offers a brief introduction of the installation connection for E600 series

inverters, parameters setting and operations, and should therefore be properly kept. Please contact manufacturer or dealer in case of any malfunction during application.

2.1 Product model naming rule

E600 – 0007 S2

Input power type:
S2 means 1-phase 230V
T3 means 3-phase 400V

Motor power

Relation

Mark	0007	0015	……
Motor power (kW)	0.75	1.5	……

Product series

2.2 Function naming rule

Q2 U5 F2 AG01 B1 R3

Filter	R3	EMC C3 level filter	Note 1
Braking type	B1	Dynamic braking	Note 2
Keypad panel	AG03	AG LED keypad in English	Note 3
Communication	F2	Terminal interface is adopted for Modbus	Note 4
Certificate	U5	UL+ CE	Note 5
Structure code	Q2	Q2 structure	

Note:

1. E600 series has two kinds of buit-in filter, R3 is tested with 25m motor cable conforming to standard EMC C3 grade, R5 is tested with 10m unshielded motor cable conforming to EMC C3 grade.
2. Braking unit is standard for 3-phase 400V and optional for 1-phase 230V.
3. Local keypad

Structure	Code	Contents

Q1~Q2	AG01	Chinese version
	AG03	English version
E4~E6	AF01	Chinese version without potentiometer
	AF03	English version without potentiometer

Remote keypad

Keypad code	Contents
A621	A6 Chinese version without potentiometer
A622	A6 Chinese version with potentiometer
A623	A6 English version without potentiometer
A624	A6 English version with potentiometer
AA21	AA Chinese version without potentiometer
AA23	AA English version without potentiometer
AA25	AA Chinese and English version without potentiometer
AD21	AD English version without potentiometer
AD23	AD Chinese version without potentiometer

4. Communication

Communication code	Contents
F2	Modbus

5. Certificate

Certificate code	Contents
U1	CE
U5	UL+CE
U8	CE+STO
U9	CE+UL+STO

Note:

Please refer to STO manual for STO instruction

2.3 Nameplate

Taking for instance the E600 series 0.75kW inverter with 1-phase input, its nameplate is illustrated as Fig 2-3.

1Ph: single-phase input; 230V, 50/60Hz: input voltage range and rated frequency.

3Ph: 3-phase output; 4.5A, 0.75kW: rated output current and power;

0.50～650.0Hz: ouput frequency range

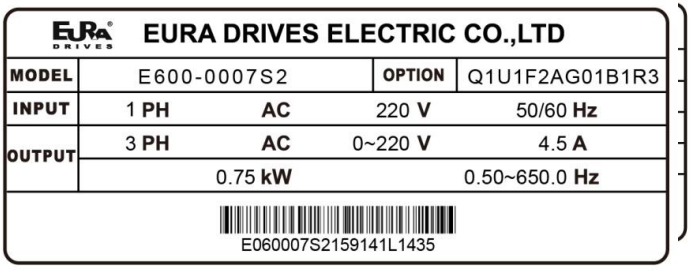

2.4 Product appearance

2.4.1 Appearance

The external structure of E600 series inverter is plastic housings. Wall hanging type is adopted. Good poly-carbon materials are adopted through die-stamping for plastic housing with nice form, good strength and toughness.

Taking E600-0030T3 for instance, the external appearance and structure are shown as in

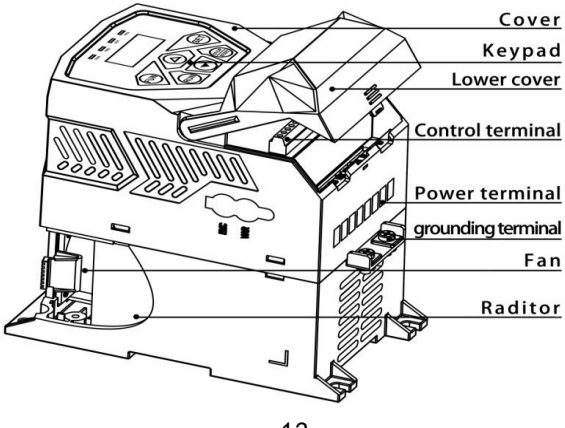

below Fig.

2.4.2 Interface

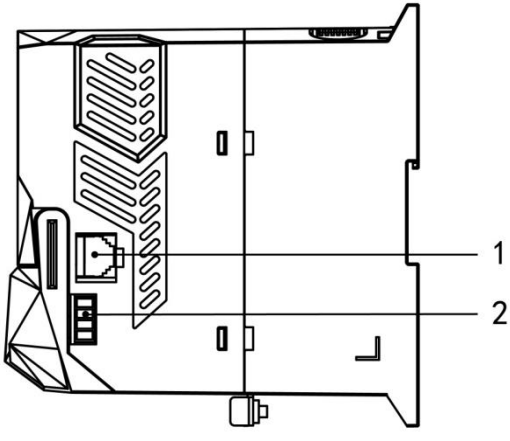

Table 2-1 E600 interface introduction

Structure / No.	Content
	Q1/Q2 structure
1	8-core net cable remote keypad interface
2	RS-485 communication (A+,B-)

2.5 Technical Specifications

Table2-2 **Technical Specifications for E600 Series Inverters**

	Items	Contents
Input	Rated Voltage Range	3-phase 380-480V (+10%, -15%) note 1 1-phase 220-240V ±15%
	Rated Frequency	50/60Hz, Frequency ±5%
Output	Rated Voltage Range	3-phase 0-INPUT (V)
	Frequency Range	0.50～650.0Hz
Control Mode	Carrier Frequency	0.8-6K; Mfr's value: 3K
	Input Frequency Resolution	Digital setting: 0.01Hz, analog setting: max frequency * 0.2%
	Control Mode	Induction motor: VVVF
	Start Torque	1HZ 100%
	Overload Capacity	150% rated current, 60 seconds.
	Torque Elevating	Manual Torque Promotion includes 1-20 curves.

	V/F Curve	3 kinds of modes: beeline type, n-th power type(1.5 th power, 1.8 th power, 1.9th power, square) and under-defined VVVF curve.
	Startup mode	Start directly
	DC Braking	DC braking frequency: 0.20-50.00 Hz, braking time: 0.00~30.00s
	Jogging Control	Jogging frequency range: min frequency~ max frequency, jogging acceleration/deceleration time: 0.1~3000s
	Auto Circulating Running and multi-stage speed running	Terminals control can realize 15-stage speed running.
	Built-in PID adjusting	Easy to realize a system for process closed-loop control
	Auto voltage regulation (AVR)	When source voltage changes, the modulation rate can be adjusted automatically, so that the output voltage is unchanged.
Operation Function	Frequency Setting	Potentiometer or external analog signal (0～5V, 0～10V, 0～20mA, 4～20mA); keypad (▲ / ▼ keys, terminal external control logic and PC/PLC)
	Start/Stop Control	Terminal control, keypad control or communication control.
	Running Command Channels	3 kinds of channels from keypad panel, control terminal and MODBUS.
	Frequency Source	Frequency sources: given digit, given analog voltage, given analog current and given MODBUS
	Accessorial frequency Source	0：Memory of digital given 1：External analog AI1 3：Stage speed adjusting 4：PID adjusting
Optional	Built-in EMI filter, built-in braking unit	
Protection Function	Input under-voltage, DC over-voltage, over-current, inverter over-load, motor over-load, over heat, analog disconnected protection, etc.	
Display	Output frequency, rotate-speed (rpm), output current, output voltage, DC-link voltage, PID feedback, PID setpoint, types of fault, and parameters setting; LED indicators showing the working status of inverter.	
Environment Conditions	Equipment Location	In an indoor location, Prevent exposure from direct sunlight, Free from dust, tangy caustic gases, flammable gases, steam or the salt-contented, etc.
	Environment Temperature	-10℃～+40℃
	Environment Humidity	Below 90% (no water-bead coagulation)
	Vibration Strength	Below 0.5g (acceleration)
	Height above sea level	1000m or below
Protection level	IP20	
Applicable Motor	0.4～22kW	

III. Keypad panel

Two kinds of controllers (single line of LCD and LED segment display) are available for E600 series inverters. Refer to note for Fig3-1.

3.1 Panel Illustration

3.1.1 LED local keypad

The panel covers three sections: data display section, status indicating section and keypad operating section, as shown in Fig. 3-1.

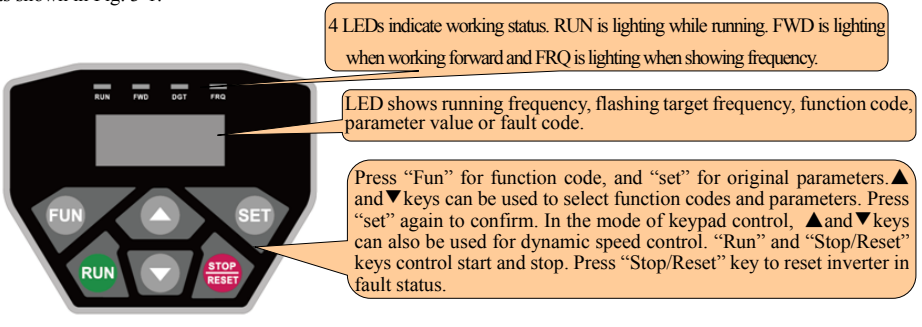

Fig.3-1 Operation Panel

3.1.2 LED remote keypad

The panel covers three sections: data display section, status indicating section and keypad operating section, as shown in Fig. 3-2.

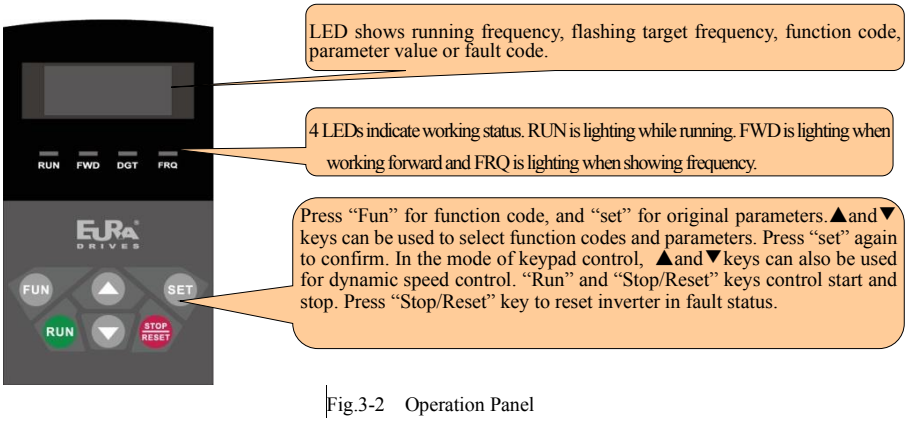

Fig.3-2 Operation Panel

3.1.3 Single line of LCD keypad

The panel covers three sections: data display section, status indicating section and keypad operating section, as shown in Fig 3-3.

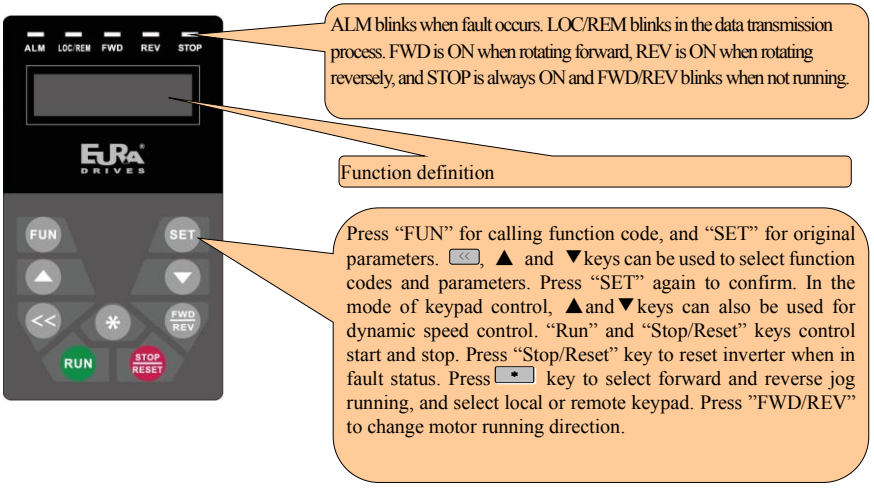

Fig.3-3 Operation Panel

Note：

Local panels cannot be pulled out. Please select AA or A6 control panel to realize remote control, which is connected by 8-core telephone cable.

3.2 Panel structure

1. LED remote keypad

Fig.3-4 Operation Panel Structure

2.Structure size (Unit: mm)

Code	A	B	C	D	H	Opening size
AA	76	52	72	48	24	73*49
A6	124	74	120	70	26	121*71

3.Single line of LCD keypad

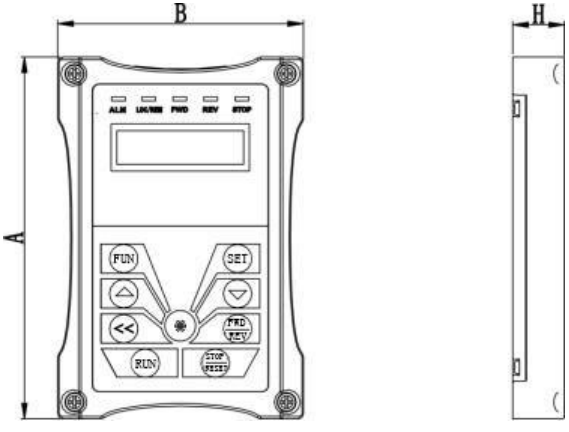

Fig.3-5 LCD Keypad Structure

4. Structure size (Unit: mm)

Code	Name	A	B	H
AD21/AD23	Single line of LCD keypad	140	95	20

5. Panel mounting structure diagram

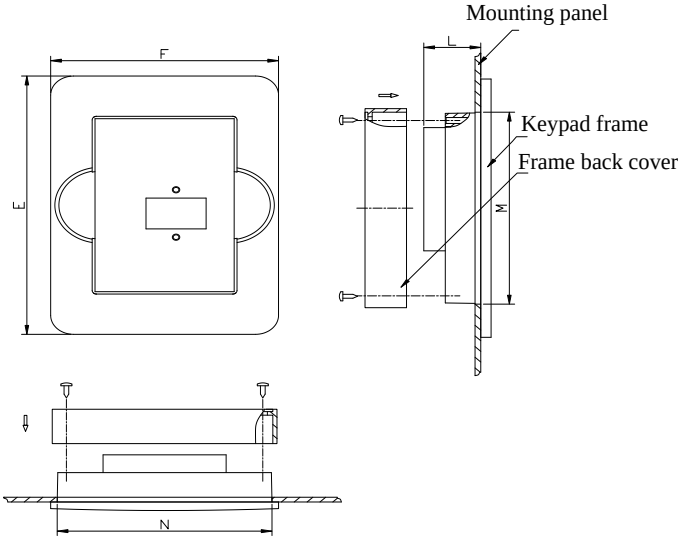

Fig.3-6 Panel mounting structure

6.Panel mounting size (Unit: mm)

Code	Keypad panel size			Opening size	
	E	F	L	N	M
AA	109	80	20	75	81
A6	170	110	22	102	142

7.Port of control panel

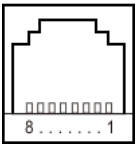

Fig.3-7 Port of control panel diagram

Pins	1	2	3	4	5	6	7	8
8 core	Potentiometer	5V	Grounding	Grounding	Signal 1	Signal 2	Signal 3	Signal 4

Note: The interface of control board should be completely consistent with the interface of the keypad panel, so the line sequence should also be the same.

8.The default remote-control wire length is 1m. The length of remote-control wire can be custom-made by users. If on the occasion of strong interference or the length is longer than 3m, please put a magnetic ring on the wire to avoid interference.

3.3 Panel Operating

All keys on the panel are available for user. Refer to Table 3-3 for their functions.

Table 3-3 Uses of Keys

Keys	Names	Remarks
Fun	Fun	To call function code and switch over display mode.
Set	Set	To call and save data.
▲	Up	To increase data (speed control or setting parameters)
▼	Down	To decrease data (speed control or setting parameters)
Run	Run	To start inverter;
Stop/reset	Stop or reset	To stop inverter; to reset in fault status; to change function codes in a code group or between two code groups.

3.4 Parameters Setting

This inverter has numerous function parameters, which the user can modify to effect different modes of operation control. User needs to realize that if user sets password valid (F107=1), user's password must be entered first if parameters are to be set after power off or protection is effected, i.e., to call F100 as per the mode in Table 3-4 and enter the correct code. User's password is invalid before delivery, and user could set corresponding parameters without entering password.

Table 3-4 Steps for Parameters Setting

Steps	Keys	Operation	Display
1	Fun	Press "Fun" key to display function code	F100
2	▲ or ▼	Press "Up" or "Down" to select required function code	F114
3	Set	To read data set in the function code	5.0
4	▲ or ▼	To modify data	9.0
5	Set	To display corresponding function code after saving the set data	F100
	Fun	To display the current target frequency	25.00

The above-mentioned step should be operated when inverter is in stop status.

3.5 Function Codes Switchover in/between Code-Groups

It has 11 sections as indicated in Table 3-3.

Table 3-5 Function Code Partition

Group Name	Function Code Range	Group Name	Function Code Range
Basic Parameters	F1	Timing control and protection function protection function	F7
Run Control Mode	F2	Parameters of the motor	F8
Multi-functional input/output terminal	F3	Communication function	F9
Analog signals and pulse of input/output	F4	PID parameter setting	FA
Multi-stage speed parameters	F5	Parameters display	H0
Subsidiary function	F6		

As parameters setting costs time due to numerous function codes, such function is specially designed as "Function Code Switchover in a Code Group or between Two Code-Groups" so that parameters setting become convenient and simple.

Press "Fun" key so that the keypad controller will display function code. If press "▲" or "▼" key then, function code will circularly keep increasing or decreasing by degrees within the group; if press the "stop/reset" key again, function code will change circularly between two code groups when operating the "▲" or "▼" key.

e.g. when function code shows F111 and DGT indicator is on, press "▲"/ "▼" key, function code will keep increasing or decreasing by degrees within F100～F160; press "stop/reset" key again, DGT indicator will be

off. When pressing "▲"/ "▼" key, function codes will change circularly among the 11 code-groups, like F211, F311…FA11, F111…, Refer to Fig 3-7 (The sparkling "50.00" is indicated the corresponding target frequency values).

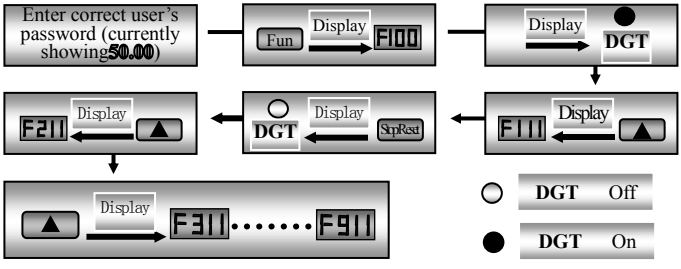

Fig 3-7 Switch over in a Code Group or between Different Code-Groups

3.6 Panel Display

Table 3-6 Items and Remarks Displayed on the Panel

Items	Remarks
HF-0	This Item will be displayed when you press "Fun" in stopping status, which indicates jogging operation is valid. But HF-0 will be displayed only after you change the value of F132.
-HF-	It stands for resetting process and will display target frequency after reset.
OC, OC1, OE, OL1, OL2, OH, LU, CE, STO	Fault code, indicating "over-current OC", "over-current OC1", "over-voltage", "inverter over-load", "motor over-load" "over-heat", "under-voltage for input", "communication error " , STO respectively.
AErr, EP, nP, Err5	Analog line disconnected, inverter under-load, pressure control, PID parameters are set wrong,
ESP	During two-line/three line running mode, "stop/reset" key is pressed or external emergency stop terminal is closed, ESP will be displayed.
oPEn	When oPEn terminal is invalid, inverter will trip into oPEn protection.
F152	Function code (parameter code).
10.00	Indicating inverter's current running frequency (or rotate speed) and parameter setting values, etc.
50.00	Sparkling in stopping status to display target frequency.
A100, U100, u540	Output current (100A) and output voltage (100V) and bus voltage(540V).
b*.*	PID feedback value is displayed.
o*.*	PID given value is displayed.
L***	Linear speed is displayed.
H ***	Radiator temperature is displayed.

IV. Installation & Connection

4.1 Installation

Inverter should be installed vertically, as shown in Fig 4-1.
Sufficient ventilation space should be ensured in its surrounding.

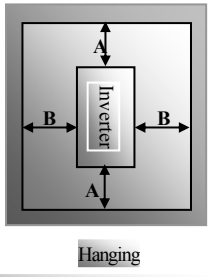

Fig 4-1 Installation Sketch

Clearance dimensions (recommended) are available from Table 4-1 for installing the inverter.

Table 4-1 Clearance Dimensions

Model	Clearance Dimensions	
Hanging	A≥150mm	B≥100mm

4.2 Connection

- In case of 3-phase input, connect L1/R、L2/S、L3/T terminals (L1/R and L2/S terminals for single-phase) with power source from network and ⏚/PE/E to earthing, U, V and W terminals to motor.
- Motor shall have to be ground connected. Or else electrified motor causes interference.

Power terminals sketch of Q1 inverter

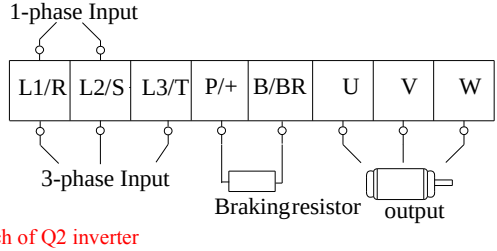

Power terminals sketch of Q2 inverter

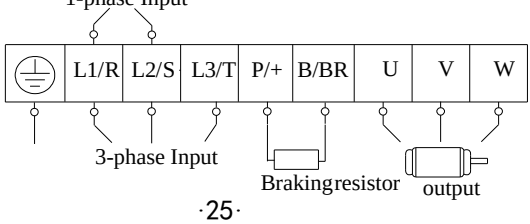

(The figure is only sketch, terminals order of practical products may be different from the above-mentioned figure.)

Introduction of terminals of power loop

Terminals	Terminal Marking	**Terminal Function Description**
Power Input Terminal	L1/R, L2/S, L3/T	Input terminals of three-phase 400V AC voltage (L1/R and L2/S terminals for 1-phase)
Output Terminal	U, V, W	Inverter power output terminal, connected to motor.
Grounding Terminal	PE/⏚	Inverter grounding terminal.
Rest Terminal	P/+, B/BR	External braking resistor.

4.3 Functions of control terminals

The key to operate the inverter is to operate the control terminals correctly and flexibly. Certainly, the control terminals are not operated separately, and they should match corresponding settings of parameters. This chapter describes basic functions of the control terminals. The users may operate the control terminals by combining relevant contents hereafter about “Defined Functions of the Terminals”.

Wiring for control loop as follows:

TA	TB	TC	DO1	24V	CM	DI1	DI2	DI3	DI4	10V	AI1	GND	AO1
GND	+5V	A+	B-										
SR1	SR2	24V	FB	CM									

SR1, SR2, 24V, FB, CM is optional for Q2 structure for STO function.

Table 4-3 Functions of Control Terminals

Terminal	Type	Description	Function	
DO1	Output signal	Multifunctional output terminal 1	When the token function is valid, the value between this terminal and CM is 0V; when the inverter is stopped, the value is 24V.	The functions of output terminals shall be defined per manufacturer’s value. Their initial state may be changed through changing function codes.
TA TB TC		Relay contact	TC is a common point, TB-TC are normally closed contacts, TA-TC are normally open contacts. The contact capacity is 3A 250VAC/30VDC , 10A/125VAC.	
10V	Analog power supply	Self contained power supply	Internal 10V self-contained power supply of the inverter provides power to the inverter. When used externally, it can only be used as the power supply for voltage control signal, with current restricted below 20mA.	
AI1	Input Signal	Voltage /current analog input port	When analog speed control is adopted, the voltage or current signal is input through this terminal. The range of voltage input is 0~5V or 0~10V ,and the current input is 0～20mA, the input resistor is 50Ω, and grounding: GND. If the input is 4～20mA, it can be realized by setting	

			F400=2. The voltage or current signal can be chosen by coding switch. The default setting of AI1 is 0~10V.	
GND		Self-contained Power supply Ground	Ground terminal of external control signal (voltage control signal or current source control signal) is also the ground of 10V power supply of this inverter.	
24V	Power supply	Control power supply	Power: 24±1.5V, grounding is CM; current is restricted below 200mA for external use.	
DI1	Digital input control terminal	Jogging terminal	When this terminal is valid, the inverter will have jogging running. The jogging function of this terminal is valid under both at stopped and running status.	The functions of input terminals shall be defined per manufacturer's value. Other functions can also be defined by changing function codes.
DI2		External Emergency Stop	When this terminal is valid, "ESP" malfunction signal will be displayed.	
DI3		"FWD" Terminal	When this terminal is valid, inverter will run forward.	
DI4		"REV" Terminal	When this terminal is valid, inverter will run reversely.	
GND	485 communication terminals	Grounding of differential signal	Grounding of differential signal	
5V		Power of differential signal	Power of differential signal	
A+		Positive polarity of differential signal	Standard: TIA/EIA-485(RS-485) Communication protocol: Modbus Communication rate: 1200/2400/4800/9600/19200/38400/57600bps	
B-		Negative polarity of Differential signal		

Wiring for digital input terminals:

Generally, shield cable is adopted and wiring distance should be as short as possible. When active signal is adopted, it is necessary to take filter measures to prevent power supply interference. Mode of contact control is recommended.

Digital input terminals are only connected by source electrode (NPN mode) or by drain electrode (PNP mode). If NPN mode is adopted, please turn the toggle switch to the end of "NPN".

Wiring for control terminals as follows:

1. Wiring for positive source electrode (NPN mode).

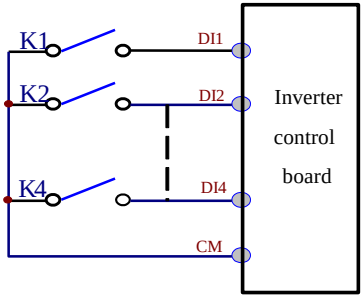

2. Wiring for active source electrode

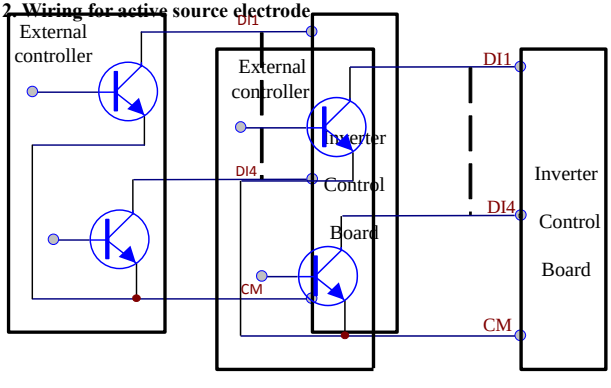

If digital input control terminals are connected by drain electrode, please turn the toggle switch to the end of "PNP". Wiring for control terminals as follows:

3. Wiring for positive drain electrode (PNP mode)

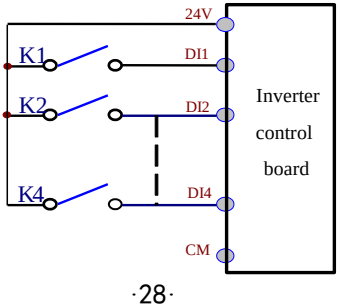

4. Wiring for active drain electrode (PNP mode)

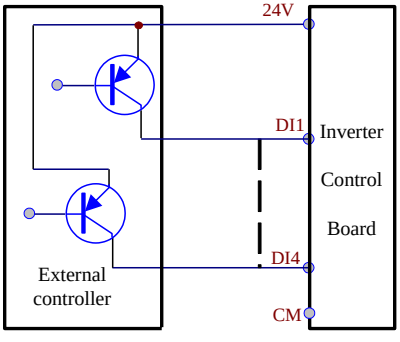

Wiring by source electrode is a mode most in use at present. Wiring for control terminal is connected by source electrode, user should choose wiring mode according to requirement.

Instructions of choosing NPN mode or PNP mode:

1. There is a toggle switch J7 near to control terminals. Please refer to Fig 3-2.
2. When turning J7 to “NPN”, DI terminal is connected to CM.
When turning J7 to “PNP”, DI terminal is connected to 24V.

Fig 4-2 Toggle Switch J7

4.4 Measurement of main circuit voltages, currents and powers

Since the voltages and currents on the inverter power supply and output sides include harmonics, measurement data depends on the instruments used and circuits measured. When instruments for commercial frequency are used for measurement, measure the following circuits with the recommended instruments.

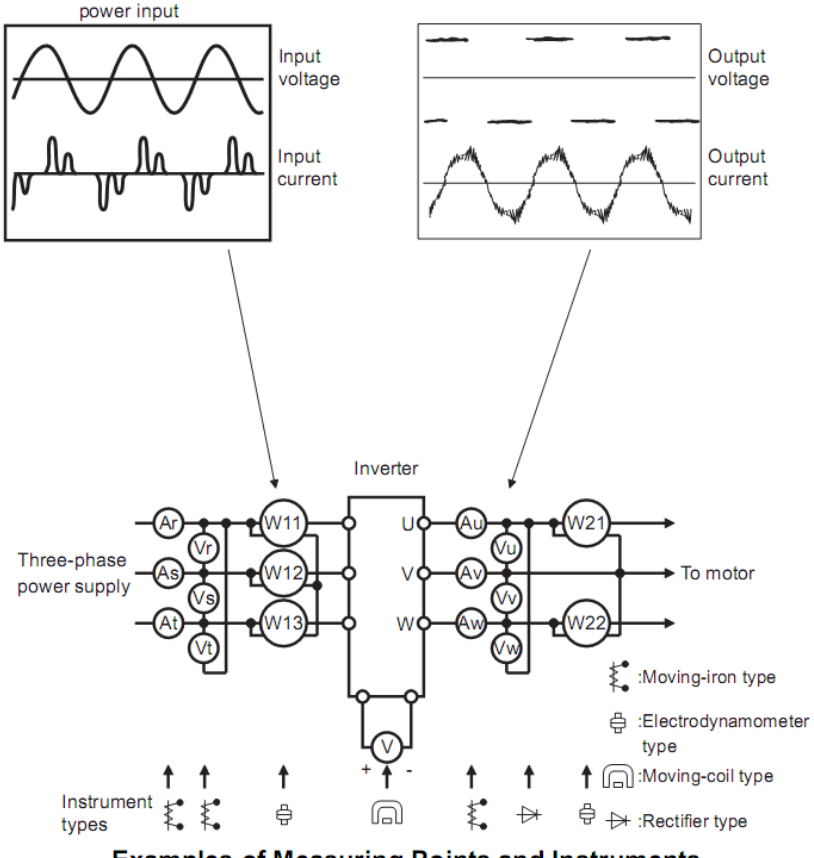

Examples of Measuring Points and Instruments

Item	Measuring Point	Measuring Instrument	Remarks (Reference Measurement Value)

Power supply voltage V1	Across R-S,S-T, T-R	Moving-iron type AC voltmeter	400V±15%, 230V±15%
Power supply side current I1	R, S, and T line currents	Moving-iron type AC voltmeter	
Power supply side power P1	At R, S and T, and across R-S, S-T and T-R	Electrodynamic type single-phase wattmeter	P1=W11+W12+W13 (3-wattmeter method)
Power supply side power factor Pf1	Calculate after measuring power supply voltage, power supply side current and power supply side power.[Three phase power supply] $Pf1=\frac{P1}{\sqrt{3}V1\times I1}\times 100\%$		
Output side voltage V2	Across U-V, V-W and W-U	Rectifier type AC voltmeter (Moving-iron type cannot measure)	Difference between the phases is within ±1% of the maximum output voltage.
Output side current I2	U, V and W line currents	Moving-iron type AC Ammeter	Current should be equal to or less than rated inverter current. Difference between the phases is 10% or lower of the rated inverter current.
Output side power P2	U, V, W and U-V, V-W,W-U	Electrodynamic type single-phase wattmeter	P2 = W21 + W22 2-wattmeter method
Output side power factor Pf2	Calculate in similar manner to power supply side power factor: $Pf2=\frac{P2}{\sqrt{3}V2\times I2}\times 100\%$		
Converter output	Across P+（P）and -(N)	Moving-coil type (such as multi-meter)	DC voltage, the value is $\sqrt{2}\times V1$
Power supply of control PCB	Across 10V-GND	Moving-coil type (such as multi-meter)	DC10V±0.2V
	Across 24V-CM	Moving-coil type (such as multi-meter)	DC24V±1.5V
Analog output AO1	Across AO1-GND	Moving-coil type (such as multi-meter)	Approx. DC10V at max frequency.
Alarm signal	Across TA/TC Across TB/TC	Moving-coil type (such as multi-meter)	<Normal> <Abnormal> Across TA/TC: Discontinuity Continuity Across TB/TC: Continuity Discontinuity

4.5 Wiring Recommended

Inverter Model	Lead Section Area(mm^2)
E600-0004S2	1.5
E600-0007S2	2.5
E600-0015S2	2.5
E600-0022S2	4.0
E600-0007T3	1.5
E600-0015T3	2.5
E600-0022T3	2.5
E600-0030T3	2.5
E600-0040T3	2.5
E600-0055T3	4.0
E600-0075T3	4.0
E600-0110T3	6.0
E600-0150T3	10
E600-0185T3	16
E600-0220T3	16

4.6 Lead section area of protect conductor (grounding wire)

Lead section area S of U,V,W (mm^2)	Min lead section area of ⏚/⏚/PE/E(mm2)
S≤16	S
16＜S≤35	16
35＜S	S/2

4.7 Overall Connection and “Three- Line” Connection

* Refer to next figure for overall connection sketch for E600 series inverters. Wiring mode is available for various terminals whereas not every terminal needs connection when applied.

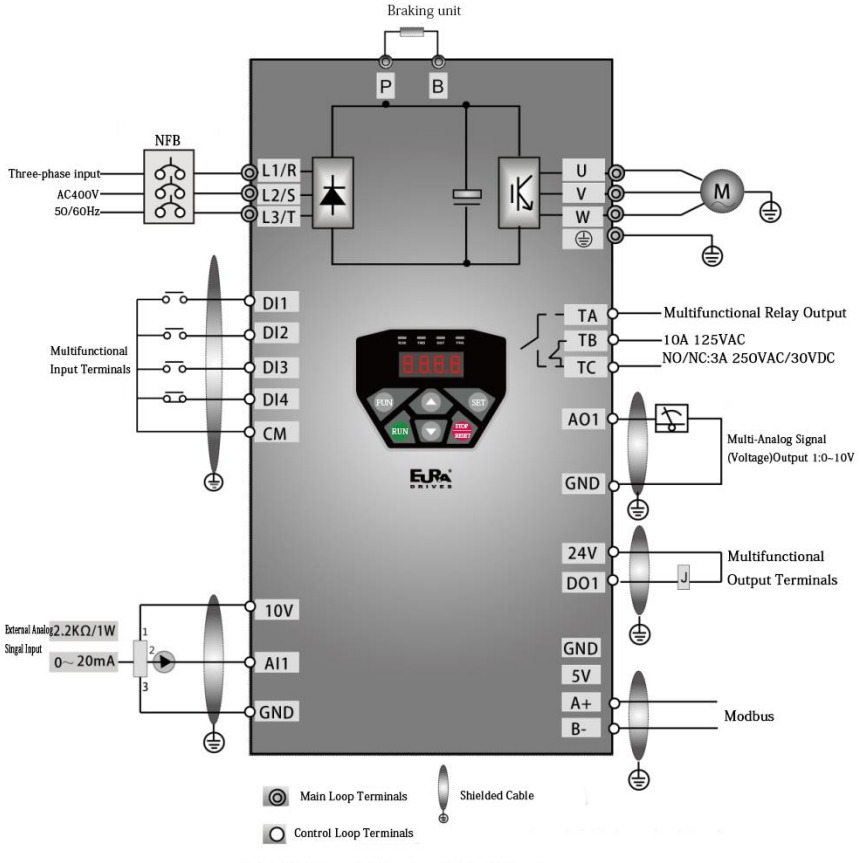

Basic Wiring Diagram for Three-phase AC drives(NPN type)

Note:

1. Please only connect power terminals L1/R and L2/S with power grid for single-phase inverters.
2. 485 communication port has built-in standard MODBUS communication protocol. Communication port is on the right side of inverter.
3. The contact capacity is 10A/125VAC. NO/NC: 3A 250VAC/30VDC.

4.8 Basic methods of suppressing the noise

The noise generated by the drive may disturb the equipment nearby. The degree of disturbance is dependent

on the drive system, immunity of the equipment, wiring, installation clearance and earthing methods.

4.8.1 Noise propagation paths and suppressing methods

① Noise categories

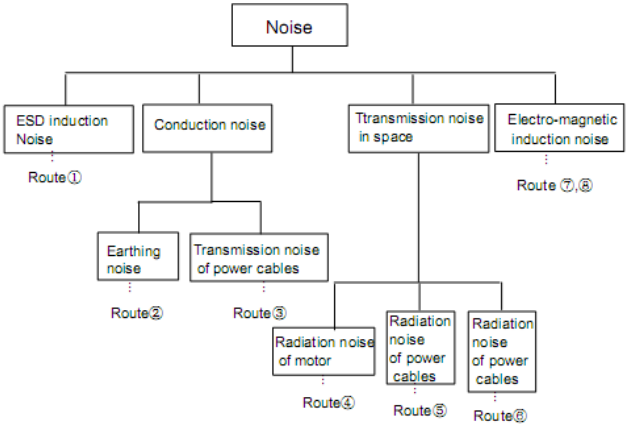

② Noise propagation paths

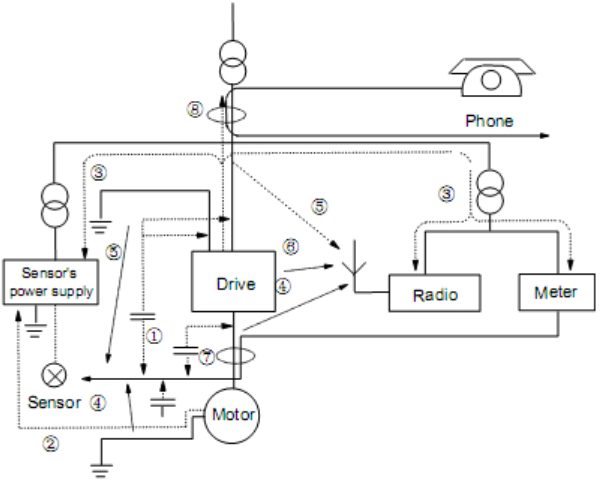

③Basic methods of suppressing the noise

Noise emission paths	Actions to reduce the noise

②	When the external equipment forms a loop with the drive, the equipment may suffer nuisance tripping due to the drive's earth leakage current. The problem can be solved if the equipment is not grounded.
③	If the external equipment shares the same AC supply with the drive, the drive's noise may be transmitted along its input power supply cables, which may cause nuisance tripping to other external equipment. Take the following actions to solve this problem: Install noise filter at the input side of the drive, and use an isolation transformer or line filter to prevent the noise from disturbing the external equipment.
④⑤⑥	If the signal cables of measuring meters, radio equipment and sensors are installed in a cabinet together with the drive, these equipment cables will be easily disturbed. Take the actions below to solve the problem: (1) The equipment and the signal cables should be as far away as possible from the drive. The signal cables should be shielded and the shielding layer should be grounded. The signal cables should be placed inside a metal tube and should be located as far away as possible from the input/output cables of the drive. If the signal cables must cross over the power cables, they should be placed at right angle to one another. (2) Install radio noise filter and linear noise filter (ferrite common-mode choke) at the input and output of the drive to suppress the emission noise of power lines. (3) Motor cables should be placed in a tube thicker than 2mm or buried in a cement conduit. Power cables should be placed inside a metal tube and be grounded by shielding layer
①⑦⑧	Don't route the signal cables in parallel with the power cables or bundle these cables together because the induced electro-magnetic noise and induced ESD noise may disturb the signal cables. Other equipment should also be located as far away as possible from the drive. The signal cables should be placed inside a metal tube and should be placed as far away as possible from the input/output cables of the drive. The signal cables and power cables should be shielded cables. EMC interference will be further reduced if they could be placed inside metal tubes. The clearance between the metal tubes should be at least 20cm.

4.8.2 Field Wire Connections

Control cables, input power cables and motor cables should be installed separately, and enough clearance should be left among the cables, especially when the cables are laid in parallel and the cable length is big. If the signal cables must go through the power cables, they should be vertical to each other.

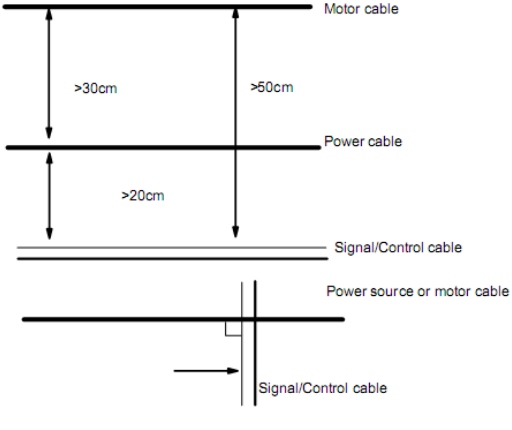

Generally, the control cables should be shielded cables and the shielding

metal net must be connected to the metal enclosure of the drive by cable clamps.

4.8.3 Earthing

Independent earthing poles (best)

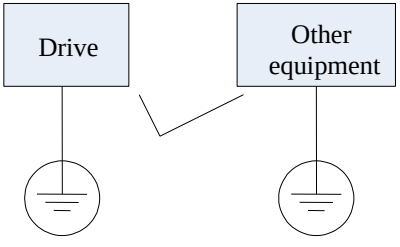

Shared earthing pole (good)

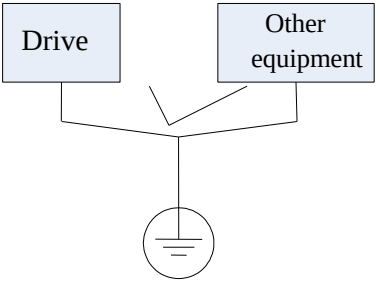

Shared earthing cable (not good)

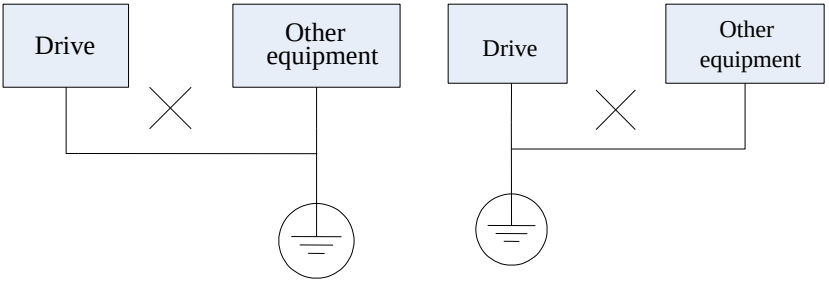

Note:

1. In order to reduce the earthing resistance, flat cable should be used because the high frequency impedance of flat cable is smaller than that of round cable with the same CSA.
2. If the earthing poles of different equipment in one system are connected together, then the leakage current will be a noise source that may disturb the whole system. Therefore, the drive's earthing pole should be separated with the earthing pole of other equipment such as audio equipment, sensors and PC, etc.
3. Earthing cables should be as far away from the I/O cables of the equipment that is sensitive to noise, and also should be as short as possible.

4.8.4 Leakage current

Leakage current may flow through the drive's input and output capacitors and the motor's capacitor. The leakage current value is dependent on the distributed capacitance and carrier wave frequency. The leakage current includes ground leakage current and the leakage current between lines.

Ground leakage current

The ground leakage current can not only flow into the drive system, but also other equipment via earthing cables. It may

cause the leakage current circuit breaker and relays falsely activated. The higher the drive's carrier wave frequency, the bigger the leakage current, also, the longer the motor cable, the greater the leakage current,

Suppressing methods:

Reduce the carrier wave frequency, but the motor noise may be louder;

Motor cables should be as short as possible;

The drive and other equipment should use leakage current circuit breaker designed for protecting the product against high-order harmonics/surge leakage current;

Leakage current between lines

The line leakage current flowing through the distribution capacitors of the drive out side may cause the thermal relay falsely activated, especially for the drive whose power is lower than 7.5kW. When the cable is longer than 50m, the ratio of leakage current to motor rated current may be increased that can cause the wrong action of external thermal relay very easily.

Suppressing methods:

Reduce the carrier wave frequency, but the motor noise may become louder;

Install reactor at the output side of the drive.

In order to protect the motor reliably, it is recommended to use a temperature sensor to detect the motor's temperature, and use the drive's over-load protection device (electronic thermal relay) instead of an external thermal relay.

4.8.5 Electrical installation of the drive

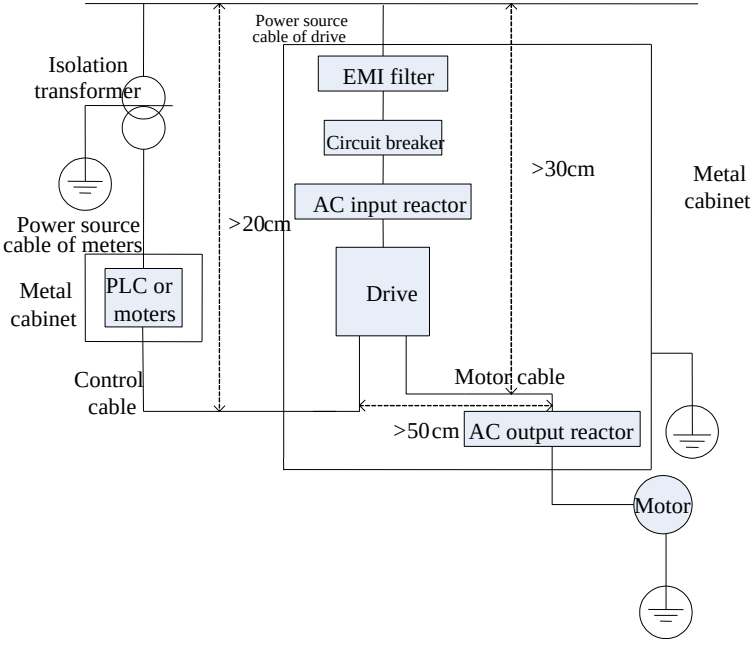

Note:

·Motor cable should be earthed at the drive side, if possible, the motor and drive should be earthed separately;

·Motor cable and control cable should be shielded . The shield must be earthed and avoid entangling at cable end to improve high frequency noise immunity.

·Assure good conductivity among plates, screw and metal case of the drive; use tooth-shape washer and conductive installation plate;

4.8.6 Application of Power Line Filter

Power source filter should be used in the equipment that may generate strong EMI or the equipment that is sensitive to the external EMI. The power source filter should be a two-way low pass filter through which only 50Hz current can flow and high frequency current should be rejected.

Function of power line filter

The power line filter ensures the equipment can satisfy the conducting emission and conducting sensitivity in EMC standard. It can also suppress the radiation of the equipment.

Common mistakes in using power cable filter

1. Too long power cable

The filter inside the cabinet should be located near to the input power source. The length of the power cables should be as short as possible.

2. The input and output cables of the AC supply filter are too close

The distance between input and output cables of the filter should be as far apart as possible, otherwise the high frequency noise may be coupled between the cables and bypass the filter. Thus, the filter will become ineffective.

3. Bad earthing of filter

The filter's enclosure must be earthed properly to the metal case of the drive. In order to be earthed well, make use of a special earthing terminal on the filter's enclosure. If you use one cable to connect the filter to the case, the earthing is useless for high frequency interference. When the frequency is high, so is the impedance of cable, hence there is little bypass effect. The filter should be mounted on the enclosure of equipment. Ensure to clear away the insulation paint between the filter case and the enclosure for good earthing contact.

4.8.7 Safety capacitor jumper

After the leakage breaker is configured, please remove the ground jumper screw (left side of the drive) of the safety capacitor (EMC) and put safety capacitor (EMC) on ground.

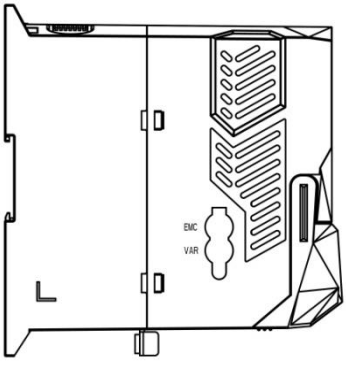

Note: varistor (VAR) is reserved.

V. Operation and Simple Running

This chapter defines and interprets the terms and nouns describing the control, running and status of the inverter. Please read it carefully. It will be helpful to your correct operation.

5.1 Basic conception

5.1.1 Control mode

E600 inverter support V/F control (F106=2)

5.1.2 Mode of torque compensation

Under V/F control mode, E600 inverter has three kinds of torque compensation modes: Linear compensation (F137=0); Square compensation (F137=1); User-defined multipoint compensation (F137=2);

5.1.3 Mode of frequency setting

Please refer to F203~F207 for the method for setting the running frequency of the E600 inverter.

5.1.4 Mode of controlling for running command

The channel for inverter to receive control commands (including start, stop and jogging, etc) contains three modes: 1. Keypad (keypad panel) control; 2. External terminal control; 3. Communication control.
The modes of control command can be selected through the function codes F200 and F201.

5.1.5 Operating status of inverter

When the inverter is powered on, it may have four kinds of operating status: stopped status, programming status, running status, and fault alarm status. They are described in the following:

Stopped status

If re-energize the inverter (if “auto-startup after being powered on” is not set) or decelerate the inverter to stop, the inverter is at the stopping status until receiving control command. At this moment, the running status indicator on the keypad goes off, and the display shows the display status before power down.

Programming status

Through keypad panel, the inverter can be switched to the status that can read or change the function code parameters. Such a status is the programming status.

There are numbers of function parameters in the inverter. By changing these parameters, the user can realize different control modes.

Running status

The inverter at the stopped status or fault-free status will enter running status after having received operation command.

The running indicator on keypad panel lights up under normal running status.

Fault alarm status

The status under which the inverter has a fault and the fault code is displayed.

Fault codes mainly include: OC, OE, OL1, OL2, OH, LU, PF1 and PF0 representing “over current”, “over voltage”, “inverter overload”, “motor overload”, “overheat”, “input under-voltage”, “input phase loss”, and “output phase loss” respectively.

For trouble shooting, please refer to Appendix I to this manual, “Trouble Shooting”.

5.2 Keypad panel and operation method

Keypad panel (keypad) is a standard part for configuration of E600 inverter. Through keypad panel, the user may carry out parameter setting, status monitoring and operation control over the inverter. Both keypad panel and display screen are arranged on the keypad controller, which mainly consists of three sections: data display section, status indicating section, and keypad operating section. There are two types of keypad controller (LED and four-line LCD) for inverter. For details, please refer to Chapter II of this manual, “Keypad panel”.

It is necessary to know the functions and how to use the keypad panel. Please read this manual carefully before operation.

5.2.1 Method of operating the keypad panel

(1) Operation process of setting the parameters through keypad panel

A three-level menu structure is adopted for setting the parameters through keypad panel of inverter, which enables convenient and quick searching and changing of function code parameters.

Three-level menu: Function code group (first-level menu) → Function code (second-level menu) → Set value of each function code (third-level menu).

(2) Setting the parameters

Setting the parameters correctly is a precondition to give full play of inverter performance. The following is the introduction on how to set the parameters through keypad panel.

LED keypad operating procedures:

① Press the “Fun” key, to enter programming menu.

② Press the key “Stop/Reset” or <<, the DGT lamp goes out. Press ▲ and ▼, the function code will change within the function code group. The first number behind F displayed on the panel is 1, in other words, it displays F1××at this moment.

③ Press the key “Stop/Reset” or <<, again, the DGT lamp lights up, and the function code will change within the code group. Press ▲ and ▼ to change the function code to F113; press the “Set” key to display 50.00; while press ▲ and ▼ to change to the need frequency.

④ Press the “Set” key to complete the change.

5.2.2 Switching and displaying of status parameters

Under stopped status or running status, LED digitron and single-line LCD of inverter can display status parameters of the inverter. Actual parameters displayed can be selected and set through function codes F131 and F132. Through the “Fun” or << key, it can switch over repeatedly and display the parameters of stopped status or running status. The followings are the description of operation method of displaying the parameters under stopped status and running status.

(1) Switching of the parameters displayed under stopped status

Under stopped status, inverter has several parameters of stopped status, which can be switched over repeatedly and displayed with the keys “Fun” and “Stop/Reset”. These parameters are displayed: keypad jogging, target rotary speed, PN voltage, PID feedback value, temperature, PID given value and count value. Please refer to the description of function code F132.

(2) Switching of the parameters displayed under running status

Under running status, several parameters of running status can be switched over repeatedly and displayed with the keys “Fun”. These parameters are displayed: output rotary speed, output current, output voltage, PN voltage, PID feedback value, temperature, count value, linear speed and PID given value. Please refer to the description of function code F131.

5.2.3 Operation process of simple running

Table 5-1 Brief Introduction to Inverter Operation Process

Process	Operation	Reference
Installation and operation environment	Install the inverter at a location meeting the technical specifications and requirements of the product. Mainly take into consideration the environment conditions (temperature, humidity, etc) and heat radiation of the inverter, to check whether they can satisfy the requirements.	See Chapters I, II, III, IV.
Wiring of the inverter	Wiring of input and output terminals of the main circuit; wiring of grounding; wiring of switching value control terminal, analog terminal and communication interface, etc.	See Chapter IV.
Checking before getting energized	Make sure that the voltage of input power supply is correct; the input power supply loop is connected with a breaker; the inverter has been grounded correctly and reliably; the power cable is connected to the power supply input terminals of inverter correctly (R/L1, S/L2 terminals for single-phase power grid, and R/L1, S/L2, and T/L3 for three-phase power grid); the output terminals U, V, and W of the inverter are connected to the motor correctly; the wiring of control terminals is correct; all the external switches are preset correctly; and the motor is under no load (the mechanical load is disconnected from the motor).	See Chapters I～IV
Checking immediately after energized	Check if there is any abnormal sound, fuming or foreign flavor with the inverter. Make sure that the display of keypad panel is normal, without any fault alarm message. In case of any abnormality, switch off the power supply immediately.	See Appendix 1 and Appendix 2.
Inputting the parameters indicated on the motor's nameplate correctly, and measuring the motor's parameters.	Make sure to input the parameters indicated on the motor nameplate correctly, and study the parameters of the motor. The users shall check carefully, otherwise, serious problems may arise during running. Before initial running with vector control mode, carry out tuning of motor parameters, to obtain accurate electric parameters of the motor controlled. Before carrying out tuning of the parameters, make sure to disconnect the motor from mechanical load, to make the motor under entirely no load status. It is prohibited to measure the parameters when the motor is at a running status.	See description of parameter group F800~F830
Setting running control parameters	Set the parameters of the inverter and the motor correctly, which mainly include target frequency, upper and lower frequency limits, acceleration/deceleration time, and direction control command, etc. The user can select corresponding running control mode according to actual applications.	See description of parameter group.
Checking under no load	With the motor under no load, start the inverter with the keypad or control terminal. Check and confirm running status of the drive system. Motor's status: stable running, normal running, correct rotary direction, normal acceleration/deceleration process, free from abnormal vibration, abnormal noise and foreign flavor. Inverter' status: normal display of the data on keypad panel, normal	See Chapter V.

	running of the fan, normal acting sequence of the relay, free from the abnormalities like vibration or noise. In case of any abnormality, stop and check the inverter immediately.	
Checking under with load	After successful test run under no load, connect the load of drive system properly. Start the inverter with the keypad or control terminal, and increase the load gradually. When the load is increased to 50% and 100%, keep the inverter run for a period respectively, to check if the system is running normally. Carry out overall inspection over the inverter during running, to check if there is any abnormality. In case of any abnormality, stop and check the inverter immediately.	
Checking during running	Check if the motor is running stably, if the rotary direction of the motor is correct, if there is any abnormal vibration or noise when the motor is running, if the acceleration/deceleration process of the motor is stable, if the output status of the inverter and the display of keypad panel is correct, if the blower fan is run normally, and if there is any abnormal vibration or noise. In case of any abnormality, stop the inverter immediately, and check it after switching off the power supply.	

5.3 Illustration of basic operation

Illustration of inverter basic operation: we hereafter show various basic control operation processes by taking a 5.5kW inverter that drives a 5.5kW three-phase asynchronous AC motor as an example.

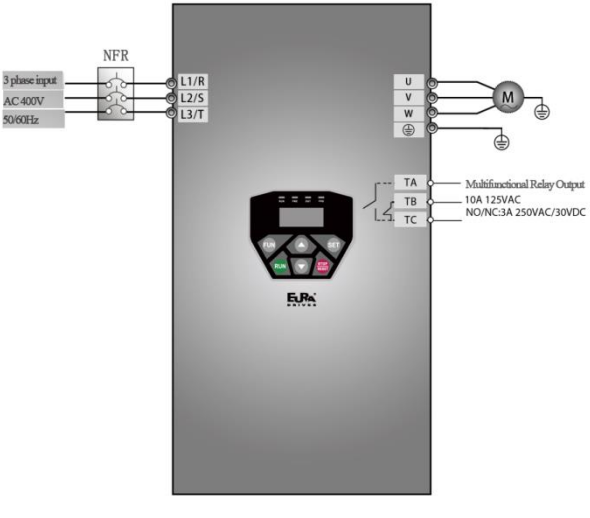

Figure 5-1 Wiring Diagram

The parameters indicated on the nameplate of the motor are as follows: 4 poles; rated power, 5.5kW; rated voltage, 400V; rated current, 12.0A; rated frequency 50.00HZ; and rated rotary speed, 1440rpm.

5.3.1 Operation process of frequency setting, start, forward running and stop with keypad panel

(1) Connect the wires in accordance with Figure 5-1. After having checked the wiring successfully, switch on the air switch, and power on the inverter.

(2) Press the “Fun” key, to enter the programming menu.

(3) Set functional parameters of the inverter:

Function code	Values
F111	50.00
F200	0
F201	0
F202	0
F203	0

(5) Press the “Run” key, to start the inverter;

(6) During running, current frequency of the inverter can be changed by pressing ▲ or ▼;

(7) Press the “Stop/Reset” key once, the motor will decelerate until it stops running;

(8) Switch off the air switch, and power off the inverter.

5.3.2 Operation process of setting the frequency with keypad panel, and starting, forward and reverse running, and stopping inverter through control terminals

(1) Connect the wires in accordance with Figure 5-2. After having checked the wiring successfully, switch on the air switch, and power on the inverter;

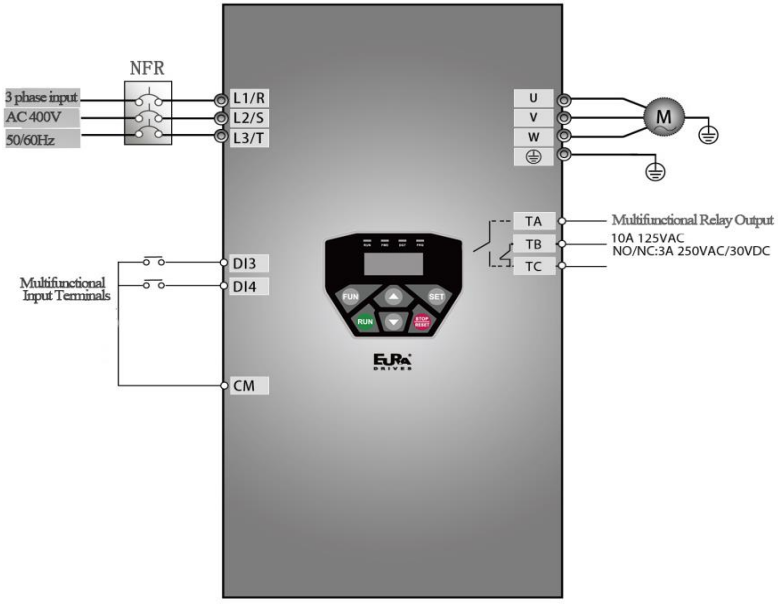

Figure 5-2 Wiring Diagram

(2) Press the "Fun" key, to enter the programming menu.

(3) Set functional parameters of the inverter:

Function code	● Values
F111	● 50.00
F203	● 0
F208	● 1

(4) Close the switch DI3, the inverter starts forward running;

(5) During running, current frequency of the inverter can be changed by pressing ▲ or ▼;

(6) During running, switch off the switch DI3, then close the switch DI4, the running direction of the motor will be changed (Note: The user should set the dead time of forward and reverse running F120 on the basis of the load. If it was too short, OC protection of the inverter may occur.)

(7) Switch off the switches DI3 and DI4, the motor will decelerate until it stops running;

(8) Switch off the air switch, and power off the inverter.

5.3.3 Operation process of jogging operation with keypad panel

Jogging operation includes two ways.

The first way is as below:

(1) Connect the wires in accordance with Figure 5-1. After having checked the wiring successfully, switch on the air switch, and power on the inverter;

(2) Press the “Fun” key, to enter the programming menu.

(3) Set functional parameters of the inverter:

LED keypad parameters setting:

Function code	Values
F124	5.00
F125	30
F126	30
F132	1
F202	0

(4) Press and hold the “Run” key until the motor is accelerated to the jogging frequency, and maintain the status of jogging operation.

(6) Release the “Run” key, and the motor will decelerate until jogging operation is stopped;

(7) Switch off the air switch, and power off the inverter.

The second way is as below:

(1) Connect the wires in accordance with Figure 5-1. After having checked the wiring successfully, switch on the air switch, and power on the inverter;

(2) Press the “Fun” key, to enter the programming menu.

(3) Set functional parameters of the inverter:

LED keypad parameters setting:

Function code	Values
F124	5.00
F125	30
F126	30
F132	1
F643	1

(4) When the keypad is LED, press and hold the “Run” key until the motor is accelerated to the jogging frequency, and maintain the status of jogging operation.

(5) Release the “Run” key. The motor will decelerate until jogging operation is stopped;

(7) Switch off the air switch, and power off the inverter.

5.3.4 Operation process of setting the frequency with analog terminal and controlling

the operation with control terminals

(1) Connect the wires in accordance with Figure 5-3. After having checked the wiring successfully, switch on the air switch, and power on the inverter. Note: 2K～5K potentiometer may be adopted for setting external analog signals. For the cases with higher requirements for precision, please adopt precise multiturn potentiometer, and adopt shielded wire for the wire connection, with near end of the shielding layer grounded reliably.

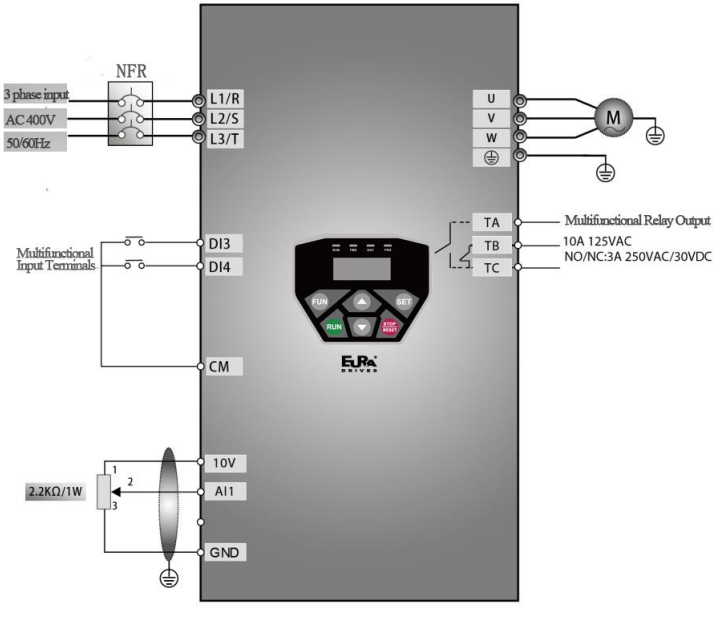

Figure 5-3 Wiring Diagram

(2) Press the "Fun" key, to enter the programming menu.

(3) Set functional parameters of the inverter:

Function code	Values
F203	1
F208	1

(4) There is a red two-digit coding switch SW1 near the control terminal block of E600 inverter, as shown in Figure 5-4. The function of coding switch is to select the voltage signal (0～5V/0～10V) or current signal(0～20mA). In actual application, select the analog input channel through F203. Turn switches 1 to ON and 2 to ON as illustrated in the figure, and select 0～10V input. Another switches states and mode of control speed are as table 5-2.

(5) Close the switch DI3, the motor starts forward running;
(6) During running process, switch off the switch DI3, then, close DI4, the running direction of the motor will be changed;
(7) Switch off the switches DI3 and DI4, the motor will decelerate until it stops running;
(8) Switch off the air switch, and power off the inverter.
(9) Analog output terminal AO1 can only output current signal, AO1 terminal can output voltage and current signal, the selecting switch is J5, please refer to Fig 5-5, the output relation is shown in table 5-1.

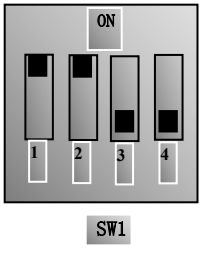

Fig 5-4

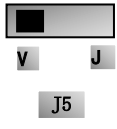

Fig 5-13

Table 5-2 The Setting of Coding Switch and Parameters in the Mode of Analog Speed Control

F203=1, channel AI1 is selected				
SW1 coding switch				
Coding Switch1	Coding Switch 2	Coding Switch 3	Coding Switch 4	Mode of Speed Control
ON	ON	OFF	OFF	0～10V
ON	OFF	OFF	OFF	0～5V
OFF	OFF	ON	ON	0～20mA

Table 5-4 The relationship between AO1 and J5 and F423

AO1 output		Setting of F423		
		0	1	2
J5	V	0～5V	0～10V	Reserved
	I	Reserved	0～20mA	4～20mA

VI. Function Parameters

6.1 Basic parameters

F100 User's Password	Setting range: 0～9999	Mfr's value: 0

·When F107=1 with valid password, the user must enter correct user's password after power on or fault reset if you intend to change parameters. Otherwise, parameter setting will not be possible, and a prompt "Err1" will be displayed on the LED keypad.

Relating function code: F107 Password valid or not F108 Setting user's password

F102 Inverter's Rated Current (A)		Mfr's value: Subject to inverter model
F103 Inverter Power (kW)		Mfr's value: Subject to inverter model
F104 Voltage level		Mfr's value: Subject to inverter model

· Rated current, rated power and voltage level can only be checked but cannot be modified.

F105 Software Edition No.	Setting range: 1.00～10.00	Mfr's value: Subject to inverter model

Software Edition No. can only be checked but cannot be modified.

F106 Control mode	Setting range: 2	Mfr's value: 2
F107 Password Valid or Not	Setting range: 0: invalid; 1: valid;2: invalid for communication	Mfr's value: 0
F108 Setting User's Password	Setting range: 0～9999	Mfr's value: 8

·When F107 is set to 0, the function codes can be changed without inputting the password.
When F107 is set to 1, the function codes can be changed only after inputting the user's password by F100.
When F107 is set to 2, the function codes can be changed by PC/PLC with no user's password is input by F100.
·The user can change "User's Password". The operation process is the same as those of changing other parameters.
· Input the value of F108 into F100, and the user's password can be unlocked.
Note: When password protection is valid, and if the user's password is not entered, F108 will display 0.

F109 Starting Frequency (Hz)	Setting range: 0.00～10.00	Mfr's value: 0.00
F110 Holding Time of Starting Frequency (S)	Setting range: 0.0～999.9	Mfr's value: 0.0

·The inverter begins to run from the starting frequency. If the target frequency is lower than starting frequency, F109 is invalid.
·The inverter begins to run from the starting frequency. After it keeps running at the starting frequency for the time as set in F110, it will accelerate to target frequency. The holding time is not included in acceleration/deceleration time.
·Starting frequency is not limited by the Min frequency set by F112. If the starting frequency set by F109 is lower than Min frequency set by F112, inverter will start according to the setting parameters set by F109 and F110. After inverter starts and runs normally, the frequency will be limited by frequency set by F111 and F112.
·Starting frequency should be lower than Max frequency set by F111.

Note: when speed track is adopted, F109 and F110 are invalid.

F111 Max Frequency (Hz)	Setting range: F113～650.0	Mfr's value: 50.00
F112 Min Frequency (Hz)	Setting range: 0.00～F113	Mfr's value: 0.50

· Max frequency is set by F111.
· Min frequency is set by F112.
· The setting value of min frequency should be lower than target frequency set by F113.
· The inverter begins to run from the starting frequency. During running process, if the given frequency is lower than min frequency, then inverter will stop.
Max/Min frequency should be set according to the nameplate parameters and running situations of motor. The motor is forbidden running at low frequency for a long time, or else motor will be damaged because of overheat.

F113 Target Frequency (Hz)	Setting range: F112～F111	Mfr's value: 50.00

·It shows the preset frequency. Under keypad speed control or terminal speed control mode, the inverter will run to this frequency automatically after startup.

F114 First Acceleration Time (S)	Setting range: 0.1～3000	Mfr's value: subject to inverter model
F115 First Deceleration Time (S)		
F116 Second Acceleration Time (S)		
F117 Second Deceleration Time (S)		
F277 Third Acceleration Time (S)		
F278 Third Deceleration Time (S)		
F279 Fourth Acceleration Time (S)		
F280 Fourth Deceleration Time (S)		

F119 is used to set the reference of setting accel/decel time.
· The Acceleration/Deceleration time can be chosen by multifunction digital input terminals F316~F319 and connecting DI terminal with CM terminal. Please refer to the instructions of multi-functional input terminals.
Note: when speed track is working, acceleration/deceleration time, min frequency and target frequency are invalid. After speed track is finished, inverter will run to target frequency according to acceleration/deceleration time.

F118 Turnover Frequency (Hz)	Setting range: 15.00～650.0	Mfr's value: 50.00

· Turnover frequency is the final frequency of V/F curve, and also is the least frequency according to the highest output voltage.
·Ordinarily turnover frequency is equal to motor rated frequency.
·When running frequency is lower than this value, inverter has constant-torque output. When running frequency exceeds this value, inverter has constant-power output.
Note: during the process of speed track, turnover frequency is invalid. After speed track is finished, this function code is valid.
The function code is associated with F810, any one of them can be set valid.

F119 The reference of setting accel/decel time	Setting range: 0: 0~50.00Hz 1: 0~max frequency 2: 0~target frequency	Mfr's value: 0

When F119=0, acceleration/ deceleration time means the time for inverter to accelerate/ decelerate from 0Hz (50Hz) to 50Hz (0Hz).
When F119=1, acceleration/ deceleration time means the time for inverter to accelerate/ decelerate from 0Hz (max frequency) to max frequency (0Hz).

When F119=2, acceleration/ deceleration time means the time for inverter to accelerate/ decelerate from 0Hz (target frequency) to target frequency (0Hz).

F120 Forward / Reverse Switchover dead-Time (S)	Setting range: 0.0～3000	Mfr's value: 0.0

· Within "forward/ reverse switchover dead-time", this latency time will be canceled upon receiving "stop" signal. This function is suitable for all the speed control modes except automatic cycle operation.
· This function can ease the current impact in the process of direction switchover.
Note: during the process of speed track, F120 is invalid. After speed track is finished, this function code is valid.

F122 Reverse Running Forbidden	Setting range: 0: invalid; 1: valid	Mfr's value: 0

When F122=1, inverter will only run forward no matter the state of terminals and the parameters set by F202.
Inverter will not run reverse and forward / reverse switchover is forbidden. If reverse signal is given, inverter will stop.
If reverse running locking is valid (F202=1), whatever speed track is valid or not, inverter has no output.

F123 Minus frequency is valid in the mode of combined speed control.	0：Invalid；1：valid	0

·In the mode of combined speed control, if running frequency is minus and F123=0, inverter will stop; if F123=1, inverter will run reverse at this frequency. (This function is controlled by F122.)

F124 Jogging Frequency (Hz)	Setting range: F112～F111	Mfr's value: 5.00
F125 Jogging Acceleration Time (S)	Setting range: 0.1～3000	Mfr's value: subject to inverter model
F126 Jogging Deceleration Time (S)		

·There are two types of jogging: keypad jogging and terminal jogging. LED keypad jogging is valid only under stopped status, LCD keypad jogging is valid under both running status and stopped status(F132 including of displaying items of keypad jogging should be set). Terminal jogging is valid under both running status and stopped status.

·Carry out jogging operation through the keypad referring to 5.3.3.

·In case of terminal jogging, make "jogging" terminal (such as DI1) connected to CM, and inverter will run to jogging frequency. The rated function codes are from F316 to F319.

Note: when jogging function is valid, speed track function is invalid.

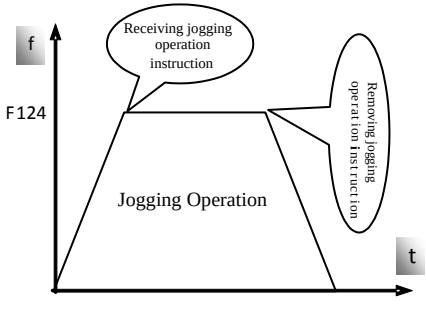

Figure 6-1 Jogging Operation

F127/F129 Skip Frequency A,B (Hz)	Setting range: 0.00～650.0	Mfr's value:0.00
F128/F130 Skip Width A,B (Hz)	Setting range: 0.00~2.50	Mfr's value: 0.00

· Systematic vibration may occur when the motor is running at a certain frequency. This parameter is set to skip this frequency.

·The inverter will skip the point automatically when output frequency is equal to the set value of this

parameter.

·"Skip Width" is the span from the upper to the lower limits around Skip Frequency. For example, Skip Frequency=20Hz, Skip Width=0.5Hz, inverter will skip automatically when output is between 19.5～20.5Hz.

·Inverter will not skip this frequency span during acceleration/deceleration.

Note: during the process of speed track, skip frequency function is invalid. After speed track is finished, this function is valid.

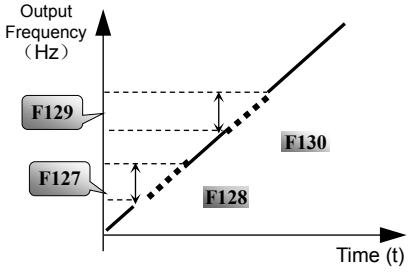

Figure 6-2 Skip Frequency

F131 Running Display Items	0－Current output frequency/function-code 1－Output rotary speed 2－Output current 4－Output voltage 8－PN voltage 16－PID feedback value 32－Temperature 64－Count values 256－PID given value 4096－ Output torque	Mfr's value: 0+1＋2＋4＋8=15

·Selection of one value from 1, 2, 4, 8, 16, 32, 64 and 128 shows that only one specific display item is selected. Should multiple display items be intended, add the values of the corresponding display items and take the total values as the set value of F131, e.g., just set F131 to be 19 (1+2+16) if you want to call "current output rotary speed", "output current" and "PID feedback value". The other display items will be covered.

·As F131＝511, all display items are visible, of which, "frequency/function-code" will be visible whether or not it is selected.

·Should you intend to check any display item of LED keypad, just press the "Fun" key for switchover.

·Whatever the value of F131 is set to, corresponding target frequency will flash under stopped status.

The units and representing methods for each physical quantity in LED keypad are displayed as below:

Target rotary speed is an integral number. If it exceeds 9999, add a decimal point to it.

Current display A *.*　Voltage display U***　Count value ****　Temperature H***

Linear speed L***. If it exceeds 999, add a decimal point to it. If it exceeds 9999, add two decimal points to it, and the like.

PID given value o*.*　PID feedback value b*.*

F132 Display items of stop	Setting range: 0: Frequency/function-code 1: Keypad jogging 2: Target rotary speed 4: PN voltage 8: PID feedback value 16: Temperature 32: Reserved 64: PID given value	Mfr's value: 0+2+4＝6
F133 Drive ratio of driven system	Setting range: 0.10～200.0	Mfr's value: 1.00
F134 Transmission-wheel radius	0.001～1.000 (m)	Mfr's value: 0.001

·Calculation of rotary speed and linear speed:

For example, If inverter's max frequency F111=50.00Hz, numbers of motor poles F804=4, drive ratio F133＝1.00, transmission-shaft radius R=0.05m, then

Transmission shaft perimeter: $2\pi r = 2\times3.14\times0.05=0.314$ (meter)

Transmission shaft rotary speed: 60× operation frequency/ (numbers of poles pairs × drive ratio) =60×50/ (2×1.00) =1500rpm

Endmost linear speed: rotary speed × perimeter=1500×0.314=471(meters/second)

F136 Slip compensation (%)	Setting range: 0～10	Mfr's value: 0

· Under V/F controlling, rotary speed of motor rotor will decrease as load increases. Be assured that rotor rotate speed is near to synchronization rotary speed while motor with rated load, slip compensation should be adopted according to the setting value of frequency compensation.

Note: during the process of speed track, slip compensation function is invalid. After speed track is finished, this function is valid.

F137 Modes of torque compensation	Setting range: 0: Linear compensation; 1: Square compensation; 2: User-defined multipoint compensation	Mfr's value: 0
F138 Linear compensation	Setting range: 1～20	Mfr's value: subject to inverter model
F139 Square compensation	Setting range: 1: 1.5 2: 1.8 3: 1.9 4: 2.0 5~6: Reserved	Mfr's value: 1

To compensate low-frequency torque controlled by V/F, output voltage of inverter while low-frequency should be compensated.

When F137=0, linear compensation is chosen and it is applied on universal constant-torque load;

When F137=1, square compensation is chose and it is applied on the loads of fan or water pump;

When F137=2, user-defined multipoint compensation is chosen and it is applied on the special loads of spin-drier or centrifuge;

This parameter should be increased when the load is heavier, and this parameter should be decreased when the load is lighter.

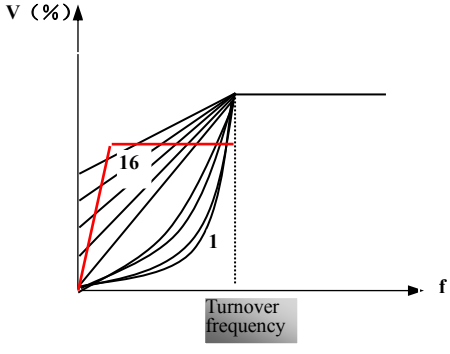

Fig 6-3 Torque Promotion

If the torque is elevated too much, motor is easy to overheat, and the current of inverter will be too high. Please check the motor while elevating the torque.

Note: during the process of speed track, F137 is invalid.

F140 Voltage compensation point frequency (Hz)	Setting range: 0.00～F142	Mfr's value: 1.00
F141 Voltage compensation point 1 (%)	Setting range: 0～30	Mfr's value: 0
F142 User-defined frequency point F2	Setting range: F140～F144	Mfr's value: 5.00
F143 User-defined voltage point V2	Setting range: 0～100%	Mfr's value: 13
F144 User-defined frequency point F3	Setting range: F142～F146	Mfr's value: 10.00
F145 User-defined voltage point V3	Setting range: 0～100%	Mfr's value: 24
F146 User-defined frequency point F4	Setting range: F144～F148	Mfr's value: 20.00
F147 User-defined voltage point V4	Setting range: 0～100%	Mfr's value: 45
F148 User-defined frequency point F5	Setting range: F146～F150	Mfr's value: 30.00
F149 User-defined voltage point V5	Setting range: 0～100%	Mfr's value: 63
F150 User-defined frequency point F6	Setting range: F148～F118	Mfr's value: 40.00
F151 User-defined voltage point V6	Setting range: 0～100%	Mfr's value: 81

AS shown in Fig6-3, when F317=0, VF curve compensation =Max (F138, F141)

When F137=1, VF curve compensation =Max (F139, F141)

When F137=2, VF curve compensation =Max (auto compensation, F141)

Note: F141 cannot be set to high, otherwise, inverter will easily trip into OH and OC.

Multi-stage V/F curves are defined by 12 parameters from F140 to F151.

The setting value of V/F curve is set by motor load characteristic.

Note: V1<V2<V3<V4<V5<V6，F1<F2<F3<F4<F5<F6.As low-frequency, if the setting voltage is too high, motor will overheat or be damaged. Inverter will be stalling or occur over-current protection.

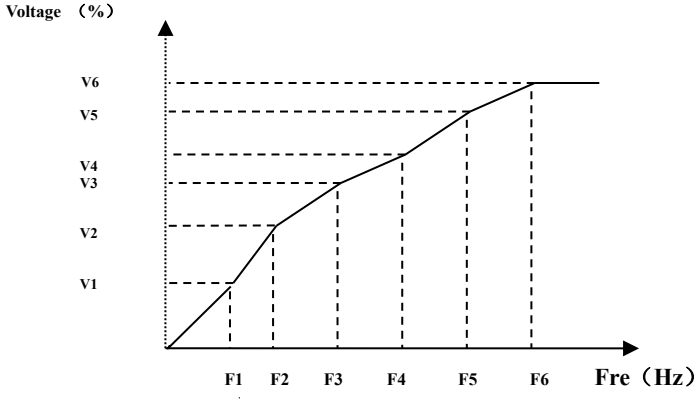

Fig 6-4 Polygonal-Line Type V/F

Note: during the process of speed track, polygonal-line V/F curve function is invalid. After speed track is finished, this function is valid.

F152 Output voltage corresponding to turnover frequency	Setting range: 10～100	Mfr's value: 100

This function can meet the needs of some special loads, for example, when the frequency outputs 300Hz and corresponding voltage outputs 200V (supposed voltage of inverter power supply is 400V), turnover frequency F118 should be set to 300Hz and F152 is set to（200÷400）×100=50. And F152 should be equal to 50.

Please pay attention to nameplate parameters of motor. If the working voltage is higher than rated voltage or the frequency is higher than rated frequency, motor would be damaged.

Note: during the process of speed track, slip compensation function is invalid. After speed track is finished, this function is valid.

F153 Carrier frequency setting	Setting range: subject to model	Mfr's value: subject to model

Carrier-wave frequency of inverter is adjusted by setting this code function. Adjusting carrier-wave may reduce motor noise, avoid point of resonance of mechanical system, decrease leakage current of wire to earth and the interference of inverter.

When carrier-wave frequency is low, although carrier-wave noise from motor will increase, the current leaked to the earth will decrease. The wastage of motor and the temperature of motor will increase, but the temperature of inverter will decrease.

When carrier-wave frequency is high, the situations are opposite, and the interference will raise.

When output frequency of inverter is adjusted to high frequency, the setting value of carrier-wave should be increased. Performance is influenced by adjusting carrier-wave frequency as below table:

Carrier-wave frequency	Low	→	High
Motor noise	Loud	→	Low
Waveform of output current	Bad	→	Good
Motor temperature	High	→	Low
Inverter temperature	Low	→	High
Leakage current	Low	→	High
Interference	Low	→	High

F154 Automatic voltage rectification	Setting range: 0: Invalid 1: Valid 2:Invalid during deceleration process	Mfr's value: 0

This function is enable to keep output voltage constant automatically in the case of fluctuation of input voltage, but the deceleration time will be affected by internal PI adjust. If deceleration time is forbidden being changed, please select F154=2.

When there is large difference between motor rated voltage and inverter input voltage, and the latter is greater than the former, please set F154=1.

F155 Digital accessorial frequency setting	Setting range: 0.00～F111	Mfr's value: 0.00
F156 Digital accessorial frequency polarity setting	Setting range: 0 ~ 1	Mfr's value: 0
F157 Reading accessorial frequency		
F158 Reading accessorial frequency polarity		

Under combined speed control mode, when accessorial frequency source is digital setting memory (F204=0), F155 and F156 are considered as initial set values of accessorial frequency and polarity (direction).

In the mode of combined speed control, F157 and F158 are used for reading the value and direction of accessorial frequency.

For example, when F203=1, F204=0. F207=1, the given analog frequency is 15Hz, inverter is required to run to 20Hz. In case of this requirement, user can push "UP" button to raise the frequency from 15Hz to 20Hz. User can also set F155=5Hz and F160=0 (0 means forward, 1 means reverse). In this way, inverter can be run to 20Hz directly.

F160 Reverting to manufacturer values	Setting range: 0: Invalid 1: Valid	Mfr's value: 0

·When there is disorder with inverter's parameters and manufacturer values need to be restored, set F160=1. After "Reverting to manufacturer values" is done, F160 values will be automatically changed to 0.

· "Reverting to manufacturer values" will not work for the function-codes marked "○"in the "change" column of the parameters table. These function codes have been adjusted properly before delivery. And it is recommended not to change them.

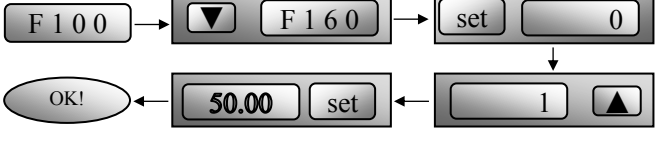

Figure 6-5 Reverting to manufacturer values

6.2 Operation Control

F200 Source of start command	Setting range: 0: Keypad command; 1: Terminal command; 2: Keypad＋Terminal; 3: MODBUS; 4: Keypad＋Terminal＋MODBUS	Mfr's value: 4
F201 Source of stop command	Setting range: 0: Keypad command; 1: Terminal command; 2: Keypad＋Terminal; 3: MODBUS; 4: Keypad＋Terminal＋MODBUS	Mfr's value: 4

· F200 and F201 are the resource of selecting inverter control commands.
· Inverter control commands include: starting, stopping, forward running, reverse running, jogging, etc.
·"Keypad command" refers to the start/stop commands given by the "Run" or "stop/reset" key on the keypad.
·"Terminal command" refers to the start/stop command given by the "Run" terminal defined by F316-F323.
·When F200=3 and F201=3, the running command is given by MODBUS.
·When F200=2 and F201=2, "keypad command" and "terminal command" are valid at the mean time, F200=4 and F201=4 are the same.

F202 Mode of direction setting	Setting range: 0: Forward running locking; 1: Reverse running locking; 2: Terminal setting 3: Keypad setting 4: Keypad setting and direction in memory	Mfr's value: 0

·The running direction is controlled by this function code together with other speed control mode which can set the running direction of inverter. When auto-circulation speed is selected by F500=2, this function code is not valid.
·When speed control mode without controlling direction is selected, the running direction of inverter is controlled by this function code, for example, keypad controls speed.

Direction given by F202	Direction given by other control mode	Running direction	remarks
0	0	0	0 means forward. 1 means reverse.
0	1	1	
1	0	1	
1	1	0	

When F202=3, the running direction can be changed by pressing FWD/REV key. After power off and repower on the inverter, the default running direction is forward.

When F202=4, the running direction can be changed by pressing FWD/REV key. The setting direction by keypad is in memory.

F203 Main frequency source X	Setting range: 0: Memory of digital given; 1: External analog AI1; 4: Stage speed control; 5: No memory of digital given; 9: PID adjusting; 10: MODBUS	Mfr's value: 0

· Main frequency source is set by this function code.

·0: Memory of digital given
Its initial value is the value of F113. The frequency can be adjusted through the key “up” or “down”, or through the “up”, “down” terminals.

“Memory of digital given” means after inverter stops, the target frequency is the running frequency before stop. If the user would like to save target frequency in memory when the power is disconnected, please set F220=1, i.e. frequency memory after power down is valid.

1: External analog AI1;
The frequency is set by analog input terminal AI1. The analog signal may be current signal (0-20mA or 4-20mA) or voltage signal (0-5V or 0-10V), which can be chosen by switch code. Please adjust the switch code according to practical situations, refer to fig 5-4 and table 5-2.
When inverters leave the factory, the analog signal of AI1 channel is DC voltage signal, the range of voltage is 0-10V. If 4-20mA current signal is needed, please set lower limit of analog input F400=2, which input resistor is 50 OHM. If some errors exist, please make some adjustments.

4: Stage speed control
Multi-stage speed control is selected by setting stage speed terminals F316-F319 and function codes of multi-stage speed section. The frequency is set by multi-stage terminal or automatic cycling frequency.

5: No memory of digital given
Its initial value is the value of F113. The frequency can be adjusted through the key “up” or “down”, or through the “up”, “down” terminals.
“No memory of digital given” means that the target frequency will restore to the value of F113 after stop no matter the state of F220.

9: PID adjusting

When PID adjusting is selected, the running frequency of inverter is the value of frequency adjusted by PID. Please refer to instructions of PID parameters for PID given resource, PID given numbers, feedback source, and so on.

10: MODBUS

The main frequency is given by MODBUS communication.

F204 Accessorial frequency source Y	Setting range: 0: Memory of digital given; 1: External analog AI1; 4: Stage speed control; 5: PID adjusting;	Mfr’s value: 0

· When accessorial frequency Y is given to channel as independent frequency, it has the same function with main frequency source X.
· When F204=0, the initial value of accessorial frequency is set by F155. When accessorial frequency controls speed independently, polarity setting F156 is not valid.
· When F207=1 or 3, and F204=0, the initial value of accessorial frequency is set by F155, the polarity of accessorial frequency is set by F156, the initial value of accessorial frequency and the polarity of accessorial frequency can be checked by F157 and F158.
· When the accessorial frequency is given by analog input (AI1), the setting range for the accessorial frequency is set by F205 and F206. See table 6-1 for combination details.
· Note: accessorial frequency source Y and main frequency source X can not use the same frequency given channel.

F205 reference for selecting accessorial	Setting range:	Mfr’s value: 0

frequency source Y range	0: Relative to max frequency; 1: Relative to main frequency X	
F206 Accessorial frequency Y range (%)	Setting range: 0～150	Mfr's value: 100

· When combined speed control is adopted for frequency source, F206 is used to confirm the relative object of the setting range for the accessorial frequency.

F205 is to confirm the reference of the accessorial frequency range. If it is relative to main frequency, the range will change according to the change of main frequency X.

F207 Frequency source selecting	Setting range: 0: X; 1: X+Y; 2: X or Y (terminal switchover); 3: X or X+Y (terminal switchover); 4: Combination of stage speed and analog 5: X-Y 6: X+Y-Y_{MAX}*50% 7: combination 1 of stage speed and digital	Mfr's value: 0

·Select the channel of setting the frequency. The frequency is given by combination of main frequency X and accessorial frequency Y.

·When F207=0, the frequency is set by main frequency source.

·When F207=1, X+Y, the frequency is set by adding main frequency source to accessorial frequency source. X or Y can be given by PID.

·When F207=2, main frequency source and accessorial frequency source can be switched over by frequency source switching terminal.

·When F207=3, main frequency given and adding frequency given(X+Y) can be switched over by frequency source switching terminal. X or Y can be given by PID.

·When F207=4, stage speed setting of main frequency source has priority over analog setting of accessorial frequency source (only suitable for F203=4 F204=1).

·When F207=5, X-Y, the frequency is set by subtracting accessorial frequency source from main frequency source. If the frequency is set by main frequency or accessorial frequency, PID speed control can be selected.

·When F207=6, X+Y-Y_{MAX}*50%, the frequency is given by both main frequency source and accessorial frequency source. X or Y can be given by PID. When F205=0, Y_{MAX}=F111*F206. When F205=1 , Y_{MAX}=X*F206.

·When F207=7, stage speed setting of main frequency source has priority over digital of accessorial frequency source. (only suitable for F203=4, F204=0).

Note:

1. When F203=4 and F204=1, the difference between F207=1 and F207=4 is that when F207=1, frequency source selecting is the addition of stage speed and analog, when F207=4, frequency source selecting is stage speed with stage speed and analog given at the same time. If stage speed given is canceled and analog given still exists, inverter will run by analog given.
2. Frequency given mode can be switched over by selecting F207. For example: switching PID adjusting and normal speed control, switching stage speed and analog given, switching PID adjusting and analog given, and so on.
3. The acceleration/deceleration time of stage speed is set by function code of corresponding stage speed time. When combined speed control is adopted for frequency source, the acceleration/deceleration time is set by F114 and F115.

4. The mode of automatic cycle speed control is unable to combine with other modes.
5. When F207=2 (main frequency source and accessorial frequency source can be switched over by terminals), if main frequency is not set to be under stage-speed control, accessorial frequency can be set to be under automatic cycle speed control (F204=5, F500=0). Through the defined switchover terminal, the control mode (defined by X) and automatic cycle speed control (defined by Y) can be freely switched.
6. When F207=6, F205=0 and F206=100, X+Y-Y_{MAX}*50%=X+Y-F111*50%, and if F207=6, F205=1 and F206=100, then X+Y-Y_{MAX}*50%=X+Y-X*50%.

F208 Terminal two-line/three-line operation control	Setting range: 0: No function 1: Two-line operation mode 1; 2: Two-line operation mode 2; 3: three-line operation mode 1; 4: three-line operation mode 2; 5: start/stop controlled by direction pulse	Mfr's value: 0

· **When selecting two-line type or three-line type), F200, F201 and F202 are invalid.**

· **Five modes are available for terminal operation control.**

Note: "FWD", "REV" and "X" are three terminals designated in programming DI1～DI4.

1: Two-line mode 1: this mode is the most popularly used two-line mode. The running direction of mode is controlled by FWD, REV terminals.

For example: "FWD" terminal-----"open": stop, "closed": forward running;

"REV" terminal-----"open": stop, "closed": reverse running;

"CM" terminal-----common port

K1	K2	Running command
0	0	Stop
1	0	Forward running
0	1	Reverse running
1	1	Stop

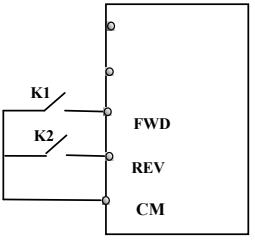

2. Two-line mode 2: when this mode is used, FWD is enable terminal, the direction is controlled by REV terminal.

For example: "FWD" terminal-----"open": stop, "closed": running;

"REV" terminal-----"open": forward running,

"closed": reverse running;

"CM" terminal-----common port

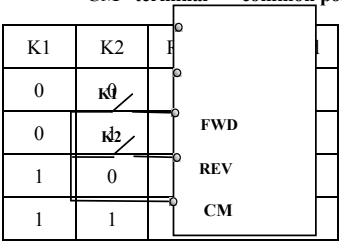

3. Three-line mode 1:

In this mode, X terminal is enable terminal, the direction is controlled by FWD terminal and REV terminal. Pulse signal is valid.

Stopping commands is enabled by opening X terminal.

SB3: Stop button

SB2: Forward button.

SB1: Reverse button.

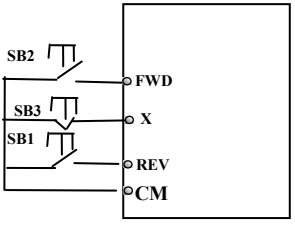

4. Three-line mode 2:

In this mode, X terminal is enable terminal, running command is controlled by FWD terminal. The running direction is controlled by REV terminal, and stopping command enable by opening X terminal.

SB1: Running button

SB2: Stop button

K1: direction switch. Open stands for forward running; close stands for reverse running.

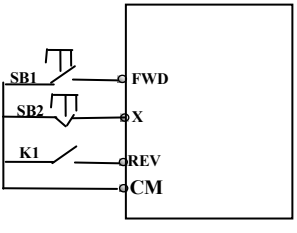

5. Start/stop controlled by direction pulse:

"FWD" terminal—(impulse signal: forward/stop)

"REV" terminal—(impulse signal: reverse/stop)

"CM" terminal—common port

Note: when pulse of SB1 triggers, inverter will run forward. When the pulse triggers again, inverter will stop running.

When pulse of SB2 triggers, inverter will run reverse. When the pulse triggers again, inverter will stop running.

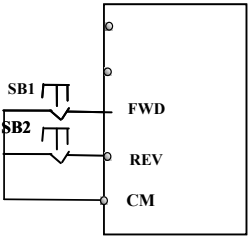

F209 Selecting the mode of stopping the motor	Setting range: 0: stop by deceleration time; 1: free stop 2: Stop by DC braking	Mfr's value: 0

When the stop signal is input, stopping mode is set by this function code:
F209=0: stop by deceleration time
Inverter will decrease output frequency according to setting acceleration/deceleration curve and decelerating time, after frequency decreases to 0, inverter will stop. This is often common stopping type. During the process of speed track, this function is invalid. And inverter will be forced to stop during this process.
F209=1: free stop
After stop command is valid, inverter will stop output. Motor will free stop by mechanical inertia.
When F209=2, after inverter receives stop command, inverter will stop from present frequency by DC braking. Please set F656, F603 and F605 correctly to avoid error.

F210 Frequency display accuracy	Setting range: 0.01～10.00	Mfr's value: 0.01

When inverter is in the running status, under keypad speed control, frequency display accuracy is set by F210 and the range is from 0.01 to 2.00. For example, when F210=0.5, ▲/▼ terminal is pressed at one time, frequency will increase or decrease by 0.5Hz.
This function is valid when inverter is in the running state.

F211 Speed of digital control (Hz/S)	Setting range: 0.01～100.0	Mfr's value: 5.00

When UP/DOWN terminal is pressed, frequency will change at the setting rate. The Mfr's value is 5.00Hz/s.

F212 Direction memory	Setting range: 0: Invalid 1: Valid	Mfr's value: 0

· This function is valid when three-line operation mode 1(F208=3) is valid.
· When F212=0, after inverter is stopped, reset and repowered on, the running direction is not memorized.
· When F212=1, after inverter is stopped, reset and repowered on, if inverter starts running but no direction signal, inverter will run according the memory direction.

F213 Auto-starting after repowered on	Setting range: 0: invalid; 1: valid	Mfr's value: 0
F214 Auto-starting after reset	Setting range: 0: invalid; 1: valid	Mfr's value: 0

Whether or not to start automatically after repowered on is set by F213
F213=1, Auto-starting after repowered on is valid. When inverter is power off and then powered on again, it will run automatically after the time set by F215 and according to the running mode before power-down. If F220=0 frequency memory after power-down is not valid, inverter will run by the setting value of F113.
F213=0, after repower-on, inverter will not run automatically unless running command is given to inverter.
·Whether or not to start automatically after fault resetting is set by F214
When F214=1, if fault occurs, inverter will reset automatically after delay time for fault reset (F217). After resetting, inverter will run automatically after the auto-starting delay time (F215).
If frequency memory after power-down (F220) is valid, inverter will run at the speed before power-down. Otherwise, inverter will run at the speed set by F113.
In case of fault under running status, inverter will reset automatically and auto-start. In case of fault under stopped status, the inverter will only reset automatically.
When F214=0, after fault occurs, inverter will display fault code, it must be reset by manually.

F215 Auto-starting delay time	Setting range: 0.1～3000.0	Mfr's value: 60.0

F215 is the auto-starting delay time for F213 and F214. The range is from 0.1s to 3000.0s.

F216 Times of auto-starting in case of repeated faults	Setting range: 0～5	Mfr's value: 0
F217 Delay time for fault reset	Setting range: 0.0～10.0	Mfr's value: 3.0
F219 EEPROM write operation	Setting range:0:enabled to write 1:prohibit writing	Mfr's value: 1

F216 sets the most times of auto-starting in case of repeated faults. If starting times are more than the setting value of this function code, inverter will not reset or start automatically after fault. Inverter will run after running command is given to inverter manually.

F217 sets delay time for fault reset. The range is from 0.0 to 10.0S which is time interval from fault to resetting.

When F219=0, the function code is modified by Modbus, the data will be saved in RAM and EEPROM. It means there is memory when power down.

For example: F114=5.0,

When F219=1, the value of F114 is modified to 1.0 by Modbus. After inverter power down and repower on, F114 will be 5.0.

When F219=0, the value of F114 is modified to 1.0 by Modbus. After inverter power down and repower on, F114 will be 1.0.

F219 cannot be initialized as inverter restores Mfr's value.

F220 Frequency memory after power-down	Setting range: 0: invalid; 1: valid	Mfr's value: 0

F220 sets whether or not frequency memory after power-down is valid.

This function is valid for F213 and F214. Whether or not to memory running state after power-down or malfunction is set by this function.

·The function of frequency memory after power-down is valid for main frequency and accessorial frequency that is given by digital. Because the digital given accessorial frequency has positive polarity and negative polarity, it is saved in the function codes F155 and F156.

F223 Main frequency coefficient	Setting range: 0.0～100.0	Mfr's value：100.0

Target frequency=main frequency*main frequency coefficient.

F224 when target frequency is lower than Min frequency	Setting range: 0: stop 1: run at min frequency	Mfr's value: 0

· F224=0, when target frequency is lower than Min frequency, inverter will stop.

· F224=1, when target frequency is lower than Min frequency, inverter will run at Min frequency.

Table 6-1 **Combination of Speed Control**

F203 \ F204	0. Memory of digital setting	1 External analog AI1	4 Terminal stage speed control	5 PID adjusting
0 Memory of Digital setting	○	●	●	●
1External analog AI1	●	○	●	●
4Terminal Stage speed control	●	●	○	●
5 Digital setting	○	●	●	●

9 PID adjusting	●	●	●	○
10 MODBUS	●	●	●	●

●: Inter-combination is allowable.

○: Combination is not allowable.

F277	Third Acceleration Time (S)	0.1-3000	Subject to inverter model
F278	Third Deceleration Time (S)		
F279	Fourth Acceleration Time (S)		
F280	Fourth Deceleration Time (S)		

6.3. Multifunctional Input and Output Terminals

6.3.1 Digital multifunctional output terminals

F300 Relay token output	Setting range: 0~59	Mfr's value: 1
F301 DO1 token output	Refer to table 6-2 for detailed instructions.	Mfr's value: 14

E600 inverter has one multifunctional relay output terminal.

Table 6-2 Instructions for digital multifunctional output terminal

Value	Function	Instructions
0	no function	Output terminal has no functions.
1	inverter fault protection	When inverter works wrong, ON signal is output.
2	over latent frequency 1	Please refer to instructions from F307 to F309.
3	over latent frequency 2	Please refer to instructions from F307 to F309.
4	free stop	Under free stop status, after stop command is given, ON signal is output until inverter completely stops.
5	In running status 1	Indicating that inverter is running and ON signal is output.
6	Reserved	Reserved
7	acceleration/deceleration time switchover	Indicating that inverter is in the status of acceleration/deceleration time switchover
10	inverter overload pre-alarm	When inverter is in over current status, if the accumulation time is more than inverter's overload protection time * F704, inverter outputs ON signal. After over current disappears or OL1 is enable, the signal output will stop.
11	motor overload pre-alarm	When motor is in over current status, if the accumulation time is more than motor's overload protection time * F705, inverter outputs ON signal. After over current disappears or OL2 is enable, the signal output will stop.
13	Inverter is ready to run	When inverter is powered on. Protection function is not in action and inverter is ready to run, then ON signal is output.
14	In running status 2	Indicating that inverter is running and ON signal is output. When inverter is running at 0HZ, it seems as the running status, and ON signal is output.
15	frequency arrival output	Indicating inverter runs to the setting target frequency, and ON signal is output. See F312.

16	overheat pre-alarm	When testing temperature reaches 80% of setting value, ON signal is output. When overheat protection occurs or testing value is lower than 80%of setting value, ON signal stops outputting.
17	over latent current output	When output current of inverter reaches the setting overlatent current, ON signal is output. See F310 and F311.
18	Analog line disconnection protection	Indicating inverter detects analog input lines disconnection, and ON signal is output. Please refer to F741.
20	Zero current detecting output	When inverter output current has fallen to zero current detecting value, and after the setting time of F755, ON signal is output. Please refer to F754 and F755.
21	Output controlled by communication address 2005H	1 means output is valid. 0 means output is invalid.
23	Output controlled by communication address 2007H	
24	Watchdog output token	Output signal is valid when inverter trips into Err6.
26	Communication reset	When faults occur, inverter will be reset by Modbus writing 9 to 0x2000.
32	Over-limit pressure token	Indicating the max limit value when PID adjusting is valid and negative feedback is selected, and feedback pressure is higher than max pressure set by F503
43	Communication timeout 2	When F907>0, and receiving the previous data, if after the time set by F907, the next data is not received, inverter will output communication timeout signal. The timeout signal will be cleared by this terminal, and after receiving correct data, inverter will accumulate time again.
45	Token output when lower than setting temperature	When temperature is lower or equal to 0℃, token output signal is valid. When temperature is higher than 0℃+2℃, token output is invalid.
59	oPEn	When drive trips into oPEn, the terminal is valid.

F304	S curve beginning stage proportion (%)	Setting range: 2.0～50.0	30.0
F305	S curve ending stage proportion (%)	Setting range: 2.0～50.0	30.0
F306	Accel/decel mode	Setting range: 0：Straight-line 1: S curve	0

Please refer to Fig 5-9 about S curve accel/decel:

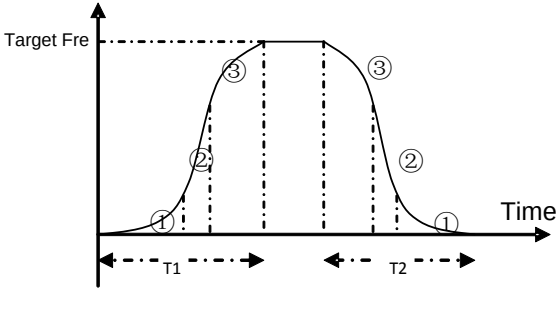

Fig 6-9 S curve acceleration /deceleration

T1 is the acceleration time from present frequency to target frequency.
T2 is the deceleration time from present frequency to target frequency.
During the acceleration process, in the ① stage, the acceleration slope is bigger gradually, in the ② stage, the acceleration slope is constant, in the ③ stage, the acceleration slope is weaker gradually.

F307 Characteristic frequency 1 (Hz)	Setting range: F112～F111	Mfr's value: 10
F308 Characteristic frequency 2 (Hz)		Mfr's value: 50
F309 Characteristic frequency width (%)	Setting range: 0～100	Mfr's value: 50

When F300=2, 3, F301=2, 3 and F302=2, 3 and token characteristic frequency is selected, this group function codes set characteristic frequency and its width. For example: setting F301=2, F307=10, F309=10, when frequency is higher than F307, DO1 outputs ON signal. When frequency is lower than (10-10*10%）=9Hz, DO1 outputs OFF signal.

F310 Characteristic current (A)	Setting range: 0～5000.0	Mfr's value: Rated current
F311 Characteristic current width (%)	Setting range: 0～100	Mfr's value: 10

When F300=17 and F301=17 and F302=17 and token characteristic current is selected, this group function codes set characteristic current and its width.
For example: setting F301=17, F310=100, F311=10, when inverter current is higher than F310, DO1 outputs ON signal. When inverter current is lower than （100-100*10%）=90A, DO1 outputs OFF signal.

F312 Frequency arrival threshold (Hz)	Setting range: 0.00～5.00	Mfr's value: 0.00

When F300=15 and F301=15, threshold range is set by F312.
For example: when F301=15, target frequency is 20HZ and F312=2, the running frequency reaches 18Hz (20-2), ON signal is output by DO1 until the running frequency reaches target frequency.

6.3.2 Digital multifunctional input terminals

F316 DI1 terminal function setting	Setting range: 0: no function; 1: running terminal; 2: stop terminal; 3: multi-stage speed terminal 1; 4: multi-stage speed terminal 2; 5: multi-stage speed terminal 3; 6: multi-stage speed terminal 4; 7: reset terminal;	Mfr's value: 11
F317 DI2 terminal function setting		Mfr's value: 9
F318 DI3 terminal function setting		Mfr's value: 15

F319 DI4 terminal function setting	8: free stop terminal; 9: external emergency stop terminal; 10: acceleration/deceleration forbidden terminal; 11: forward run jogging; 12: reverse run jogging; 13: UP frequency increasing terminal; 14: DOWN frequency decreasing terminal; 15: “FWD” terminal; 16: “REV” terminal; 17: three-line type input “X” terminal; 18: acceleration/deceleration time switchover 1; 21: frequency source switchover terminal; 34: Acceleration / deceleration switchover 2 37: Common-open PTC heat protection 38: Common-close PTC heat protection 42: oPEn protection terminal. 49: PID paused 53: Watchdog 60: Communication timeout 2 61: Start-stop terminal	Mfr’s value: 16

·This parameter is used for setting the corresponding function for multifunctional digital input terminal.
·Both free stop and external emergency stop of the terminal have the highest priority.
·When pulse given is selected, DI1 terminal is set as pulse signal input terminal automatically.

Table 6-3 Instructions for digital multifunctional input terminal

Value	Function	Instructions
0	No function	Even if signal is input, inverter will not work. This function can be set by undefined terminal to prevent mistake action.
1	Running terminal	When running command is given by terminal or terminals combination and this terminal is valid, inverter will run. This terminal has the same function with “run” key in keypad.
2	Stop terminal	When stop command is given by terminal or terminals combination and this terminal is valid, inverter will stop. This terminal has the same function with “stop” key in keypad.
3	Multistage speed terminal 1	15-stage speed is realized by combination of this group of terminals. See table 5-6.
4	Multistage speed terminal 2	
5	Multistage speed terminal 3	
6	Multistage speed terminal 4	
7	Reset terminal	This terminal has the same function with “reset” key in keypad. Long-distance malfunction reset can be realized by this function.
8	Free stop terminal	Inverter closes off output and motor stop process is not controlled by inverter. This mode is often used when load has big inertia or there are no requirements for stop time. This mode has the same function with free stop of F209.
9	External emergency stop terminal	When external malfunction signal is given to inverter, malfunction will occur and inverter will stop.
10	Acceleration/deceleration forbidden terminal	Inverter will not be controlled by external signal (except for stop command), and it will run at the current output frequency.
11	forward run jogging	Forward jogging running and reverse jogging running. Refer to F124, F125 and F126 for jogging running frequency, jogging acceleration/deceleration time.
12	reverse run jogging	

13	UP frequency increasing terminal	When frequency source is set by digital given, the setting frequency can be adjusted which rate is set by F211.
14	DOWN frequency decreasing terminal	
15	“FWD” terminal	When start/stop command is given by terminal or terminals combination, running direction of inverter is controlled by external terminals.
16	“REV” terminal	
17	Three-line input “X” terminal	“FWD”、“REV”、“CM” terminals realize three-line control. See F208 for details.
18	acceleration/deceleration time switchover 1	Please refer to Table 5-4.
21	frequency source switchover terminal	When F207=2, main frequency source and accessorial frequency source can be switched over by frequency source switching terminal. When F207=3, X and (X + Y) can be switched over by frequency source switching terminal.
34	Acceleration / deceleration switchover 2	Please refer to Table 5-4.
37	Common-open PTC heat protection	When this function is valid, common-open heat relay is externally connected. When common-open contact is closed and inverter is in the running status, inverter will trip into OH1.
38	Common-close PTC heat protection	When this function is valid, common-close heat relay is externally connected. When common-close contact is open and inverter is in the running status, inverter will trip into OH1.
42	OPEn protection terminal	When this terminal is invalid, inverter will trip into oPEn. When this terminal is valid, inverter will be reset.
49	PID paused	PID adjustment is invalid temporarily.
53	Watchdog	During the time set by F326 elapses without an impulse being registered, inverter will trip into Err6, and inverter will stop according to stop mode set by F327.
60	Communication timeout 2	When F907>0, and receiving the previous data, if after the time set by F907, the next data is not received, inverter will output communication timeout signal. The timeout signal will be cleared by this terminal, and after receiving correct data, inverter will accumulate time again.
61	Start-stop terminal	When the function is invalid, it is stop terminal. When the function is valid, it is start terminal.

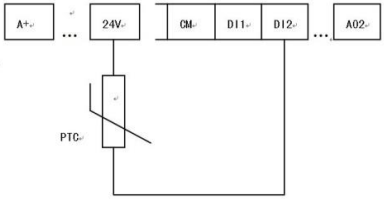

Fig 6-6 PTC heat protection

When the coding switch is in the end of “NPN”, PTC resistor should be connected between CM and DIx

terminal. When the coding switch is in the end of “PNP”, PTC resistor should be connected between DIx and 24V. The recommended resistor value is 16.5K.

Because the precision of external PTC has some differences with optocoupler consistency, protection value precision will be bad, heat protection relay is suggested to be used.

Table 6-4 Accel/decel selection

Accel/decel switchover 2 (34)	Accel/decel switchover 1 (18)	Present accel/decel time	Related parameters
0	0	The first accel/decel time	F114, F115
0	1	The second accel/decel time	F116, F117
1	0	The third accel/decel time	F277, F278
1	1	The fourth accel/decel time	F279, F280

Table 6-6 Instructions for multistage speed

K4	K3	K2	K1	Frequency setting	Parameters
0	0	0	0	None	None
0	0	0	1	Multi-stage speed 1	F504/F519/F534/F549/F557/F565
0	0	1	0	Multi-stage speed 2	F505/F520/F535/F550/F558/F566
0	0	1	1	Multi-stage speed 3	F506/F521/F536/F551/F559/F567
0	1	0	0	Multi-stage speed 4	F507/F522/F537/F552/F560/F568
0	1	0	1	Multi-stage speed 5	F508/F523/F538/F553/F561/F569
0	1	1	0	Multi-stage speed 6	F509/F524/F539/F554/F562/F570
0	1	1	1	Multi-stage speed 7	F510/F525/F540/F555/F563/F571
1	0	0	0	Multi-stage speed 8	F511/F526/F541/F556/F564/F572
1	0	0	1	Multi-stage speed 9	F512/F527/F542/F573
1	0	1	0	Multi-stage speed 10	F513/F528/F543/F574
1	0	1	1	Multi-stage speed 11	F514/F529/F544/F575
1	1	0	0	Multi-stage speed 12	F515/F530/F545/F576
1	1	0	1	Multi-stage speed 13	F516/F531/F546/F577
1	1	1	0	Multi-stage speed 14	F517/F532/F547/F578
1	1	1	1	Multi-stage speed 15	F518/F533/F548/F579

Note: 1. K4 is multi-stage speed terminal 4, K3 is multi-stage speed terminal 3, K2 is multi-stage speed terminal 2, K1 is multi-stage speed terminal 1. And 0 stands for OFF, 1 stands for ON.

2. 0=OFF, 1=ON

3. The setting of this table is valid when F580=0.

F324 Free stop terminal logic	Setting range: 0: positive logic (valid for low level); 1: negative logic (valid for high level)	Mfr's value: 0
F325 External emergency stop terminal logic		Mfr's value: 0
F326 Watchdog time	Setting range: 0.0: Invalid 0.1~30000	Mfr's value: 10.0
F327 Stop mode	Setting range: 0: Free to stop 1: Deceleration to stop	Mfr's value : 0
F328 Terminal filtering times	Setting range: 1~100	Mfr's value: 10

When multi-stage speed terminal is set to free stop terminal (8) and external emergency stop terminal (9), terminal logic level is set by this group of function codes. When F324=0 and F325=0, positive logic and low level is valid, when F324=1 and F325=1, negative logic and high level is valid.

F329 Run command of start terminal	Setting range: 0: Valid 1: Invalid	Mfr's value: 0

When F329=0, after power on, if start terminals (running terminal, forward jogging, reverse jogging, FWD, REV, 3-line X input enable) is valid, inverter will start running directly.

When F329=1, after power on, if start terminals (running terminal, forward jogging, reverse jogging, FWD, REV, 3-line X input enable) is valid, inverter will start running after disconnect start terminal first and enable it again.

Diagnostics and simulation functions

F330 Diagnostics of DIX terminal		Read only

F330 is used to display the diagnostics of DIX terminals.
Please refer to Fig 6-12 about the DIX terminals diagnostics in the first digitron.

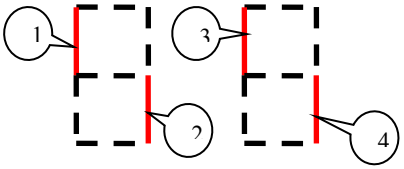

Fig 6-12 Status of digital input terminal

The dotted line means this part of digitron is red.
For example, in the first digitron, the upper part of digitron is red, it means DI1 terminal is invalid. The lower part of digitron is red, it means DI2 is valid.

F331Monitoring AI1		Read only

Relay/Digital output simulation

F335	Relay output simulation	Setting range: 0：Output active 1：Output inactive.	Mfr's value: 0
F336	DO1 output simulation		Mfr's value: 0

Take an example of DO1 output simulation, when inverter is in the stop status and enter F336, press the UP key, the DO1 terminal is valid. Relax the UP key, DO1 remains valid status. After quitting F336, DO1 will revert to initial output status.

Analog output simulation

F338	AO1 output simulation	Setting range: 0～4095	Mfr's value: 0

When inverter is in the stop status, and enter F338 or F339, press the UP key, the output analog will increase, and when press the DOWN key, the output analog will decrease. If relax the key, analog output remains stable. After quitting the parameters, AO1 and AO2 will revert to initial output status.

F340 Selection of terminal negative logic	Setting range: 0: Invalid 1: DI1 negative logic 2: DI2 negative logic 4: DI3 negative logic 8: DI4 negative logic	Mfr's value: 0

For example: if user wants to set DI1 and DI4 to negative logic, please set F340=1+8=9.

F343 Delay time of DI1 ON	Setting range: 0.00～99.99	Mfr's value: 0.00
F344 Delay time of DI2 ON	Setting range: 0.00～99.99	Mfr's value: 0.00
F345 Delay time of DI3 ON	Setting range: 0.00～99.99	Mfr's value: 0.00
F346 Delay time of DI4 ON	Setting range: 0.00～99.99	Mfr's value: 0.00
F351 Delay time of DI1 OFF	Setting range: 0.00～99.99	Mfr's value: 0.00
F352 Delay time of DI2 OFF	Setting range: 0.00～99.99	Mfr's value: 0.00
F353 Delay time of DI3 OFF	Setting range: 0.00～99.99	Mfr's value: 0.00
F354 Delay time of DI4 OFF	Setting range: 0.00～99.99	Mfr's value: 0.00

F359 Stop command priority	Setting range: 0: Invalid 1: Valid	Mfr's value: 0

·When F359=1, if inverter get stop command when run command is valid, inverter will stop first. Inverter will start again only after disconnecting the start terminal first and connect it again.

F360 DO terminal negative logic	Setting range: 0: Invalid 1: DO1 negative logic 2: Reserved 4: Relay 1	Mfr's value: 0

·If DO1 is negative logic, F360=1. If DO2 is negative logic, F360=2. If relay 1 is negative logic, F360=4. If DO1 and DO2 are negative logic, then F360=1+2=3..

6.4 Analog Input and Output

E600 series inverters have 1 analog input channel and 1 analog output channel.

F400 Lower limit of AI1 channel input (V)	Setting range: 0.00～F402	Mfr's value: 0.04
F401 Corresponding setting for lower limit of AI1 input	Setting range: 0～2.00	Mfr's value: 1.00
F402 Upper limit of AI1 channel input (V)	Setting range: F400～10.00	Mfr's value: 10.00
F403 Corresponding setting for upper limit of AI1 input	Setting range: 0.00 ～2.00	Mfr's value: 2.00
F404 AI1 channel proportional gain K1	Setting range: 0.0～10.0	Mfr's value: 1.0
F405 AI1 filtering time constant (S)	Setting range: 0.10～10.00	Mfr's value: 0.10

·In the mode of analog speed control, sometimes it requires adjusting coincidence relation among upper limit and lower limit of input analog, analog changes and output frequency, to achieve a satisfactory speed control effect.

· Upper and lower limit of analog input are set by F400 and F402.

For example: when F400=1, F402=8, if analog input voltage is lower than 1V, system judges it as 0. If input voltage is higher than 8V, system judges it as 10V (Suppose analog channel selects 0-10V). If Max frequency F111 is set to 50Hz, the output frequency corresponding to 1-8V is 0-50Hz.

· The filtering time constant is set by F405.

The greater the filtering time constant is, the more stable for the analog testing. However, the precision may decrease to a certain extent. It may require appropriate adjustment according to actual application.

· Channel proportional gain is set by F404.

If 1V corresponds to 10Hz and F404=2, then 1V will correspond to 20Hz.

· Corresponding setting for upper / lower limit of analog input are set by F401 and F403.

If Max frequency F111 is 50Hz, analog input voltage 0-10V can correspond to output frequency from -50Hz to 50Hz by setting this group function codes. Please set F401=0 and F403=2, then 0V corresponds to -50Hz, 5V corresponds to 0Hz and 10V corresponds to 50Hz. The unit of corresponding setting for upper / lower limit of input is in percentage (%). If the value is greater than 1.00, it is positive; if the value is less than 1.00, it is negative. (e.g. F401=0.5 represents –50%).

If the running direction is set to forward running by F202, then 0-5V corresponding to the minus frequency will cause reverse running, or vice versa.

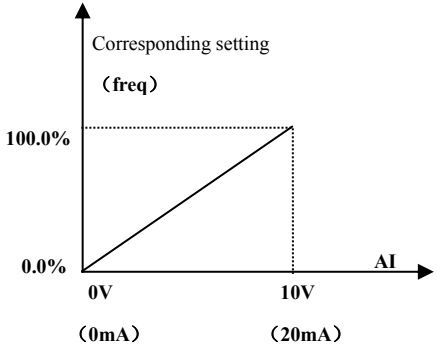

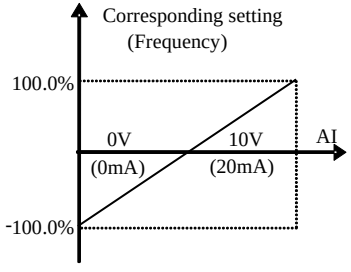

Fig 6-14 correspondence of analog input to setting

The unit of corresponding setting for upper / lower limit of input is in percentage (%). If the value is greater than 1.00, it is positive; if the value is less than 1.00, it is negative. (e.g. F401=0.5 represents –50%).The corresponding setting benchmark: in the mode of combined speed control, analog is the accessorial frequency and the setting benchmark for range of accessorial frequency which relatives to main frequency is "main frequency X"; corresponding setting benchmark for other cases is the "max frequency", as illustrated in the right figure:

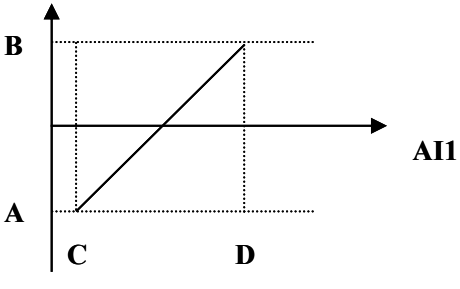

A= **(F401-1)* setting value**

B= **(F403-1)* setting value**

C= **F400** D= **F402**

F418 AI1 channel 0Hz voltage dead zone (V)	Setting range: 0.00～1.00	Mfr's value: 0.00

Analog input voltage 0-5V can correspond to output frequency -50Hz-50Hz (2.5V corresponds to 0Hz) by setting the function of corresponding setting for upper / lower limit of analog input. The group function codes of F418, F419 and F420 set the voltage range corresponding to 0Hz. For example, when F418=0.5, F419=0.5 and F420=0.5, the voltage range from (2.5-0.5=2) to (2.5+0.5=3) corresponds to 0Hz. So if F418=N, F419=N and F420=N, then 2.5±N should correspond to 0Hz. If the voltage is in this range, inverter will output 0Hz.
0HZ voltage dead zone will be valid when corresponding setting for lower limit of input is less than 1.00.
E600 series inverters have one analog output channel.

F423 AO1 output range	Setting range: 0: 0～5V; 1: 0～10V or 0~20mA 2: 4~20mA	Mfr's value: 1
F424 AO1 lowest corresponding frequency (Hz)	Setting range: 0.0～F425	Mfr's value: 0.05

F425 AO1 highest corresponding frequency (Hz)	Setting range: F424～F111	Mfr's value: 50.00
F426 AO1 output compensation (%)	Setting range: 0～120	Mfr's value: 100

· AO1 output range is selected by F423. When F423=0, AO1 output range selects 0-5V, and when F423=1, AO1 output range selects 0-10V or 0-20mA. When F423=2, AO1 output range selects 4-20mA (When AO1 output range selects current signal, please turn the switch J5 to "I" position.)

· Correspondence of output voltage range (0-5V or 0-10V) to output frequency is set by F424 and F425. For example, when F423=0, F424=10 and F425=120, analog channel AO1 outputs 0-5V and the output frequency is 10-120Hz.

· AO1 output compensation is set by F426. Analog excursion can be compensated by setting F426.

F431 AO1 analog output signal selecting	Setting range: 0: Running frequency; 1: Output current; 2: Output voltage; 3: AI1 7: Given by PC/PLC 8: Target frequency	Mfr's value: 0

· Token contents output by analog channel are selected by F431. Token contents include running frequency, output current and output voltage.

· When output current is selected, analog output signal is from 0 to twofold rated current.

· When output voltage is selected, analog output signal is from 0V to rated output voltage.

F460 AI1channel input mode	Setting range: 0: straight line mode 1: folding line mode	Mfr's value: 0
F462 AI1 insertion point A1 voltage value (V)	Setting range: F400～F464	Mfr's value: 2.00
F463 AI1 insertion point A1 setting value	Setting range: 0.00~2.00	Mfr's value: 1.20
F464 AI1 insertion point A2 voltage value (V)	Setting range: F462～F466	Mfr's value: 5.00
F465 AI1 insertion point A2 setting value	Setting range: 0.00~2.00	Mfr's value: 1.50
F466 AI1 insertion point A3 voltage value (V)	Setting range: F464～F402	Mfr's value: 8.00
F467 AI1 insertion point A3 setting value	Setting range: 0.00~2.00	Mfr's value: 1.80

When analog channel input mode selects straight-line, please set it according to the parameters from F400 to F429. When folding line mode is selected, three points A1(B1）, A2(B2), A3(B3) are inserted into the straight line, each of which can set the according frequency to input voltage. Please refer to the following figure:

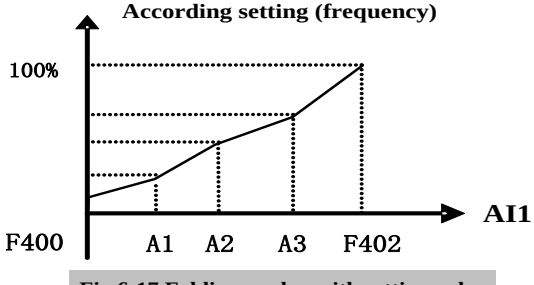

Fig 6-17 Folding analog with setting value

F400 and F402 are lower/upper limit of analog AI1 input. When F460=1， F462=2.00V, F463=1.4, F111=50, F203=1, F207=0, then A1 point corresponding frequency is (F463-1）*F111=20Hz, which means 2.00V corresponding to 20Hz. The other points can be set by the same way.

6.5 Multi-stage Speed Control

The function of multi-stage speed control is equivalent to a built-in PLC in the inverter. This function can set running time, running direction and running frequency.
E600 series inverter can realize 15-stage speed control and 8-stage speed auto circulating.
During the process of speed track, multi-stage speed control is invalid. After speed track is finished, inverter will run to target frequency according to the setting value of parameters.

F500 Stage speed type	Setting range: 0: 3-stage speed; 1: 15-stage speed; 2: Max 8-stage speed auto circulating	Mfr's value: 1

·In case of multi-stage speed control (F203=4), the user must select a mode by F500. When F500=0, 3-stage speed is selected. When F500=1, 15-stage speed is selected. When F500=2, max 8-stage speed auto circulating is selected. When F500=2, "auto circulating" is classified into "2-stage speed auto circulating", "3-stage speed auto circulating", … "8-stage speed auto circulating", which is to be set by F501.

Table 6-7 Selection of Stage Speed Running Mode

F203	F500	Mode of Running	Description
4	0	3-stage speed control	The priority in turn is stage-1 speed, stage-2 speed and stage-3 speed. It can be combined with analog speed control. If F207=4, "3-stage speed control" is prior to analog speed control.
4	1	15-stage speed control	It can be combined with analog speed control. If F207=4, "15-stage speed control" is prior to analog speed control.
4	2	Max 8-stage speed auto circulating	Adjusting the running frequency manually is not allowable. "2-stage speed auto circulating", "3-stage speed auto circulating", … "8-stage speed auto circulating" may be selected through setting the parameters.

F501 Selection of Stage Speed Under Auto-circulation Speed Control	Setting range: 2～8	Mfr's value: 7
F502 Selection of Times of Auto-circulation Speed Control	Setting range: 0～9999 (when the value is set to 0, the inverter will carry out infinite circulating)	Mfr's value: 0
F503 Status After Auto-circulation Running Finished.	Setting range: 0: Stop 1: Keep running at last-stage speed	Mfr's value: 0

· If running mode is auto-circulation speed control (F203=4 and F500=2), please set the related parameters by F501~F503.
· That the inverter runs at the preset stage speed one by one under the auto-circulation speed control is called as "one time".
· If F502=0, inverter will run at infinite auto circulation, which will be stopped by "stop" signal.
· If F502>0, inverter will run at auto circulation conditionally. When auto circulation of the preset times is finished continuously (set by F502), inverter will finish auto-circulation running conditionally. When inverter keeps running and the preset times is not finished, if inverter receives "stop command", inverter will stop. If inverter receives "run command" again, inverter will automatically circulate by the setting time of F502.
· If F503=0, then inverter will stop after auto circulation is finished. If F503=1, then inverter will run at the speed of the last-stage after auto-circulation is finished as follows:
e.g., F501=3, then inverter will run at auto circulation of 3-stage speed;
F502=100, then inverter will run 100 times of auto circulation;

F503=1, inverter will run at the speed of the last stage after the auto-circulation running is finished.

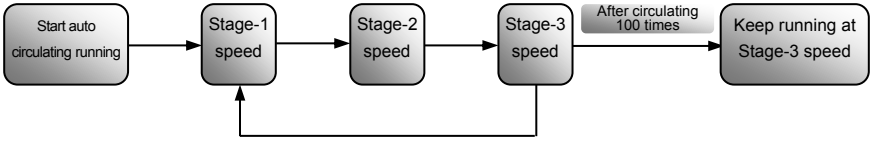

Figure 6-18 Auto-circulating Running

Then the inverter can be stopped by pressing “stop” or sending “stop” signal through terminal during auto-circulation running.

F504 Frequency setting for stage 1 speed (Hz)	Setting range: F112～F111	Mfr’s value: 5.00
F505 Frequency setting for stage 2 speed (Hz)		Mfr’s value: 10.00
F506 Frequency setting for stage 3 speed (Hz)		Mfr’s value: 15.00
F507 Frequency setting for stage 4 speed (Hz)		Mfr’s value: 20.00
F508 Frequency setting for stage 5 speed (Hz)		Mfr’s value: 25.00
F509 Frequency setting for stage 6 speed (Hz)		Mfr’s value: 30.00
F510 Frequency setting for stage 7 speed (Hz)		Mfr’s value: 35.00
F511 Frequency setting for stage 8 speed (Hz)		Mfr’s value: 40.00
F512 Frequency setting for stage 9 speed (Hz)		Mfr’s value: 5.00
F513 Frequency setting for stage 10 speed (Hz)		Mfr’s value: 10.00
F514 Frequency setting for stage 11 speed (Hz)		Mfr’s value: 15.00
F515 Frequency setting for stage 12 speed (Hz)		Mfr’s value: 20.00
F516 Frequency setting for stage 13 speed (Hz)		Mfr’s value: 25.00
F517 Frequency setting for stage 14 speed (Hz)		Mfr’s value: 30.00
F518 Frequency setting for stage 15 speed (Hz)		Mfr’s value: 35.00
F519～F533 Acceleration time setting for the speeds from Stage 1 to Stage 15 (S)	Setting range: 0.1～3000	Subject to inverter model
F534～F548 Deceleration time setting for the speeds from Stage 1 to Stage 15 (S)	Setting range: 0.1～3000	
F549～F556 Running directions of stage speeds from Stage 1 to Stage 8 (S)	Setting range: 0: forward running; 1: reverse running	Mfr’s value: 0
F573~F579 Running directions of stage speeds from stage 9 to stage 15 (S)	Setting range: 0: forward running; 1: reverse running	Mfr’s value: 0
F557～564 Running time of stage speeds from Stage 1 to Stage 8 (S)	Setting range: 0.1～3000	Mfr’s value: 1.0
F565～F572 Stop time after finishing stages from Stage 1 to Stage 8 (S)	Setting range: 0.0～3000	Mfr’s value: 0.0
F580 Stage-speed mode	Setting range: 0: Stage speed mode 1 1: Stage speed mode 2	Mfr’s value: 0

When F580=0, 0000 means invalid, 0001 means the first speed, 1111 means the 15th speed.
When F580=1, 0000 means the first speed, 0001 means the second speed, and so on. 1111 means invalid.

6.6 Auxiliary Functions

F600 DC Braking Function Selection	Setting range: 0: Invalid; 1: braking before starting; 2: braking during stopping; 3: braking during starting and stopping	Mfr's value: 0
F601 Initial Frequency for DC Braking (Hz)	Setting range: 0.20～50.00	Mfr's value: 1.00
F602 DC Braking efficiency before Starting	Setting range: 0~15	Mfr's value: 5
F603 DC Braking efficiency During Stop		Mfr's value: 5
F604 Braking Lasting Time Before Starting (S)	Setting range: 0.0～30.00	Mfr's value: 0.50
F605 Braking Lasting Time During Stopping (S)		
F656 Time of DC braking when stop	Setting range: 0.00~30.00	Mfr's value: 0

· When F600=0, DC braking function is invalid.

· When F600=1, braking before starting is valid. After the right starting signal is input, inverter starts DC braking. After braking is finished, inverter will run from the initial frequency.

In some application occasion, such as fan, motor is running at a low speed or in a reverse status, if inverter starts immediately, OC malfunction will occur. Adopting "braking before starting" will ensure that the fan stays in a static state before starting to avoid this malfunction.

·During braking before starting, if "stop" signal is given, inverter will stop by deceleration time.

When F600=2, DC braking during stopping is selected. After output frequency is lower than the initial frequency for DC braking (F601), DC braking will stop the motor immediately

During the process of braking during stopping, if "start" signal is given, DC braking will be finished and inverter will start.

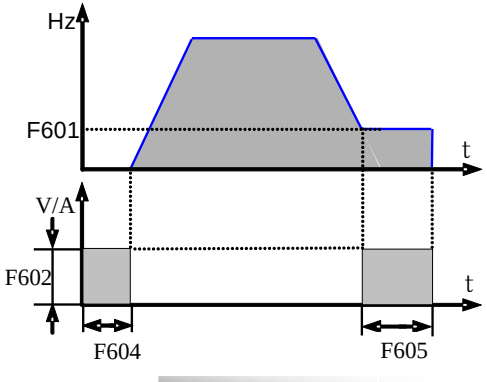

Figure 5-18 DC braking

If "stop" signal is given during the process of braking during stopping, inverter will have no response and DC braking during stopping still goes on.

· When jogging function is valid, the function of braking before starting set by F600 is valid, and the function of speed track is invalid.

· When jogging function is invalid and F613-1, the function of braking before starting is invalid.

· Parameters related to "DC Braking": F601, F602, F603, F604, F605, interpreted as follows:

a. F601: Initial frequency of DC-braking. DC braking will start to work as inverter's output frequency is lower than this value.

b. F602/F603: DC braking efficiency (the unit is the percentage of rated current). The bigger value

will result in a quick braking. However, motor will overheat with too big value.

c. F604: Braking duration before starting. The time lasted for DC braking before inverter starts.

d. F605: Braking duration when stopping. The time lasted for DC braking while inverter stops.

·Note: during DC braking, because motor does not have self-cold effect cause by rotating, it is in the state of easy over-heat. Please do not set DC braking voltage too high and do not set DC braking time to long.

DC braking, as shown in Figure 6-19

F607 Selection of Stalling Adjusting Function	Setting range: 0~2:Reserved 3: Voltage/current control 4: Voltage control 5: Current control	Mfr's value: 3
F608 Stalling Current Adjusting (%)	Setting range: 25～FA72	Mfr's value: 160
F609 Stalling Voltage Adjusting (%)	Setting range: 110～200	Mfr's value: S2/T2: 130 T3: 140
F610 Stalling Protection Judging Time (S)	Setting range: 0.0～3000	Mfr's value: 60.0

Initial value of stalling current adjusting is set by F608, when the present current is higher than rated current of inverter*F608, stalling current adjusting function is valid.

During the process of acceleration, if output current is higher than initial value of stalling current adjusting, inverter will not accelerate until the output current is lower than initial value of stalling current adjusting.

In case of stalling during stable speed running, the frequency will drop.

F607 is used to set selection of stalling adjusting function.

Voltage control: when motor stops quickly or load changes suddenly, DC bus voltage will be high. Voltage control function can adjust deceleration time and output frequency to avoid OE.

When braking resistor or braking unit is used, please do not use voltage control function. Otherwise, the deceleration time will be changed.

Current control: when motor accelerates quickly or load changed suddenly, inverter may trip into OC. Current control function can adjust accel/decel time or decrease output frequency to control proper current value. It is only valid in VF control mode.

Note: (1) Voltage/current control is not suitable for lifting application.

(2) This function will change accel/decel time. Please use this function properly.

Initial value of stalling voltage adjusting is set by F609.

Stalling protection judging time is set by F610. When inverter starts stalling adjusting function and continues the setting time of F610, inverter will stop running and OL1 protection occurs.

F611 Dynamic Braking threshold	Setting range: T3: 600～2000 S2/T2: 320~2000	Subject to inverter model
F612 Dynamic braking duty ratio (%)	Setting range: 0～100	Mfr's value: 100

Initial voltage of dynamic braking threshold is set by F611. When DC bus voltage is higher than the setting value of this function, dynamic braking starts, braking unit starts working. After DC bus voltage is lower than the setting value, braking unit stops working.

The value of F611 should be set according to input voltage. When the input voltage is 400V, F611 should be set to 700V, when input voltage is 460V, F611 should be set to 770V. The lower the dynamic braking threshold is, the better dynamic braking effect is. But the heat of braking resistor is more serious. The higher the dynamic braking threshold is, the worse dynamic braking effect is. And at the process of braking, inverter will easily trip to OE.

Dynamic braking duty ratio is set by F612, the range is 0~100%. The value is higher, the braking effect is better, but the braking resistor will get hot.

F613 Speed track	Setting range: 0: invalid 1: valid 2: valid at the first time	Mfr's value: 0

When F613=0, the function of speed track is invalid.
When F613=1, the function of speed track is valid.
After inverter tracks motor speed and rotating direction, inverter will start the rotating motor smoothly. This function is suitable for the situation of auto-starting after repowered on, auto-starting after reset, auto-starting when running command valid but direction signal lost and auto-starting when running command invalid.
When F613=2, the function is valid at the first time after inverter is repower on.
Note: When F106=0 or 6, speed track function is invalid.

F614 Speed track mode	Setting range: 0: Speed track from frequency memory 1: Speed track from zero 2: Speed track from max frequency	Mfr's value: 0

When F614 is set to 0, inverter will track speed down from frequency memory.
When F614 is set to 1, inverter will track speed up from 0Hz.
When F614 is set to 2, inverter will track speed down from max frequency.

F615 Speed track rate	Setting range: 1～100	Mfr's value: 20

It is used to select the rotation velocity speed track when the rotation tracking restart mode is adopted. The larger the parameter is, the faster the speed track is. But if this parameter is too large, it likely results in unreliable tracking.

F618 Delay time of speed track (S)	Setting range: 0.5～60.0	Mfr's value: 1.5

F620 Brake delay turn-off time	Setting range: 0.0 (brake not closed when stop) 0.1～3000	Mfr's value: 5.0

F620=0, dynamic brake is not closed in stop status, it starts when PN voltage is higher than brake point; F620 ≠0, dynamic brake can proceed normally when inverter is running, the time set by F620 is the delay time after stop, then the dynamic brake closes automatically.

F638 Parameters copy enabled	Setting range: 0: Copy forbidden 1: Parameters download 1 (voltage level and power are totally same) 2: Parameters download 2 (without considering voltage level and power)	Mfr's value: 1
F639 Parameters copy code	Setting range: 5600~5699	Subject to version of software
F640 Parameter copy type	Setting range: 0: Copy all parameters 1: Copy parameters (except motor parameters from F801 to F810/F844)	Mfr's value: 1

Please refer to the user manual of parameters copy.

The fault is as following:

Code	Causes
Er71 Copy timeout	During copying process, there is no valid data during 3s.
Er72 Copy when running	Parameters copy when inverter is in the running status.
Er73 Copy without input password	Password is valid and user does not input password.
Er74 Copy between different models	If copy code, or voltage level or power is different, copy is forbidden.
Er75 Copy forbidden	Parameters copy when F638=0

F643 Multi-functional key	Setting range: 0: Invalid 1: FWD jogging 1. REV jogging 2. Switchover between local/remote	Mfr's value: 0

This function is valid only for remote control keypad.

When F643=3, after pressing multi-functional key and switchover, F200 and F201 will be changed to 3 automatically, which is MODBUS. If user wants to switch to keypad, F200 and F201 should be set again.

F660 Voltage-limit current-limit adjustment coefficient	Setting range: 0.01~10.00	Mfr's value: 2.00

Lower this factor properly if frequent over-voltage protection occurs in the process of deceleration; Increase the factor when deceleration is too slow.

6.7. Malfunction and Protection

F700 Selection of terminal free stop mode	Setting range: 0: free stop immediately; 1: delayed free stop	Mfr's value: 0
F701 Delay time for free stop and programmable terminal action	Setting range: 0.0～60.0	Mfr's value: 0.0

· "Selection of free stop mode" can be used only for the mode of "free stop" controlled by the terminal. The related parameters setting is F201=1, 2, 4.

When "free stop immediately" is selected, delay time (F701) will be invalid and inverter will free stop immediately.

· "Delayed free stop" means that upon receiving "free stop" signal, the inverter will execute "free stop" command after waiting some time instead of stopping immediately. Delay time is set by F701. During the process of speed track, the function of delayed free stop is invalid.

F704 Inverter Overloading pre-alarm Coefficient (%)	Setting range: 50～100	Mfr's value: 80
F705 Motor Overloading pre-alarm Coefficient (%)	Setting range: 50～100	Mfr's value: 80
F706 Inverter Overloading Coefficient (%)	Setting range: 120～190	Mfr's value: 150
F707 Motor Overloading Coefficient (%)	Setting range: 20～100	Mfr's value: 100

·When inverter or motor is in over current status, if the accumulation time is more than inverter's or motor's overload protection time * F704 or F705, and F300 or F301 or F302=10 or 11, inverter will output ON signal. Inverter overloading coefficient: the ratio of overload-protection current and rated current, whose value shall be subject to actual load.

· Motor overloading coefficient (F707): when inverter drives lower power motor, please set the value of F707 by below formula in order to protect motor

$$\text{Motor Overloading Coefficient} = \frac{\text{Actual motor power}}{\text{Matching motor power}} \times 100\%。$$

Please set F707 according to actual situation. The lower the setting value of F707 is, the faster the overload protection speed. Please refer to Fig 6-20.

For example: 7.5kW inverter drives 5.5kW motor, $F707 = \frac{5.5}{7.5} \times 100\% \approx 70\%$. When the actual current of motor reaches 140% of inverter rated current, inverter overload protection will display after 1 minute.

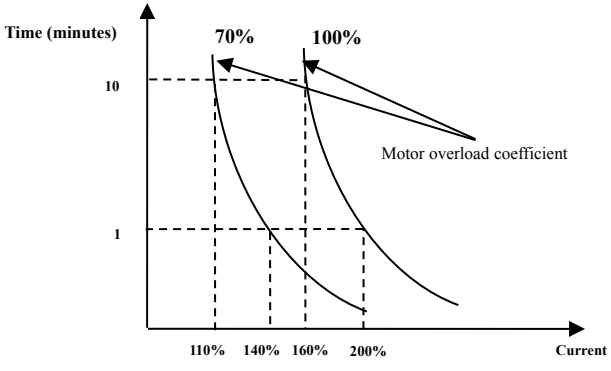

Fig 6-20 Motor overload coefficient

When the output frequency is lower than 10Hz, the heat dissipation effect of common motor will be worse. So when running frequency is lower than 10Hz, the threshold of motor overload value will be reduced. Please refer to Fig 6-21 (F707=100%):

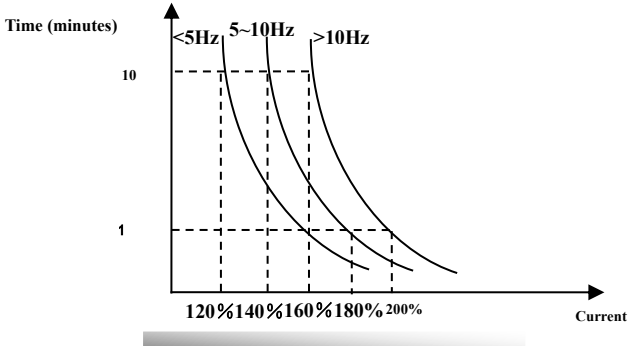

Fig 6-21 Motor overload protection value

F708 Record of The Latest Malfunction Type	Setting range: Please refer to Appendix 1.	
F709 Record of Malfunction Type for Last but One		
F710 Record of Malfunction Type for Last but Two		
F711 Fault Frequency of The Latest Malfunction (Hz)		
F712 Fault Current of The Latest Malfunction (A)		
F713 Fault PN Voltage of The Latest Malfunction (V)		
F714 Fault Frequency of Last Malfunction but One(Hz)		
F715 Fault Current of Last Malfunction but One(A)		
F716 Fault PN Voltage of Last Malfunction but One (V)		
F717 Fault Frequency of Last Malfunction but Two(Hz)		
F718 Fault Current of Last Malfunction but Two (A)		
F719 Fault PN Voltage of Last Malfunction but Two (V)		
F720 Record of overcurrent protection fault times		
F721 Record of overvoltage protection fault times		
F722 Record of overheat protection fault times		
F723 Record of overload protection fault times		
F725 Under-voltage protection	Setting range: 0: reset manually 1: reset automatically	Mfr's value: 2
F726 Overheat	Setting range: 0: invalid; 1: valid	Mfr's value: 1
F729 Under-voltage filtering constant (2mS)	Setting range: 1～3000	Mfr's value: 5
F730 Overheat protection filtering constant (S)	Setting range: 0.1～60.0	Mfr's value: 5.0
F732 Under-voltage protection voltage threshold (V)	Setting range: T2/S2: 120~450 T3: 300~450	Subject to inverter model
F737 Over-current 1 protection	Setting range: 0:Invalid 1: Valid	Mfr's value: 1
F738 Over-current 1 protection coefficient	Setting range: 0.50～3.00	Mfr's value: 2.5
F739 Over-current 1 protection record		

· F738= OC 1 value/inverter rated current

· In running status, F738 is not allowed to modify. When over-current occurs, OC1 is displayed

F741 Analog disconnected protection	Setting range: 0: Invalid 1: Stop and AErr displays. 2: Stop and Aerr is not displayed. 3: Inverter runs at the min frequency. 4: Reserved.	Mfr's value: 0
F742 Threshold of analog disconnected protection (%)	Setting range: 1~100	Mfr's value: 50

When the values of F400 and F406 are lower than 0.10V, analog disconnected protection is invalid. Analog channel AI3 has no disconnected protection.

When F741 is set to 1, 2 or 3, the values of F400 and F406 should be set to 1V-2V, to avoid the error protection by interference.

Analog disconnected protection voltage=analog channel input lower limit * F742. Take the AI1 channel for the example, if F400=1.00, F742=50, then disconnection protection will occur when the AI1 channel voltage is lower than 0.5V.

F745 Threshold of pre-alarm overheat (%)	Setting range: 0~100	Mfr's value: 80
F747 Carrier frequency auto-adjusting	Setting range: 0: Invalid 1: Valid	Mfr's value: 1

When F747=1, the temperature of radiator reaches to certain temperature, inverter carrier frequency will adjust automatically, to decrease the temperature of inverter. This function can avoid overheat malfunction.

F752 Overload quitting coefficient	Setting range: 0.1~20.0	Mfr's value: 1.0
F753 Selection of overload protection	Setting range: 0: Normal motor 1: variable frequency motor	Mfr's value: 1

·The bigger the setting value of F752 is, the faster the shortened overload cumulative time is.

·When F753=0, because heat dissipation effect of normal motor is bad in low speed, the electronic thermal protection value will be adjusted properly. It means overload protection threshold of motor will be decreased when running frequency is lower than 30Hz.

·When F753=1, because heat dissipation effect of variable frequency motor is not influenced by speed, there is no need to adjust the protection value.

F754 Zero-current threshold (%)	Setting range: 0~200	Mfr's value: 5
F755 Duration time of zero-current (S)	Setting range: 0~60.0	Mfr's value: 0.5

When the output current is fallen to zero-current threshold, and after the duration time of zero-current, ON signal is output.

F759 Carrier-frequency ratio	Setting range: 3～15	Mfr's value: 7

·carrier frequency=running frequency *F759. When the product of running frequency and F759 is higher than carrier frequency, actual carrier frequency will be increased automatically, and it will not be limited by temperature control carrier frequency.

F761 Switchover mode of FWD/REV	Setting range: 0: At zero 2: at start frequency	Mfr's value: 0

·When F761 = 0, FWD/REV switches at zero frequency, F120 is valid.

·When F761 = 1, FWD/REV switches at start frequency, F120 is invalid, if start frequency is too high, current shock will occur during switchover process.

F770 Auxiliary version No.		

·It only can be checked.

6.8 Parameters of the Motor

F801 Rated power (kW)	Setting range: 0.1～1000.0	
F802 Rated voltage (V)	Setting range: 1～1300	
F803 Rated current (A)	Setting range: 0.2～6553.5	

F804 Number of motor poles	Setting range: 2～100	4
F805 Rated rotary speed (rmp/min)	Setting range: 1～39000	
F810 Motor rated frequency (Hz)	Setting range: 1.00~650.00	50.00

·Please set the parameters in accordance with those indicated on the nameplate of the motor.

·Excellent control performance of vector control requires accurate parameters of the motor. Accurate parameter tuning requires correct setting of rated parameters of the motor.

·In order to get the excellent control performance, please configurate the motor in accordance with adaptable motor of the inverter. In case of too large difference between the actual power of the motor and that of adaptable motor for inverter, the inverter's control performance will decrease remarkably.

***Note**:

1. Parameter F804 can only be checked, not be modified.
2. When motor rated voltage has large difference with input voltage of inverter, and inverter input voltage is higher than motor rated voltage, please select F154=1.

6.9 Communication Parameter

F900 Communication Address	Setting range: 1~255: single inverter address 0: broadcast address	Mfr's value: 1
F901 Communication Mode	Setting range: 1: ASCII 2: RTU 3: Remote keypad	Mfr's value: 2
F902 Stop bits	Setting range: 1~2	Mfr's value: 2
F903 Parity Check	Setting range: 0: Invalid 1: Odd 2: Even	Mfr's value: 0
F904 Baud Rate	Setting range: 0: 1200; 1: 2400; 2: 4800; 3: 9600; 4: 19200 5: 38400 6: 57600	Mfr's value: 3
F905 Communication timeout period (S)	Setting range: 0.0~3000.0	Mfr's value: 0.0
F907 Time 2 of communication timeout (S)	Setting range: 0.0~3000.0	Mfr's value: 0.0

F904=9600 is recommended for baud rate, which makes run steady. Communication parameters refer to Appendix 4.

When F905 is set to 0.0, the function is invalid. When F905 ≠ 0.0, if the inverter has not received effective command from PC/PLC during the time set by F905, inverter will trip into CE.

When F907>0, and receiving the previous data, if after the time set by F907, the next data is not received, inverter will output communication timeout signal. The timeout signal will be cleared by this terminal, and after receiving correct data, inverter will accumulate time again.

6.10 PID Parameters

6.10.1 Internal PID adjusting and constant pressure water supply

Internal PID adjusting control is used for single pump or double pump automatic constant-pressure water supply, or used for simple close-loop system with convenient operation.

The usage of pressure meter:

As FAO2=1: channel AI1

"10V" connect with the power supply of pressure meter, if the power supply of pressure meter is 5V, please supply a 5V power.

"AI1" connect with the pressure signal port of pressure meter

"GND" connect with the grounding of pressure meter

For current type sensor, two-line 4-20mA signal is inputted to inverter, please connect CM to GND, and 24V is connected to power supply of sensor.

6.10.2 Parameters

FA00 Water supply mode	Setting range: 0: Single pump (PID control mode)	Mfr's value: 0

When FA00=0 and single pump mode is selected, the inverter only controls one pump. The control mode can be used in the closed-loop control system, for example, pressure, flow.

FA01 PID adjusting target given source	Setting range: 0: FA04 1: AI1	Mfr's value: 0

When FA01=0, PID adjusting target is given by FA04 or MODBUS.
When FA01=1, PID adjusting target is given by external analog AI1.

FA02 PID adjusting feedback given source	Setting range: 1: AI1 4: Set by modbus 5:Running current	Mfr's value: 1

When FA02=1, PID feedback signal is given by external analog AI1.
When FA02=4, PID feedback is set by Modbus, the communication address is 2030H, the given range is 0~1000, it means 0~100.0%.
When FA02=5, PID feedback signal is given by inverter running current.

FA03 Max limit of PID adjusting (%)	FA04～100.0	Mfr's value：100.0
FA04 Digital setting value of PID adjusting (%)	FA05～FA03	Mfr's value：50.0
FA05 Min limit of PID adjusting (%)	0.0～FA04	Mfr's value：0.0

When negative feedback adjusting is valid, if pressure is higher than max limit of PID adjusting, pressure protection will occur. If inverter is running, it will free stop, and "nP" is displayed. When positive feedback adjusting is valid, if pressure is higher than Max limit, it indicates that feedback pressure is too low, inverter should accelerate or a linefrequency should be added to increase the displacement.
When FA01=0, the value set by FA04 is digital setting reference value of PID adjusting.
When positive feedback adjusting is valid, if pressure is higher than min limit of PID adjusting, pressure protection will occur. If inverter is running, it will free stop, and "nP" is displayed. When negative feedback adjusting, if pressure is higher than min limit, it indicates that feedback pressure is too low, inverter should accelerate or a linefrequency should be added to increase the displacement.
For example: if the range of pressure meter is 0-1.6MPa, then setting pressure is 1.6*70%=1.12MPa, and the max limit pressure is 1.6*90%=1.44MPa, and the min limit pressure is 1.6*5%=0.08MPa.

FA06 PID polarity	0: Positive feedback 1: Negative feedback	Mfr's value：1

When FA06=0, the higher feedback value is, the higher the motor speed is. This is positive feedback.
When FA06=1, the lower the feedback value is, the higher the motor speed is. This is negative feedback.

FA07 Dormancy function selection	Setting range: 0: Valid 1: Invalid	Mfr's value: 1

When FA07=0, if inverter runs at the min frequency FA09 for a period time set by FA10, inverter will stop.
When FA07=1, the dormancy function is invalid.

FA09 Min frequency of PID adjusting (Hz)	Setting range: Max(F112, 0.1)~F111	Mfr's value: 5.00

The min frequency is set by FA09 when PID adjusting is valid.

FA10 Dormancy delay time (S)	Setting range: 0.0~500.0	Mfr's value: 15.0

When FA07=0, inverter runs at min frequency FA09 for a period time set by FA10, inverter will free stop and enter into the dormancy status, "np" is displayed.

FA11 Wake delay time (S)	Setting range: 0.0~3000	Mfr's value: 3.0

After the wake delay time, if the pressure is lower than min limit pressure (Negative feedback), inverter will begin running immediately, or else, inverter will be in the dormancy status.

FA12 PID max frequency(Hz)	Setting range: FA09~F111	Mfr's value: 50.00

When PID is valid, FA12 is used to set the max frequency.

FA18 Whether PID adjusting target is changed	0: Invalid 1: Valid	Mfr's value: 1

When FA18=0 and FA01≠0, PID adjusting target cannot be changed.

FA19 Proportion Gain P	Setting range: 0.00~10.00	Mfr's value: 0.30
FA20 Integration time I (S)	Setting range: 0.1~100.0	Mfr's value: 0.3
FA21 Differential time D (S)	Setting range: 0.0~10.0	Mfr's value: 0.0
FA22 PID sampling period (S)	Setting range: 1～500	Mfr's value: 5

Increasing proportion gain, decreasing integration time and increasing differential time can increase the dynamic response of PID closed-loop system. But if P is too high, I is too low or D is too high, system will not be steady.

PID adjusting period is set by FA22. It affects PID adjusting speed.

The following is PID adjusting arithmetic.

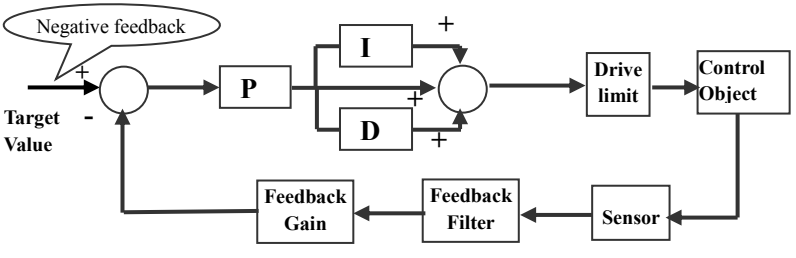

FA23 PID negative frequency output selection	Setting range: 0: Invalid 1: Valid 1. Only negative frequency is output	Mfr's value: 0

When FA23=0, PID adjustor output frequency is FA09~FA12.

When FA23=1, PID adjustor output frequency is –FA12~FA12, minus sign means reverse direction.

When FA23=1, PID adjustor output frequency is –FA12~0, minus sign means reverse direction.

FA24 Switching Timing unit setting	Setting range: 0: hour 1: minute	Mfr's value: 0
FA25 Switching Timing Setting	1～9999	Mfr's value: 100

Switching time is set by F525. The unit is set by F524.

FA26 Under-load protection mode	Setting Range 0: No protection 1: Protection by contactor 2: Protection by PID 3: Protection by current	Mfr's value: 0
FA27 Current threshold of under-load protection (%)	Setting range: 10～150	Mfr's value: 50
FA66 Duration time of under-load protection (S)	Setting range: 0~60	Mfr's value: 1.0

Note: the percent of under-load protection current corresponds to motor rated current.

Under-load protection is used to save energy. For some pumps device, when the output power is too low, the efficiency will get worse, so we suggest that the pumps should be closed.

During the running process, if the load decreases to zero suddenly, it means the mechanical part is broken. For example, belt is broken or water pump is dried up. Under-load protection must occur.

When FA26=1, water signal and lack water signal is controlled by two input terminals. When the lack water

terminal is valid, inverter will enter into the protection status, and EP1 is displayed. When the water terminal is valid, inverter will deactivate EP1 fault automatically.
When FA26=2, PID adjusting frequency runs to max frequency, if inverter current is lower than the product FA27 and rated current, inverter will enter PID under-load protection status immediately, and EP2 is displayed.
When FA26=3, if inverter current is lower than the product of FA27 and rated current, after duration time of FA66, inverter will enter under-load protection, and EP3 is displayed.

FA28 Waking time after protection (min)	1～3000	Mfr's value: 60

After the duration time of FA28, inverter will judge that whether the under-load protection signal disappears. If malfunction is resetted, inverter will run again. Or else inverter will wait until malfunction is resetted. User can reset the inverter by pressing "stop/reset", inverter will stop.

FA29 PID dead time (%)	0.0～10.0	Mfr's value: 2.0

FA29, PID dead time has two functions. First, setting dead time can restrain PID adjustor oscillation. The greater this value is, the lighter PID adjustor oscillation is. But if the value of FA29 is too high, PID adjusting precision will decrease. For example: when FA29=2.0 and FA04=70, PID adjusting will not invalid during the feedback value from 68 to 72.

FA76 Frequency range of under load(Hz)	Setting range: F112～F113	Mfr's value: 5.00
FA77 Running mode of under load	Setting range: 0: invalid 1: free stop 2: stop by decelerating time 3: run at FA76	Mfr's value: 0

・FA77=0: The protection of under load is not enable.
・FA77=1: When the inverter runs normally, the output current is higher than under-load protection current. When the inverter is in the process of under load, the output current is lower than under-load protection current(motor's rated current *FA27), and keep longer time than FA66. Then, the inverter will free stop and displays Er55.
・FA77=2: When the inverter is in the process of under load, the output current is lower than under-load protection current(motor's rated current *FA27), and keep longer time than FA66. Then, the inverter will stop by decelerating time and displays Er55.
・FA77=3: When the inverter is in the process of under load, the output current is lower than under-load protection current(motor's rated current *FA27), and keep longer time than FA66. Then, the inverter will run at FA76. If the load is recovered, the inverter will automatically run at the target frequency.

FA71 Current-limit switchover enabled	Setting range: 0: Invalid 1: Valid	Mfr's value : 1
FA72 Current-limit point 2（%）	Setting range: F608～200	Mfr's value : 190
FA73 Frequency switchover point 1 (Hz)	Setting range: 1.00～FA74	Mfr's value : 10.00
FA74 Frequency switchover point 2 (Hz)	Setting range: FA73～F111	Mfr's value : 20.00

·FA71 is used to limit current in VF mode.

·FA72 is the percentage of motor rated current.

·FA73 and FA74 are as below:

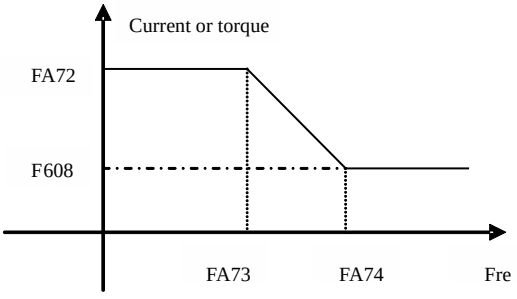
Current or torque
FA72
F608
FA73
FA74
Fre

6.11 Parameters display

H000 Running frequency/target frequency(Hz)		

In stopped status, target frequency is displayed. In running status, running frequency is displayed.

H001 Actual speed/target speed (rpm)		

In stopped status, actual speed is displayed. In running status, target speed is displayed.

H002 Output current (A)		

In running status, output current is displayed. In stopped status, H002=0.

H003 Output voltage (V)		

In running status, output voltage is displayed. In stopped status, H003=0.

H004 Bus voltage (V)		

Bus voltage is displayed by H004.

H005 PID feedback (%)		

PID feedback value is displayed by H005.

H006 Temperature (℃)		

·Inverter temperature is displayed by H006.

H008 linear speed		

Inverter linear speed is displayed by H008.

H009 PID setting value (%)		

PID setting value is displayed by H009.

H017 Current stage speed for multi-stage speed		

In multi-stage speed mode, current stage speed is displayed by H017.

H021 AI1 voltage (digital)		
H025 Current power-on time (minute)		
H026 Current running time (minute)		

Current power-on time and running time are displayed by H025 and H026.

H030 Main frequency source X (Hz)		
H031 Accessorial frequency source Y(Hz)		

Main frequency and accessorial frequency are displayed by H030 and H031.

H036 Accumulative power-on time		
H037 Accumulative running time		

Appendix 1 Trouble Shooting

When malfunction occurs to inverter, don't run by resetting immediately. Check any causes and get it removed if there is any.

Take counter measures by referring to this manual in case of any malfunctions on inverter. Should it still be unsolved, contact the manufacturer. Never attempt any repairing without due authorization.

Table 1-1 **Inverter's Common Cases of Malfunctions**

Fault	Description	Causes	Countermeasures
Err0	Prohibition modify function code	* prohibition modify the function code during running process.	* Please modify the function code in stopped status.
Err1	Wrong password	*Enter wrong password when password is valid * Do not enter password when modifying function code.	* Please enter the correct password.
2: O.C.	Over-current	* too short acceleration time * short circuit at output side * locked rotor with motor * Too heavy load. * parameter tuning is not correct.	*prolong acceleration time; *whether motor cable is broken; *check if motor overloads; *reduce V/F compensation value * measure parameter correctly.
16: OC1	Over-current 1		
3: O.E.	DC Over-Voltage	*supply voltage too high; *load inertia too big *deceleration time too short; *motor inertia rise again * bad effect of dynamic braking *parameter of rotary speed loop PID is set abnormally.	*check if rated voltage is input; *add braking resistance(optional); *increase deceleration time * Enhancing the dynamic braking effect *set the parameter of rotary speed loop PID correctly. * Change to VF control for centrifugal fan.
5: O.L1	Inverter Overload	* load too heavy	*reduce load; *check drive ratio; *increase inverter's capacity
6: L.U.	Under-Voltage Protection	*input voltage on the low side	*check if supply voltage is normal *check if parameter setting is correct.
7: O.H.	Radiator Overheat	*environment temperature too high; *radiator too dirty *install place not good for ventilation; *fan damaged * Carrier wave frequency or compensation curve is too high.	*improve ventilation; *clean air inlet and outlet and radiator; *install as required; *change fan * Decrease carrier wave frequency or compensation curve.
8: O.L2	Motor Overload	* load too heavy	*reduce load; *check drive ratio; *increase motor's capacity
11: ESP	External fault	*External emergency-stop terminal is valid.	*Check external fault.
12: Err3	Current malfunction before running	*Current alarm signal exists before running.	*check if control board is connected with power board well. *ask for help from manufacture.
18: AErr	Line disconnected	* Analog signal line disconnected * Signal source is broken.	* Change the signal line. * Change the signal source.

22: nP	Pressure control	* Pressure is too high when negative feedback. * Pressure is too low when positive feedback.	* Decrease the min frequency of PID.
24: SLP	Dormancy protection	* Inverter enters into the dormancy status.	* Reset inverter to normal status after pressure is normal.
35: OH1	PTC overheat protection	*external relay protection.	*check external heat protection equipment.
45: CE	Communication timeout error	Communication fault	*PC/PLC does not send command at fixed time *Check whether the communication line is connected reliably.
47: EEEP	EEPROM read/write fault	*interference around *EEPROM is damaged.	* remove interferences *contact manufacturer.
49: Err6	Watchdog fault	*Watchdog timeout	*please check watchdog signal
50: oPEn	OPEn protection fault	*oPEn protection terminal is invalid.	* please check oPEn protection terminal.
53: CE 1	Keypad disconnection protection	*Keypad disconnection	*Check communication line

Table 1-2 **Motor Malfunction and Counter Measures**

Malfunction	Items to Be Checked	Counter Measures
Motor not Running	Wiring correct? Setting correct? Too big with load? Motor is damaged? Malfunction protection occurs?	Get connected with power; Check wiring; Checking malfunction; Reduce load; Check against Table 1-1
Wrong Direction of Motor Running	U, V, W wiring correct? Parameters setting correct?	To correct wiring Setting the parameters correctly.
Motor Turning but Speed Change not Possible	Wiring correct for lines with given frequency? Correct setting of running mode? Too big with load?	To correct wiring; To correct setting; Reduce load
Motor Speed Too High or Too Low	Motor's rated value correct? Drive ratio correct? Inverter parameters are set in-corrected? Check if inverter output voltage is abnormal?	Check motor nameplate data; Check the setting of drive ratio; Check parameters setting; Check V/F Characteristic value
Motor Running Unstable	Too big load? Too big with load change? Phase loss? Motor malfunction.	Reduce load; reduce load change, increase capacity; Correct wiring.
Power Trip	Wiring current is too high?	Check input wring; Selecting matching air switch; Reduce load; checking inverter malfunction.

Appendix 2 Products & Structures

E600 series inverter has its power range between 0.4～22 kW. Refer to Tables 2-1 and 2-2 for main data. There may be two (or more than two) kinds of structures for certain products. Please make a clear indication when placing your order.

Inverter should operate under the rated output current, with overload permitted for a short time. However, it shall not exceed the allowable values at working time.

Table 2-1 Product List of E600

Model	Applicable Motor (kW)	Rated Current Output	Structure Code	Cooling Mode	Remarks
E600-0004S2	0.4	2.5	Q1	Air-Cooling	1-phase plastic housing
E600-0007S2	0.75	4.5	Q1	Air- Cooling	
E600-0015S2	1.5	7.0	Q1	Air- Cooling	
E600-0004S2	0.4	2.5	Q2	Air-Cooling	
E600-0007S2	0.75	4.5	Q2	Air- Cooling	
E600-0015S2	1.5	7.0	Q2	Air- Cooling	
E600-0022S2	2.2	10.0	Q2	Air- Cooling	
E600-0007T3	0.75	2.0	Q1	Air- Cooling	3-phase 380V plastic housing
E600-0015T3	1.5	4.0	Q1	Air-Cooling	
E600-0007T3	0.75	2.0	Q2	Air- Cooling	
E600-0015T3	1.5	4.0	Q2	Air- Cooling	
E600-0022T3	2.2	6.5	Q2	Air-Cooling	
E600-0030T3	3.0	7.6	Q2	Air- Cooling	
E600-0040T3	4.0	9.0	Q2	Air- Cooling	
E600-0055T3	5.5	12.0	Q2	Air-Cooling	
E600-0075T3	7.5	17	E4	Air-Cooling	
E600-0110T3	11	23	E5	Air-Cooling	
E600-0150T3	15	32	E5	Air-Cooling	
E600-0185T3	18.5	38	E6	Air-Cooling	
E600-0220T3	22	44	E6	Air-Cooling	

Table 2-2 Structure List

Structure Code	External Dimension [A×B×H]	Mounting Size(W×L)	Mounting Bolt	Remarks
Q1	88×145×149	70×139	M4	Plastic Housing
Q2	107×163×180	88×170	M4	
E4	142×152（159）×235(248)	126×225	M5	
E5	161×170（177）×265(280)	146×255	M5	
E6	210×196（203）×340(358)	194×330	M5	

Note 1: the unit is mm.

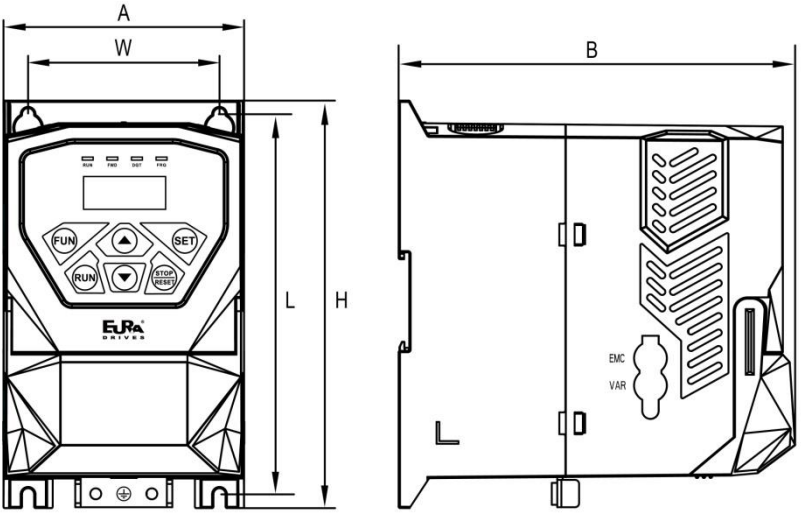

Q1, Q2 Plastic Profile

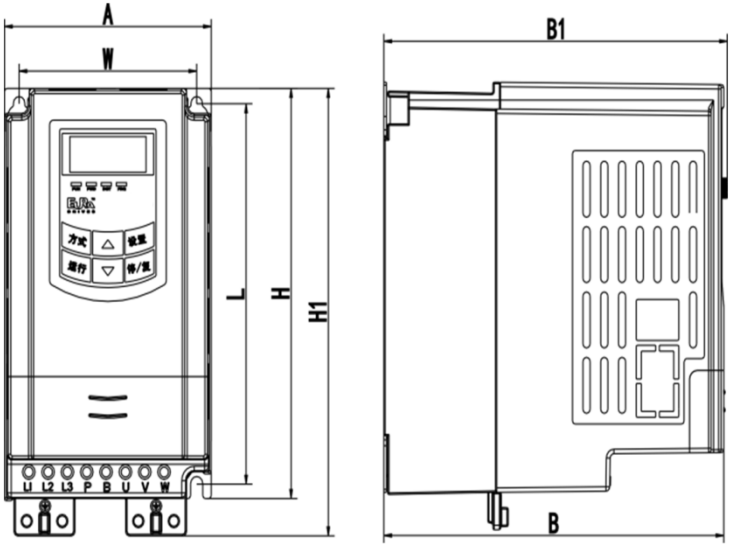

E4, E5, E6 Plastic Profile

Appendix 3 Selection of Braking Resistance

Inverter Models	Applicable Motor Power（kW）	Min resistor value（Ω）	Min power of resistor（W）	Recommended resistor/power
E600-0004S2	0.4	80	200W	150Ω/300W
E600-0007S2	0.75			
E600-0015S2	1.5			80Ω/500W
E600-0022S2	2.2			
E600-0007T3	0.75	145	80W	300Ω/300W
E600-0015T3	1.5	95	150W	150Ω/300W
E600-0022T3	2.2	95	250W	
E600-0030T3	3.0	90	300W	90Ω/1.5kW
E600-0040T3	4.0	90	400W	
E600-0055T3	5.5	90	550W	
E600-0075T3	7.5	90	750W	90Ω/1.5kW
E600-0110T3	11	50	1.1KW	50Ω/1.5kW
E600-0150T3	15	30	1.5KW	30Ω/3kW
E600-0185T3	18.5	30	2.0KW	
E600-0220T3	22	30	2.2KW	

Note: in the occasion of large inertia load, if the braking resistor heat is serious, please adopt the larger power of resistor than recommended resistor.

Appendix 4 Communication Manual (Version 1.8)

I. General

Modbus is a serial and asynchronous communication protocol. Modbus protocol is a general language applied to PLC and other controlling units. This protocol has defined an information structure which can be identified and used by a controlling unit regardless of whatever network they are transmitted.

You can read reference books or ask for the details of MODBUS from manufactures.

Modbus protocol does not require a special interface while a typical physical interface is RS485.

II. Modbus Protocol

2.1 Transmission mode

2.1.1 Format

1) ASCII mode

Start	Address	Function	Data				LRC check		End	
: (0X3A)	Inverter Address	Function Code	Data Length	Data 1	… …	Data N	High-order byte of LRC	Low-order byte of LRC	Return (0X0D)	Line Feed (0X0A)

2）RTU mode

Start	Address	Function	Data	CRC check		End
T1-T2-T3-T4	Inverter Address	Function Code	N data	Low-order byte of CRC	High-order byte of CRC	T1-T2-T3-T4

2.1.2 ASCII Mode

In ASCII mode, one Byte (hexadecimal format) is expressed by two ASCII characters.
For example, 31H (hexadecimal data) includes two ASCII characters'3(33H)','1(31H)'.

Common characters, ASCII characters are shown in the following table:

Characters	**'0'**	**'1'**	**'2'**	**'3'**	**'4'**	**'5'**	**'6'**	**'7'**
ASCII Code	**30H**	**31H**	**32H**	**33H**	**34H**	**35H**	**36H**	**37H**
Characters	**'8'**	**'9'**	**'A'**	**'B'**	**'C'**	**'D'**	**'E'**	**'F'**
ASCII Code	**38H**	**39H**	**41H**	**42H**	**43H**	**44H**	**45H**	**46H**

2.1.3 RTU Mode

In RTU mode, one Byte is expressed by hexadecimal format. For example, 31H is delivered to data packet.

2.2 Baud rate

Setting range: 1200, 2400, 4800, 9600, 19200, 38400, 57600

2.3 Frame structure:

ASCII mode

Byte	Function
1	Start Bit (Low Level)
7	Data Bit
0/1	Parity Check Bit (None for this bit in case of no checking. Otherwise 1 bit)
1/2	Stop Bit (1 bit in case of checking, otherwise 2 bits)

2) RTU mode

Byte	Function
1	Start Bit (Low Level)
8	Data Bit
0/1	Parity Check Bit (None for this bit in case of no checking. Otherwise 1 bit)
1/2	Stop Bit (1 bit in case of checking, otherwise 2 bits)

2.4 Error Check

2.4.1 ASCII mode

Longitudinal Redundancy Check (LRC): It is performed on the ASCII message field contents excluding the 'colon' character that begins the message, and excluding the CRLF pair at the end of the message.
The LRC is calculated by adding together successive 8–bit bytes of the message, discarding any carries, and then two's complementing the result.
A procedure for generating an LRC is:
1. Add all bytes in the message, excluding the starting 'colon' and ending CRLF. Add them into an 8–bit field, so that carries will be discarded.
2. Subtract the final field value from FF hex (all 1's), to produce the ones–complement.
3. Add 1 to produce the twos–complement.

2.4.2 RTU Mode

Cyclical Redundancy Check (CRC): The CRC field is two bytes, containing a 16–bit binary value.
The CRC is started by first preloading a 16–bit register to all 1's. Then a process begins of applying successive 8–bit bytes of the message to the current contents of the register. Only the eight bits of data in each character are used for generating the CRC. Start and stop bits, and the parity bit, do not apply to the CRC.
A procedure for generating a CRC-16 is:
1. Load a 16–bit register with FFFF hex (all 1's). Call this the CRC register.
2. Exclusive OR the first 8–bit byte of the message with the high–order byte of the 16–bit CRC register, putting the result in the CRC register.
3. Shift the CRC register one bit to the right (toward the LSB), zero–filling the MSB. Extract and examine the LSB.
4. (If the LSB was 0): Repeat Step 3 (another shift).
(If the LSB was 1): Exclusive OR the CRC register with the polynomial value A001 hex (1010 0000 0000 0001).
5. Repeat Steps 3 and 4 until 8 shifts have been performed. When this is done, a complete 8–bit byte will have been processed.
   When the CRC is appended to the message, the low-order byte is appended first, followed by the high-order byte.

2.4.3 Protocol Converter

It is easy to turn a RTU command into an ASCII command followed by the lists:

1) Use the LRC replacing the CRC.
2) Transform each byte in RTU command into a corresponding two byte ASCII. For example: transform 0x03 into 0x30, 0x33 (ASCII code for 0 and ASCII code for 3).
3) Add a 'colon' (:) character (ASCII 3A hex) at the beginning of the message.
4) End with a 'carriage return – line feed' (CRLF) pair (ASCII 0D and 0A hex).

So we will introduce RTU Mode in followed part. If you use ASCII mode, you can use the up lists to convert.

2.5 Command Type & Format

2.5.1 The listing below shows the function codes.

code	name	description
03	Read Holding Registers	Read the binary contents of holding registers in the slave. (Less than 10 registers once time)
06	Preset Single Register	Preset a value into holding register

2.5.2 Address and meaning

The part introduces inverter running, inverter status and related parameters setting.

Description of rules of function codes parameters address:

1) Use the function code as parameter address

General Series:

High-order byte: 01~0A (hexadecimal)

Low-order byte: 00~50 (max range) (hexadecimal) Function code range of each partition is not the same. The specific range refers to manual.

For example: parameter address of F114 is 010E (hexadecimal).

parameter address of F201 is 0201 (hexadecimal).

For H section, please convert H0 to 43.

For example: the address of H014 is 430E.

Note: in this situation, it allows to read six function codes and write only one function code. Some function codes can only be checked but cannot be modified; some function codes can neither be checked nor be modified; some function codes cannot be modified in run state; some function codes cannot be modified both in stop and run state.

In case parameters of all function codes are changed, the effective range, unit and related instructions shall refer to user manual of related series of inverters. Otherwise, unexpected results may occur.

2) Use different parameters as parameter address

(The above address and parameters descriptions are in hexadecimal format, for example, the decimal digit 4096 is represented by hexadecimal 1000).

1. Running status parameters

Parameters Address	Parameter Description（read only）
1000	Output frequency
1001	Output voltage
1002	Output current

1003	Pole numbers/ control mode, high-order byte is pole numbers, low-order byte is control mode.
1004	Bus-line voltage
1005	Drive ratio/inverter status High-order byte is drive ratio, low-order byte is inverter status Inverter status: 0X00: Standby mode 0X01: Forward running 0X02: Reverse running 0X04: Over-current (OC) 0X05: DC over-current (OE) 0X07: Frequency Over-load (OL1) 0X08: Under-voltage (LU) 0X09: Overheat (OH) 0X0A: Motor overload (OL2) 0X37: CE1 0X0D: External Malfunction (ESP) 0X0E: Err3 0X12: OC1 0X14: Analog disconnected protection (AErr) 0X17: PP 0X18: Pressure control protection (Np) 0X2F: Communication timeout (CE) 0X33: Watchdog fault (Err6) 0X34: oPEn fault 0X36: STO 0X48: STO1
1007	Inverter radiator temperature
1008	PID given value
1009	PID feedback value
100B	DI terminal status: DI1~DI4—bit0~bit3
100C	Terminal output status : bit0-OUT1 bit2-fault relay
100D	AI1: 0~4095 read input analog digital value
1010	Reserved
1013	Monitoring in which stage speed inverter is. 0000 : no function 0001 : stage speed 1 0010 : stage speed 2 0011 : stage speed 3 0100 : stage speed 4 0101 : stage speed 5 0110 : stage speed 6 0111 : stage speed 7 1000 : stage speed 8 1001 : stage speed 9 1010 : stage speed 10 1011 : stage speed 11 1100 : stage speed 12 1101 : stage speed 13 1110 : stage speed 14 1111 : stage speed 15
1015	Monitoring analog output percent, AO1 （0~100.00）
101A	Output current(when the current is too high, data overflow from 1002) 101A: high 16 bits of output current 101B: low 16 bits of output current
101B	
101C	Transmission ratio
101D	Inverter is ready.

2. Control commands

Parameters Address	Parameters Description（write only）
2000	Command meaning: 0001：Forward running (no parameters） 0002：Reverse running（no parameters） 0003：Deceleration stop　0004：Free stop 0005：Forward jogging start 0006：Forward jogging stop 0007：Reserved　0008：Run（no directions）0009：Fault reset 000A: Forward jogging stop　000B: Reverse jogging stop 000C: Wakeup
2001	Lock parameters 0001：Relieve system locked (remote control locked） 0002：Lock remote control (any remote control commands are no valid before unlocking） 0003: RAM and eeprom are permitted to be written. 0004: Only RAM is permitted to be written, eeprom is prohibited being written.
2002	AO1 output percent is set by PC/PLC. Setting range: 0~1000 Token output analog is 0~100.0%.
2005	To control multi-function output terminal: 1 means token output is valid. 0 means token output is invalid.
2007	
2030	PID feedback given.

3. Illegal Response When Reading Parameters

Command Description	Function	Data
Slave parameters response	The highest-order byte changes into 1.	Command meaning: 0001: Illegal function code 0002: Illegal address 0003: Illegal data 0004: Slave fault [note 2]

Note 2: Illegal response 0004 appears below two cases:

1. Do not reset inverter when inverter is in the malfunction state.
2. Do not unlock inverter when inverter is in the locked state.

2.5.3 Additional Remarks

Expressions during communication process:

Parameter Values of Frequency＝actual value X 100 (General Series)
Parameter Values of Frequency＝actual value X 10　(Medium Frequency Series)
Parameter Values of Time=actual value X 10
Parameter Values of Current=actual value X 10
Parameter Values of Voltage=actual value X 1

Parameter Values of Power=actual value X 100

Parameter Values of Drive Ratio=actual value X 100

Parameter Values of Version No. =actual value X 100

Instruction: Parameter value is the value sent in the data package. Actual value is the actual value of inverter.

After PC/PLC receives the parameter value, it will divide the corresponding coefficient to get the actual value. NOTE: Take no account of radix point of the data in the data package when PC/PLC transmits command to inverter. The valid value is range from 0 to 65535.

Ⅲ Function Codes Related to Communication

Function Code	Function Definition	Setting Rang	Mfr's Value
F200	Source of start command	0: Keypad command; 1: Terminal command; 2: Keypad＋Terminal; 3:MODBUS; 4: Keypad＋Terminal＋MODBUS	4
F201	Source of stop command	0: Keypad command; 1: Terminal command; 2: Keypad＋Terminal; 3:MODBUS; 4: Keypad＋Terminal＋MODBUS	4
F203	Main frequency source X	0: Digital setting memory; 1: External analog AI1; 4: Stage speed control; 5: No memory by digital setting; 9: PID adjusting; 10: MODBUS	0
F900	Inverter Address	1~255	1
F901	Modbus Mode Selection	1: ASCII mode 2: RTU mode 3: Remote keypad	2
F903	Parity Check	0: Invalid 1: Odd 2: Even	0
F904	Baud Rate	0: 1200 1: 2400 2: 4800 3: 9600 4: 19200 5: 38400 6:57600	3

Please set functions code related to communication consonant with the PLC/PC communication parameters, when inverter communicates with PLC/PC.

Ⅳ Physical Interface

4.1 Structure of Field Bus

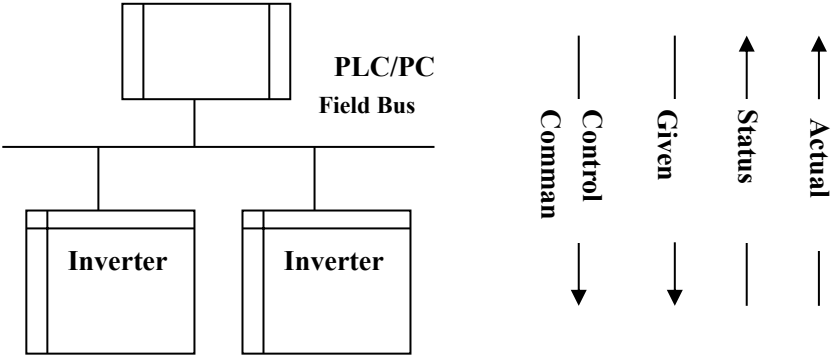

Connecting Diagram of Field Bus

RS485 Half-duplex communication mode is adopted for E600 series inverter. Daisy chain structure is adopted by 485 Bus-line. Do not use 'spur' lines or a star configuration. Reflect signals which are produced by spur lines or star configuration will interfere in 485 communications.

Please note that for the same time in half-duplex connection, only one inverter can have communication with PC/PLC. Should two or more than two inverters upload data at the same time, then bus competition will occur, which will not only lead to communication failure, but higher current to certain elements as well.

4.2. Grounding and Terminal

Terminal resistance of 120Ω will be adopted for terminal of RS485 network, to diminish the reflection of signals. Terminal resistance shall not be used for intermediate network.

No direct grounding shall be allowed for any point of RS485 network. All the equipment in the network shall be well grounded via their own grounding terminal. Please note that grounding wires will not form closed loop in any case.

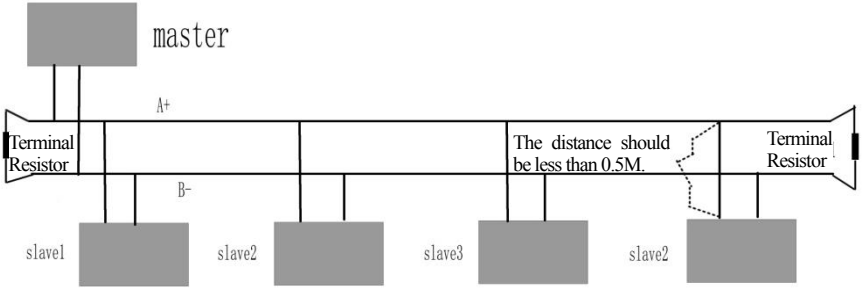

Connecting Diagram of Terminal Resistance

Please think over the drive capacity of PC/PLC and the distance between PC/PLC and inverter when wiring. Add a repeaters if drive capacity is not enough.

All wiring connections for installation shall have to be made when the inverter is disconnected from power supply.

V. Examples

Eg1: In RTU mode, change acc time (F114) to 10.0s in NO.01 inverter.

Query

Address	Function	Register Address Hi	Register Address Lo	Preset Data Hi	Preset Data Lo	CRC Lo	CRC Hi
01	06	01	0E	00	64	E8	1E

Function code F114 Value: 10.0S

Normal Response

Address	Function	Register Address Hi	Register Address Lo	Response Data Hi	Response Data Lo	CRC Lo	CRC Hi
01	06	01	0E	00	64	E8	1E

Function code F114 Normal Response

Abnormal Response

Address	Function	Abnormal code	CRC Lo	CRC Hi
01	86	04	43	A3

The max value of function code is 1. Slave fault

Eg 2: Read output frequency, output voltage, output current and current rotate speed from N0.2 inverter.

Host Query

Address	Function	First Register Address Hi	First Register Address Lo	Register count Hi	Register count L0	CRC Lo	CRC Hi
02	03	10	00	00	04	40	FA

Communication Parameters Address 1000H

Slave Response:

Address	Function	Byte Count	Data Hi	Data Lo	Data Hi	Data Lo	Data Hi	Data Lo	Data Hi	Data Lo	Crc Lo	Crc Hi
02	03	08	13	88	01	90	00	3C	02	00	82	F6

Output Frequency Output Voltage Output Current Numbers of Pole Pairs Control Mode

NO.2 Inverter's output frequency is 50.00Hz, output voltage is 380V, output current is 0.6A, numbers of pole pairs are 2 and control mode keypad control.

Eg 3: NO.1 Inverter runs forwardly.

Host Query:

Address	Function	Register Hi	Register Lo	Write status Hi	Write status Lo	CRC Lo	CRC Hi

01	06	20	00	00	01	43	CA

Communication parameters address 2000H **Forward running**

Slave Normal Response:

Address	Function	Register Hi	Register Lo	Write status Hi	Write status Lo	CRC Lo	CRC Hi
01	06	20	00	00	01	43	CA

Normal Response

Slave Abnormal Response:

Address	Function	Abnormal Code	CRC Lo	CRC Hi
01	86	01	83	A0

The max value of function code is 1. Illegal function code (assumption)

Eg4: Read the value of F113, F114 from NO.2 inverter

Host Query：

Address	Function	Register Address Hi	Register Address Lo	Register Count Hi	Register Count L0	CRC Lo	CRC Hi
02	03	01	0D	00	02	54	07

Communication Parameter Address F10DH **Numbers of Read Registers**

Slave Normal Response:

Address	Function	Byte count	The first parameters status Hi	The first parameters status Lo	The second parameters status Hi	The second parameters status Lo	CRC Lo	CRC Hi
02	03	04	03	E8	00	78	49	61

The actual value is 10.00. **The actual value is 12.00.**

Slave Abnormal Response：

Address	Function Code	Abnormal Code	CRC Lo	CRC Hi
02	83	08	B0	F6

The max value of function code is 1. **Parity check fault**

Appendix 5 Zoom Table of Function Code

Basic parameters: F100-F160

Function Code	Function Definition	Setting Range	Mfr's Value	Change
F100	User's Password	0～9999	0	√
F102	Inverter's Rated Current (A)		Subject to inverter model	*
F103	Inverter Power (kW)		Subject to inverter model	*
F104	Voltage level		Subject to inverter model	
F105	Software Edition No.	1.00～10.00	Subject to inverter model	*
F106	Control mode	2: V/F	2	×
F107	Password Valid or Not	0: invalid; 1: valid	0	√
F108	Setting User's Password	0～9999	8	√
F109	Starting Frequency (Hz)	0.0～10.00	0.00	√
F110	Holding Time of Starting Frequency (S)	0.0～999.9	0.0	√
F111	Max Frequency (Hz)	F113～650.0	50.00	√
F112	Min Frequency (Hz)	0.00～F113	0.50	√
F113	Target Frequency (Hz)	F112～F111	50.00	√
F114	1st Acceleration Time (S)	0.1～3000	subject to inverter model	√
F115	1st Deceleration Time (S)	0.1～3000		√
F116	2nd Acceleration Time (S)	0.1～3000		√
F117	2nd Deceleration Time (S)	0.1～3000		√
F118	Turnover Frequency (Hz)	15.00～650.0	50.00	×
F119	Reference of setting accel/decel time	0: 0~50.00Hz 1: 0~max frequency 2: 0~target frequency	0	×
F120	Forward/Reverse Switchover dead-Time	0.0～3000	0.0	√
F121	Reserved			
F122	Reverse Running Forbidden	0: invalid; 1: valid	0	×
F123	Minus frequency is valid in the mode of combined speed control.	0：Invalid；1：valid	0	×
F124	Jogging Frequency	F112～F111	5.00	√
F125	Jogging Acceleration Time	0.1～3000	subject to inverter model	√
F126	Jogging Deceleration Time	0.1～3000		√

F127	Skip Frequency A	0.00～650.0	0.00	√
F128	Skip Width A	0.00~2.50	0.00	√
F129	Skip Frequency B	0.00～650.0	0.00	√
F130	Skip Width B	0.00~2.50	0.00	√
F131	Running Display Items	0－Present output frequency / function code 1 － Current output rotary speed 2－Output current 4－Output voltage 8－PN voltage 16－PID feedback value 32－Temperature 128－Linear speed 256－PID given value	0+1＋2＋4＋8＝15	√
F132	Display items of stop	0: frequency / function code 1: Keypad jogging 2: Target rotary speed 4: PN voltage 8: PID feedback value 16: Temperature 64: PID given value	2＋4＝6	√
F133	Drive Ratio of Driven System	0.10～200.0	1.0	√
F134	Transmission-wheel radius	0.001～1.000	0.001	√
F136	Slip compensation	0～10	0	×
F137	Modes of torque compensation	0: Linear compensation; 1: Square compensation; 2: User-defined multipoint compensation	0	×
F138	Linear compensation	1～20	subject to inverter model	×
F139	Square compensation	1：1.5；　2：1.8； 3：1.9；　4：2.0	1	×
F140	Voltage compensation point frequency	0.00～F142	1.00	×
F141	Voltage compensation point 1 (%)	0～30	0	×
F142	User-defined frequency point 2	F140～F144	5.00	×
F143	User-defined voltage point 2	0～100	13	×

F144	User-defined frequency point 3	F142～F146	10.00	×
F145	User-defined voltage point 3	0～100	24	×
F146	User-defined frequency point 4	F144～F148	20.00	×
F147	User-defined voltage point 4	0～100	45	×
F148	User-defined frequency point 5	F146～F150	30.00	×
F149	User-defined voltage point 5	0～100	63	×
F150	User-defined frequency point 6	F148～F118	40.00	×
F151	User-defined voltage point 6	0～100	81	×
F152	Output voltage corresponding to turnover frequency	10~100	100	×
F153	Carrier frequency setting	subject to inverter model	subject to inverter model	×
F154	Automatic voltage rectification	Setting range: 0: Invalid 1: Valid 2:Invalid during deceleration process	0	×
F155	Digital accessorial frequency setting	0.00～F111	0	×
F156	Digital accessorial frequency polarity setting	0~1	0	×
F157	Reading accessorial frequency			△
F158	Reading accessorial frequency polarity			△
F160	Reverting to manufacturer values	0: Invalid 1: Valid 21: revert user macro 1 22: revert user macro 2	0	×

Running control mode: F200-F230

F200	Source of start command	0: Keypad command; 1: Terminal command; 2: Keypad＋Terminal; 3:MODBUS; 4: Keypad＋Terminal＋MODBUS	4	×
F201	Source of stop command	0: Keypad command; 1: Terminal command; 2: Keypad＋Terminal; 3:MODBUS; 4: Keypad＋Terminal＋MODBUS	4	×

F202	Mode of direction setting	0: Forward running locking; 1: Reverse running locking; 2: Terminal setting 3: Keypad setting 4: Keypad setting and direction in memory	0	×
F203	Main frequency source X	0: Digital setting memory; 1: External analog AI1; 4: Stage speed control; 5: No memory by digital setting; 9: PID adjusting; 10: MODBUS	0	×
F204	Accessorial frequency source Y	0: Digital setting memory; 1: External analog AI1; 4: Stage speed control; 5: PID adjusting;	0	×
F205	Reference for selecting accessorial frequency source Y range	0: Relative to max frequency; 1: Relative to main frequency X	0	×
F206	Accessorial frequency Y range	0～150	100	×
F207	Frequency source selecting	0: X; 1: X+Y; 2: X or Y (terminal switchover); 3: X or X+Y (terminal switchover); 4: Combination of stage speed and analog 5: X-Y 6: X+Y-Y_{MAX}*50% 7: combination 1 of stage speed and digital	0	×
F208	Terminal two-line/three-line operation control	0: No function; 1: Two-line operation mode 1; 2: Two-line operation mode 2; 3: three-line operation mode 1; 4: three-line operation mode 2; 5: start/stop controlled by direction pulse	0	×
F209	Selecting the mode of stopping the motor	0: stop by deceleration time; 1: free stop 2: Stop by DC braking	0	×
F210	Frequency display accuracy	0.01～10.00	0.01	√
F211	Speed of digital control	0.01～100.00	5.00	√
F212	Direction memory	0: Invalid 1: Valid	0	√
F213	Auto-starting after repowered on	0: invalid; 1: valid	0	√
F214	Auto-starting after reset	0: invalid; 1: valid	0	√

F215	Auto-starting delay time	0.1～3000.0	60.0	√
F216	Times of auto-starting in case of repeated faults	0～5	0	√
F217	Delay time for fault reset	0.0～10.0	3.0	√
F218	Reserved			
F219	EEPROM write operation	0:enabled to write 1:prohibit writing	1	√
F220	Frequency memory after power-down	0: invalid; 1: valid	0	√
F223	Main frequency coefficient	0.0～100.0	100.0	√
F224	When target frequency is lower than Min frequency	0: stop 1: run at min frequency	0	×
F277	Third Acceleration Time (S)	Setting range: 0.1~3000	subject to inverter model	√
F278	Third Deceleration Time (S)			√
F279	Fourth Acceleration Time (S)			√
F280	Fourth Deceleration Time (S)			√

Multifunctional Input and Output Terminals: F300-F330

F300	Relay token output		1	√
F301	DO1 token output		14	√
F303	DO output types selection	0: level output 1 : pulse output	0	√
F304	S curve beginning stage proportion	2.0～50.0	30.0	√
F305	S curve ending stage proportion	2.0～50.0	30.0	√
F306	Accel/decel mode	0：Straight-line 1: S curve	0	×
F307	Characteristic frequency 1	F112～F111	10.00	√
F308	Characteristic frequency 2	F112～F111	50.00	√
F309	Characteristic frequency width (%)	0～100	50	√
F310	Characteristic current (A)	0～5000.0	Rated current	√
F311	Characteristic current width (%)	0～100	10	√
F312	Frequency arrival threshold (Hz)	0.00～5.00	0.00	√
F316	DI1 terminal function setting	0: no function; 1: running terminal; 2: stop terminal; 3: multi-stage speed terminal 1; 4: multi-stage speed terminal 2;	11	√
F317	DI2 terminal function setting		9	√

F318	DI3 terminal function setting	5: multi-stage speed terminal 3; 6: multi-stage speed terminal 4; 7: reset terminal; 8: free stop terminal; 9: external emergency stop terminal; 10: acceleration/deceleration forbidden terminal; 11: forward run jogging; 12: reverse run jogging; 13: UP frequency increasing terminal; 14: DOWN frequency decreasing terminal; 15: “FWD” terminal; 16: “REV” terminal; 17: three-line type input “X” terminal; 18: accel/decel time switchover 1; 21: frequency source switchover terminal; 34: Accel / decel switchover 2 37: Common-open PTC heat protection 38: Common-close PTC heat protection 42: oPEn protection terminal. 49: PID paused 53: Watchdog 60: Communication timeout 2 61: Start-stop terminal	15	√
F319	DI4 terminal function setting		16	√
F324	Free stop terminal logic	0: positive logic (valid for low level); 1: negative logic (valid for high level)	0	×
F325	External emergency stop terminal logic		0	×
F326	Watchdog time	0.0~3000.0	10.0	√
F327	Stop mode	0: Free stop 1: Deceleration to stop	0	×
F328	Terminal filter times	1～100	20	√
F329	Run command of start terminal	0: Valid 1: Invalid	0	√
F330	Diagnostics of DIX terminal			√
F331	Monitoring AI1		Read only	
F335	Relay output simulation	Setting range: 0：Output active. 1：Output inactive.	0	×
F336	DO1 output simulation		0	×
F338	AO1 output simulation	Setting range: 0～4095	0	×
F340	Selection of terminal negative logic	0: Invalid 1: DI1 negative logic	0	√

		2: DI2 negative logic 4: DI3 negative logic 8: DI4 negative logic		
F343	Delay time of DI1 ON	0.00~99.99	0.00	√
F344	Delay time of DI2 ON		0.00	√
F345	Delay time of DI3 ON		0.00	√
F346	Delay time of DI4 ON		0.00	√
F351	Delay time of DI1 OFF		0.00	√
F352	Delay time of DI2 OFF		0.00	√
F353	Delay time of DI3 OFF		0.00	√
F354	Delay time of DI4 OFF		0.00	√
F359	Stop command priority	0: Invalid 1: Valid	0	√
F360	DO terminal negative logic	0: Invalid 1: DO1 negative logic 4: Relay 1	0	√

F400	Lower limit of AI1 channel input (V)	0.00～F402	0.04	○
F401	Corresponding setting for lower limit of AI1	0.00～2.00	1.00	√
F402	Upper limit of AI1 channel input (V)	F400～10.00	10.00	○
F403	Corresponding setting for upper limit of	0.00～2.00	2.00	√
F404	AI1 channel proportional gain K1	0.0～10.0	1.0	√
F405	AI1 filtering time constant (S)	0.01～10.0	0.10	√
F418	AI1 channel 0Hz voltage dead zone	0.00～1.00	0.00	√
F423	AO1 output range	0：0～5V；1：0～10V or 0-	1	√
F424	AO1 lowest corresponding frequency	0.0～F425	0.05	√
F425	AO1 highest corresponding frequency	F424～F111	50.00	√
F426	AO1 output compensation	0～120	100	√
F427	AO2 output range	0：0～20mA；1：4～20mA	0	√
F428	AO2 lowest corresponding frequency	0.0～F429	0.05	√
F429	AO2 highest corresponding frequency	F428～F111	50.00	√
F430	AO2 output compensation	0～120%	100	√

F431	AO1 analog output signal selecting	0: Running frequency; 1: Output current; 2: Output voltage; 3: AI1 7: Given by PC/PLC 8: Target frequency	0	√
F460	AI1channel input mode	0: straight line mode 1: folding line mode	0	×
F462	AI1 insertion point A1 voltage value	F400～F464	2.00	×
F463	AI1 insertion point A1 setting value	0.00～2.00	1.20	×
F464	AI1 insertion point A2 voltage value	F462～F466	5.00	×
F465	AI1 insertion point A2 setting value	0.00～2.00	1.50	×
F466	AI1 insertion point A3 voltage value	F464～F402	8.00	×
F467	AI1 insertion point A3 setting value	0.00～2.00	1.80	×

Multi-stage Speed Control: F500-F580

F500	Stage speed type	0: 3-stage speed; 1: 15-stage speed; 2: Max 8-stage speed auto circulating	1	×
F501	Selection of Stage Speed Under Auto-circulation Speed Control	2～8	7	√
F502	Selection of Times of Auto- Circulation Speed Control	0～9999（when the value is set to 0, the inverter will carry out infinite circulating）	0	√
F503	Status after auto circulation running Finished	0: Stop 1: Keep running at last stage speed	0	√
F504	Frequency setting for stage 1 speed	F112～F111	5.00	√
F505	Frequency setting for stage 2 speed	F112～F111	10.00	√
F506	Frequency setting for stage 3 speed	F112～F111	15.00	√
F507	Frequency setting for stage 4 speed	F112～F111	20.00	√
F508	Frequency setting for stage 5 speed	F112～F111	25.00	√
F509	Frequency setting for stage 6 speed	F112～F111	30.00	√
F510	Frequency setting for stage 7 speed	F112～F111	35.00	√
F511	Frequency setting for stage 8 speed	F112～F111	40.00	√
F512	Frequency setting for stage 9 speed	F112～F111	5.00	√
F513	Frequency setting for stage 10 speed	F112～F111	10.00	√
F514	Frequency setting for stage 11 speed	F112～F111	15.00	√
F515	Frequency setting for stage 12 speed	F112～F111	20.00	√
F516	Frequency setting for stage 13 speed	F112～F111	25.00	√
F517	Frequency setting for stage 14 speed	F112～F111	30.00	√
F518	Frequency setting for stage 15 speed	F112～F111	35.00	√

F519-F533	Acceleration time setting for the speeds from Stage 1 to stage 15	0.1～3000S	Subject to inverter model	√
F534-F548	Deceleration time setting for the speeds from Stage 1 to stage 15	0.1～3000S		√
F549-F556	Running directions of stage speeds from Stage 1 to stage 8	0: forward running; 1: reverse running	0	√
F557-F564	Running time of stage speeds from Stage 1 to stage 8	0.1～3000S	1.0	√
F565-F572	Stop time after finishing stages from Stage 1 to stage 8.	0.0～3000S	0.0	√
F573-F579	Running directions of stage speeds from Stage 9 to stage 15.	0: forward running; 1: reverse running	0	√
F580	Stage-speed mode	0: Stage speed mode 1 1: Stage speed mode 2	0	√

Auxiliary Functions: F600-F677

F600	DC Braking Function Selection	0: Invalid; 1: braking before starting; 2: braking during stopping; 3: braking during starting and stopping	0	√
F601	Initial Frequency for DC Braking	0.20～50.00	1.00	√
F602	DC Braking efficiency before Starting	0~15	5	√
F603	DC Braking efficiency During Stop		5	√
F604	Braking Lasting Time Before Starting	0.0～30.00	0.50	√
F605	Braking Lasting Time During Stopping	0.0～30.00	0.50	√
F607	Selection of Stalling Adjusting Function	Setting range: 0~2:Reserved 3: Voltage/current control 4: Voltage control 5: Current control	3	√
F608	Stalling Current Adjusting (%)	25～FA72	160	√
F609	Stalling Voltage Adjusting (%)	110～200	Mfr's value: 1-phase: 130 3-phase: 140	√
F610	Stalling Protection Judging Time (S)	0.0～3000.0	60.0	√
F611	Dynamic Braking threshold (V)	T3: 600～2000 S2/T2: 320~2000	Subject to inverter model	△
F612	Dynamic braking duty ratio (%)	0～100	100	×
F613	Speed track	0: invalid 1: valid 2: valid at the first time	0	×
F614	Speed track mode	Setting range: 0: Speed track from frequency	0	×

		memory 1: Speed track from zero 2: Speed track from max frequency		
F615	Speed track rate	1～100	20	×
F618	Delay time of speed track (S)	0.5～60.0	1.5	×
F620	Brake delay turn-off time	0.0 (brake not closed when stop) 0.1～3000	5.0	√
F638	Parameters copy enabled	0: Copy forbidden 1: Parameters download 1 (voltage level and power are totally same) 2: Parameters download 2 (without considering voltage level and power)	1	×
F639	Parameters copy code	2000~2999	Subject to version of software	△
F640	Parameter copy type	0: Copy all parameters 1: Copy parameters (except motor parameters from F801 to F810/F844)	1	×
F643	Multi-functional key	Setting range: 0: Invalid 1: FWD jogging 2: REV jogging 3:Switchover between local/remote 4. Reverse run control	0	×
F656	Time of DC braking when stop	0.00~30.00	0	√○
F660	Voltage-limit current-limit adjustment coefficient	0.01~10.00	2.00	√

Timing Control and Protection: F700-F760

F700	Selection of terminal free stop mode	0: free stop immediately; 1: delayed free stop	0	√
F701	Delay time for free stop and programmable terminal action	0.0～60.0	0.0	√
F704	Inverter Overloading pre-alarm Coefficient (%)	50~100	80	
F705	Overloading adjusting gains	50~100	80	×
F706	Inverter Overloading coefficient%	120～190	150	×
F707	Motor Overloading coefficient %	20～100	100	×
F708	Record of The Latest Malfunction Type	Setting range: 2: Over current (OC) 3: over voltage (OE) 4: input phase loss (PF1)		△

F709	Record of Malfunction Type for Last but One	5: inverter overload (OL1) 6: under voltage (LU) 7: overheat (OH) 8: motor overload (OL2) 11: external malfunction (ESP) 13. studying parameters without motor (Err2) 16: Over current 1 (OC1) 17: output phase loss (PF0) 18: Aerr analog disconnected 20: EP/EP2/EP3 under-load 22: nP pressure control 23: Err5 PID parameters are set wrong 45: Communication timeout (CE) 46: Speed track fault (FL) 49: Watchdog fault (Err6)		△
F710	Record of Malfunction Type for Last but Two			△
F711	Fault Frequency of The Latest Malfunction			△
F712	Fault Current of The Latest Malfunction			△
F713	Fault PN Voltage of The Latest Malfunction			△
F714	Fault Frequency of Last Malfunction but One			△
F715	Fault Current of Last Malfunction but			△
F716	Fault PN Voltage of Last Malfunction			△
F717	Fault Frequency of Last Malfunction			△
F718	Fault Current of Last Malfunction but			△
F719	Fault PN Voltage of Last Malfunction			△
F720	Record of overcurrent protection fault			△
F721	Record of overvoltage protection fault			△
F722	Record of overheat protection fault			△
F723	Record of overload protection fault			△
F725	Under-voltage protection	0: reset manually 1: reset automatically	2	×
F726	Overheat	0: invalid; 1: valid	1	×
F729	Under-voltage filtering constant	0.1～60.0	5	√
F730	Overheat protection filtering constant	0.1～60.0	5.0	√
F732	Under-voltage protection voltage threshold (V)	T2/S2: 120~450 T3: 300~450	Subject to inverter model	○
F737	Over-current 1 protection	0: Invalid 1:Valid	1	

F738	Over-current 1 protection coefficient	0.50～3.00	2.50	
F739	Over-current 1 protection record			△
F741	Analog disconnected protection	0: Invalid 1: Stop and AErr displays. 2: Stop and AErr is not displayed. 3: Inverter runs at the min frequency. 4: Reserved.	0	√
F742	Threshold of analog disconnected protection (%)	1~100	50	○
F745	Threshold of pre-alarm overheat	0~100	80	√○
F747	Carrier frequency auto-adjusting	0: Invalid 1: Valid	1	√
F752	Overload quitting coefficient	0.1~20.0	1.0	√
F753	Selection of overload protection	0: Normal motor 1: variable frequency motor	1	×
F754	Zero-current threshold (%)	0~200	5	×
F755	Duration time of zero-current	0~60	0.5	√
F759	Carrier-frequency ratio	3～15	7	×
F761	Switchover mode of FWD/REV	0: At zero 2: at start frequency	0	×
F770	Auxiliary version No.			△

Motor parameters: F800-F880

F801	Rated power	0.1～1000.0		×
F802	Rated voltage	1～1300		×
F803	Rated current	0.2～6553.5		×
F804	Number of motor poles	2～100	4	×
F805	Rated rotary speed	1～39000		×
F810	Motor rated frequency	1.00~650.00	50.00	×

Communication parameter: F900-F930

F900	Communication Address	1~255: single inverter address 0: broadcast address	1	√
F901	Communication Mode	1: ASCII 2: RTU 3: Remote keypad	2	√○
F902	Stop bits	1~2	2	√
F903	Parity Check	0: Invalid 1: Odd 2: Even	0	√
F904	Baud Rate	0: 1200; 1: 2400; 2: 4800; 3: 9600 ; 4: 19200 5: 38400 6: 57600	3	√

F905	Communication timeout period (S)	0.0~3000.0	0.0	√
F907	Time 2 of communication timeout (S)	0.0~3000.0	0.0	√
F930	Keypad disconnected protection(s)	0~10 0: Invalid	0	√

PID parameters: FA00-FA80

FA00	Water supply mode	0: Single pump (PID control mode) 1: Fixed mode 2: Timing interchanging	0	×
FA01	PID adjusting target given source	0: FA04 1: AI1	0	×
FA02	PID adjusting feedback given source	1: AI1 4: Communication given 5:Running current	1	√
FA03	Max limit of PID adjusting (%)	FA04～100.0	100.0	√
FA04	Digital setting value of PID adjusting (%)	FA05～FA03	50.0	√
FA05	Min limit of PID adjusting (%)	0.0～FA04	0.0	√
FA06	PID polarity	0: Positive feedback 1: Negative feedback	1	×
FA07	Dormancy function selection	0: Valid 1: Invalid	1	×
FA09	Min frequency of PID adjusting (Hz)	Max(F112, 0.1)~F111	5.00	√
FA10	Dormancy delay time (S)	0~500.0	15.0	√
FA11	Wake delay time (S)	0.0~3000	3.0	√
FA12	PID max frequency(Hz)	FA09~F111	50.00	√
FA18	Whether PID adjusting target is changed	0: Invalid 1: Valid	1	×
FA19	Proportion Gain P	0.00~10.00	0.30	√
FA20	Integration time I (S)	0.1~100.0	0.3	√
FA21	Differential time D (S)	0.0~10.0	0.0	√
FA22	PID sampling period (S)	1～500	5	√
FA23	PID negative frequency output selection	0: Invalid 1: Valid 2: Only negative frequency is output	0	√

FA27	Current threshold of under-load protection (%)	10～150	50	√
FA29	PID dead time (%)	0.0～10.0	2.0	√
FA66	Duration time of under-load	0~60	1.0	√
FA71	Current-limit switchover enabled	0: Invalid 1: Valid	1	×
FA72	Current-limit point 2（%）	F608～200	190	√
FA73	Frequency switchover point 1 (Hz)	1.00～FA74	10.00	√
FA74	Frequency switchover point 2 (Hz)	FA73～F111	20.00	√
FA76	Frequency range of under load(Hz)	Setting range: F112～F113	Mfr's value: 5.00	√
FA77	running mode of under load	Setting range: 0: invalid 1: free stop 2: stop by decelerating time 3: run at FA76	Mfr's value: 0	√

Parameters display:

H000	Running frequency / target frequency (Hz)			Δ
H001	Speed with load / target speed			Δ
H002	Output current (A)			Δ
H003	Output voltage（V）			Δ
H004	PN voltage（V）			Δ
H005	PID feedback value（%）			Δ
H006	Temperature（℃）			Δ
H008	Linear speed			Δ
H009	PID given value（%）			Δ
H017	Current stage speed for multi-stage speed			Δ
H021	Monitoring AI1			Δ
H025	Power-On time (h)			Δ
H026	Running time (h)			Δ
H028	Reserved			Δ
H030	Main frequency X（Hz）			Δ
H031	Accessorial frequency Y(Hz)			Δ

H036	Accumulative power-on time			△
H037	Accumulative running time			△

Note: × indicating that function code can only be modified in stop state.

√ indicating that function code can be modified both in stop and run state.

△ indicating that function code can only be checked in stop or run state but cannot be modified.

○ indicating that function code cannot be initialized as inverter restores manufacturer's value but can only be modified manually.

* indicating that function code can only be modified by manufacture.

Appendix 6 Input filter model and dimension

1. Input filter model

Inverter model	Filter mode	Remarks
E600-0004S2	FN2060-6-06	1-phase plastic housing
E600-0007S2	FN2060-10-06	
E600-0015S2	FN2060-20-06	
E600-0022S2	FN2060-20-06	
E600-0007T3	FN3258-7-44	3-phase 380V plastic housing
E600-0015T3	FN3258-7-44	
E600-0022T3	FN3258-16-44	
E600-0030T3	FN3258-16-44	
E600-0040T3	FN3258-16-44	
E600-0055T3	FN3258-16-44	
E600-0075T3	FN3258-42-33	
E600-0110T3	FN3258-42-33	
E600-0150T3	FN3258-42-33	
E600-0185T3	FN3258-55-34	
E600-0220T3	FN3258-55-34	

2. Dimension

1) FN2060 dimension and installation

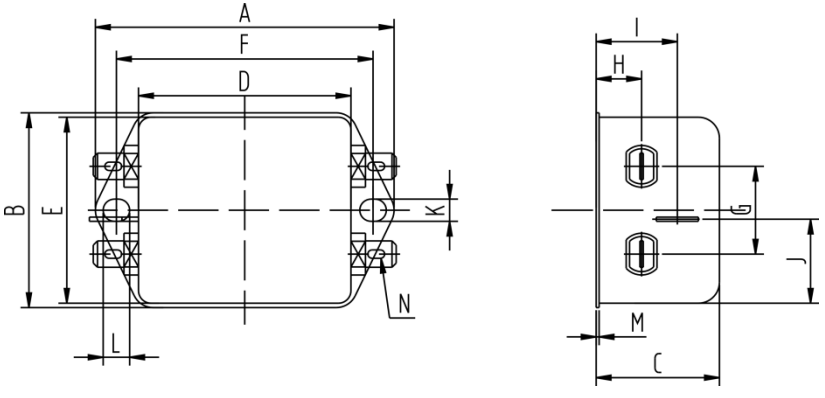

Model	FN2060-6-06	FN2060-10-06	FN2060-20-06
A	71	85	113.5±1
B	46.6	54	57.5±1
C	29.3	30.3	45.4±1
D	50.5	64.8	94±1
E	44.5	49.8	56
F	61	75	103
G	21	27	25
H	10.8	12.3	12.4
I	19.3	20.8	32.4
J	20.1	19.9	15.5
K	5.3	5.3	4.4
L	6.3	6.3	6
M	0.7	0.7	0.9
N	6.3×0.8		

2) FN3258 dimension and installation

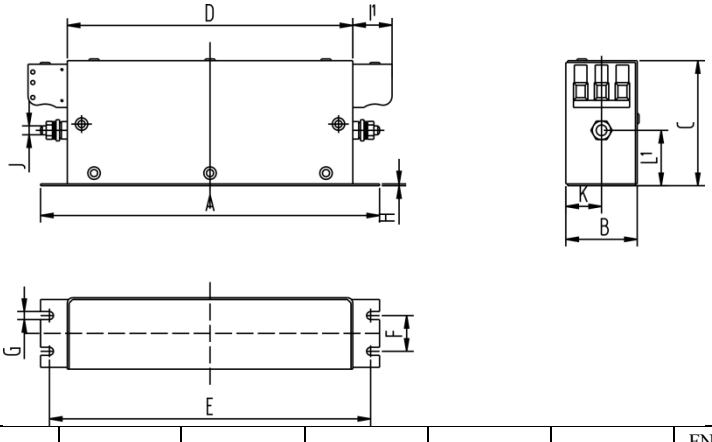

Model	FN3258-7 -44	FN3258-16 -44	FN3258-42 -33	FN3258-55 -34	FN3258-75 -34	FN3258-100 -35
A	190	250	310	250	270	270
B	40	45	50	85	80	90
C	70	70	85	90	135	150
D	160	220	280	220	240	240
E	180	235	295	235	255	255
F	20	25	30	60	60	65
G	4.5	5.4	5.4	5.4	6.5	6.5
H	1	1	1	1	1.5	1.5
I1	22	22	25	39	39	45
J	M5	M5	M6	M6	M6	M10
K	20	22.5	25	42.5	40	45
L1	29.5	29.5	37.5	26.5	70.5	64

Note:

1. E600 series inverter without built-in filter satisfies the CE requirements only with an EMC filter installed on the power input side.

2. **When frequency inverter model does not include R3, the customer should select above options.**

202212290 2.A