FTDI Chip

FTDI Chip
USB Solutions

The USB Bridging Solution Specialist

Modules

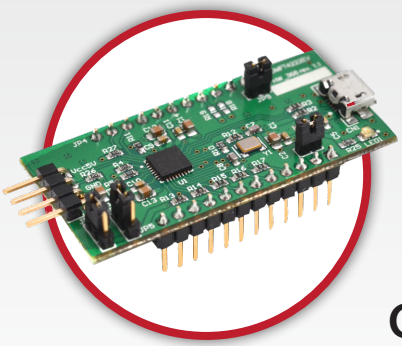

ICs

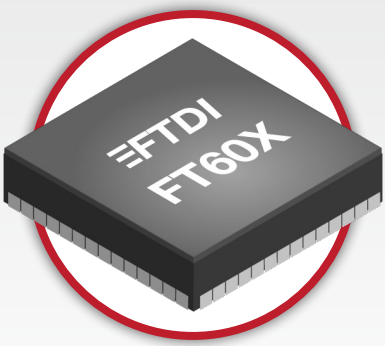

Cables

www.ftdichip.com

FTDI - Design Made Easy

@FTDIchip

USB AS *EASY* AS *123*

FTDI Chip develops innovative silicon solutions that enhance interaction with today's technology. When a designer needs to add a USB port, rest assured that FTDI Chip has a full range of USB solutions to get the job done.

The Universal Serial Bus (USB) interface is now established as the de-facto interface for connecting systems with a reliable, low-cost digital link. USB has expanded beyond PC usage, and can now be found in all market segments, including Industrial, Medical, Consumer, Communications, Networking, and more. Enabling designers to implement USB quickly into a design, FTDI Chip provides total solutions including silicon chips, development tools, application notes, and software support. Expertise in USB bridges provides seamless integration for a variety of interfaces such as UART, FIFO, I2C, SPI, PWM and GPIO, where the bridge converts the signalling and protocol from the selected interface to USB. USB solutions are delivered in packages as small as 10 pin DFN (3x3mm); in modules that can be inserted into boards for development and production; or in cables that bridge USB to numerous interfaces. Whenever your development or product needs USB, check out FTDI Chip (www.ftdichip.com) for complete solutions that can shorten your design time, while providing robust system implementations.

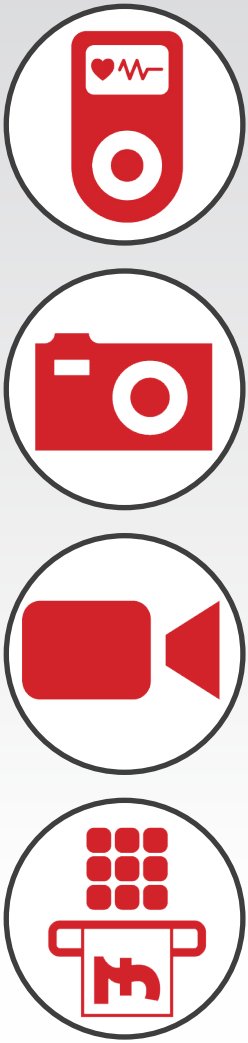

Extensive USB Portfolio

Whether your design needs silicon chips, cables, or modules, check out FTDI Chip's large portfolio of USB and system level products.

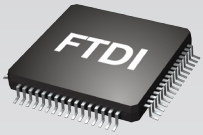

Peripheral Or Host

USB connectivity designs are constructed from two distinct functional capabilities: a host and a device/peripheral type. As part of the total solution, FTDI Chip is able to offer both types of capabilities. With over 30 USB peripheral chips offered in 5 product families, designers can choose the device which best matches their system need. On the USB host side, the FT311D targets the Android ecosystem and joins the Vinculum family which provides system level capabilities with its micro-controller capability, USB host, and USB peripheral support.

Speed

FTDI Chip devices are aimed at full, high and super speed solutions. SuperSpeed USB 3.0 provides the greatest level of data throughput, while hi-speed and full speed devices continue to be a robust, growing market where matching system needs with device features can provide the optimum USB implementation.

Advanced Features

To conserve PCB area and offer additional system value, FTDI Chip adds unique features to enhance USB functionality, like battery charging detection which enables faster charging. FTDI Chip also offers devices linking one USB port to 1, 2, or 4 application interfaces without requiring a USB hub. Save space, power, and system cost when EEPROM (MTP) memory, or unique clocking features are utilized in your system design.

Software

Drivers for most major operating systems such as Windows, MAC OS, Android and Linux are available for free download thus allowing for easy integration with minimum development effort.

The Vinculum family of host controllers is also supported with free, precompiled firmware as well as a free toolchain for designers wishing to tailor the firmware to their specific requirements.

Modules

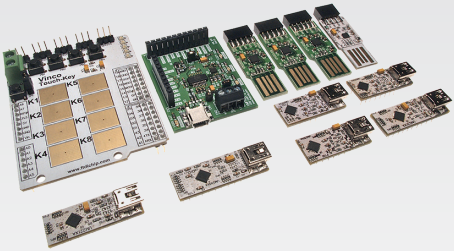

Development modules are available to enable rapid design development. The modules are available in a variety of mechanical formats to allow easy bread-boarding or immediate access to the bridge interfaces. Additionally application modules are available which provide specific system functionality.

Cables

Similar to the module solutions are a range of cables offering TTL, RS232, RS422 or RS485 level interfaces. These cables can be used for development purposes or as accessories for accessing existing products over USB..

USB 3.0 SUPER SPEED
BRIDGE SOLUTION (FT600 SERIES)

The FT600 is the first release in a brand new SuperSpeed series from FTDI Chip. The device provides a USB3.0 SuperSpeed to FIFO bridge, which provides up to 5Gbps of bandwidth. With optional 16 and 32 bit FIFO interfaces, the FT600 enables connectivity for numerous applications including high resolution cameras and displays, multifunction printers and much more. The device supports Link Power Management (LPM) to enable greater power savings, and also supports Suspend and Remote Wakeup signaling. Moreover, the device provides Battery Charge Detection (BCD) and is supported on major operating systems including Windows, Linux and Mac.

Simple to connect and control. No additional firmware development required. Just "fit and forget".

This innovative new product is available in two space saving packages – 56QFN and 76QFN.

	Application Interface	Channels	Configurable IO Pins	Package
FT600Q	16 bit FIFO	1 / 2 / 4	2	QFN56
FT601Q	32 bit FIFO	1 / 2 / 4	2	QFN76

Applications that need to transfer data over USB at faster rates benefit from the FT600:

- Multi Function Printers
- Scanners
- High resolution video cameras
- High resolution displays
- Professional still image cameras
- Data acquisition systems that require high bandwidth
- FPGA & MCU development boards that require high bandwidth connectivity

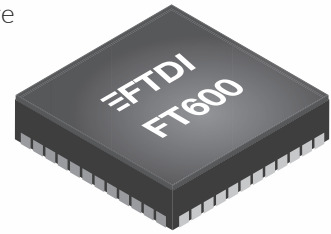

USB 2.0 HI-SPEED
BRIDGE SOLUTION

H Chip Series

Fast, flexible, multi-channel USB bridges

	Application Interface	Channels	Clocking	EEPROM	Data Throughput	Package
FT232H	UART ASYNC FIFO SYNC FIFO MPSSE	1	External (12MHz)	External	12MBaud 10MByte/s 40MByte/s 30Mbit/s	48 QFN 48 LQFP
FT2232H	UART ASYNC FIFO SYNC FIFO MPSSE x 2	2	External (12MHz)	External	12MBaud 10MByte/s 40MByte/s 30Mbit/s	64 QFN 64 LQFP 56 VQFN
FT4232H	UART MPSSE x2	4	External (12MHz)	External	12MBaud 30Mbit/s	64 QFN 64 LQFP 56 VQFN
FT4222H	SPI/I2C (Master/ Slave) GPIO	4 Channel SPI slave selection	External (12MHz)	Internal OTP	Upto 27Mbps	32 VQFN

- IO Levels 3.3V (5V tolerant)
- Typical operating current 70mA
- Extended Temperature Range: –40°C to +85°C

In addition to the higher data rates these devices offer, (upto 40Mbytes/s) when compared to full speed solutions, the Hi-Speed series also offers a range of multi-channel interfacing. The benefits of a multi channel bridge is that the system BOM is reduced by taking away the need for a USB hub chip. Additionally, each channel of the device appears to the host PC as a separate device enabling each channel to be independently configured for different modes, e.g. UART, MPSSE or FIFO and with different parameters such as 4 UARTS all operating with different baud rates.

For portable or battery operated devices the FT4222H also offers support for battery charger detection, enabling higher charge currents to be requested thus reducing battery charge times.

USB 2.0 FULL SPEED
BRIDGE SOLUTION

X Chip Series

Optimised for small footprint, low power and battery charger detection.

	Application Interface	Channels	Configureable CBUS Pins	MTP Memory	Data Throughput	Package
FT200XD	I²C	1	1	Internal	3.4Mbit/s	10 DFN
FT201XQ	I²C	1	7	Internal	3.4Mbit/s	16 QFN
FT201XS						16 SSOP
FT220XQ	4-Bit SPI/ FT1248	1	1	Internal	500kByte/s	16 QFN
FT220XS						16 SSOP
FT221XQ	8-Bit SPI/ FT1248	1	1	Internal	1MByte/s	20 QFN
FT221XS						20 SSOP
FT230XQ	Basic UART	1	4	Internal	3MBaud	16 QFN
FT230XS						16 SSOP
FT231XQ	Full Handshake UART	1	4	Internal	3MBaud	20 QFN
FT231XS						20 SSOP
FT234XD	Basic UART	1	1	Internal	3MBaud	12 DFN
FT240XQ	8-bit FIFO	1	2	Internal	1MByte/s	24 QFN
FT240XS						24 SSOP

- IO Levels 1.8V to 3.3V (5V tolerant)
- Typical operating current 8mA
- Battery Charger Detection
- Internal data buffering: TX – 512 bytes, RX – 512 bytes
- Internally generated clocking – No external crystal required.
- Extended Temperature Range: –40°C to +85°C

The X-chip series for full speed USB bridge solutions is the latest generation in full speed USB bridging technology, offering the widest range of interface options all backed up with robust driver support on Windows, Linux, MAC OSX and WinCE.

USB 2.0 FULL SPEED
BRIDGE SOLUTION

R Chip Series

Optimised for minimal external components on a PCB design

	Application Interface	Channels	Configureable CBUS Pins	EEPROM	Data Throughput	Package
FT232RL	UART	1	5	Internal	3MBaud	28 SSOP
FT232RQ						32 QFN
FT245RL	8-bit FIFO	1	0	Internal	1MByte/s	28 SSOP
FT245RQ						32 QFN

- IO Levels 1.8V to 5V
- Typical operating current 15mA
- Internal data buffering: TX - 128 bytes, RX – 256 bytes
- Internally generated clocking - No external crystal required.
- Extended Temperature Range: -40oC to +85oC

The R chip solution offers a highly integrated solution combining USB protocol handling, internal clock control and EEPROM capabilities in one IC package.

USB 2.0 FULL SPEED
BRIDGE SOLUTION

FT12 Series

Flexible, programmable bridges with in-built DMA engines.

	Application Interface	Endpoints Supported	Selectable Endpoints	Battery Charger Detection	Data Throughput	Package
FT120	Parallel (MCU)	6	Bulk Isochronous Interrupt	NO	Upto 1MByte/s	28 TSSOP 28 QFN
FT121	SPI slave	8	Bulk Isochronous Interrupt	YES	Upto 1MByte/s	16 TSSOP 16 QFN
FT122	Parallel (MCU)	8	Bulk Isochronous Interrupt	YES	Upto 1MByte/s	28 TSSOP 28 QFN

- IO Levels 3.3V to 5V
- Typical operating current 7mA
- Extended Temperature Range: -40°C to +85°C

While the other USB bridge devices focus on a fixed vendor USB class with silicon and host driver support both supplied and configured for maximum compatibility and efficiency the FT12 series allows for something a little different.

The FT12 series provides a fully configurable device controlled by an external MCU allowing the device to be identified as a variety of USB device classes such as BOMs, HID, CDC etc thus enabling generic pre-loaded system drivers to access the USB port.

Applications:

- Printers
- Industrial Control
- FPGA USB expansion ports

HID CLASS USB SOLUTIONS

USB devices are not all the same. The descriptors for a device categorise the devices into different classes.

Classes include mass storage (for memory devices), CDC (for communication devices e.g. wireless dongles), printer, audio and HID (Human Interface Devices such as a keyboard) classes. FTDI's traditional USB bridge devices use a special vendor class, as USB to Serial is not strictly covered by the standard classes. This is why FTDI also offer free dedicated drivers for their devices.

However as the Internet of Things evolves and more and more devices are connecting on a variety of different embedded systems a market is emerging which is more suited to a standard class of device such as HID. The key benefit to the end user is that it is more likely a standard class driver will exist for these many platforms as opposed to vendor class drivers.

Selecting HID as the standard bridge class FTDI has developed the FT260 Full speed HID class device enabling USB to bridge with I2C Master, UART or GPIO peripherals. This opens up access to many sensor applications critical in a smart connected world.

	Application Interfacce	Channels	Configurable IO Pins	Package
FT260Q	I2C, UART, GPIO	1 / 2	14	QFN28
FT260S	I2C, UART, GPIO	1 / 2	14	SSOP28

- Standard USB device class requires no custom drivers
- Configurable interface selection for UART, I2C or both
- Wide IO voltage supporting from 1.8V to 3.3V output and 1.8V to 5V input
- Battery Charger Detection supported
- Provide internal E-Fuse for some basic configuration and external EEPROM for future settings
- Internally generated clock – NO external crystal required.

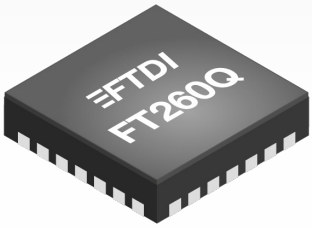

USB HOST SOLUTIONS

As mobility accelerates, the need for host support in tablets, handsets, and consumer equipment becomes critical to enable USB connections. FTDI Chip is expanding its USB host solutions with a focus on: Android Open Accessories Initiative, add-on USB host capability for USB2.0 Hi-Speed, and continued support for system level solutions that include USB technology (16 bit micro-controller, USB host, and USB device capabilities).

Integrated circuits that provide USB host ports in a system solution are provided in the Vinculum family of devices. The Vinculum II (VNC2) provides ample hardware support including 16 bit microcontroller, USB host and device capabilities, embedded flash memory, and extensive interface options. In addition, the VNC2 has an extensive suite of application ROM design files, and a toolchain for developing application specific designs.

	VNC2	FT311D	FT312D	FT313H
Description	Programmable USB 2.0 Host/Device Controller	ANDROID USB Host	ANDROID USB Host	Programmable USB 2.0 Host
USB Speed	Full (12Mbps) / Low speed (1.5Mbps)	Full-Speed (12Mbps)	Full-Speed (12Mbps)	Hi-Speed (480Mbps)
USB Transfer Types	Bulk, Interrupt, Isochronous	Bulk	Bulk	Bulk, Interrupt, Isochronous
No. of USB ports	2	1	1	1
No. of external channels	Flexible	1	1	1
Supported External Interfaces	ASYNC FIFO, SYNC FIFO, UART, 2 x SPI SLAVE, 1 x SPI MASTER, GPIO, PWM, DEBUG PORT	GPIO, PWM, UART, I^2C Master, SPI Master, SPI Slave	UART	8/16 bit multiplexed bus, SRAM, NOR
Core	16/32-bit Harvard MCU Core			
Internal Memory	16kB RAM 256kB FLASH	–	512B-Rx, 256B-Tx	320 B
Data rates	Up to 6MBaud	Up to 1MBaud	Up to 1MBaud	2-25 MB/s
Configuration Storage	Internal flash	–	–	Internal Registers
Clocking	12MHz Crystal	12MHz Crystal	12MHz Crystal	6MHz Crystal
Operating temp.	–40°C to +85°C	–40°C to +85°C	–40°C to +85°C	-40°C to +85°C
Core supply	1.8V	1.8V	1.8V	3.3V
IO Supply	3.3V	3.3V	3.3V	1.8V to 3.3V
Packages	32/48/64 LQFP and QFN	32 LQFP and QFN	32 LQFP and QFN	64 QFN/LQFP/TQFP

Android Host (FT311D)

The FT311D IC is designed to specifically host Android platforms that support Android Open Accessories Mode (Android 3.1 onwards). This chip will enumerate and enable an Android platform to provide a bridge to a variety of platforms selectable from 3 GPIO lines. The interfaces include GPIO, UART, PWM, I2C Master, SPI Master and SPI slave. Packaged in 32 pin QFN or LQFP options the device offers a small, reliable bridge to allow Android devices such as mobile phones or tablets to communicate with peripheral hardware over USB. The device does not require any drivers to be loaded on the Android platform and draws no power from the Android USB port as the FT311D is the USB host.

To support the FT311D host chip, FTDI is offering a development kit and GPIO interface board to jump-start engineers' designs and provide easy access and integration into users' end systems.

With this fixed function, bridged host chip, designers can quickly and easily add USB functionality into products and connect to the expanding Android ecosystem.

USB2.0 Hi-Speed Host Solution (FT313H)

The FT313H offers a fast rate of data transfer at 480Mpbs. The device interfaces a single USB channel to a parallel bus, with DMA engine for optimized data transfer. The device also supports battery charge host emulation

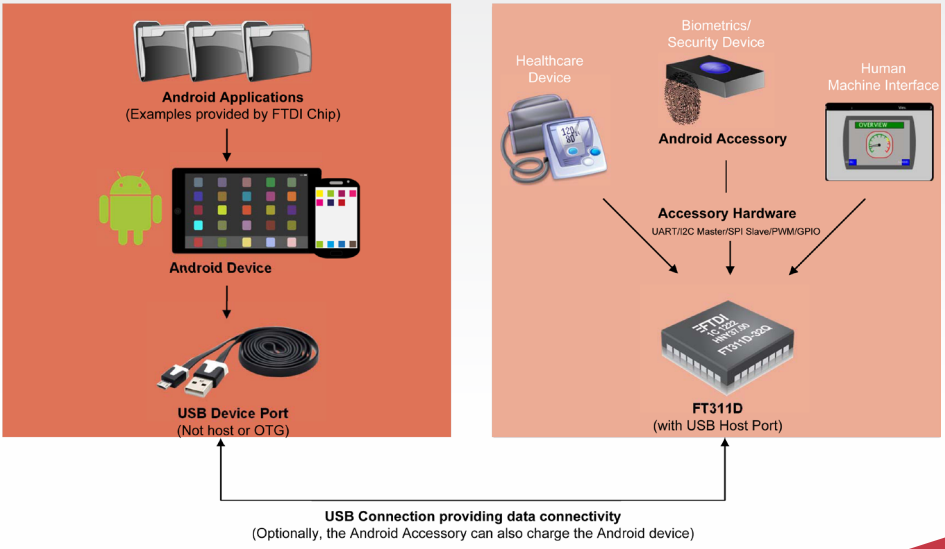

USB TO RS232 DESIGN.

The simplest and most common use of FTDI devices is for the purpose of bridging USB ports to a UART peripheral interface. The UART interface may operate at 1.8V to 5V in which case it is possible to realize the design with only one IC such as the FT231X which will handle all the protocol translation on chip. If the design is connecting to either RS232, RS422, RS485 then the design will require an additional transceiver to convert the FT231X UART signals to the appropriate levels.

	TTL UART	RS232	RS422	RS485
Signal Swing	0V to 3V3/5V	+/-5V to +/-15V	+/-2V	+/-1.5V
Termination	Single ended	Single Ended	Differential	Differential
Transmission length	~2m	~15m	~1200m	~1200m
No of transmitters/ receivers on a line	1 Driver 1 Receiver	1 Driver 1 Receiver	1 Driver 10 Receiver	32 Driver 32 Receiver

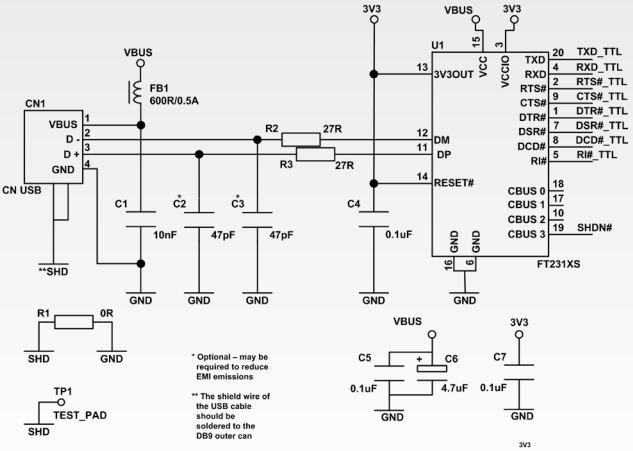

It is possible for the design to simply use RXD and TXD signals but with FTDI solutions the option to implement full modem control is also provided.

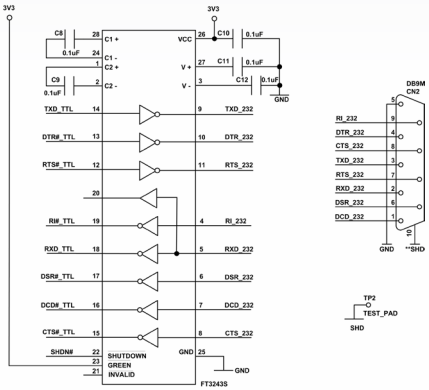

X-CHIP BATTERY CHARGER DETECTION

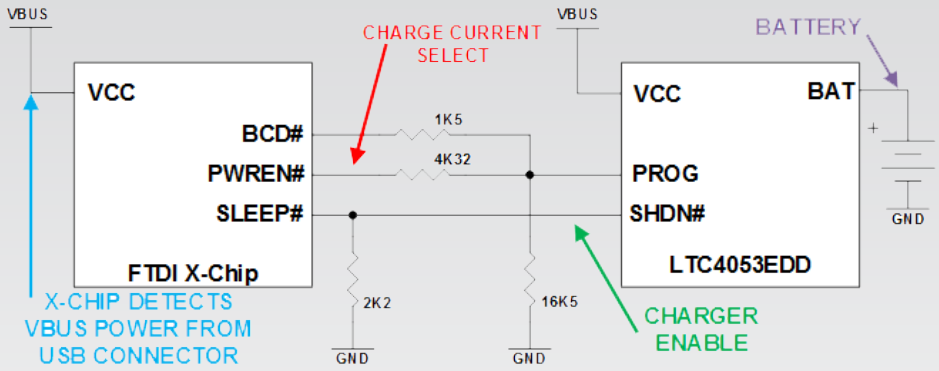

VBUS	BCD#	PWREN#	*SLEEP#	CHG CURRENT
0V	LOGIC 0	LOGIC 0	LOGIC 0	0 – IN SHUTDOWN
5V DEDICATED CHARGER	LOGIC 0	LOGIC 1	LOGIC 1	1.1A
5V STANDARD DOWNSTREAM PORT (ENUMERATED)	LOGIC 1	LOGIC 0	LOGIC 1	0.44A

*SLEEP# can be programmed to be de-activated when connected to a dedicated charger port in the TF-X MTP ROM.

Charge current is determined by the resistance to gnd on the prog pin of the LTC4053

More information in Application Note 175: Battery charger detection over usb with FT-X devices

DEVICE DRIVER SUPPORT

Developing a USB solution is a two step process

1. The silicon required to translate the different protocols.
2. The drivers to communicate with the silicon.

FTDI offers among the most comprehensive range of OS supporting drivers on the market, thus facilitating one hardware solution to run on multiple platforms .

Drivers from FTDI can create virtual COM ports to allow legacy apps to control the USB device while talking to a UART interface or bus level drivers offering extended device control.

WINDOWS CERTIFIED	OTHERS
Windows 10 (32/64 bit)	Linux
Windows 8.1 (32/64 bit)	MAC OSX
Windows 8 (32/64 bit)	Windows CE (v4.2 and above)
Windows 7 (32/64 bit)	Windows RT
Windows Server 2012 R2 x64	Android*
Windows Server 2008 R2 x64	

*Android OS is supported though a JAVA interface, J2xx offering similar functionality to the bus level driver used on the other OS.

+Virtual COM Port drivers are shipped as part of the MAC OSX and Linux OS. As such this is often the simplest driver to use on these OS as to use the bus driver requires the VCP driver to first be disabled.

+Drivers for Windows must be installed by the user. However VCP and bus level drivers are supplied in a combined driver and can be installed together. 3 installation options are provided by FTDI.

1. Windows update will install drivers if the PC is connected to the internet and the device is plugged in. This is perhaps the simplest for most users.
2. Windows provides a setup wizard that will start automatically if the device is plugged in and windows update is not used. This allows the most user control over the installation and setup.
3. A setup exe which automates the installation for non networked PCs. This 3rd option is a hybrid of options 1 and 2.

DEVELOPMENT MODULES

USB HOST SUPPORT

UMFT311EV

Description: FT311 host development module connects to an Android USB device port. This development system enables the bridge from SPI master, SPI slave, I2C, UART, GPIO, and PWMto a USB host port.

USB connector: 1 x Type-A

UMFT313EV

Description: FT313 Hi-Speed USB host development module

USB connector: 1 x Type-A

V2EVAL

Description: Motherboard for VNC2 daughter cards. Includes connectors for all IO and USB plus a prototyping area

USB connector: Type-B for debug port. 2 x Type-A

Notes: Supports 3 VNC2 package sizes

EXT32 (32 pin daughter card)

EXT48 (48 pin daughter card)

EXT64 (64 pin daughter card)

VINCO

Description: Arduino inspired form factor for VNC2 development. Based on VNC2-64L and includes additional 10-bit ADC

USB connector: Type A and mini-B

Notes: May be used with Arduino or VNC2 shields

VNC2 Debugger / Programmer

Description: VNC2 Programmer/debugger module for use with the IDE development tools

USB connector: Mini-B

Notes: Used to load and debug firmware in VNC2 devices, via the debug pin

H-CHIP SERIES SUPPORT

USB2.0 Hi-Speed support with multi-channel capabilities

UM232HB

Chip: FT232HL

USB connector: PCB tracks only

Form Factor: Breakout module

Application: USB to UART, ASYNC FIFO, SYNC FIFO, or MPSSE

UM232H

Chip: FT232HL

USB connector: Mini-B

Form Factor: 28 pin 0.6" wide DIP

Application: USB to UART, ASYNC FIFO, SYNC FIFO, or MPSSE

FT2232H Mini Module

Chip: FT2232HL

USB connector: Mini-B

Form Factor: Two 26 pin double row headers

Application: USB to UART, ASYNC FIFO, SYNC FIFO, or MPSSE x 2

FT4232H Mini Module

Chip: FT4232HL

USB connector: Mini-B

Form Factor: Two 26 pin double row headers

Application: USB to UART or MPSSE x 2

FT4232H Hi-SpeedSerial/Hub

Chip: FT4232HL

USB connector: Type A

Form Factor: 36 pin 0.6" wide DIP with one USB upstream connector and two downstream connectors.

Application: USB to UART, MPSSE or a USB hub. May act as an expansion device to VNC2 USB host.

UMFT4222EV

Chip: FT4222H

USB connector: Type A

Form Factor: Standard 20.2mm (0.8") wide 24 pin DIP socket. Pins are on a 2.60mm (0.1") pitch.

Application: USB to SPI/I2C master/ slave.

UMFT4222HPROG

Chip: FT4222H

USB connector: Type A

Form Factor: 42.38mm x 41.23mm board mounted with components and connectors.

Application: For Programming the FT4222H IC descriptors.

X-CHIP SERIES SUPPORT

An advanced USB2.0 Full Speed Family with optimized power, footprint and feature set

UMFTxxxXB*

Description: Breakout Module
Supported IC's: FT200XD, FT201XQ, FT220XQ, FT230XQ
USB connector: PCB tracks only

UMFTxxxXA*

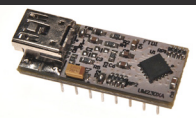

Description: 0.3" wide development
Supported IC's: FT201XS, FT220XS, FT221XS, FT230XS, FT231XS, FT240XS
USB connector: Mini-B

UMFTxxxXE*

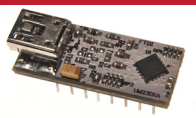

Description: 0.6" wide development
Supported IC's: FT201XS, FT221XS, FT231XS, FT240XS
USB connector: Mini-B

UMFT231XC

Description: Battery Charger Detection Module
Supported IC's: FT231XS
USB connector: Micro-B

* 'xxx' correlates to the numbers of the supported part types

R-CHIP SERIES SUPPORT

FTDI Chip's popular USB2.0 Full Speed Family

UM232R

Chip: FT232RL
USB connector: Type B
Form Factor: 24 pin, 0.6" wide DIP
Application: USB to UART

MM232R

Chip: FT232RQ
USB connector: Type B
Form Factor: 16 pin 0.1" pitch
Application: USB to UART

UB232R

Chip: FT232RQ
USB connector: Type B
Form Factor: 8 contacts, 0.1" pitch
Application: USB to UART

EVAL232R

Chip: FT232RL
USB connector: Type B
Form Factor: USB to DB9 converter
Application: USB to RS232

USB-Key

Chip: FT232RL
USB connector: Type A
Form Factor: Dongle
Application: ChipID

UM245R

Chip: FT245RL
USB connector: Type B
Form Factor: 24 pin 0.6" wide DIP
Application: USB to FIFO

FT12 SERIES SUPPORT

Inspired by the D12, industry standard, with value-added features and footprints

UMFT12XEV

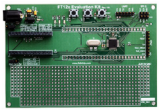

Description: Development system with LPC1114 micro- controller for use with daughter- cards for system development

UMFT120DC

Chip: FT120T
USB Connector: Micro-B
Footprint: 28 pin 0.8" wide DIP

UMFT121DC

Chip: FT121T
USB Connector: Micro-B
Footprint: 14 pin 0.8" wide DIP

UMFT122DC

Chip: FT122T
USB Connector: Micro-B
Footprint: 28 pin 0.8" wide DIP

DEVELOPMENT MODULES

– *FT60x-CHIP SERIES SUPPORT*

An advanced USB3.0 Super Speed Family with multichannel support

UMFT600A

Chip: FT600Q
USB Connector: USB 3.0 micro-B connector to USB host
Application connector: HSMC connector to external FIFO master
Application: USB to multi-channel FIFO (16 bits wide)

UMFT600X

Chip: FT600Q
USB Connector: USB 3.0 micro-B connector to USB host
Application connector: FMC connector to external FIFO master
Application: USB to multi-channel FIFO (16 bits wide)

UMFT601A

Chip: FT601Q
USB Connector: USB 3.0 micro-B connector to USB host
Application connector: HSMC connector to external FIFO master
Application: USB to multi-channel FIFO (32 bits wide)

UMFT601X

Chip: FT601Q
USB Connector: USB 3.0 micro-B connector to USB host
Application connector: FMC connector to external FIFO master
Application: USB to multi-channel FIFO (32 bits wide)

FT260 HID Class Series Support

Full Speed HID Class devices ideal for USB sensors and no driver installation required

UMFT260EV1A

Chip: FT260
USB Connector: micro-B Application connector
Form factor: 24 pin 0.8" wide DIP
Application: HID class USB to UART or I2C Bridge

UMFTPD3A

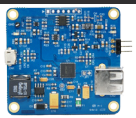

Description: Programmer module to link FT_PROG with either FT260 or FT4222 devices. Provides programming voltages to access on chip OTP for updating device descriptors.

CABLE SOLUTIONS

USB TO LEGACY RS232 CONVERTER CABLES

	PART NUMBER	IO LEVELS
Premium USB to Legacy RS232 Converter	US232R-10	RS232
	US232R-100	
	US232R-500	
USB-Serial Converter	UT232R-200	
	UT232R-500	RS232
Chipi-x	CHIPI-X10	RS232

USB TO LEGACY RS232 OR RS422 OR RS485 CONVERTER CABLES

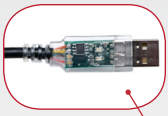

	PART NUMBER	IO LEVELS
RS232 Converter	USB-RS232-WE-1800-BT_0.0	RS232
	USB-RS232-WE-1800-BT_3.3	
	USB-RS232-WE-1800-BT_5.0	
	USB-RS232-WE-5000-BT_0.0	
	USB-RS232-WE-5000-BT_3.3	
	USB-RS232-WE-5000-BT_5.0	
RS422 Converter	USB-RS422-WE-1800-BT	RS422
	USB-RS422-WE-5000-BT	
RS485 Converter	USB-RS485-WE-1800-BT	RS485
	USB-RS485-WE-5000-BT	

USB TO TTL SERIAL CABLES

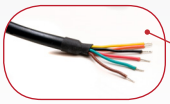

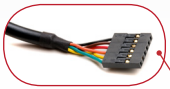

	PART NUMBER	IO LEVELS
Type A USB to wire end TTL Serial	TTL-232RG-VREG1V8-WE	1.8V
	TTL-232RG-VREG3V3-WE	3.3V
	TTL-232RG-VSW3V3-WE	3.3V
	TTL-232RG-VSW5V-WE	5V
	TTL-232RG-VIP-WE	1.8V to 5.25V
	TTL-232R-3V3-WE	3.3V
	TTL-232R-5V-WE	5V
Type A USB to SIP Connector	TTL-232R-5V	5V
	TTL-232R-3V3	3.3V
	TTL-232R-3V3-2MM	3.3V
Type A USB to 3.5mm Audio Jack	TTL-232R-5V-AJ	5V
	TTL-232R-3V3-AJ	3.3V

FTDI Chip's instant USB converter cables provide connectivity options from USB to RS232, RS422, or RS485 and TTL based signalling interfaces. The cables feature integrated electronics assemblies by using FTDI Chip's ICs, to provide an easy-to-use USB conversion. Custom cable versions are available upon request.

MAX BAUD RATE	RX/TX LED	CABLE LENGTH	CABLE TERMINATION	TEMPERATURE RANGE	NOTES
1 Mbaud	RX/TX LED	10cm	DB9	−20°C to +80°C	Retaining nut on DB9 connector.
		1m			
		5m			
1 Mbaud	–	2m	DB9	−20°C to +80°C	Thumb screw on DB9 connector.
		5m			
250 kBaud	–	10cm	DB9	−40°C to +85°C	

POWER OUTPUT PIN	MAX BAUD RATE	RX/TX LED	CABLE LENGTH	CABLE TERMINATION	TEMPERATURE RANGE	NOTES
0V	1 Mbaud	RX/TX LED	1.8m	Wire ended	-40°C to +85°C	Option of transparent or black USB connector.
3.3V			1.8m			
5V			1.8m			LEDs for visual indication of traffic on the cable.
0V			5m			
3.3V			5m			
5V			5m			Also available as PCB.
0V	3 Mbaud	RX/TX LED	1.8m	Wire ended	−40°C to +85°C	
			5m			
5V	3 Mbaud	RX/TX LED	1.8m	Wire ended	−40°C to +85°C	
			5m			

POWER OUTPUT PIN	MAX BAUD RATE	RX/TX LED	CABLE LENGTH	CABLE END	TEMPERATURE RANGE	NOTES
1.8V@100mA	3 Mbaud	RX/TX LED	1.8m	Wire ended	−40°C to +85°C	LEDs for visual indication of traffic on the cable.
3.3V@250mA						
3.3V@50mA						
5V@450mA						Transparent USB connector.
1.8V to 5.25V						
5V@75mA		–				Available as PCB.
5V@75mA						
5V@75mA	3 Mbaud	–	1.8m	Single in line socket	−40°C to +85°C	0.1" pitch
5V@75mA						2mm pitch, for VMUSIC2 and VDRIVE2
5V@75mA						
–	3 Mbaud	–	1.8m	Audio Jack	−40°C to +85°C	Tip - Tx, Ring - Rx, Sleeve - Ground

1 adj.logic threshold level (from external supply)

* All cables are powered from the host USB port, except TTL-232RG-VIP-WE
All cables use FTDI royalty free drivers - available on Windows, MAC, Linux, and WinCE
All cables FCC/CE approved • Custom cable options on request subject to MOQ/NRE

ABOUT FTDI CHIP

FTDI Chip develops innovative silicon solutions that enhance interaction with today's technology. The company prides itself on its existence as a USB bridging solution specialist, and applies this principle by supporting engineers with highly sophisticated, feature-rich, robust and simple-to-use products. This enables creation of electronic designs with higher performance, fewer peripheral components, lower power budgets and diminished board real estate.

FTDI Chip's long-established, continuously expanding Universal Serial Bus (USB) product line boasts such universally recognized product brands as the ubiquitous R-Chip, X-Chip, Vinculum, and H-Series.

FTDI Chip is a fab-less semiconductor company, partnered with the world's leading foundries. The company is headquartered in Glasgow, UK, with research and development facilities located in Glasgow, Singapore and Taipei (Taiwan), plus regional sales and technical support sites in Glasgow, Taipei, Tigard (Oregon, USA) and Shanghai (China).

www.youtube.com/FTDIChip
www.facebook.com/FTDIDesignMadeEasy
@FTDIChip

Global Headquarters

Europe, Middle East, Africa

Unit 1, 2 Seaward Place
Centurion Business Park,
Glasgow, G41 1HH,
UK
Tel: +44 (0) 141 429 2777
Fax: +44 (0) 141 429 2758
E-Mail (Sales):
sales1@ftdichip.com
E-Mail (Support):
support1@ftdichip.com

Americas

7130 SW Fir Loop, Tigard
Oregon 97223-8160,
USA
Tel: +1 (503) 547 0988
Fax: +1 (503) 547 0987
E-Mail (Sales):
us.sales@ftdichip.com
E-Mail (Support):
us.support@ftdichip.com

Asia/Pacific

Room 1103,
No. 666 West Huaihai Road
Shanghai, 200052,
China
Tel: +86 (0)21 6235 1596
Fax: +86 (0)21 6235 1595
E-Mail (Sales):
cn.sales@ftdichip.com
E-Mail (Support):
cn.support@ftdichip.com

2F, No. 516, Sec. 1,
NeiHu Road
Taipei 114,
Taiwan Republic Of China
Tel: +886-2-8797 1330
Fax: +886-2-8751 9737
E-Mail (Sales):
tw.sales1@ftdichip.com
E-Mail (Support):
tw.support1@ftdichip.com