LF-BDD020-0500-42

Compact DALI Dimmable NFC Constant Current LED Driver

Product family features

— DALI&PUSH dimmable

— Dimming range: 1 to 100%

— Output current tolerance: 1%

— Up to 88% efficiency

— Output voltage range: 9-42V

— Low THD <10%

— Suitable for Class I/II light fixtures

— 5 years guarantee

Product family benefits

— Advanced functions: EL, CorridorDIM, CLO

— DALI-2 part ext. 251, 252 and 253

— Output current adjustable and parameter set via DALI programmer or NFC

— 2 sets of L/N at the input convenient for multiple luminaires connected in parallel with large terminal for screw-free wiring

— Comply with Zhaga Book13, 24

— Surge level: PUSH: 1kV, L-N: 2kV

Typical applications

— For spot light and panel light

— For office, commercial and residential lighting

Product parameters

— Output current 150-500mA

— Output power 4.5-21W

— Input voltage 198–264Vac

— Output voltage 9-42Vdc

— Efficiency 88%

sales@prom-elec.com / ООО ПРОМЭЛЕКТРОНИКА

Electrical data

Input data

Rated supply voltage	220 ... 240 V
AC voltage range	198 ... 264 V
Mains frequency	0/50/60 Hz
Input voltage DC	180 ... 264V
Power factor	0.95
Efficiency in max. power	88%
Output current tolerance	±1%[1)]
Input current	0.15A Max
Inrush current	35A[2)]
Loading no. on circuit breaker 10 A (B)	29
Loading no. on circuit breaker 10 A (C)	32
Loading no. on circuit breaker 16 A (B)	47
Loading no. on circuit breaker 16 A (C)	52
Protective conductor current	≤0.7mA
Power input on stand-by	<0.5W

Output data

Nominal output voltage	9 ... 42V
Nominal output current	150 ... 500mA
Default output current	500mA
Current set	NFC/programmer
Maximum output power	21W
Nominal output power	4.5 ... 21W
Output ripple current (100 Hz)	±3.3 %
Flicker	Complies with IEEE Std 1789-2015
CIE SVM	≤0.4
IEC-Pst	≤1
Temperature tolerance	±10%
Starting time	<1.5S
THD	<10%

Safety

Withstanding voltage	I/P-O/P: 3.75kV&5mA&60S; I/P-DA1/DA2, O/P-DA1/DA2: 1.5kV&5mA&60S
Surge capability (L-N)	2 kV
PUSH[2)]	1 kV
Insulation resistance	I/P-O/P, I/P-DA1/DA2, O/P-DA1/DA2: >100MΩ@500VDC
Guarantee	5 years[4)]

1) Output current tolerance is ±3% when the current is ≤500mA.

2) t = 200 μs

3) The surge test wiring at the PUSH terminal is connected in parallel with L-N

4) 5 years @Tc≤84℃

Characteristic diagram

Operating Window

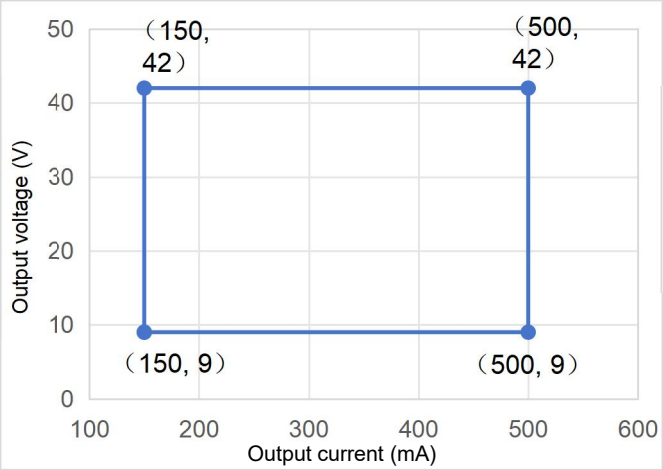

Typical Efficiency vs Load

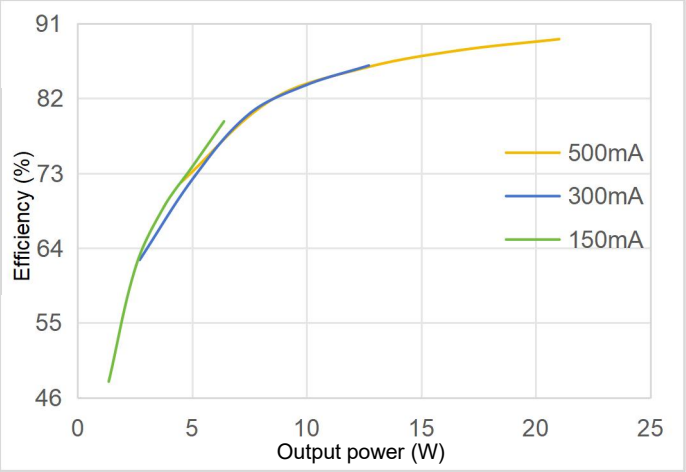

Typical Power Factor vs Load

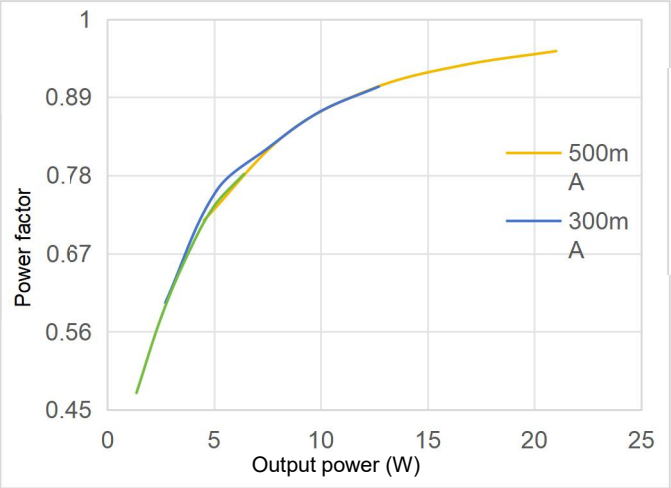

Typical THD vs Load

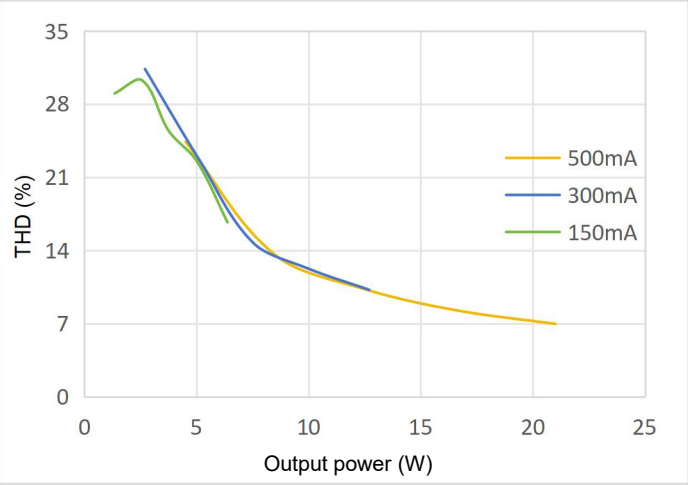

Lifespan

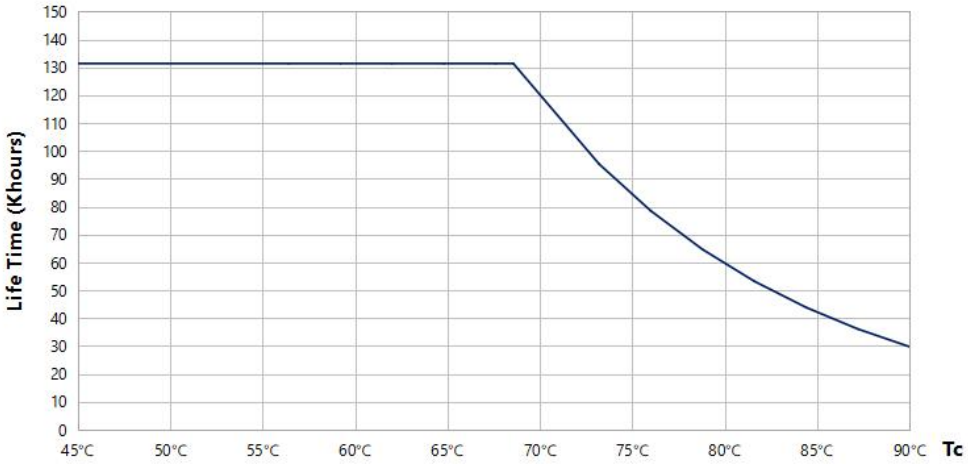

Dimensions

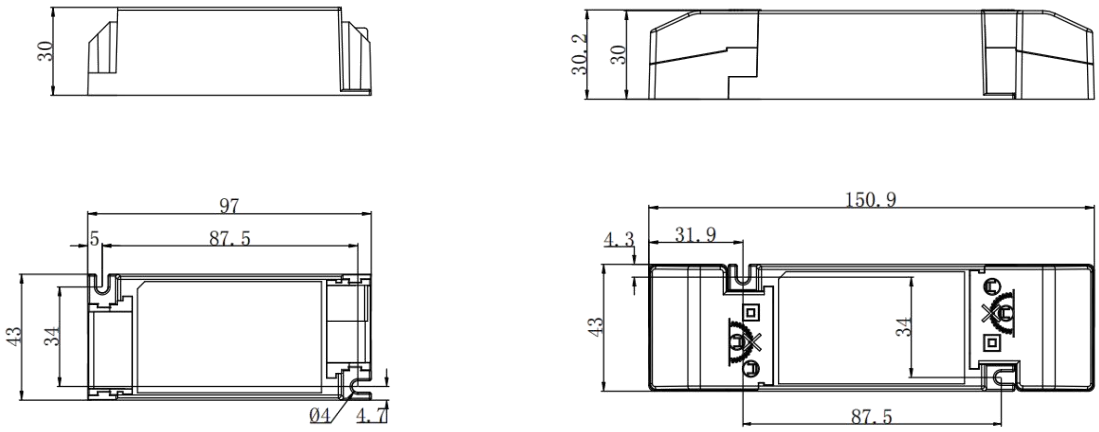

Built-in

Independent

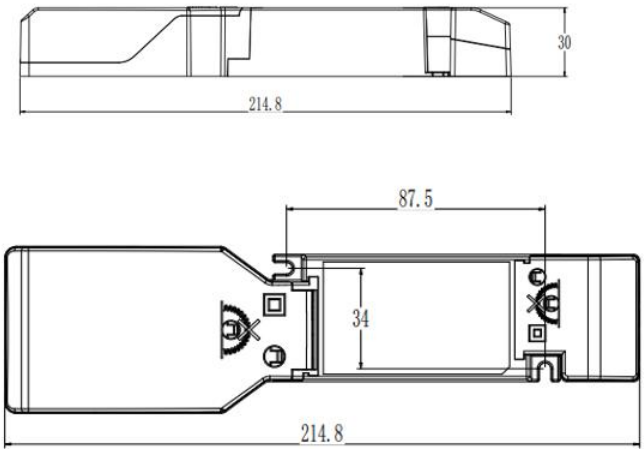

Independent

Mounting hole spacing, length	87.5mm
Product weight	130g
Cable cross-section, input side	0.5 ... 1.5 mm²
Cable cross-section, output side	0.5 ... 1.5 mm²
Wire preparation length, input side	7 ... 8mm
Wire preparation length, output side	7 ... 8mm
Length	97.0mm
Width	43.0mm
Height	30.0mm

Colors & materials

Casing material	PC
Casing color	White

Temperature & operating conditions

Ambient temperature range	-30℃ - +50℃
Maximum temperature at tc test point	90℃
Temperature range at storage	-30℃ - +80℃ (6 months in Class I environment)
Humidity range at storage	20-75%RH(no condensation)
Humidity during operation	20-95%RH(no condensation)
Atmospheric Pressure	86-106KPa
RoHS	RoHS 2.0（EU）2015/863

Tc test point

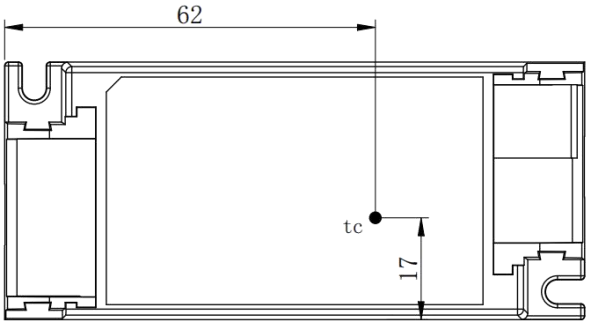

Tc point is at the bottom of LED driver

Product Terminal

Input		Output	
DA1 PUSH	DALI/PUSH dimming input	**LED+**	Positive electrode output of LED driver
DA2 PUSH	DALI/PUSH dimming input	**LED-**	Negative electrode output of LED driver
AC-L	AC live wire input		
AC-N	AC neutral wire input		

Protective Characteristics Schematic

Schematic diagram of input undervoltage protection

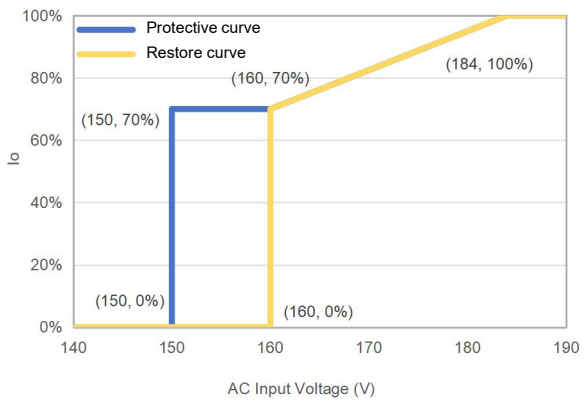

Schematic diagram of input overvoltage protection

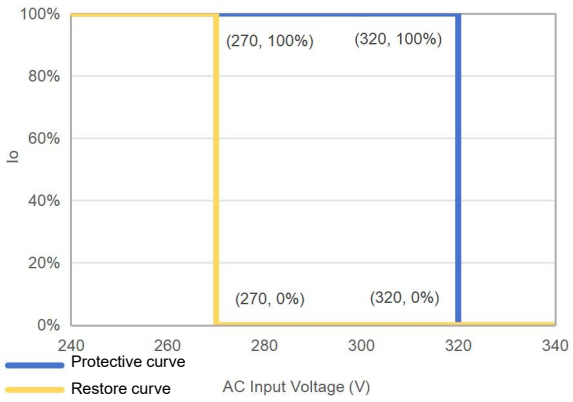

Capabilities

Dimmable	DALI/PUSH dimmable
Dimming range	1 ... 100%
Overheating protection	Yes
Overload protection	Yes
Short-circuit protection	Hiccup mode (Automatic reversible)
No-load protection	<59V
Suitable for fixtures with prot. class	I / II
Programming interface	DALI / NFC
Control interface	DALI
Number of channels	1 channel
CorridorDIM	Yes
EL	Yes
CLO	Yes
DALI Part 251 252 253	Yes

Dimming Function Instruction

- **DALI dimming function**

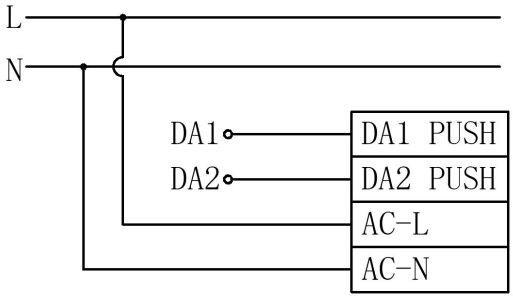

Wiring diagram of DALI dimming

① Default setting brightness is 100%.

② Connect DALI signal to DA1 PUSH and DA2 PUSH.

③ DALI protocol includes Max.16 scene groups.

④ Maximum number of LED drivers connected in parallel in DALI dimming mode: 64 pcs.

⑤ Dimming depth of DALI dimming: 1%.

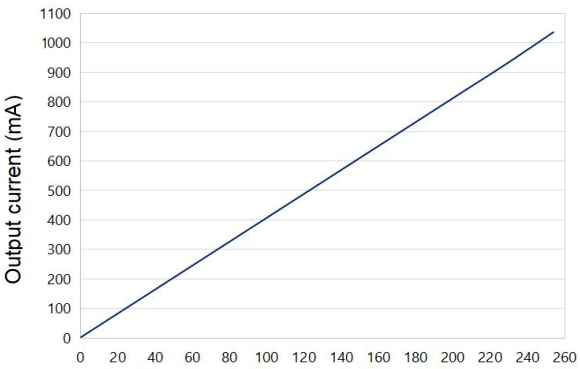

Linear dimming

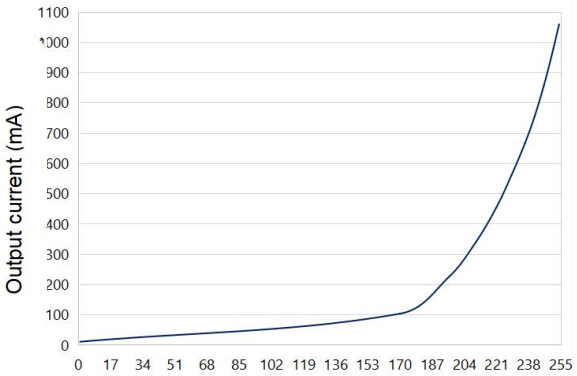

Logarithmic dimming

Note: Choose only ONE as opposed to use DALI or PUSH at the same time in case of the damage of DALI dimmer.

- **PUSH dimming function**

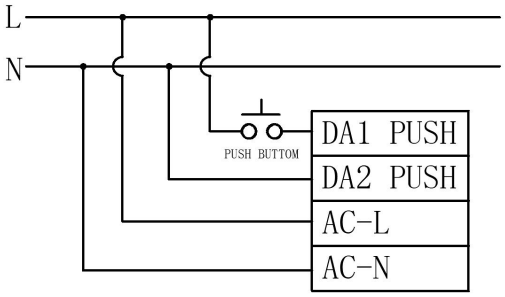

Wiring diagram of PUSH dimming

Switch from DALI mode to PUSH mode: short press PUSH switch to enable PUSH dimming function

① Connect PUSH switch between AC-L and DA1 PUSH in series and connect DA2 PUSH to AC-N.

② Make sure that AC-L and AC-N are NOT directly connected to DA1 PUSH and DA2 PUSH terminals.

③ Make sure that PUSH switch is off before the AC is powered on; operate PUSH after the AC is powered on.

④ Make sure the PUSH switch is off before disconnecting the AC.

⑤ If you have any questions about the wiring and operation, please confirm with Lifud FAE.

⑥ Wrong wiring or operation may cause damage to the driver.

Operation	Duration	Function
Instant Push	0.1-0.5S	LED light on/off
Long Push	0.6-9S	LED light dim up/down
Reset Push	＞9S	Reset the brightness of luminaire to 50%

① The PUSH operation won't cause any variations on LED driver if it's less than 0.1S.

② Minimum dimming depth of PUSH dimming: 1%

③ The PUSH dimming mode has the memory function in case of any power failure. When the LED driver is powered on again, the light will return to the previous state before power failure.

④ The present dimming direction of PUSH dimming is opposite to the former one.

⑤ In automatic mode, long press for more than 3 minutes to enter the corridor dimming function.

- **Corridor dimming function**

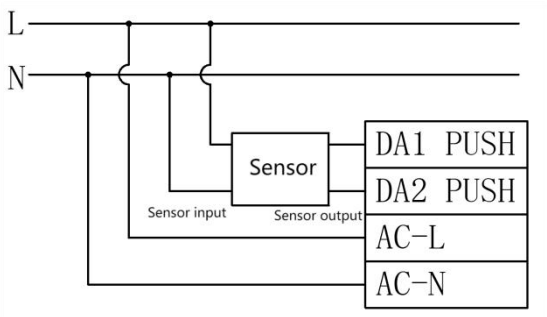

Wiring diagram of corridor dimming

Operations for Entering Corridor Lighting Mode

Approach 1: use Lifud programmer to enable the driver's corridor lighting mode and set parameters.

Approach 2: keep pressing PUSH for 3+ mins so as to switch to the corridor lighting mode.

Approach 3: keep moving in the effective sensing area for 3+ mins (set the sensor's hold time for 3+ mins to enable the corridor lighting mode.

Remarks:

1. In the automatic detection mode, the driver can be switched from PUSH mode to corridor lighting mode by approach 2 and 3, its brightness will dim up to 50%; long press for 3 mins and then it dims down and then dims up, which means the driver has entered the corridor lighting mode.

2. After activating the corridor dimming mode, PUSH DIM is turned off.

3. In the case of AC input and any level of brightness in the corridor lighting mode, switching DC and then return AC will restart the corridor lighting mode.

Operations for Existing Corridor Lighting Mode

Approach 1: use Lifud programmer to choose other modes and exit corridor lighting mode.

Approach 2: connect to DALI master and send DALI command, the driver will return to the DALI dimming mode.

Approach 3: connect to the PUSH switch and continuously press it 10 times within 10 secs, the driver will return to the PUSH dimming mode.

Remark:

1. The 3-sec or above single press or release will cause the press number (10 times) to be counted as 0.

2. The approach 2 and 3 CANNOT be used if the corridor lighting mode of driver is set via Lifud programmer.

Working Process of Corridor Dimming Mode

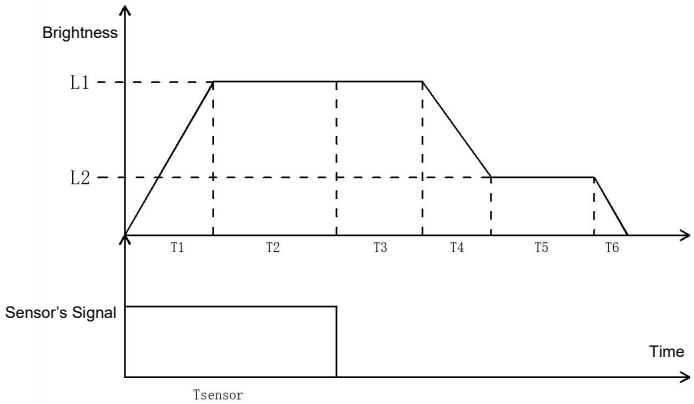

Symbol	Name	Default value	Available scope setting
T1	Fade-in time of sensing	1s	0-100s
T2	Holding time of sensing	Depends on sensor	Depends on sensor
T3	Waiting time of sensing	180s	0-59999s, 60000s (infinite)
T4	Fade-out time of sensing	5s	0-100s
T5	Unattended time	60000s (infinite)	0-59999s, 60000s (infinite)
T6	Fade-out off time	0s	0-100s
L1	Sensing brightness	100%	0-100%
L2	Unattended brightness	10%	0-100%

Emergency function instruction

The default output current is 15% Io max in the case of DC emergency input.

Emergency input voltage: 180-264Vdc

Note:

1. Emergency function can be set by Lifud programmer and programming software(or FEIG NFC reader)

2. It can be set from 0 to 100%.

3. If the emergency mode is on,input current is DC and output current is preset current; if the mode is off, input current is DC and the working mode is the same as the AC input.

4. In the case of mains input, the brightness is random when using PUSH dimming. When the driver enters the emergency escape lighting system and then reconnects AC, the light brightness will remain the one set via PUSH switch.

5. In the case of mains input, the brightness is random when using DALI dimming. When the driver enters the emergency escape lighting system and then reconnects AC, the light brightness will return to the brightness when DALI is powered on.

Programmer tools and software

Product	Name	Brand	Model	Software
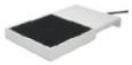	NFC programmer	FEIG	ID CPR30+	LF-NFCReader
	NFC handy programmer	FEIG	ID ISC.PRH101-USB	LF-NFCReader
	NFC group control programmer	FEIG	ID ISC.LRM1002-E ID ISC.ANT300/300-A	LF-NFCToMP
	Lifud programmer	LIFUD	LF-SCS080A	LF-PRG

Read/write and parameter configuration

Programming project	Default settings	Parameters settings	Read/Write
Production information	-	No	Read
Output current	500mA (default)	Yes	Read/Write
Operating mode	Automatic detection (DALI/PUSH)	Yes	Read/Write
EL	15% (default)	Yes	Read/Write
CorridorDIM	Inactivated	Yes	Read/Write
CLO	Inactivated	Yes	Read/Write
DALI Part 251	Activated	Yes	Read/Write
DALI Part 252	Activated	Can only be reset	Read/Write
DALI Part 253	Activated	Can only be reset	Read/Write

NFC function instructions

①NFC

PC Software NFC Reader LED Driver

Note: 1. When using an NFC reader, the driver is not allowed to operate while powered on. The driver must be powered off and completely discharged before it can read and write normally.

②Programmer setting box

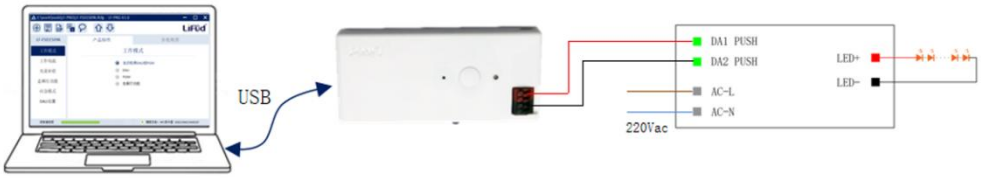

PC Software Lifud Programmer LED Driver

Note: When using the programmer, the driver must be powered on with AC for normal reading and writing.

Certificates & standards

Approval marks – approval	CCC, ENEC, UKCA, CE, CB, EL, RCM, DALI-2
Standards	GB 19510.1-2009; GB 19510.14-2009; GB 7000.1-2015; GB 17625.1-2022; GB/T 17743-2021 EN 61347-2-13; EN 61347-1; EN 62384; EN 62493; EN 55015; EN 61547; EN 61000-3-2; EN 61000-3-3; IEC61347-1; IEC61347-2-13; EN IEC 61347-2-13 Annex J; AS 61347.2.13 & AS/NZS 61347.1
Type of protection	IP20

Logistical Data

Product	Packaging unit (Pieces/Unit)	Dimensions (L*W*H)	Volume	Gross weight
LF-BDD020-0500-42	36	310 mm*285 mm*155 mm	13.69 dm³	4.862kg±5%

Test equipment & condition

Test Equipment	AC power source: CHROMA6530, digital power meter: CHROMA66202, oscilloscope: Tektronix DPO3014, DC electronic load: M9712B, LED board, constant temperature and humidity chamber, lightning surge generator: Everfine EMS61000-5B, rapid group pulse generator: Everfine EMS61000-4A, spectroanalyzer: KH3935, hi-pot tester: EEC SE7440, flicker tester (flicker-free coefficient test): Everfine LFA-3000, etc.

If there are no special remarks, the above parameters are tested at the ambient temperature of 25℃, humidity of 50%, full load and input voltage of 230Vac/50Hz.

Additional information

1. It is recommended that user install the over voltage protection, under voltage protection and surge protection devices in the power supply circuits of light fixtures to ensure electricity safety.
2. The LED driver used in combination with the end device is one of the accessories of the whole light fixture, and the EMC of the whole light fixture is not only susceptible to the driver itself, but to the LED light fixture and the whole light fixture's wiring. Thus, the manufacturer of LED light fixture should re-confirm the EMC of the whole light fixture before the whole light fixture is finished.
3. The test conditions of the circuit breaker configuration quantity are the same as those of the inrush current.
4. The PC cover, casing and end cap for assembling the LED driver in the light fixture must meet the fire rating of UL94-V0 or above.
5. Please disconnect AC input when DIP to different current; and then connect to AC input when DIP is done.
6. DC input is only for emergency.
7. Lifud Tecnology Co., Ltd. reserves the right to interpret any contents of this specification.

Transportation & storage

Suitable transportation means: vehicles, boats and aeroplanes.

In transit, it is necessary to prepare awnings for rain or sun protection. Moreover, please keep civilized loading and unloading to prevent the vibration or impact of LED driver as much as possible.

The storage of LED driver shall conform to the standard of Class I environment. When using LED drivers which have been stored for more than 6 months, please re-test them firstly. Do not use them unless they are tested to be qualified.

Cautions

Please use Lifud LED driver according to its parameters in the specification, otherwise the LED driver may malfunction.

Using any incompatible light fixtures or those that have not been certified may cause fire, explosion or other risks.

Man-made damage is beyond the scope of Lifud warranty service.

Disclaimer

Subject to change without notice. Errors and omission excepted. Always make sure to use the most recent release.