LDS3985

Very low drop and low noise BiCMOS 300 mA voltage regulator

Datasheet - production data

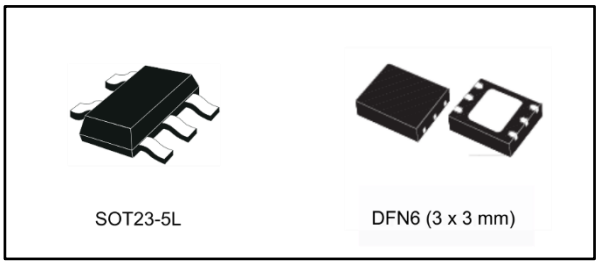

Features

- Input voltage from 2.5 V to 6 V
- Stable with low ESR ceramic capacitors
- Very low dropout voltage (150 mV typ. at 300 mA load, 0.4 mV typ. at 1 mA load)
- Very low quiescent current (85 µA typ. at no load, 200 µA typ. at 300 mA load; max. 1.5 µA in OFF mode)
- Guaranteed output current up to 300 mA
- Wide range of output voltages available on request: fixed from 1.25 V to 5 V with 100 mV step
- Fast turn-on time: typ. 240 µs
  - [C_O = 2.2 µF, C_{BYP} = 33 nF and I_O = 1 mA]
- Logic-controlled electronic shutdown
- Internal current and thermal limit
- Low output voltage noise: 30 µ V_{RMS} over 10 Hz to 100 kHz
- SVR of 55 dB at 1 kHz, 50 dB at 10 kHz
- Temperature range: - 40 °C to 125 °C
- Automotive grade product available in DFN6 package, temperature range: - 40 °C to 85 °C

Description

The LDS3985 provides up to 300 mA, from 2.5 V to 6 V input voltage. It is stable with ceramic and high quality tantalum capacitor. The ultra low drop voltage, low quiescent current and low noise make it suitable for low power applications and battery-powered systems. Shutdown logic control function is available, this means that when the device is used as local regulator, it is possible to put a part of the board in standby, decreasing the total power consumption. Typical applications are mobile phones and similar battery-powered wireless systems, portable information appliances.

Table 1: Device summary

Packages			Output voltage (V)
SOT23-5L	**DFN6 (3 x 3 mm)**	**DFN6 (3 x 3 mm) automotive-grade**	
LDS3985M15R	LDS3985PU15R		1.5
LDS3985M18R		LDS3985PU18RY (1)	1.8
LDS3985M25R			2.5
LDS3985M28R	LDS3985PU28R		2.8
LDS3985M30R			3.0
LDS3985M33R	LDS3985PU33R	LDS3985PU33RY(1)	3.3
LDS3985M50R			5.0

Notes:

(1)Qualified and characterized according to AEC Q100 and Q003 or equivalent, advanced screening according to AEC Q001 and Q002 or equivalent.

This is information on a product in full production. www.st.com

sales@prom-elec.com / ООО ПРОМЭЛЕКТРОНИКА

Contents

1 Diagram 3
2 Pin configuration 4
3 Maximum ratings 5
4 Electrical characteristics 6
5 Typical performance characteristics 10
6 Package information 13
6.1 SOT23-5L package information 13
6.2 SOT23-5L packing information 15
6.3 DFN6 (3 x 3 mm) package information 16
6.4 DFN6 (3 x 3 mm) packing information 18
7 Revision history 20

1 Diagram

Figure 1: Schematic diagram

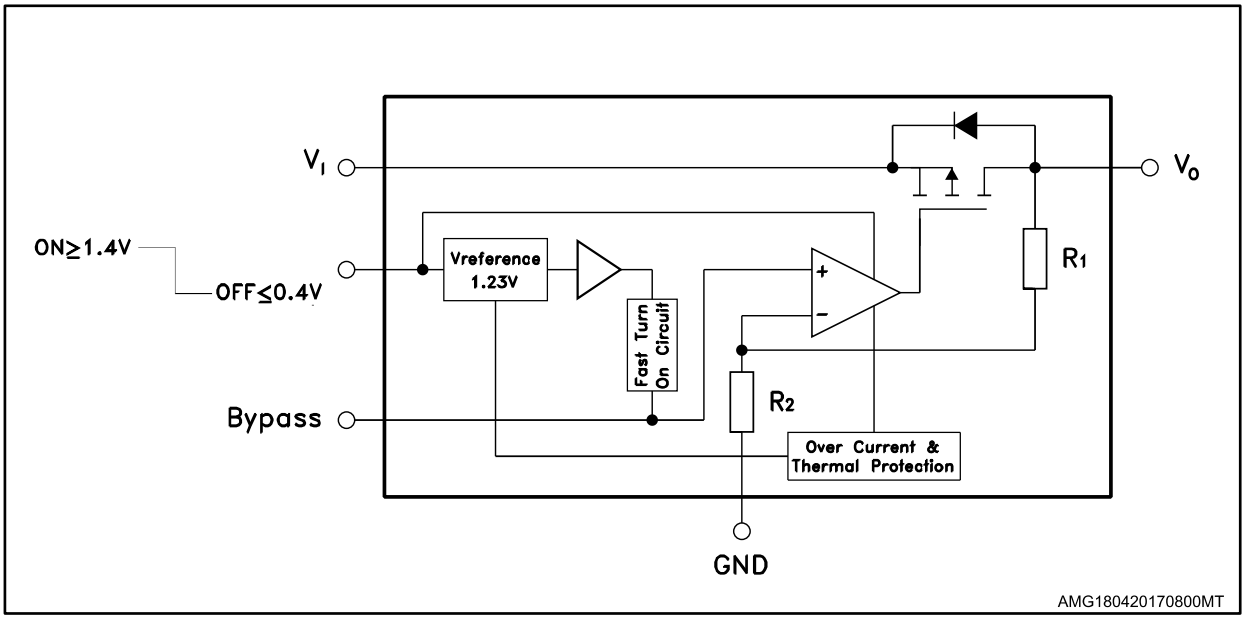

2 Pin configuration

Figure 2: Pin connections (top view for SOT23-5L, and for DFN6 (3 x 3 mm))

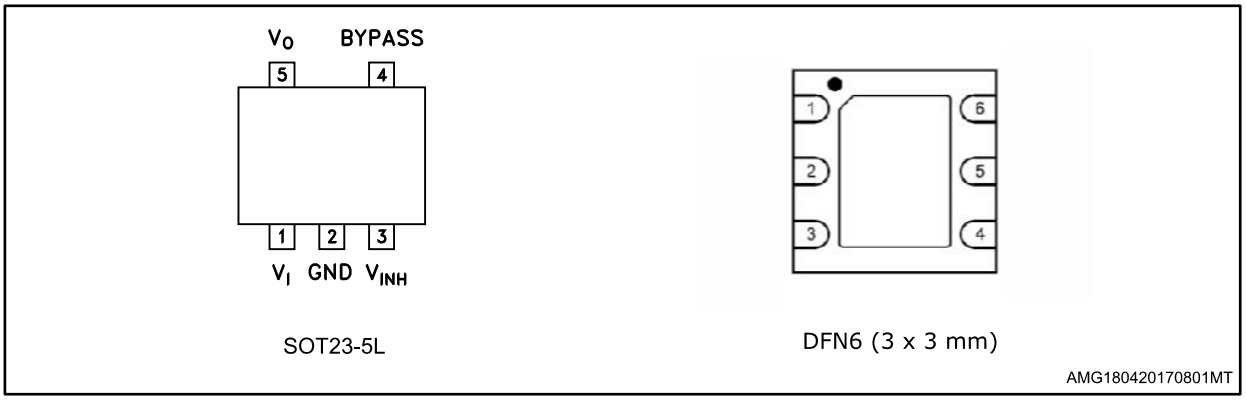

Table 2: Pin description

Pin for SOT23-5L	Pin for DFN6 (3 x 3 mm)	Symbol	Name and function
1	1	V_I	LDO input voltage
2	5	GND	Common ground
3	6	V_{INH}	Inhibit input voltage: ON mode when $V_{INH} \geq 1.2$ V, OFF mode when $V_{INH} \leq 0.4$ V (do not leave it floating; it is not internally pulled down/up)
4	4	Bypass	Bypass pin: an external capacitor to be connected (usually 10 nF) to minimize noise voltage
5	3	V_O	LDO output voltage
-	2	N.C.	Not connected

3 Maximum ratings

Table 3: Absolute maximum ratings

Symbol	Parameter	Value	Unit
V_I	DC input voltage	-0.3 to 6 [(1)]	V
V_O	DC output voltage	-0.3 to V_I + 0.3	V
V_{INH}	Inhibit input voltage	-0.3 to V_I + 0.3	V
I_O	Output current	Internally limited	
P_D	Power dissipation	Internally limited	
T_{STG}	Storage temperature range	-65 to 150	°C
T_{OP}	Operating junction temperature range	-40 to 125	°C
	Operating junction temperature range, automotive grade version	- 40 to 85	°C

Notes:

(1)The input pin is able to withstand non repetitive spike of 6.5 V for 200 ms.

Absolute maximum ratings are those values beyond which damage to the device may occur. Functional operation under these condition is not implied.

Table 4: Thermal data

Symbol	Parameter	SOT23-5L	DFN6 (3 x 3 mm)	Unit
R_{thJC}	Thermal resistance junction-case	81	10	°C/W
R_{thJA}	Thermal resistance junction-ambient	255	55	°C/W

4 Electrical characteristics

T_J = 25 °C, V_I = $V_{O(NOM)}$ + 0.5 V, C_I = 1 µF, C_O = 2.2 µF, C_{BYP} = 33 nF, I_O = 1 mA, V_{INH} = 1.4 V, unless otherwise specified.

Table 5: LDS3985 electrical characteristics

Symbol	Parameter	Test condition	Min.	Typ.	Max.	Unit
V_I	Operating input voltage		2.5		6	V
V_O	Output voltage < 2.5 V	I_O = 1 mA	-50		50	mV
		T_J = - 40 to 125 °C	-75		75	
V_O	Output voltage ≥ 2.5 V	I_O = 1 mA	-2		2	% $V_{O(NOM)}$
		T_J= - 40 to 125 °C	-3		3	
ΔV_O	Line regulation (1)	V_I = $V_{O(NOM)}$ + 0.5 to 6 V, T_J = - 40 to 125 °C	-0.1		0.1	%/V
		V_O = 4.7 to 5 V	-0.19		0.19	
ΔV_O	Load regulation	I_O = 1 mA to 300 mA, V_O ≤ 2.5 V T_J = - 40 to 125 °C		0.005	0.01	%/mA
ΔV_O	Load regulation	I_O = 1 mA to 300 mA, V_O ≥ 2.5 V T_J = - 40 to 125 °C		0.0008	0.004	%/mA
ΔV_O	Output AC line regulation (2)	V_I = $V_{O(NOM)}$ + 1 V, I_O = 300 mA, t_R = t_F = 30 µs		5		mV_{PP}
I_Q	Quiescent current ON mode: V_{INH} = 1.4 V	I_O = 0		85		µA
		I_O = 0, T_J = - 40 to 125 °C			150	
		I_O = 0 to 300 mA		200		
		I_O = 0 to 300 mA, T_J = - 40 to 125 °C			300	
	OFF mode: V_{INH} = 0.4 V			0.003		
		T_J = - 40 to 125 °C			1.5	
V_{DROP}	Dropout voltage (3)	I_O = 1 mA		0.4		mV
		I_O = 1 mA, T_J = - 40 to 125 °C			2	
		I_O = 150 mA		60		
		I_O = 150 mA, T_J = - 40 to 125 °C			100	
		I_O = 300 mA		150		
		I_O = 300 mA, T_J = - 40 to 125 °C			250	

Symbol	Parameter	Test condition		Min.	Typ.	Max.	Unit
I_{SC}	Short-circuit current	$R_L = 0$			600		mA
SVR	Supply voltage rejection	$V_I = V_{O(NOM)} + 0.25$ V ± $V_{RIPPLE} = 0.1$ V, $I_O = 50$ mA For $V_{O(NOM)} < 2.5$ V, $V_I = 2.55$ V	f = 1 kHz		55		dB
			f = 10 kHz		50		
$I_{O(PK)}$	Peak output current	$V_O \geq V_{O(NOM)} - 5\%$		300	550		mA
V_{INH}	Inhibit input logic low	$V_I = 2.5$ V to 6 V, $T_J = -40$ to 125 °C				0.4	V
	Inhibit input logic high			1.4			
I_{INH}	Inhibit input current	$V_{INH} = 0.4$ V, $V_I = 6$ V			±1		nA
eN	Output noise voltage	$B_W = 10$ Hz to 100 kHz, $C_O = 2.2$ µF			30		μV_{RMS}
t_{ON}	Turn-on time (4)	$C_{BYP} = 33$ nF			240		µs
T_{SHDN}	Thermal shutdown	(5)			160		°C
C_O	Output capacitor	Capacitance		2.2		22	µF
		ESR		5		5000	mΩ

Notes:

(1)For $V_{O(NOM)} < 2$ V, $V_I = 2.5$ V.

(2)For $V_{O(NOM)} = 1.25$ V, $V_I = 2.5$ V.

(3)Dropout voltage is the input-to-output voltage difference at which the output voltage is 100 mV below its nominal value. This specification does not apply to input voltages below 2.5 V.

(4)Turn-on time is time measured between the enable input just exceeding V_{INH} high value and the output voltage just reaching 95% of its nominal value.

(5)Typical thermal protection hysteresis is 20 °C.

Table 6: LDS3985 (automotive grade) electrical characteristics

Symbol	Parameter	Test condition		Min.	Typ.	Max.	Unit
V_I	Operating input voltage			2.5		6	V
V_O	Output voltage < 2.5 V	I_O = 1 mA		-50		50	mV
		T_J = - 40 to 85 °C		-75		75	
V_O	Output voltage ≥ 2.5 V	I_O = 1 mA		-2		2	% $V_{O(NO}$M)
		T_J= - 40 to 85 °C		-3		3	
ΔV_O	Line regulation (1)	$V_I = V_{O(NOM)}$ + 0.5 to 6 V, T_J = - 40 to 85 °C		-0.1		0.1	%/V
		V_O = 4.7 to 5 V		-0.19		0.19	
ΔV_O	Load regulation	I_O = 1 mA to 300 mA, V_O ≤ 2.5 V T_J = - 40 to 85 °C			0.005	0.01	%/mA
ΔV_O	Load regulation	I_O = 1 mA to 300 mA, V_O ≥ 2.5 V T_J = - 40 to 85 °C			0.0008	0.004	%/mA
ΔV_O	Output AC line regulation (2)	$V_I = V_{O(NOM)}$ + 1 V, I_O = 300 mA $t_R = t_F$ = 30 µs			5		mV_{PP}
I_Q	Quiescent current ON mode: V_{INH} = 1.4 V	I_O = 0			85		µA
		I_O = 0, T_J = - 40 to 85 °C				150	
		I_O = 0 to 300 mA			200		
		I_O = 0 to 300 mA, T_J = - 40 to 85 °C				300	
	OFF mode: V_{INH} = 0.4 V				0.003		
		T_J = - 40 to 85 °C				1.5	
V_{DROP}	Dropout voltage (3)	I_O = 1 mA			0.4		mV
		I_O = 1 mA, T_J = -40 to 85 °C				2	
		I_O = 150 mA			60		
		I_O = 150 mA, T_J = - 40 to 85 °C				100	
		I_O = 300 mA			150		
		I_O = 300 mA, T_J = - 40 to 85 °C				250	
I_{SC}	Short-circuit current	R_L = 0			600		mA
SVR	Supply voltage rejection	$V_I = V_{O(NOM)}$ + 0.25 V ± V_{RIPPLE} = 0.1 V, I_O = 50 mA For $V_{O(NOM)}$ < 2.5 V V_I = 2.55 V	f = 1 kHz		55		dB
			f = 10 kHz		50		

Symbol	Parameter	Test condition	Min.	Typ.	Max.	Unit
$I_{O(PK)}$	Peak output current	$V_O \geq V_{O(NOM)}$ - 5%	300	550		mA
V_{INH}	Inhibit input logic low	V_I = 2.5 V to 6 V, T_J = - 40 to 85 °C			0.4	V
	Inhibit input logic high		1.4			
I_{INH}	Inhibit input current	V_{INH} = 0.4 V, V_I = 6 V		±1		nA
eN	Output noise voltage	B_W = 10 Hz to 100 kHz, C_O = 2.2 µF		30		μV_{RMS}
t_{ON}	Turn-on time (4)	C_{BYP} = 33 nF		240		µs
T_{SHDN}	Thermal shutdown	(5)		160		°C
C_O	Output capacitor	Capacitance	2.2		22	µF
		ESR	5		5000	mΩ

Notes:

(1)For $V_{O(NOM)}$ < 2 V, V_I = 2.5 V.

(2)For $V_{O(NOM)}$ = 1.25 V, V_I = 2.5 V.

(3)Dropout voltage is the input-to-output voltage difference at which the output voltage is 100 mV below its nominal value. This specification does not apply to input voltages below 2.5 V.

(4)Turn-on time is time measured between the enable input just exceeding V_{INH} high value and the output voltage just reaching 95% of its nominal value.

(5)Typical thermal protection hysteresis is 20 °C.

5 Typical performance characteristics

T_J = 25 °C, V_I = $V_{O(NOM)}$ + 0.5 V, C_I = 1 µF, C_O = 2.2 µF, C_{BYP} = 33 nF, I_O = 1 mA, V_{INH} = 1.4 V, unless otherwise specified.

Figure 3: Output voltage vs temperature V_O = 1.35 V

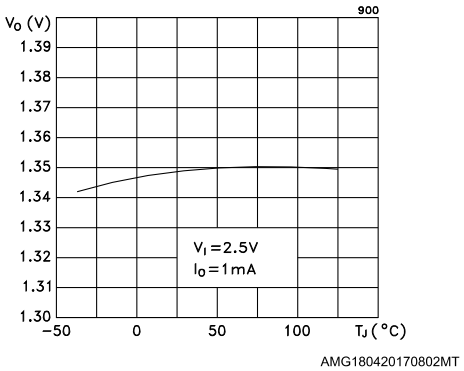

Figure 4: Output voltage vs temperature V_O = 2.8 V

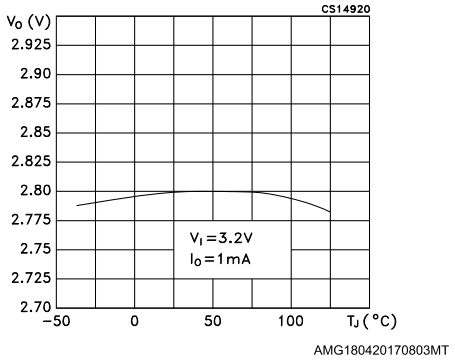

Figure 5: Output voltage vs temperature V_O = 3.3 V

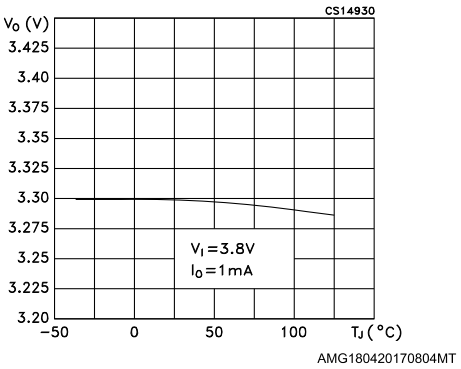

Figure 6: Inhibit voltage vs temperature V_O = 1.35 V

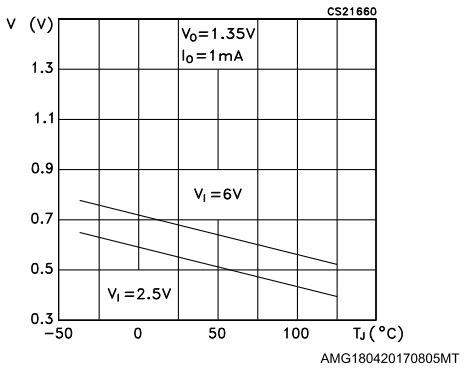

Figure 7: Inhibit voltage vs temperature (V_O = 3.3 V)

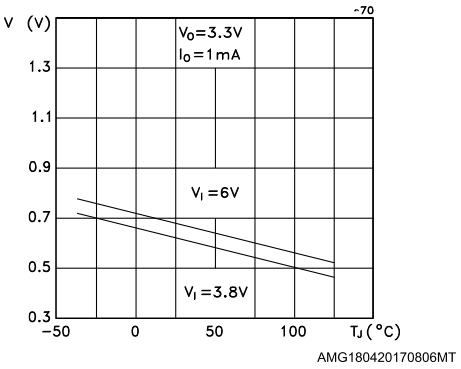

Figure 8: Line regulation vs temperature (V_I = 2.5 V to 6 V)

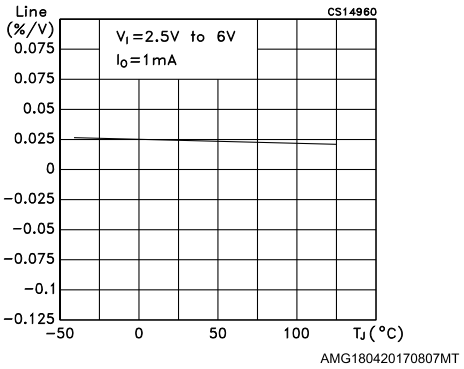

Figure 9: Line regulation vs temperature (V_I = 3.2 V to 6 V)

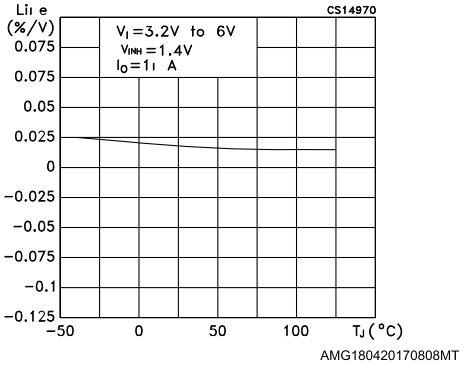

Figure 10: Line regulation vs temperature (V_I = 3.8 V to 6 V)

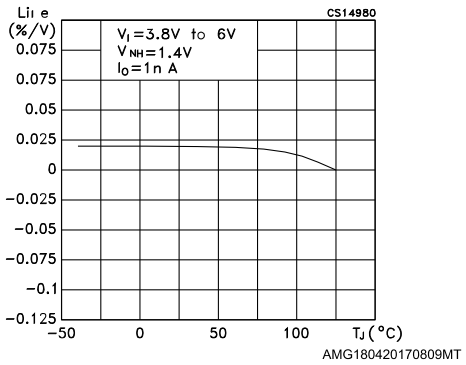

Figure 11: Quiescent current vs temperature (V_I = 2.5 V)

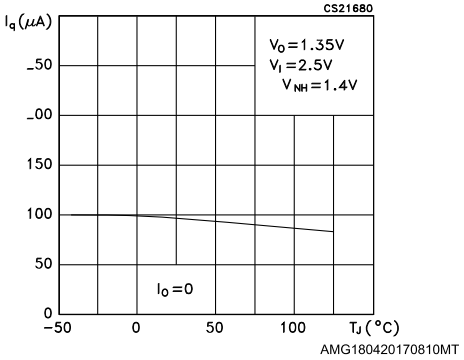

Figure 12: Quiescent current vs temperature (V_I = 6 V)

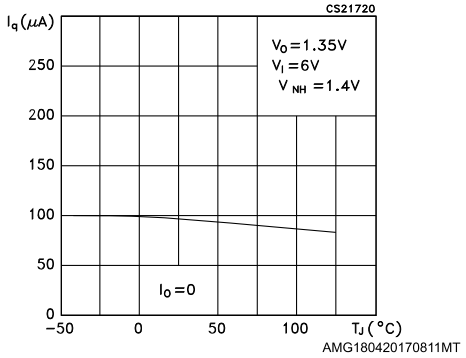

Figure 13: Quiescent current vs temperature (V_I = 3.4 V)

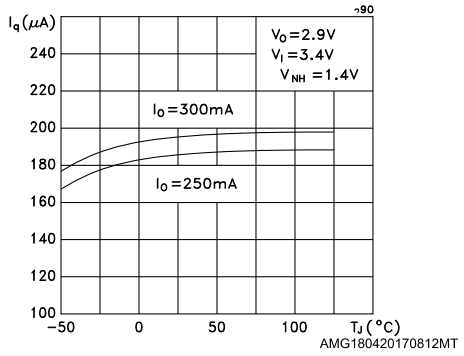

Figure 14: Supply voltage rejection vs frequency

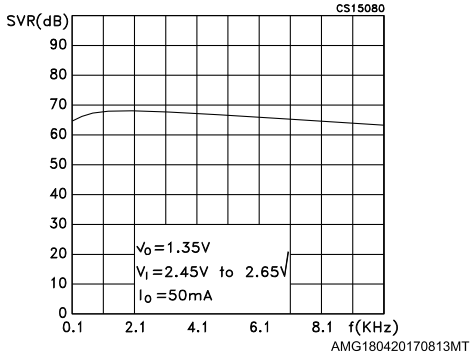

Figure 15: Dropout voltage vs temperature

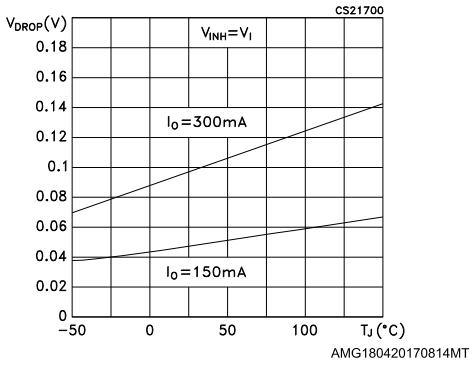

Figure 16: Dropout voltage vs output current

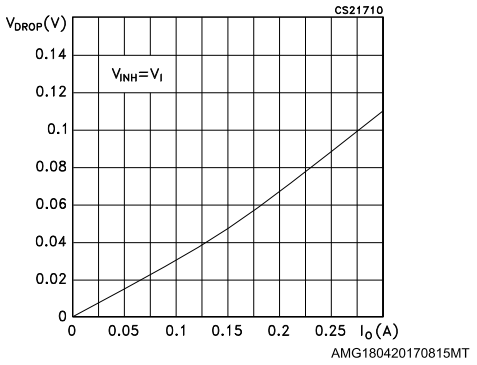

Figure 17: Inhibit transient

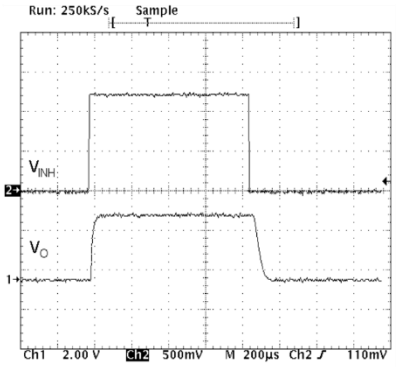

V_I = 5 V, I_O = 1 mA, V_{INH} = 0 to 1.2 V, C_I = C_O = 1 µF (cer), C_{BYP} = 10 nF, T_R = T_F = 1 µs

AMG180420170816MT

6 Package information

In order to meet environmental requirements, ST offers these devices in different grades of ECOPACK® packages, depending on their level of environmental compliance. ECOPACK® specifications, grade definitions and product status are available at: ***www.st.com***. ECOPACK® is an ST trademark.

6.1 SOT23-5L package information

Figure 18: SOT23-5L package outline

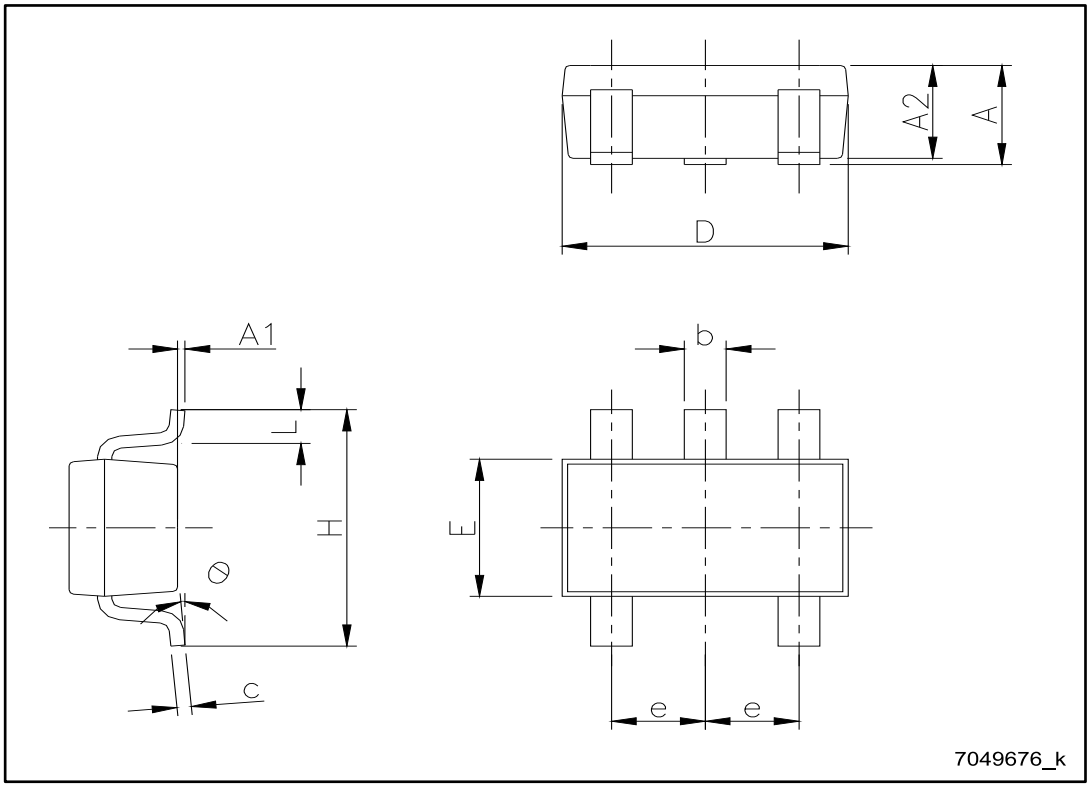

Table 7: SOT23-5L package mechanical data

Dim.	mm		
	Min.	Typ.	Max.
A	0.90		1.45
A1	0		0.15
A2	0.90		1.30
b	0.30		0.50
c	0.09		0.20
D		2.95	
E		1.60	
e		0.95	
H		2.80	
L	0.30		0.60
θ	0°		8°

Figure 19: SOT23-5L recommended footprint

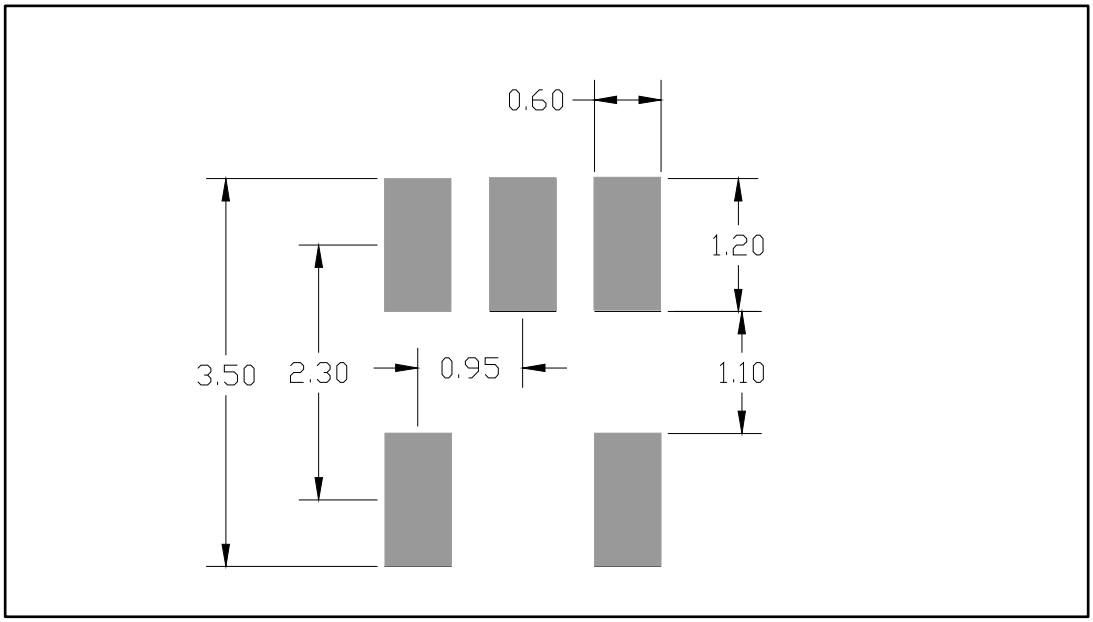

Dimensions are in mm

6.2 SOT23-5L packing information

Figure 20: SOT23-5L tape and reel outline

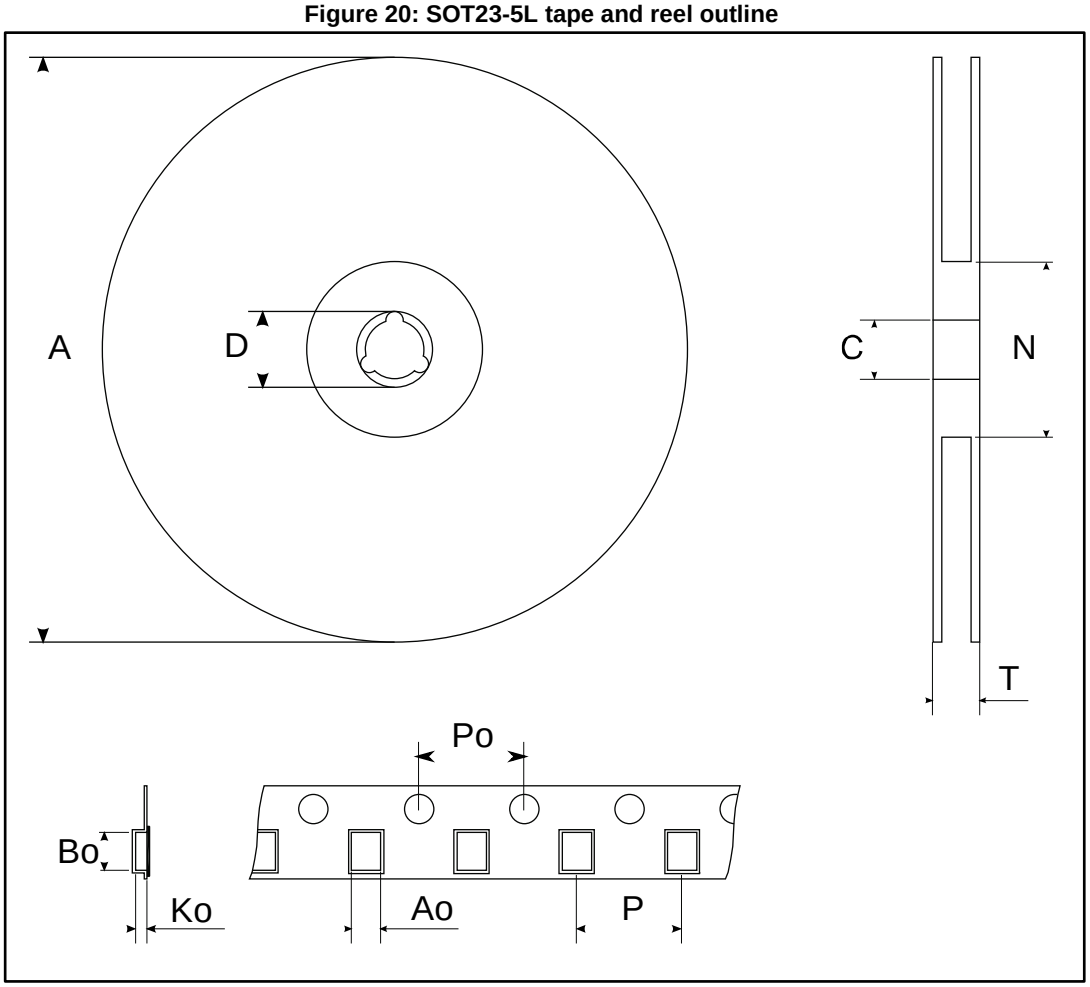

Table 8: SOT23-5L tape and reel mechanical data

Dim.	mm		
	Min.	Typ.	Max.
A			180
C	12.8	13.0	13.2
D	20.2		
N	60		
T			14.4
Ao	3.13	3.23	3.33
Bo	3.07	3.17	3.27
Ko	1.27	1.37	1.47
Po	3.9	4.0	4.1
P	3.9	4.0	4.1

6.3 DFN6 (3 x 3 mm) package information

Figure 21: DFN6 (3 x 3 mm) package outline

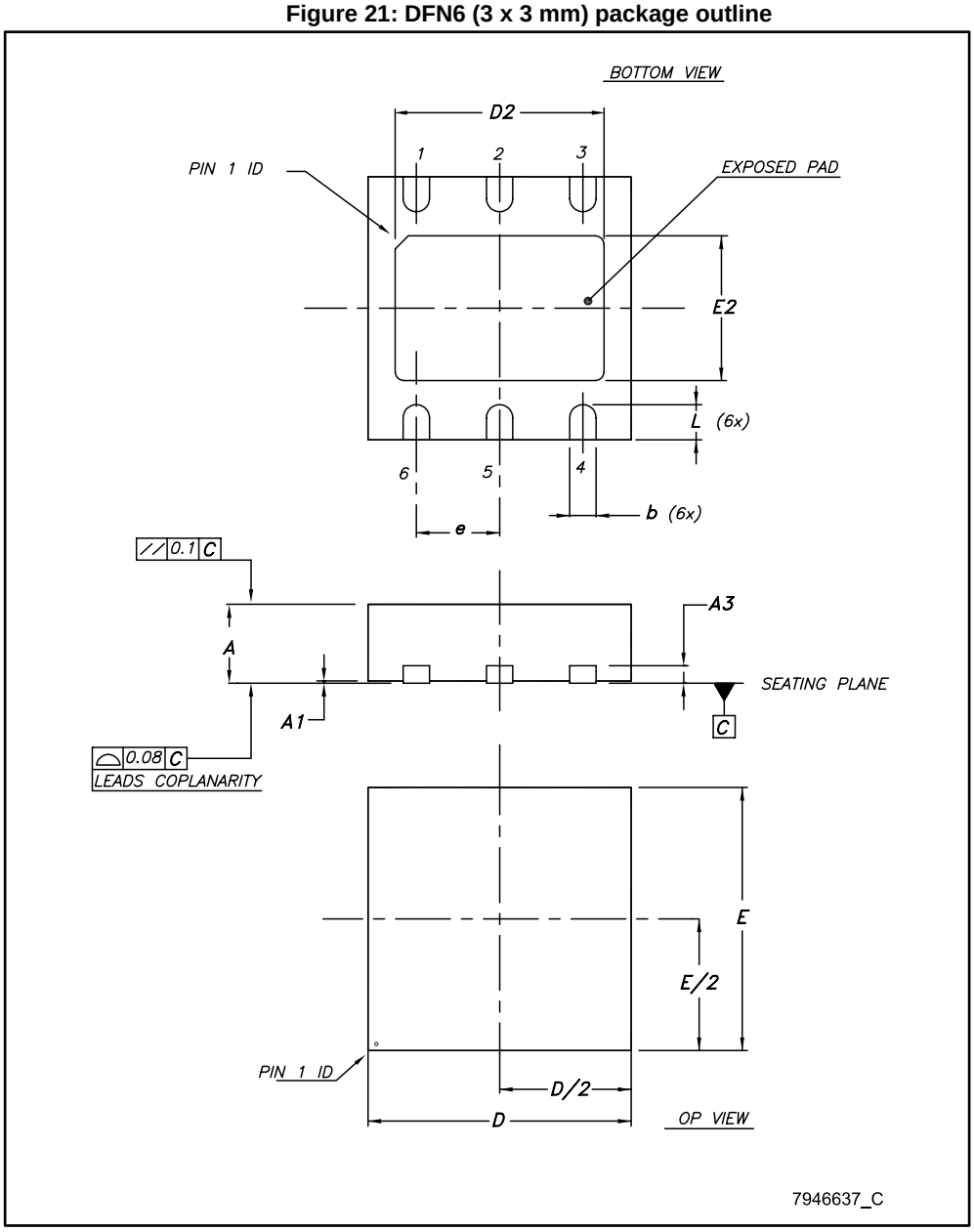

Table 9: DFN6 (3 x 3 mm) mechanical data

Dim.	mm		
	Min.	Typ.	Max.
A	0.80		1
A1	0	0.02	0.05
A3		0.20	
b	0.23		0.45
D	2.90	3	3.10
D2	2.23		2.50
E	2.90	3	3.10
E2	1.50		1.75
e		0.95	
L	0.30	0.40	0.50

Figure 22: DFN6 (3 x 3 mm) recommended footprint

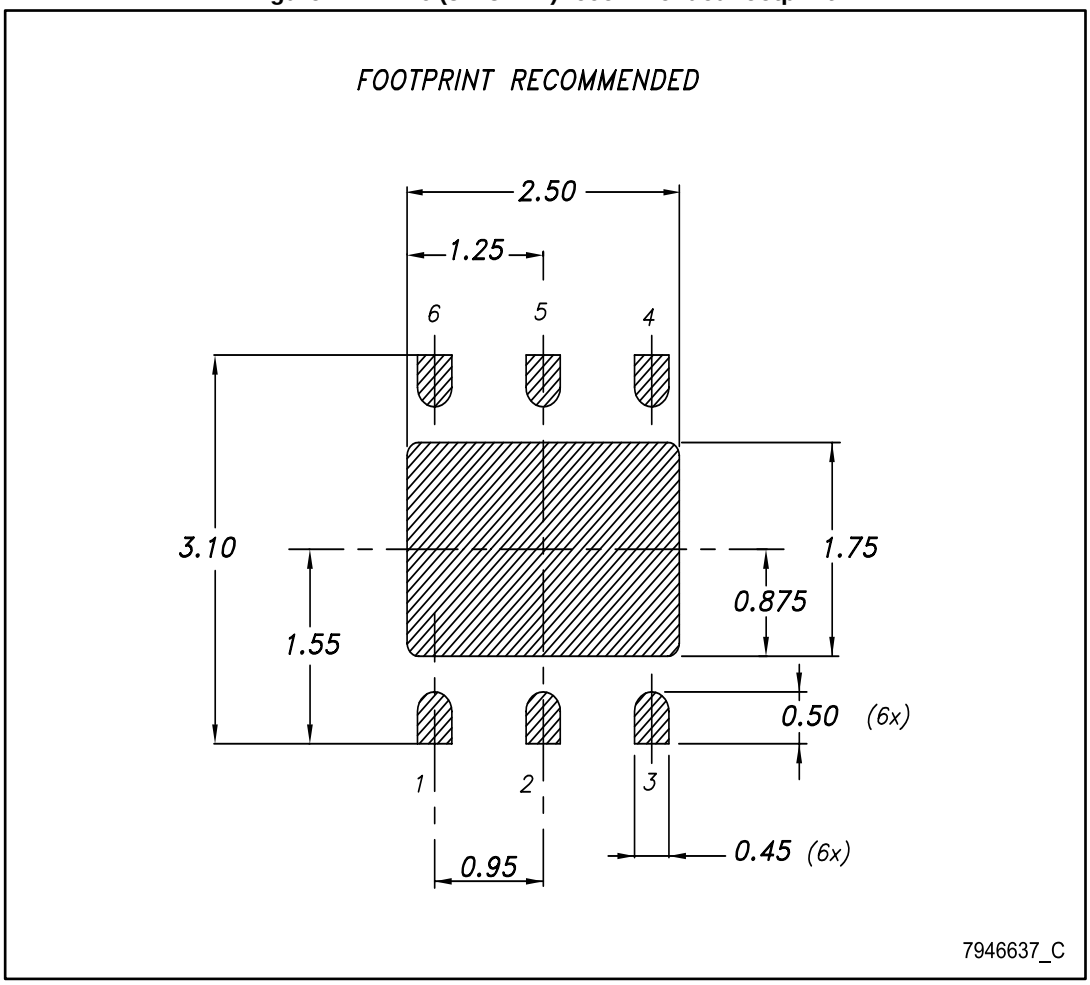

6.4 DFN6 (3 x 3 mm) packing information

Figure 23: DFN6 (3 x 3 mm) tape outline

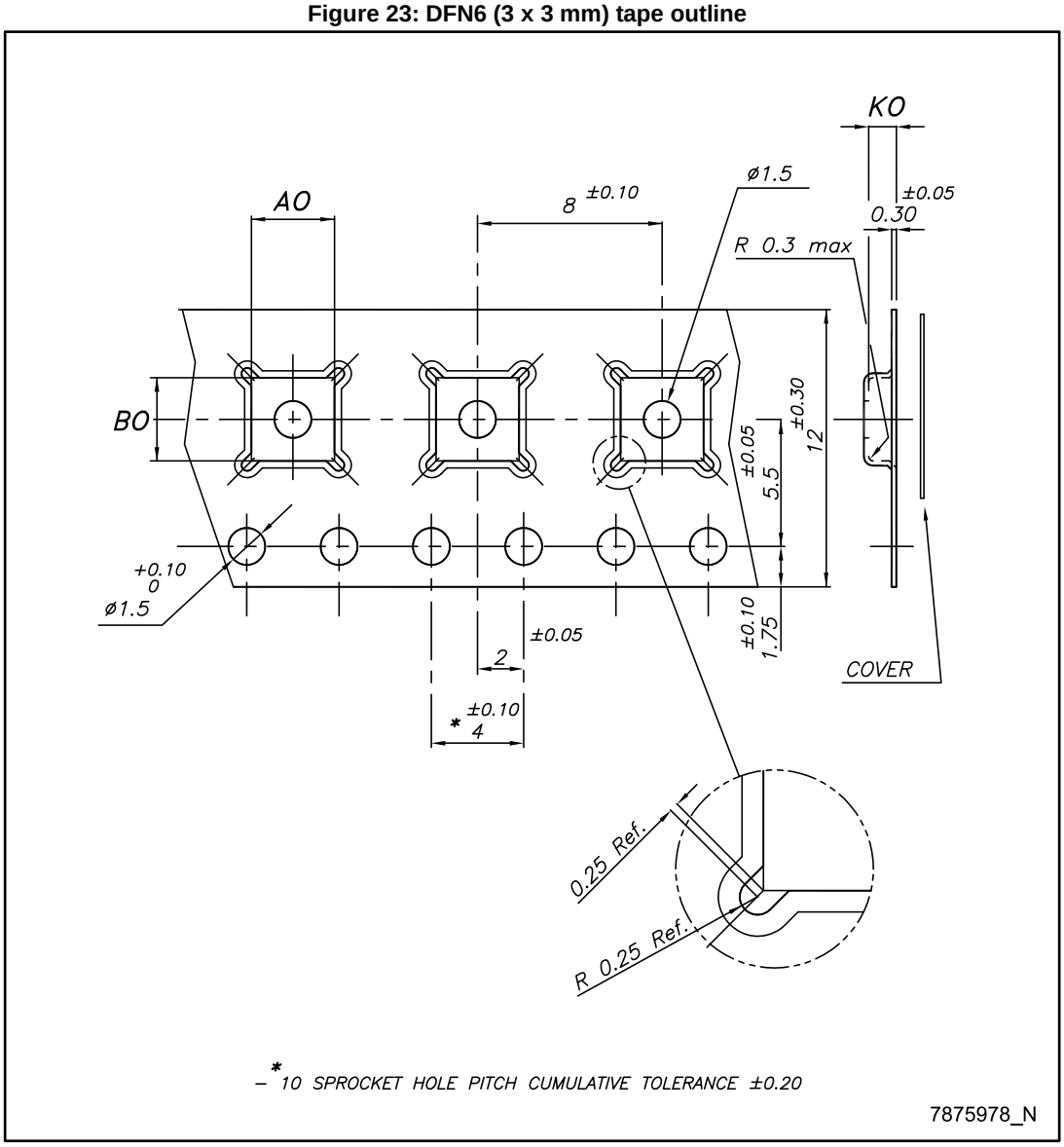

Figure 24: DFN6 (3 x 3 mm) reel outline

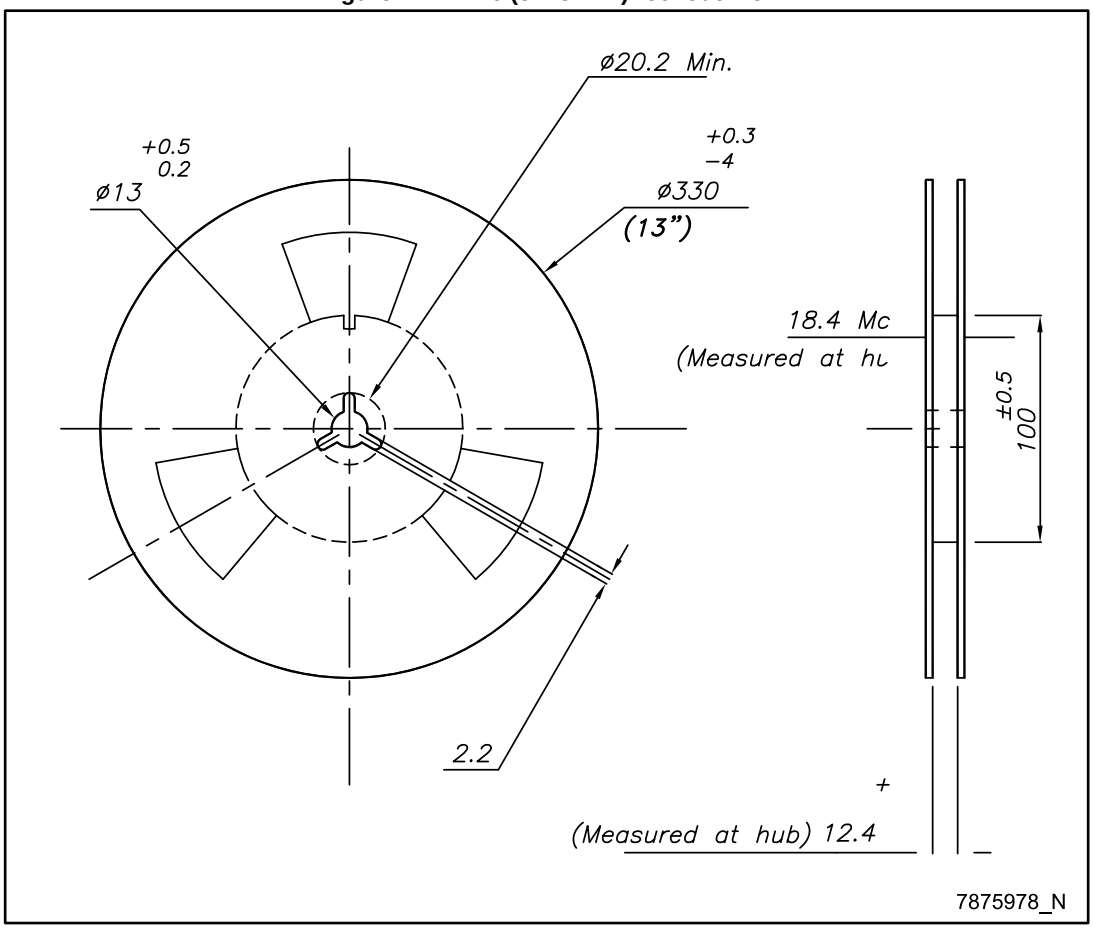

Table 10: DFN6 (3 x 3 mm) tape and reel mechanical data

Dim.	mm		
	Min.	Typ.	Max.
A0	3.20	3.30	3.40
B0	3.20	3.30	3.40
K0	1	1.10	1.20

7 Revision history

Table 11: Document revision history

Date	Revision	Changes
02-Dec-2004	1	First release.
10-Apr-2007	2	Added: new package TSOT23-5L.
16-May-2007	3	Added: new mechanical data DFN6D and order codes updated.
06-Sep-2007	4	Added: Table 1 in cover page.
11-Jun-2008	5	Modified: not found.
11-Jul-2009	6	Modified: not found.
29-Jul-2010	7	Modified: not found and not found.
24-Oct-2013	8	Modified the Title and the Features in cover page. Deleted Table1: Device summary. Updated not found and not found. Added and not found. Minor text changes.
28-Feb-2014	9	Modified the Title and the Features in cover page. Deleted Table1: Device summary. Updated Table 10: Order codes and Section 6: Package mechanical data. Added Table 6: LDS3985 (automotive grade) electrical characteristics and Section 7: Packaging mechanical data. Minor text changes.
03-May-2017	10	Updated *Table 1: "Device summary"*. Minor text changes.

IMPORTANT NOTICE – PLEASE READ CAREFULLY

STMicroelectronics NV and its subsidiaries ("ST") reserve the right to make changes, corrections, enhancements, modifications, and improvements to ST products and/or to this document at any time without notice. Purchasers should obtain the latest relevant information on ST products before placing orders. ST products are sold pursuant to ST's terms and conditions of sale in place at the time of order acknowledgement.

Purchasers are solely responsible for the choice, selection, and use of ST products and ST assumes no liability for application assistance or the design of Purchasers' products.

No license, express or implied, to any intellectual property right is granted by ST herein.

Resale of ST products with provisions different from the information set forth herein shall void any warranty granted by ST for such product.

ST and the ST logo are trademarks of ST. All other product or service names are the property of their respective owners.

Information in this document supersedes and replaces information previously supplied in any prior versions of this document.

© 2017 STMicroelectronics – All rights reserved