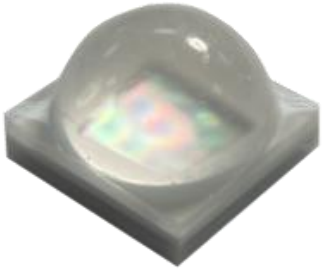

ProLight PB2H-4MDE-HWFC
4W Power LED
Technical Datasheet
Version: P1.2

ProLight Opto PB2H Series

Preliminary

Features

- Corrosion robustness
- SMD 3535 ceramic package
- Maximum drive current: 1200 mA
- Wide viewing angle: 120˚ (Lambertian optical lens)
- Radiometric flux: typ. 1500 mW @ 700mA ; typ. 781 mW @ 350mA
- Photosynthetic Photon Flux: typ. 5.57 µmol/s @ 700mA ; typ. 2.90 µmol/s @ 350mA
- Best JEDEC Moisture Sensitivity Level 1

Main Applications

- Horticultural Lighting
- Accent and effect lighting

Introduction

·Phenix 3535 qualifies as the JEDEC Level 1 MSL sensitivity level and suitable for SMD process, Pb_free reflow soldering capability, and full compliance with EU Reduction of Hazardous Substances (RoHS) legislation.

sales@prom-elec.com / ООО ПРОМЭЛЕКТРОНИКА

Emitter Mechanical Dimensions

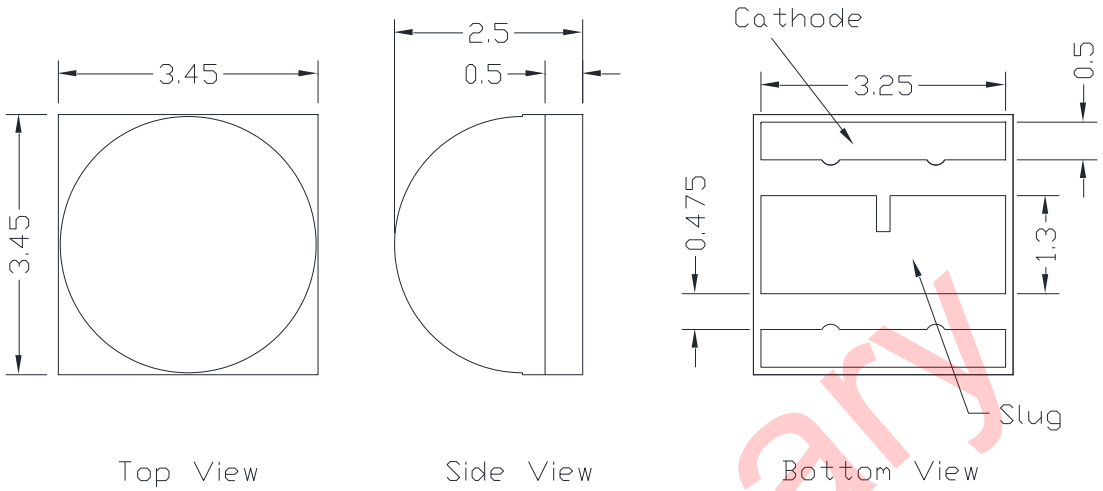

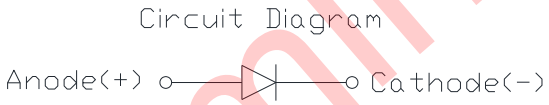

Preliminary

Notes:
1. Electrical insulation between the case and the board is required. Do not electrically connect either the anode or cathode to the slug.
2. Drawing not to scale.
3. All dimensions are in millimeters.
4. Unless otherwise indicated, tolerances are ± 0.1mm.
5. Please do not solder the emitter by manual hand soldering, otherwise it will damage the emitter.
6. **Please do not use a force of over 0.3kgf impact or pressure on the lens of the LED, otherwise it will cause a catastrophic failure.**

*The appearance and specifications of the product may be modified for improvement without notice.

Flux Characteristics, T_J = 25˚C

Part Number Emitter	Radiometric Power (mW) @700mA Min.	Radiometric Power (mW) @700mA Typ.	Radiometric Power (mW) Refer @350mA Typ.	Radiometric Power (mW) Refer @1000mA Typ.	PPF (µmol/s) @700mA Min.	PPF (µmol/s) @700mA Typ.	PPF (µmol/s) Refer @350mA Typ.	PPF (µmol/s) Refer @1000mA Typ.
PB2H-4MDE-HWFC	1400	1500	781	2075	5.19	5.57	2.90	7.70

- ProLight maintains a tolerance of ± 7% on flux and power measurements.
- Please do not drive at rated current more than 1 second without proper heat sink.

Electrical Characteristics, T_J = 25˚C

Color	Forward Voltage V_F (V) @700mA Min.	Forward Voltage V_F (V) @700mA Typ.	Forward Voltage V_F (V) @700mA Max.	Forward Voltage V_F (V) Refer @350mA Typ.	Forward Voltage V_F (V) Refer @1000mA Typ.	Electrical Thermal Resistance Junction to Slug with efficiency is 73% (℃/W)
Royal Blue	2.8	2.9	3.2	2.8	3.0	2.8

- ProLight maintains a tolerance of ± 0.1V for Voltage measurements.

Optical Characteristics at 700mA, T_J = 25˚C

Radiation Pattern	Color	Dominant Wavelength λ_D Min.	Dominant Wavelength λ_D Typ.	Dominant Wavelength λ_D Max.	Total included Angle (degrees) $\theta_{0.90V}$	Viewing Angle (degrees) $2\,\theta_{1/2}$
Lambertian	Royal Blue	448 nm	452 nm	458 nm	170	120

- ProLight maintains a tolerance of ± 1nm for dominant wavelength measurements.

Preliminary

Absolute Maximum Ratings

Parameter	Royal Blue
DC Forward Current (mA)	1200
Peak Pulsed Forward Current (mA)	1500 (less than 1/10 duty cycle@1KHz)
ESD Sensitivity (HBM per MIL-STD-883E Method 3015.7)	2KV
LED Junction Temperature	120˚C
Operating Board Temperature at Maximum DC Forward Current	-40˚C - 105˚C
Storage Temperature	-40˚C - 120˚C
Soldering Temperature	JEDEC 020c 260˚C
Allowable Reflow Cycles	3
Reverse Voltage	Not designed to be driven in reverse bias

Radiometric Power Bin Structure at 700mA

Color	Bin Code	Radiometric Power (mW) Min.	Radiometric Power (mW) Max.	PPF (μmol/s) Min.	PPF (μmol/s) Max.	PPF/W (μmol/J) Typ.	Available Color Bins
Royal Blue	G	1400	1450	5.19	5.38	2.60	All
	H	1450	1500	5.38	5.57	2.70	All
	J	1500	1550	5.57	5.75	-	【1】
	K	1550	1640	5.75	6.08	-	【1】

- ProLight maintains a tolerance of ± 7% on flux and power measurements.
- The flux bin of the product may be modified for improvement without notice.
- 【1】 The rest of color bins are not 100% ready for order currently. Please ask for quote and order possibility.

Preliminary

Dominant Wavelength Bin Structure at 700mA

Color	Bin Code	Minimum Dominant Wavelength (nm)	Maximum Dominant Wavelength (nm)
Royal Blue	5	448	453
	6	453	458

- ProLight maintains a tolerance of ± 1nm for dominant wavelength measurements.

Forward Voltage Bin Structure at 700mA

Color	Bin Code	Minimum Voltage (V)	Maximum Voltage (V)
Royal Blue	A	2.8	2.9
	B	2.9	3.0
	D	3.0	3.1
	E	3.1	3.2

- ProLight maintains a tolerance of ± 0.1V for Voltage measurements.

Preliminary

Color Spectrum, T_J = 25˚C

1. Royal Blue

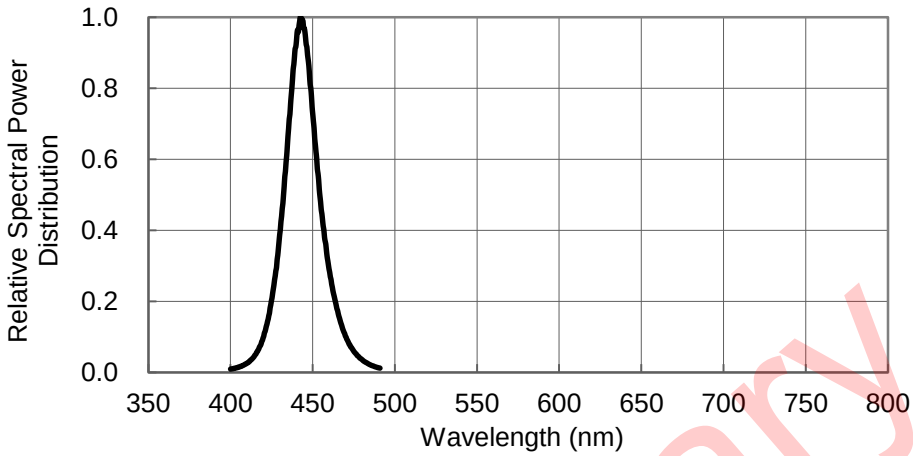

Light Output Characteristics

Relative Light Output vs. Junction Temperature at 700mA

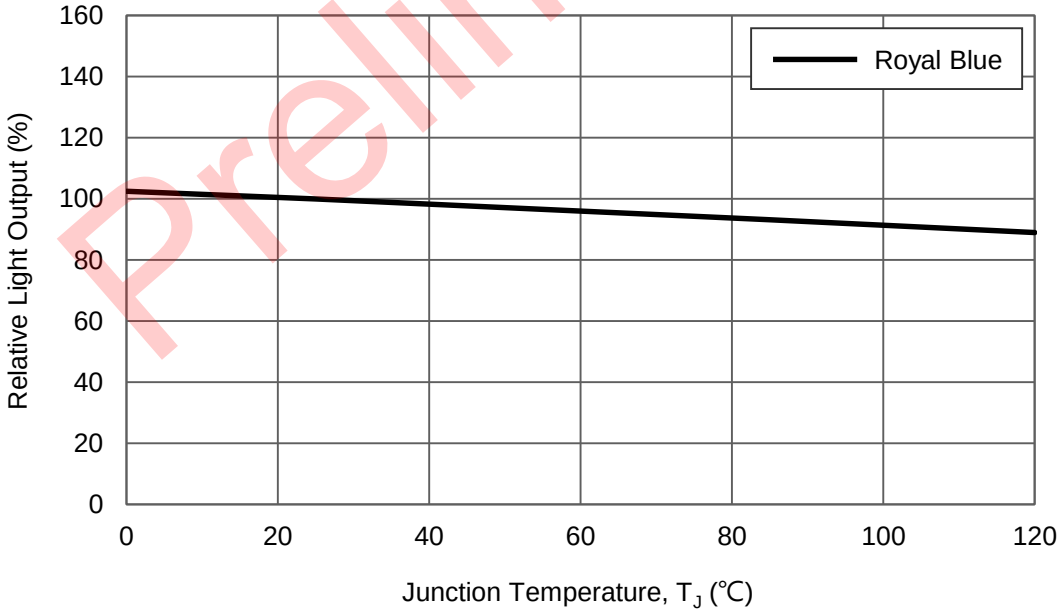

Preliminary

Forward Current Characteristics, T_J = 25˚C

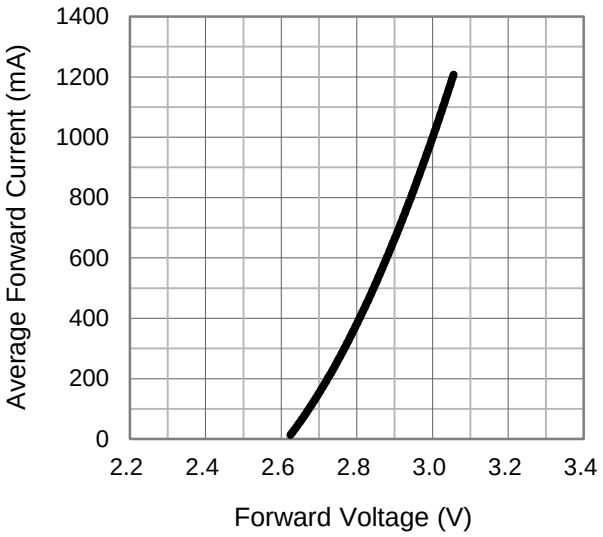

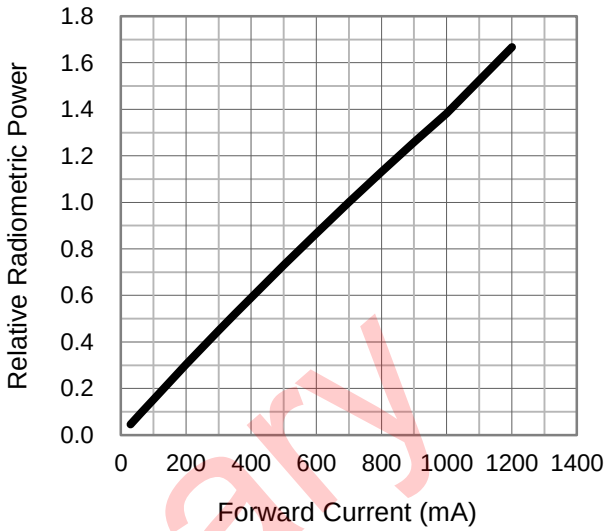

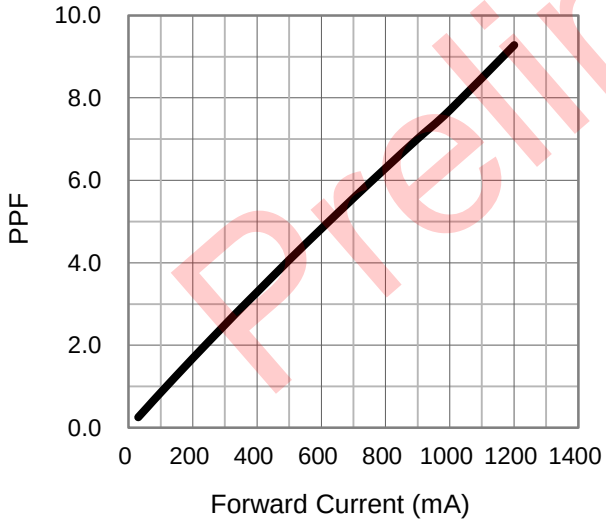

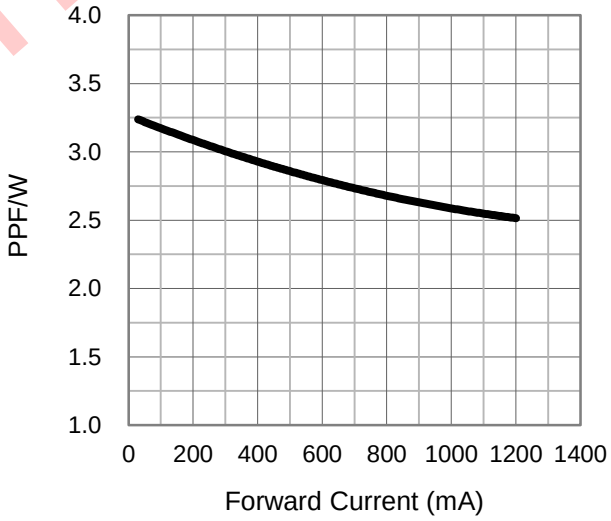

Preliminary

Slug Temperature vs. Maximum Forward Current

1. Royal Blue

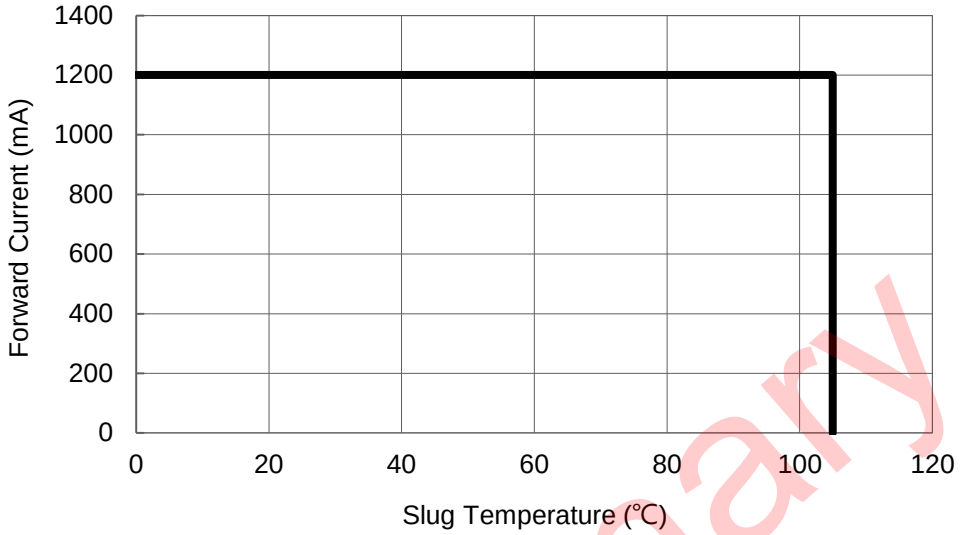

Typical Representative Spatial Radiation Pattern

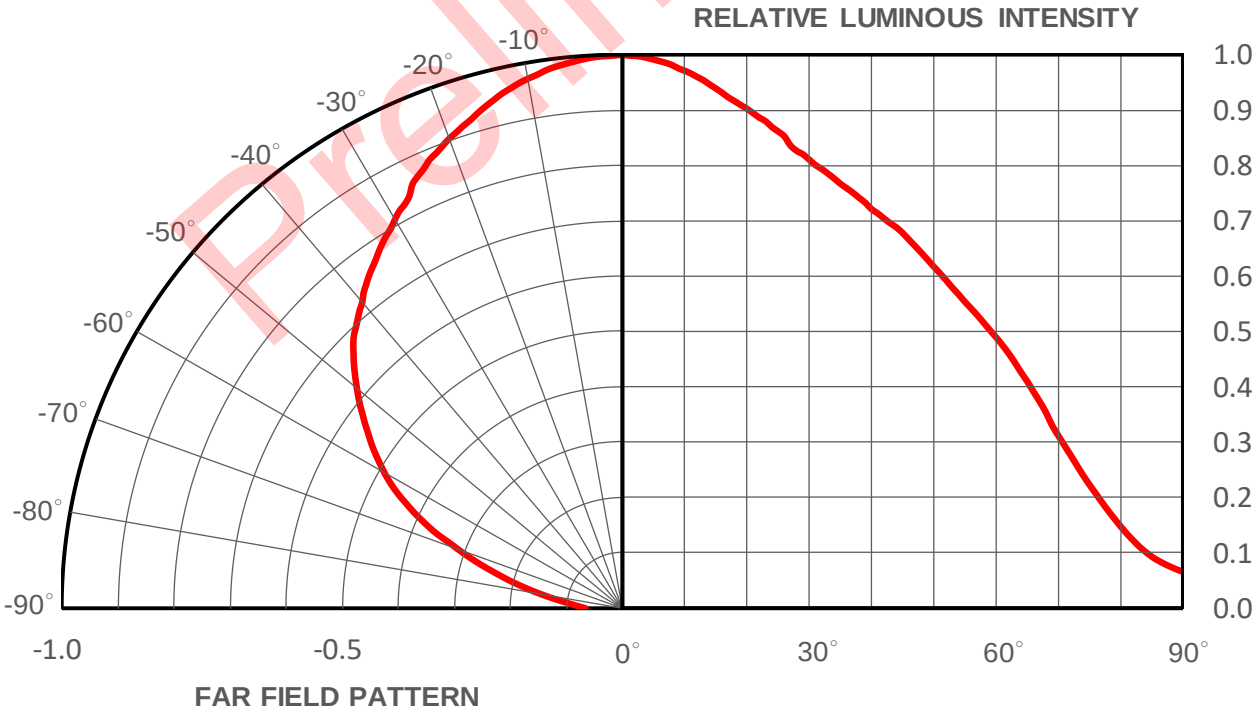

Preliminary

Moisture Sensitivity Level - JEDEC Level 1

Level	Floor Life		Soak Requirements			
			Standard		Accelerated Environment	
	Time	Conditions	Time (hours)	Conditions	Time (hours)	Conditions
1	Unlimited	≤30˚C / 85% RH	168 +5/-0	85˚C / 85% RH	NA	NA

- The standard soak time includes a default value of 24 hours for semiconductor manufature's exposure time (MET) between bake and bag and includes the maximum time allowed out of the bag at the distributor's facility.
- Table below presents the moisture sensitivity level definitions per IPC/JEDEC's J-STD-020C.

Level	Floor Life		Soak Requirements			
			Standard		Accelerated Environment	
	Time	Conditions	Time (hours)	Conditions	Time (hours)	Conditions
1	Unlimited	≤30˚C / 85% RH	168 +5/-0	85˚C / 85% RH	NA	NA
2	1 year	≤30˚C / 60% RH	168 +5/-0	85˚C / 60% RH	NA	NA
2a	4 weeks	≤30˚C / 60% RH	696 +5/-0	30˚C / 60% RH	120 +1/-0	60˚C / 60% RH
3	168 hours	≤30˚C / 60% RH	192 +5/-0	30˚C / 60% RH	40 +1/-0	60˚C / 60% RH
4	72 hours	≤30˚C / 60% RH	96 +2/-0	30˚C / 60% RH	20 +0.5/-0	60˚C / 60% RH
5	48 hours	≤30˚C / 60% RH	72 +2/-0	30˚C / 60% RH	15 +0.5/-0	60˚C / 60% RH
5a	24 hours	≤30˚C / 60% RH	48 +2/-0	30˚C / 60% RH	10 +0.5/-0	60˚C / 60% RH
6	Time on Label (TOL)	≤30˚C / 60% RH	Time on Label (TOL)	30˚C / 60% RH	NA	NA

Preliminary

Qualification Reliability Testing

Stress Test	Stress Conditions	Stress Duration	Failure Criteria
Room Temperature Operating Life (RTOL)	25°C, I_F = max DC (Note 1)	1000 hours	Note 2
Wet High Temperature Operating Life (WHTOL)	85°C/60%RH, I_F = max DC (Note 1)	1000 hours	Note 2
Wet High Temperature Storage Life (WHTSL)	85°C/85%RH, non-operating	1000 hours	Note 2
High Temperature Storage Life (HTSL)	110°C, non-operating	1000 hours	Note 2
Low Temperature Storage Life (LTSL)	-40°C, non-operating	1000 hours	Note 2
Non-operating Temperature Cycle (TMCL)	-40°C to 120°C, 30 min. dwell, <5 min. transfer	200 cycles	Note 2
Mechanical Shock	1500 G, 0.5 msec. pulse, 5 shocks each 6 axis		Note 3
Natural Drop	On concrete from 1.2 m, 3X		Note 3
Variable Vibration Frequency	10-2000-10 Hz, log or linear sweep rate, 20 G about 1 min., 1.5 mm, 3X/axis		Note 3
Solder Heat Resistance (SHR)	260°C ± 5°C, 10 sec.		Note 3
Solderability	Steam age for 16 hrs., then solder dip at 260°C for 5 sec.		Solder coverage on lead

Notes:
1. Depending on the maximum derating curve.
2. Criteria for judging failure

Item	Test Condition	Criteria for Judgement	
		Min.	Max.
Forward Voltage (V_F)	I_F = max DC	--	Initial Level x 1.1
Luminous Flux or Radiometric Power (Φ_V)	I_F = max DC	Initial Level x 0.7	--
Reverse Current (I_R)	V_R = 5V	--	50 μA

* The test is performed after the LED is cooled down to the room temperature.

3. A failure is an LED that is open or shorted.

Preliminary

Recommended Solder Pad Design

Standard Emitter

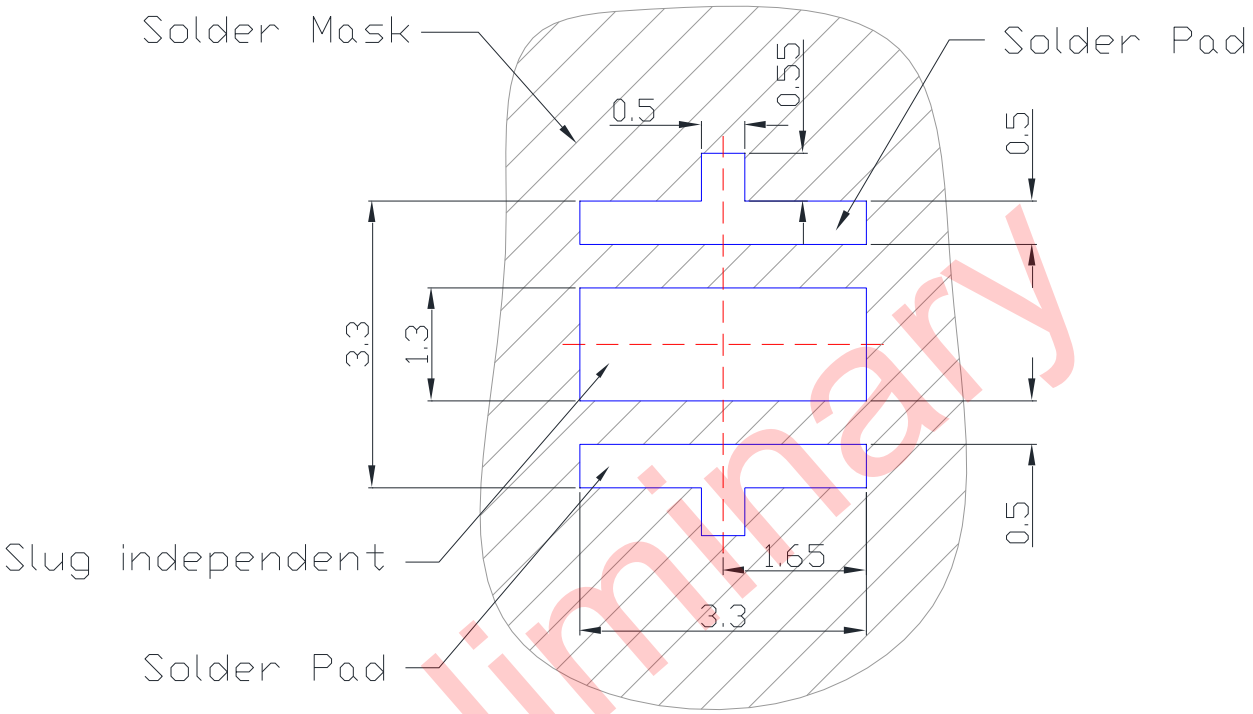

- All dimensions are in millimeters.
- Electrical isolation is required between Slug and Solder Pad.

Preliminary

Reflow Soldering Condition

Profile Feature	Sn-Pb Eutectic Assembly	Pb-Free Assembly
Average Ramp-Up Rate (T_{Smax} to T_P)	3°C / second max.	3°C / second max.
Preheat – Temperature Min (T_{Smin}) – Temperature Max (T_{Smax}) – Time (t_{Smin} to t_{Smax})	100°C 150°C 60-120 seconds	150°C 200°C 60-180 seconds
Time maintained above: – Temperature (T_L) – Time (t_L)	183°C 60-150 seconds	217°C 60-150 seconds
Peak/Classification Temperature (T_P)	240°C	260°C
Time Within 5°C of Actual Peak Temperature (t_P)	10-30 seconds	20-40 seconds
Ramp-Down Rate	6°C/second max.	6°C/second max.
Time 25°C to Peak Temperature	6 minutes max.	8 minutes max.

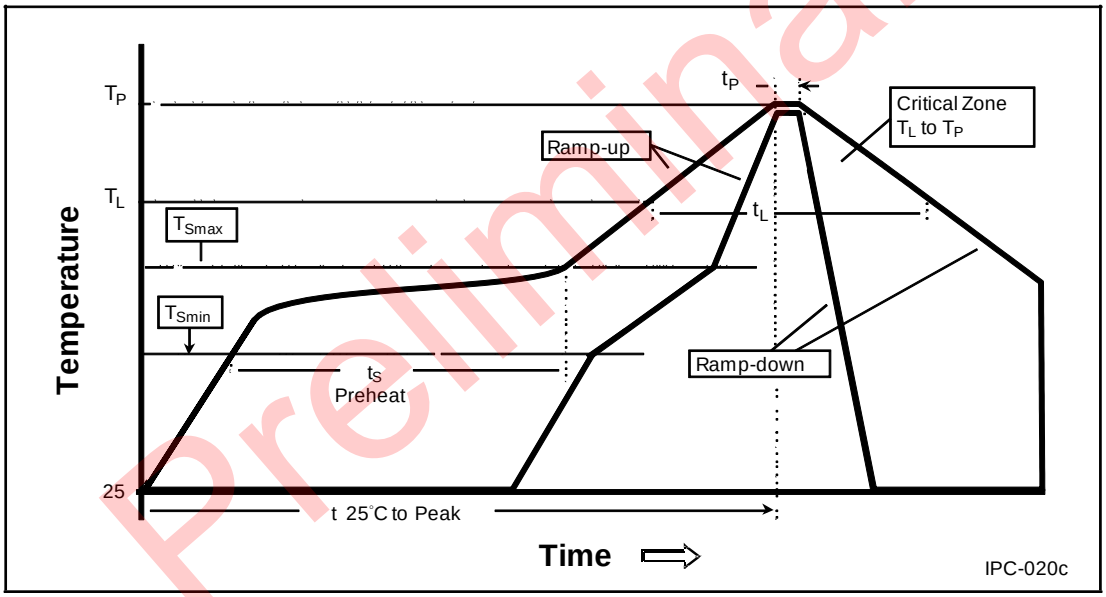

Preliminary

- **We recommend using the M705-S101-S4 solder paste from SMIC (Senju Metal Industry Co., Ltd.) for lead-free soldering.**
- **Do not use solder pastes with post reflow flux residue>47%. (58Bi-42Sn eutectic alloy, etc) This kind of solder pastes may cause a reliability problem to LED.**
- All temperatures refer to topside of the package, measured on the package body surface.
- Repairing should not be done after the LEDs have been soldered. When repairing is unavoidable, a double-head soldering iron should be used. It should be confirmed beforehand whether the characteristics of the LEDs will or will not be damaged by repairing.
- Reflow soldering should not be done more than three times.
- When soldering, do not put stress on the LEDs during heating.
- After soldering, do not warp the circuit board.

Emitter Reel Packaging

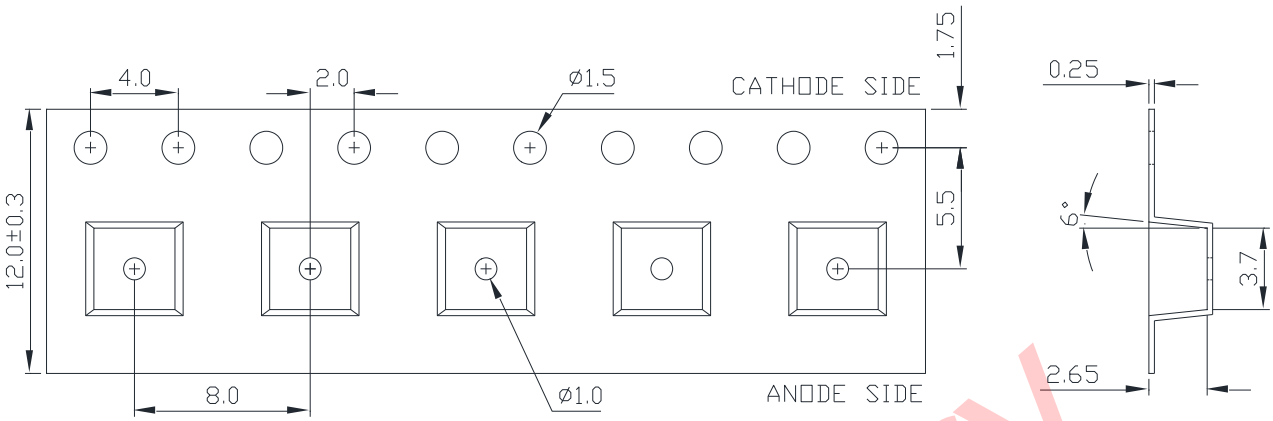

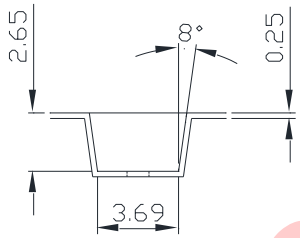

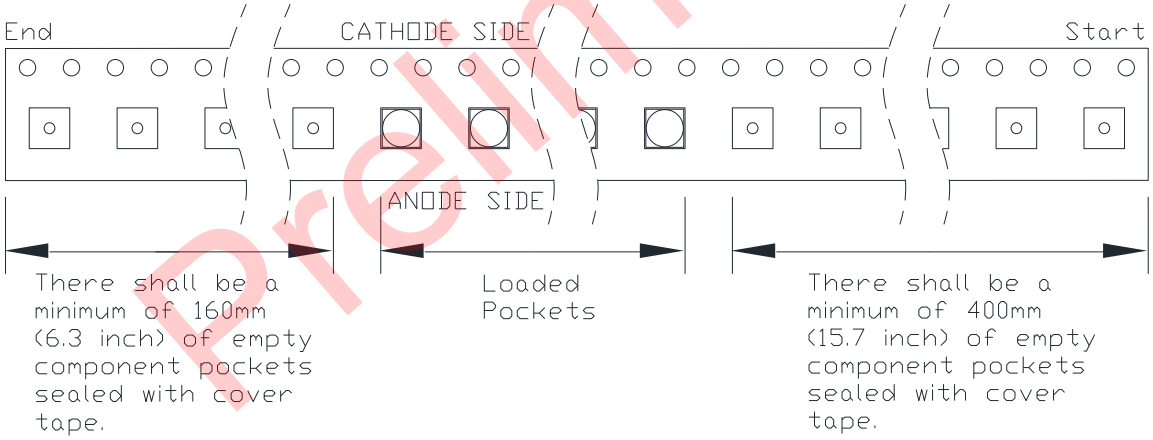

Preliminary

Notes:
1. Drawing not to scale.
2. All dimensions are in millimeters.
3. Unless otherwise indicated, tolerances are ± 0.1mm.

Emitter Reel Packaging

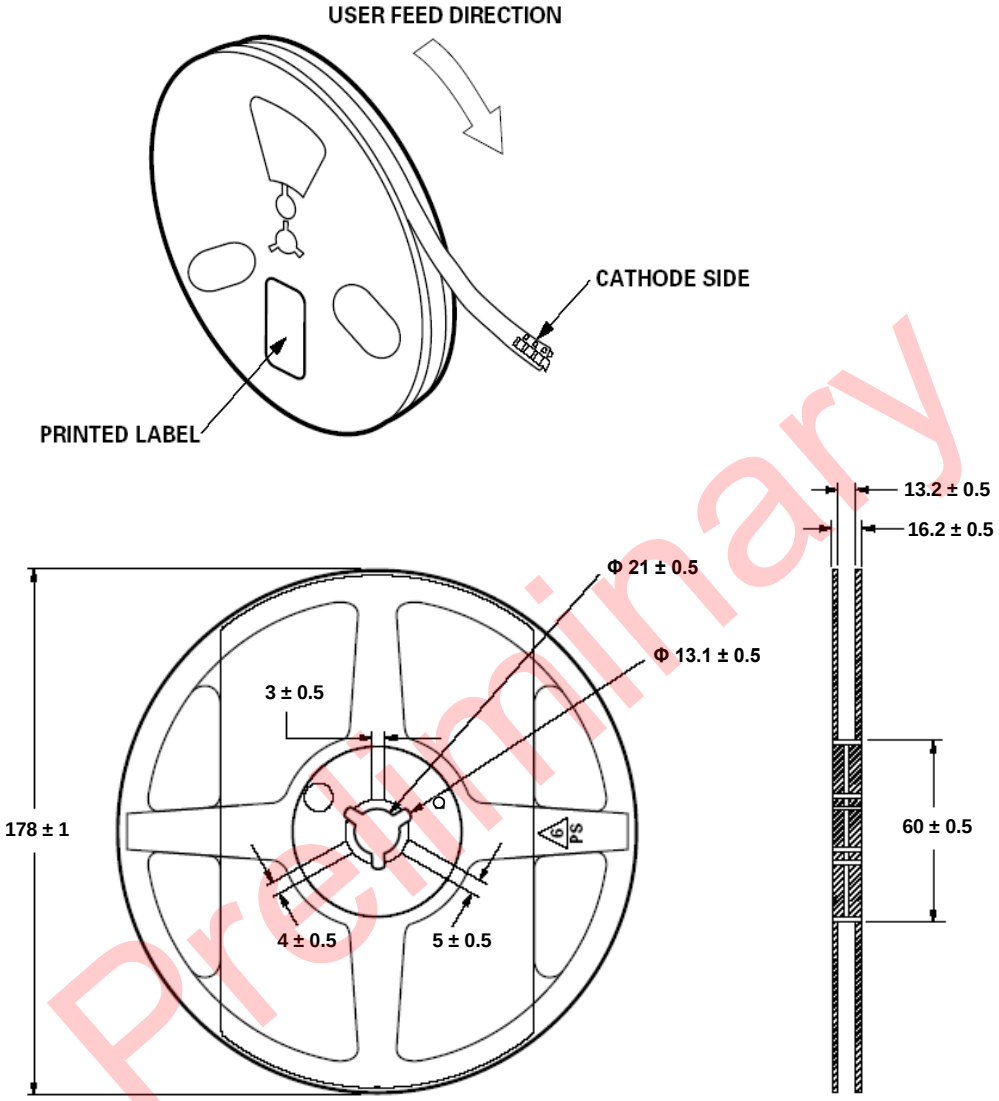

Preliminary

Notes:
1. Empty component pockets sealed with top cover tape.
2. 500 pieces per reel.
3. Drawing not to scale.
4. All dimensions are in millimeters.

Precaution for Use

- Storage
  Please do not open the moisture barrier bag (MBB) more than one week. This may cause the leads of LED discoloration. We recommend storing ProLight's LEDs in a dry box after opening the MBB. The recommended storage conditions are temperature 5 to 30˚C and humidity less than 40% RH. It is also recommended to return the LEDs to the MBB and to reseal the MBB.
- The slug is is not electrically neutral. Therefore, we recommend to isolate the heat sink.
- **We recommend using the M705-S101-S4 solder paste from SMIC (Senju Metal Industry Co., Ltd.) for lead-free soldering.**
- **Do not use solder pastes with post reflow flux residue>47%. (58Bi-42Sn eutectic alloy, etc) This kind of solder pastes may cause a reliability problem to LED.**
- Any mechanical force or any excess vibration shall not be accepted to apply during cooling process to normal temperature after soldering.
- Please avoid rapid cooling after soldering.
- Components should not be mounted on warped direction of PCB.
- Repairing should not be done after the LEDs have been soldered. When repairing is unavoidable, a heat plate should be used. It should be confirmed beforehand whether the characteristics of the LEDs will or will not be damaged by repairing.
- This device should not be used in any type of fluid such as water, oil, organic solvent and etc. When cleaning is required, isopropyl alcohol should be used.
- When the LEDs are illuminating, operating current should be decide after considering the package maximum temperature.
- The appearance, specifications and flux bin of the product may be modified for improvement without notice. Please refer to the below website for the latest datasheets.
  http://www.prolightopto.com/

Handling of Silicone Lens LEDs

Notes for handling of silicone lens LEDs

- Please do not use a force of over 0.3kgf impact or pressure on the silicone lens, otherwise it will cause a catastrophic failure.
- The LEDs should only be picked up by making contact with the sides of the LED body.
- Avoid touching the silicone lens especially by sharp tools such as Tweezers.
- Avoid leaving fingerprints on the silicone lens.
- Please store the LEDs away from dusty areas or seal the product against dust.
- When populating boards in SMT production, there are basically no restrictions regarding the form of the pick and place nozzle, except that mechanical pressure on the silicone lens must be prevented.
- Please do not mold over the silicone lens with another resin. (epoxy, urethane, etc)

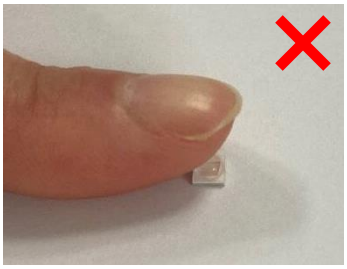

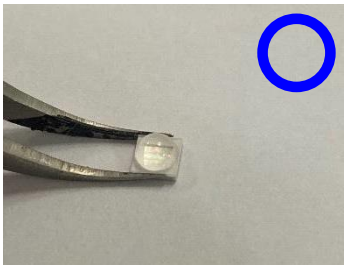

Preliminary