ALCOSWITCH
ANTI-VANDAL SWITCH SERIES

INTRODUCTION

TE Connectivity (TE)'s new ALCOSWITCH Anti-Vandal switch series is designed for security and reliability in a variety of panel mount industrial and building applications. The large pushbutton and available LED indicators illuminate the switch and allow for an easy user interface. The Anti-Vandal series is available in panel sizes of 12mm, 16mm, 19mm, 22mm and 25mm, and with various pushbutton symbols including spot, ring, and power logo. Switches are sealed to IP67 and available in single and double pole configurations.

FEATURES

- Allows for an easy user interface with a large pushbutton and available LED indicators illuminate the switch
- Enable flexibility with various pushbutton symbols including spot, ring, and power logo
- Achieve a vandal resistant solution with a jam nut accessible at rear of the panel
- Ease of installation with available flying lead terminations.

APPLICATIONS

- Industrial equipment
- Elevators/escalators
- Instrumentation
- Communication equipment
- Control equipment
- Medical equipment
- Parking systems
- Emergency communication

ELECTRICAL

- RoHS Directive 2002/95/E compliant
- REACH Compliant and Pb free
- UL (E46765) for AV19, AV22 series

ALCOSWITCH ANTI-VANDAL SWITCH SERIES

TYPICAL PERFORMANCE CHARACTERISTICS

	Anti-Vandal 12	Anti-Vandal 16	Anti-Vandal 19	Anti-Vandal 22	Anti-Vandal 25
				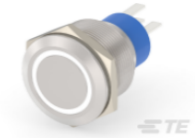	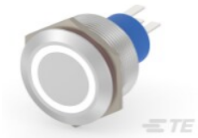
Electrical Specifications					
Number of poles	1 to 2				
Switch functions	OFF-ON, OFF-(ON)				
Contact Rating	100mA @ 24VDC	2A @ 36VDC	3A @ 250VAC/28VDC		
Gold contact	-		0.4 VA @ 20V max.		
Electrical life (pushbutton only)	100,000 cycles	200,000 cycles	50,000 cycles		
Contact resistance	50mΩ max. @ 1A, 12VDC (initial value)				
Insulation resistance	1,000 MΩ min. @500VDC				
Dielectric strength	1,000V for 1 minute	2,000V for 1 minute			
Mechanical					
Actuator force	3.0 ±1.5 N	4.5 ±1.5 N	Single Pole: 2.5 ±1.0 N Double Pole: 3.5 ±1.0 N		
Actuator travel	1.8 mm	2.0 ±2.0 mm	3.2 mm		
Life expectancy	500,000 actuations	1,000,000 actuations	Momentary: 1,000,000 actuations Push On/Off: 500,000 actuation		
Operating temperature	-20°C to +55°C	-20°C to +70°C	-20°C to +55°C		
Materials					
Contacts	Brass, gold plated	Copper with silver or gold plating			
Actuator	Stainless steel/PC	Stainless steel			
Terminals	Brass, Gold flash plated		Copper base, silver/gold plated		
Terminal seal	Silicon				
Case	PA66	PBT			
Bushing	Stainless steel	Al alloy	Stainless steel		

DIMENSIONS (Unit: mm[inches])

Anti-Vandal 12

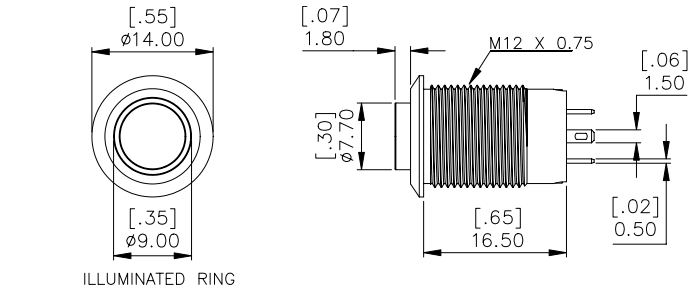

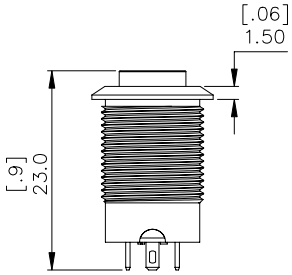

Anti-Vandal 16

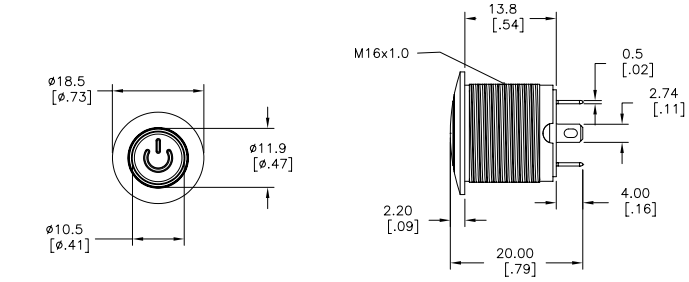

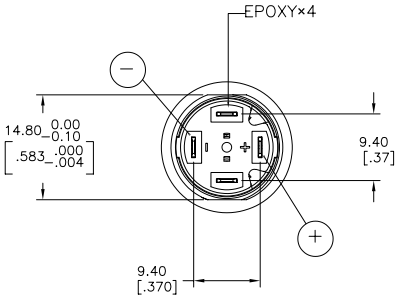

Anti-Vandal 19

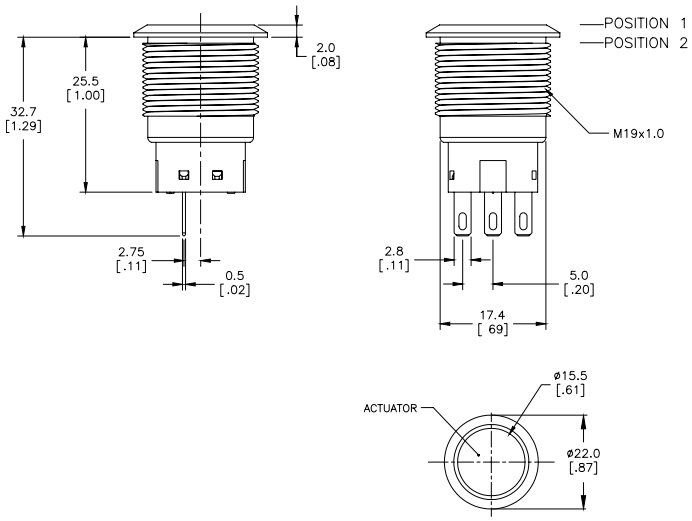

Anti-Vandal 22

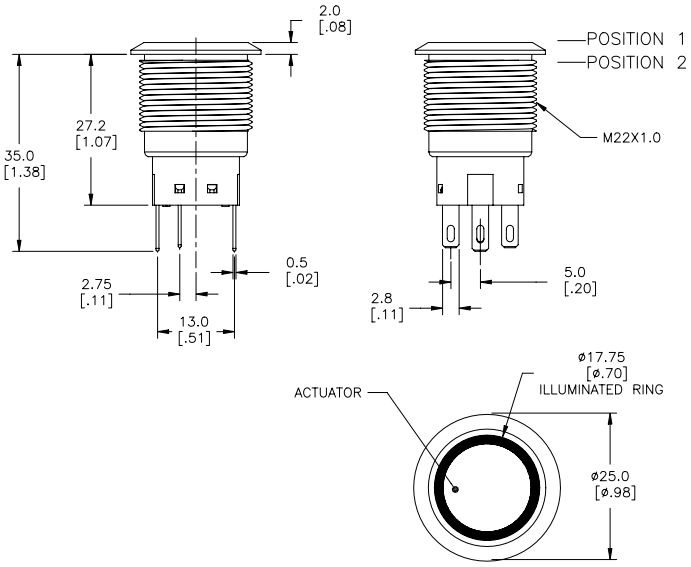

Anti-Vandal 25

Part Number 2316365-1

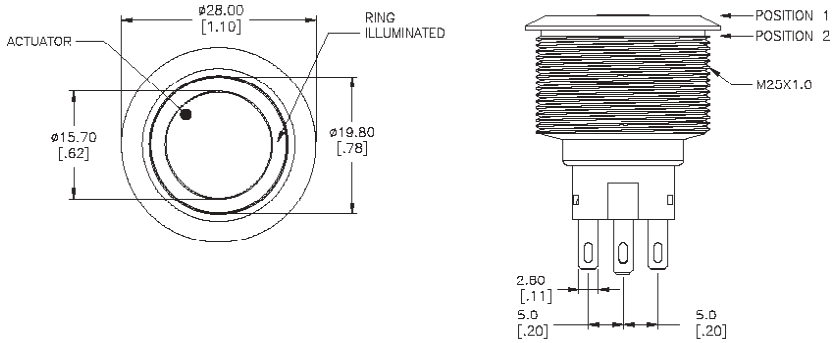

Part Number 2316366-1

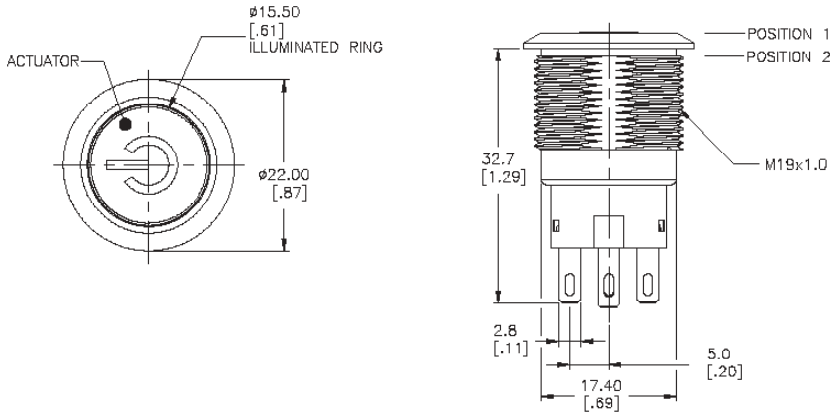

PRODUCT SELECTION EXAMPLES

Product key	Series	Body Style	LED color	LED voltage	Terminal Plating	Part number
AV1210E112R04	12 mm	Single pole - Momentary	White	12 Volts	Silver	2474606-1
AV1210E124R04	12 mm		White	24 Volts	Silver	2474606-6
AV1610R112R04	16 mm		White	12 Volts	Gold	2213774-1
AV1910D512Q04	19 mm		Yellow	12 Volts	Silver	2213765-9
AV1910RAZ4Q04	19 mm		Red / Green	24 Volts	Silver	2317404-2
AV1910EG24T5Q04	19 mm		Red / Yellow	24 Volts	Silver	3-2316531-5
AV2210E324R04	22 mm		Red	24 Volts	Gold	2213772-8
AV2211EB12Q04	22 mm	Single pole - Locking	Red / Blue	12 Volts	Silver	2317570-9
AV2220EB12T5Q04	22 mm	Double pole - Momentary	Red / Blue	12 Volts	Silver	4-2317570-4
AV2510E312Q04	25 mm	Single pole - Momentary	Red	12 Volts	Silver	2317656-3
AV2521M124Q04	25 mm	Double pole - Locking	White	24 Volts	Silver	2-2317658-6
AV2511MB12T5Q04	25 mm	Single pole - Locking	Red / Blue	12 Volts	Silver	2317659-7

PRODUCT CODE STRUCTURE

Product Key

AV19	10	R	1	12	_	Q	04

Series

AV12	Anti-Vandal series, 12mm size
AV16	Anti-Vandal series, 16mm size
AV19	Anti-Vandal series, 19mm size
AV22	Anti-Vandal series, 22mm size
AV25	Anti-Vandal series, 25mm size

Body style

10	Single Pole - Momentary
11	Single Pole - ON/OFF
20	Double Pole - Momentary
21	Double Pole - ON/OFF

LED type

0	No LED
R	Fixed ring
D	Spot
P	Power logo
E	Moving ring
E1	Moving ring without Power logo

Environmental

04	RoHs compliant

Plating

Q	Silver
R	Gold

Terminal style

	Solder terminal
T5	Flying leads (500mm)

LED voltage

0	No LED
12	12 Volts
24	24 Volts

LED color

0	No LED
1	White
3	Red
5	Yellow
6	Green
7	Blue
A	Red & Green
B	Red & Blue
C	Red & Yellow

te.com

©2023 TE Connectivity Ltd. Family of Companies. All Rights Reserved.

ALCOSWITCH, TE Connectivity, TE connectivity (logo) and Every Connection Counts are trademarks owned or licensed by the TE Connectivity family of companies. All other logos, products and/or company names referred to herein might be trademarks of their respective owners.

While TE has made every reasonable effort to ensure the accuracy of the information in this document, TE does not guarantee that it is error-free, nor does TE make any other representation, warranty or guarantee that the information is accurate, correct, reliable or current. TE reserves the right to make any changes to the information contained herein without prior notice. TE Connectivity assumes only those obligations set forth in the terms and conditions for this product and shall in no event be liable for any incidental, indirect, or consequential damages arising out of the sale, resale, use, or misapplication of the product. TE expressly disclaims any implied warranties with respect to the information contained herein, including, but not limited to, implied warranties of merchantability or fitness for a particular purpose. Dimensions, specifications and/or information contained herein are for reference purposes only and are subject to change without notice. Consult TE for the latest dimensions, specifications and/or information. Users of TE Connectivity products must make their own assessment as to whether the respective product is suitable for the respective desired application.

11/23 ED

USA: +1 (800) 522-6752

Canada: +1 (905) 475-6222

Mexico: +52 (0) 55-1106-0800

Latin/S. America: +54 (0) 11-4733-2200

Germany: +49 (0) 6251-133-1999

UK: +44 (0) 800-267666

France: +33 (0) 1-3420-8686

The Netherlands: +31 (0) 73-6246-999

China: +86 (0) 400-820-6015