F/UCW03 LF

Technical terms *Technische Daten*

Rated Voltage *Nennspannung*	3V
Operating voltage *Betriebsspannungsbereich*	2...5V
a) Rated Current *Nennstrom*	≤30mA
a) Sound Output [SPL]at 10 cm *Schalldruckpegel] in 10 cm*	≥82dB
a) Resonant Frequency *Resonanzfrequenz*	2300 ±400Hz
Operating Temperature *Betriebs-Temperatur*	-40 ...+85℃
Storage Temperature *Lagerungs-Temperatur*	-40 ...+85℃
Weight *Gewicht*	2g

a) Value applying rated voltage (DC)
Wert bei angelegter Nennspannung (DC)

Drawing *Zeichnung*

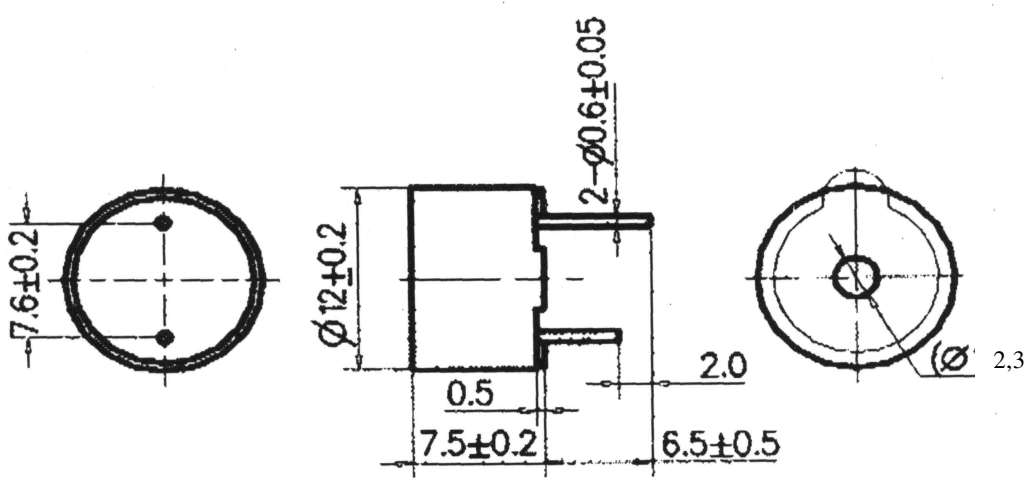

Diese Zeichnung ist unser Eigentum. Vervielfältigung unbefugte Verwertung, Mitteilung an andere ist strafbar und schadensersatzpflichtig

DIGISOUND			Halbzeug, Werkstoff		Untolerierte Maße	Zeichn.-Nr. 051102.1B	
					Maßstab	Ersatz f. Zeichn.	Page Blatt 1 of von 2
	Tag	Name	And. zust.	And.-Mittlg. Nr.	Tag	Name	
gezeichnet			1	Hole	26.06.06	FM	F/UCW03 LF
bearbeitet	02.11.05	FM					
geprüft							
normgepr.							

Vervielfält.-Pause Nr.

Arbeitspause Nr.

sales@prom-elec.com / ООО ПРОМЭЛЕКТРОНИКА

Reliability *Zuverlässigkeit*

Item	Method of test	Standard
Storage in high temperature	Storage in +85℃ test box for 96hours, then expose to the room temperature for 2hours without applying power.	All specifications must be satisfied in this condition.
Storage in low temperature	Storage in –40℃ test box for 96hours, then expose to the room temperature for 2hours without applying power.	All specifications must be satisfied in this condition.
Life test in room temperature	Operate continuously for 1000 hours with applying rated voltage.	All specifications must be satisfied in this condition.
Life test in high temperature	Operate continuously in +85℃ for 500hours applying 6.5V.	All specifications must be satisfied in this condition.
Life test in low temperature	Operate continuously in –40℃ for 500hours applying 4V.	All specifications must be satisfied in this condition.
Temperature cycle test	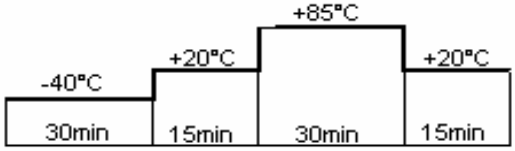 Make this test for 5 cycles without applying power, then expose to the room temperature for 2 hours.	All specifications must be satisfied in this condition.
Humidity cycle test	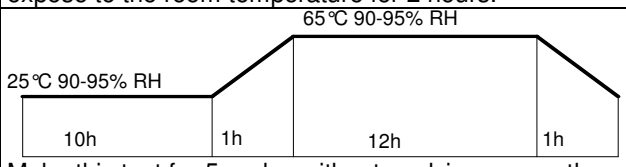 Make this test for 5 cycles without applying power, then expose to the room temperature for 2 hours.	All specifications must be satisfied in this condition.
Vibration test	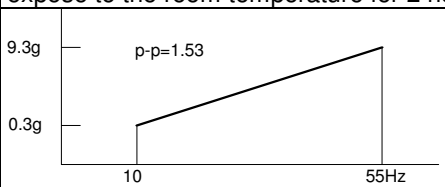 Make this test for the directions X,Y and Z for 30minutes each. To- and -fro sweep time is 1min.	All specifications must be satisfied in this condition.
Drop test	Drop a buzzer naturally from the height of 700mm to the surface of 10 mm thick woodenboard. Three directions (X,Y &Z)	All specifications must be satisfied in this condition.
Solderability	Temperature: 245 ± 5℃ Duration: 3 sec After test minimum 95% coverage of surface	All specifications must be satisfied in this condition.
Resistance against solder-heat	No deterioration after dipping in solder 265±5℃ for 10sec.	All specifications must be satisfied in this condition
Pin Strenght	Each Pin may withstand against pulling force of 1kg for 30seconds	All specifications must be satisfied in this condition

Diese Zeichnung ist unser Eigentum. Vervielfältigung unbefugte Verwertung, Mitteilung an andere ist strafbar und schadensersatzpflichtig

DIGISOUND

Halbzeug, Werkstoff

Untolerierte Maße

Maßstab

Zeichn.-Nr. 051102.1B

Ersatz f. Zeichn.

Vervielfält.-Pause Nr.

Arbeitspause Nr.

	Tag	Name	And. zust.	And.-Mittlg. Nr.	Tag	Name
gezeichnet			1	Hole	26.06.06	FM
bearbeitet	02.11.05	FM				
geprüft						
normgepr.						

F/UCW03 LF