LCD TFT Module Specification

Riverdi
our pixels behave

RVT3.5B320240CFWR00

LCD TFT Datasheet

Rev.1.1
2015-01-07

ITEM	CONTENTS	UNIT
LCD Type	TFT/Transmissive/Normally white	/
Size	3.5	Inch
Viewing Direction	12:00 (without image inversion)	O' Clock
Gray Scale Inversion Direction	6:00	O' Clock
LCM (W × H × D)	77.70 x 64.70 x 8.40	mm^3
Active Area (W × H)	70.08 × 52.56	mm^2
Dot Pitch (W × H)	0.73 × 0.219	mm^2
Number Of Dots	320 (RGB) × 240	/
Controller IC	FT800	/
Backlight Type	6 LEDs	/
Surface Luminance	450	cd/m^2
Interface Type	SPI/I2C	/
Color Depth	262k	/
Pixel Arrangement	RGB Vertical Stripe	/
Input Voltage	3.3	V
With/Without TSP	Resistive touch panel	/
Weight	68	g

Note 1: RoHS compliant

Note 2: LCM weight tolerance: ± 5%.

sales@prom-elec.com / ООО ПРОМЭЛЕКТРОНИКА

REVISION RECORD

REVNO.	REVDATE	CONTENTS	REMARKS
1.0	2014-05-16	Initial Release	
1.1	2015-01-07	Update surface luminance, update LED livetime, update response time	

CONTENTS

REVISION RECORD 2
CONTENTS 2
1. MODULE CLASSIFICATION INFORMATION 3
2. MODULE DRAWING 4
3. ABSOLUTE MAXIMUM RATINGS 4
4. ELECTRICAL CHARACTERISTICS 4
5. ELECTRO-OPTICAL CHARACTERISTICS 4
6. INTERFACE DESCRIPTION 6
7. FT800 CONTROLLER SPECIFICATIONS 7
7.1. Serial host interface 7
7.2. Block Diagram 8
7.3. Host interface SPI mode 0 8
7.4. Backlight driver block diagram 8
8. LCD TIMING CHARACTERISTICS 9
8.1. Timing Chart 9
8.2. 24 Bit RGB Mode for 320 x RGB x 240 10
9. TOUCH SCREEN PANEL SPECIFICATIONS 11
9.1. Electrical characteristics 11
9.2. Mechanical & Reliability characteristics 12
10. RELIABILITY TEST 12

1. MODULE CLASSIFICATION INFORMATION

RV	T	3.5	B	320240	C	F	W	R	00
1.	2.	3.	4.	5.	6.	7.	8.	9.	10.

1.	**BRAND**	**RV** – Riverdi
2.	**PRODUCT TYPE**	**T – TFT Standard** **F** – TFT Custom
3.	**DISPLAY SIZE**	**3.5 – 3.5”** **4.3** – 4.3” **5.7** – 5.7” **7.0** – 7.0”
4.	**MODEL SERIAL NO.**	**B (A-Z)**
5.	**RESOLUTION**	**320240 – 320x240 px** **480272** – 480x272 px **800480** – 800x480 px
6.	**INTERFACE**	T – TFT LCD, RGB **L** – TFT LCD, LVDS **C – TFT + Controller**
7.	**FRAME**	**N** – No Frame **F – Mounting Frame**
8.	**BACKLIGHT TYPE**	**W – LED White**
9.	**TOUCH PANEL**	**N** – No Touch Panel **R – Resistive Touch Panel** **C** – Capacitive Touch Panel
10.	**VERSION**	**00** (00-99)

PIN	DESC
1	VDD
2	GND
3	SPI_SCLK/ I2C_SCL
4	MISO/I2C_SDA
5	MOSI/I2C_SA0
6	CS/I2C_SA1
7	INT
8	PD
9	MODE
10	AUDIO_OUT
11	NC
12	NC
13	NC
14	NC
15	NC
16	NC
17	BLVDD
18	BLVDD
19	BLGND
20	BLGND

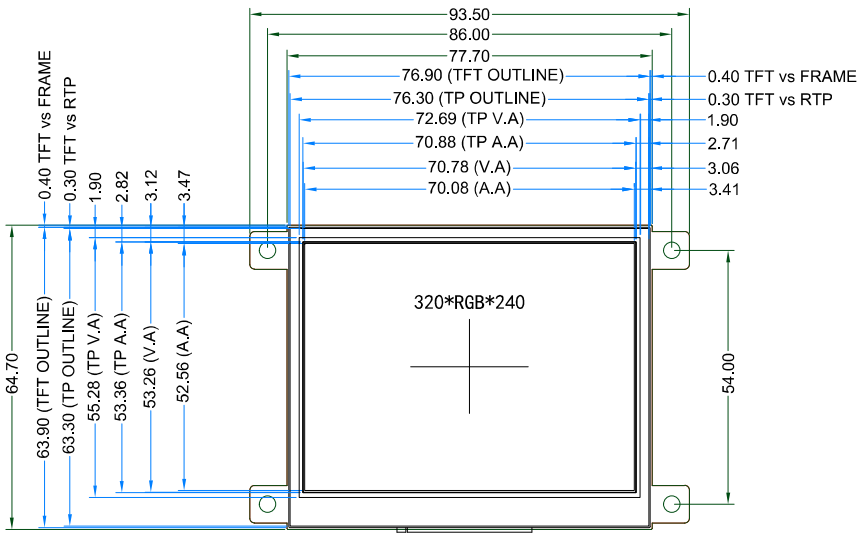

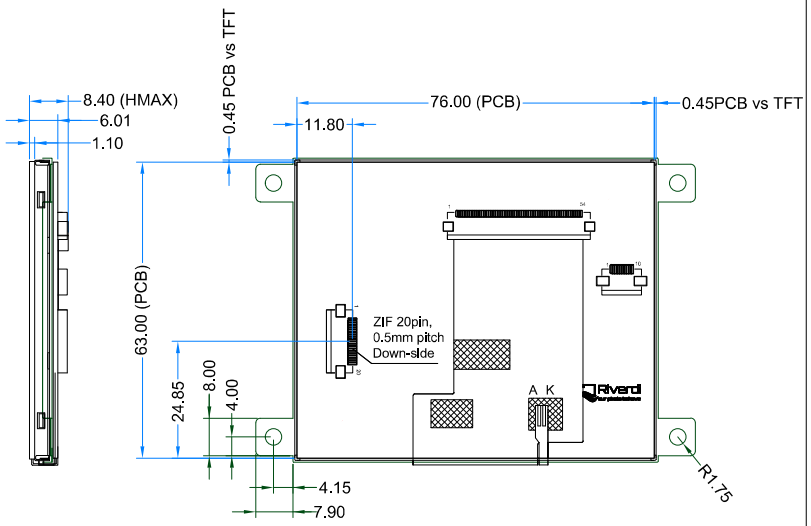

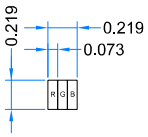

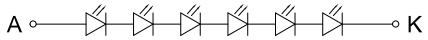

INTERNAL BACKLIGHT LED CONNECTION

NOTES:

1. DISPLAY TYPE: TFT, TRANSMISSIVE, NORMALLY WHITE
2. OPERATION VOLTAGE: VDD=3.3V
3. VIEWING DIRECTION: 12 O'CLOCK
4. IC CONTROLLER: FT800
5. OPERATING TEMP.: -20°C ~ 70°C
6. STORAGE TEMP.: -30°C ~ 80°C
7. LED BACKLIGHT: 6-LED WHITE, BUILT-IN INVERTER
8. SURFACE LUMINANCE: 450 cd/m^2
9. GENERAL TOLERANCE: ±0.2
10. RoHS COMPLIANT
11. BLGND internally connected to GND

CUSTOMER APVL		DATE	2015-01-05
DRAWN	SCALE	TITLE	
DFTG CHK	UNIT mm	RVT3.5B320240CFWR00	
ENGR CHK		MODEL	
APPROVAL			
Riverdi our pixels behave		DWG NO	PAGE 1/1

3. ABSOLUTE MAXIMUM RATINGS

PARAMETER	SYMBOL	MIN	MAX	UNIT
Supply Voltage For Logic (VDD pin)	VDD	0	4.0	V
Supply Voltage For Logic (BLVDD pins)	BLVDD	0	7.0	V
Input Voltage For Logic	VIN	GND	VDD	V
Operating Temperature	T_{OP}	-20	70	°C
Storage Temperature	T_{ST}	-30	80	°C
Humidity	RH	-	90%(Max 60°C)	RH

4. ELECTRICAL CHARACTERISTICS

PARAMETER	SYMBOL	MIN	TYP	MAX	UNIT	NOTES
Supply Voltage For Module	VDD	3.0	3.3	3.6	V	
Input Voltage for LED Inverter	BLVDD	2.8	3.3	5.5	V	
Input Current (Exclude LED Backlight)	IDD	-	55	69	mA	VDD = 3.3V
LED Backlight Current	$IDD_{backlight}$		150	188	mA	BLVDD=3.3V
LED Backlight Current	$IDD_{backlight}$		93	117	mA	BLVDD=5V
Total Input Current (Include LED Backlight 100%)	IDD_{total}	-	205	257	mA	BLVDD=3.3V
Input Voltage ' H ' level	V_{IH}	0.7VDD	-	VDD	V	
Input Voltage ' L ' level	V_{IL}	0	-	0.2VDD	V	
LED Life Time	-	40000	50000	-	Hrs	Note 1

Note 1: The LED life time is defined as the module brightness decrease to 50% original brightness at Ta=25°C.

5. ELECTRO-OPTICAL CHARACTERISTICS

ITEM		SYMBOL	CONDITION	MIN	TYP	MAX	UNIT	REMARK	NOTE
Response Time		Tr+Tf	θ=0° Ø=0° Ta=25°C	-	25	30	ms	Figure 1	4
Contrast Ratio		Cr		-	350	-	---	Figure 2	1
Luminance Uniformity		δ WHITE		75	80	-	%	Figure 2	3
Surface Luminance		Lv		-	450	-	cd/m²	Figure 2	2
Viewing Angle Range		θ	Ø = 90°	30	40	-	deg	Figure 3	6
			Ø = 270°	50	60	-	deg	Figure 3	
			Ø = 0°	50	60	-	deg	Figure 3	
			Ø = 180°	50	60	-	deg	Figure 3	
CIE (x, y) Chromaticity	Red	x	θ=0° Ø=0° Ta=25°C	0.574	0.624	0.674	Figure 2		5
		y		0.318	0.368	0.418			
	Green	x		0.300	0.350	0.400			
		y		0.500	0.550	0.600			
	Blue	x		0.093	0.143	0.193			
		y		0.069	0.119	0.169			
	White	x		0.260	0.310	0.360			
		y		0.283	0.333	0.383			
NTSC	-	-	-	-	50	-	%		-

Note 1. Contrast Ratio(CR) is defined mathematically as below, for more information see Figure 1.

$$\text{Contrast Ratio} = \frac{\text{Average Surface Luminance with all white pixels (P1, P2, P3, P4, P5)}}{\text{Average Surface Luminance with all black pixels (P1, P2, P3, P4, P5)}}$$

Note 2. Surface luminance is the LCD surface from the surface with all pixels displaying white. For more information see Figure 2.

Lv = Average Surface Luminance with all white pixels (P1, P2, P3, P4, P5)

Note 3. The uniformity in surface luminance δ WHITE is determined by measuring luminance at each test position 1 through 5, and then dividing the maximum luminance of 5 points luminance by minimum luminance of 5 points luminance. For more information see Figure 2.

$$\delta\,\text{WHITE} = \frac{\text{Minimum Surface Luminance with all white pixels (P1, P2, P3, P4, P5)}}{\text{Maximum Surface Luminance with all white pixels (P1, P2, P3, P4, P5)}}$$

Note 4. Response time is the time required for the display to transition from white to black (Rise Time, Tr) and from black to white (Decay Time, Tf). For additional information see Figure 1. The test equipment is Autronic-Melchers's ConoScope series.

Note 5. CIE (x, y) chromaticity, the x, y value is determined by measuring luminance at each test position 1 through 5, and then make average value.

Note 6. Viewing angle is the angle at which the contrast ratio is greater than 2. For TFT module the contrast ratio is greater than 10. The angles are determined for the horizontal or x axis and the vertical or y axis with respect to the z axis which is normal to the LCD surface. For more information see Figure 3.

Note 7. For viewing angle and response time testing, the testing data is based on Autronic-Melchers's ConoScope series. Instruments for Contrast Ratio, Surface Luminance, Luminance Uniformity, CIE the test data is based on TOPCON's BM-5 photo detector.

Note 8. For TFT module, gray scale reverse occurs in the direction of panel viewing angle.

Figure 1. The definition of response time

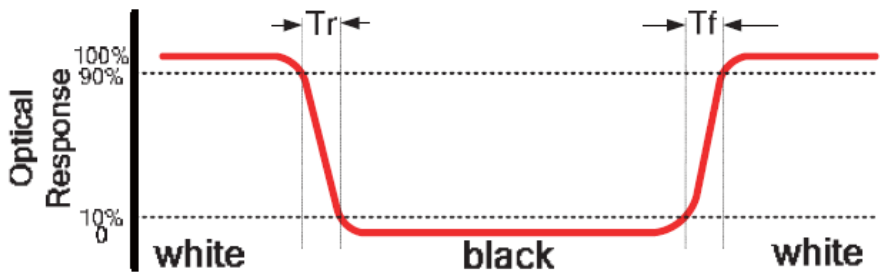

Figure 2. Measuring method for Contrast ratio, surface liminance, Liminance uniformity, CIE (x,y) chromaticity

A : 5 mm
B : 5 mm
H,V : Active Area
Light spot size ∅=5mm, 500mm distance from the LCD surface to detector lens
measurement instrument is TOPCON's luminance meter BM-5

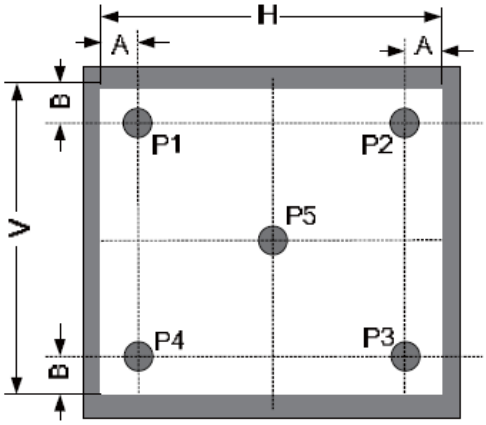

Figure 3. The definiton of viewing angle

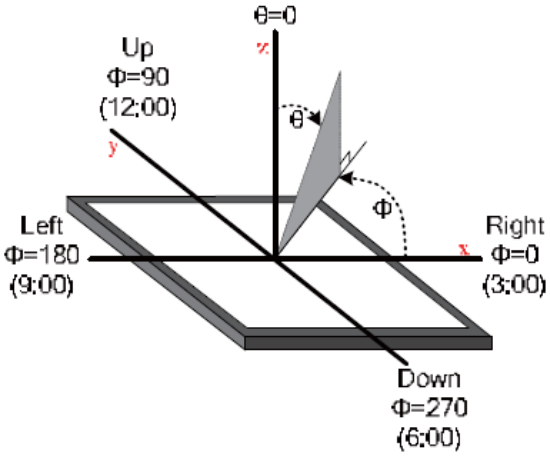

6. INTERFACE DESCRIPTION

PIN NO.	SYMBOL	DESCRIPTION
1	VDD	Power Supply
2	GND	Ground
3	SPI_SCLK/ I2C_SCL	SPI SCK Signal / I2C SCL Signal, Pulled Up Inside Display by 47k Resistor
4	MISO/ I2C_SDA	SPI MISO Signal / I2C SDA Signal, Pulled Up Inside Display by 47k Resistor
5	MOSI/ I2C_SA0	SPI MOSI Signal / I2C Slave Address Bit 0, Pulled Up Inside Display by 47k Resistor
6	CS/I2C_SA1	SPI Chip Select Signal / I2C Slave Address Bit 1, Pulled Up Inside Display by 47k Resistor
7	INT	Interrupt Signal, Active Low, Pulled Up Inside Display by 47k Resistor
8	PD	Power Down Signal, Active Low, Pulled Up Inside Display by 47k Resistor
9	MODE	Host Interface SPI(Pull Low) or I2C(Pull Up) Mode Select Input, By Default Pulled Low Inside Display by 47k Resistor
10	AUDIO_OUT	Audio Out Signal

11	NC	Not Connected
12	NC	Not Connected
13	NC	Not Connected
14	NC	Not Connected
15	NC	Not Connected
16	NC	Not Connected
17	BLVDD	Backlight Power Supply, Can Be Connected to VDD
18	BLVDD	Backlight Power Supply, Can Be Connected to VDD
19	BLGND	Backlight Ground, Internally connected to GND
20	BLGND	Backlight Ground, Internally connected to GND

7. FT800 CONTROLLER SPECIFICATIONS

FT800 or EVE (Embedded Video Engine) simplifies the system architecture for advanced human machine interfaces (HMIs) by providing functionality for display, audio, and touch as well as an object oriented architecture approach that extends from display creation to the rendering of the graphics.

7.1. Serial host interface

Figure 4.SPI interface connection

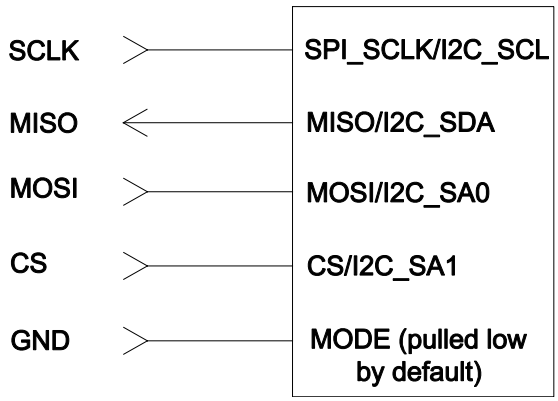

Figure 5.I2C interface connection

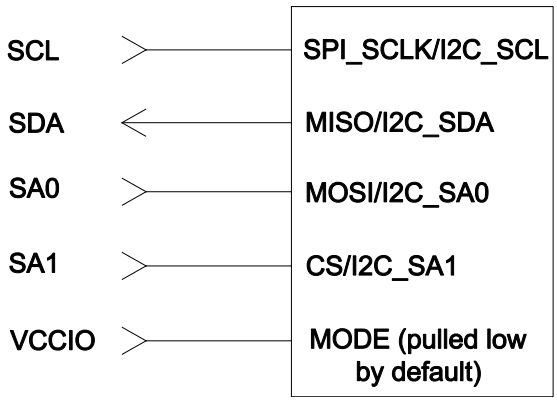

SPI Interface – the SPI slave interface operates up to 30MHz.
Only SPI mode 0 is supported. The SPI interface is selected by default (MODE pin is internally pulled low by 47k resistor).

I²C Interface – the I²C slave interface operates up to 3.4MHz, supporting standard-mode, fast-mode, fast-mode plus and high-speed mode.

The I²C device address is configurable between 20h to 23h depending on the I²C_SA[1:0] pin setting, i.e. the 7-bit I²C slave address is 0b'01000A1A0.

The I²C interface is selected when the MODE pin is tied to VDDIO.

7.2. Block Diagram

Figure 6. FT800 Block diagram

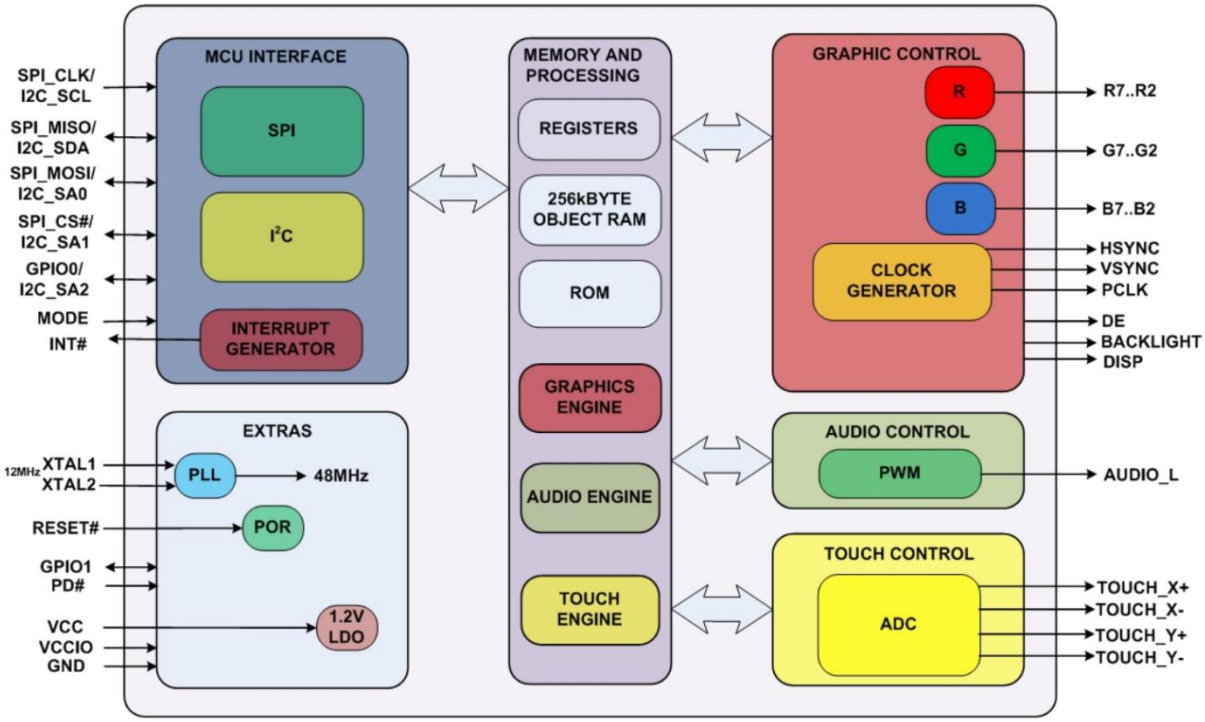

7.3. Host interface SPI mode 0

Figure 7. SPI timing diagram

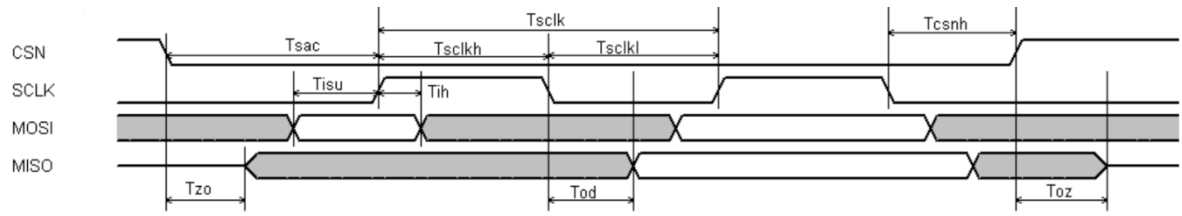

For more information about FT800 controller please go to official FT800 Datasheet.
http://www.ftdichip.com/Support/Documents/DataSheets/ICs/DS_FT800.pdf

7.4. Backlight driver block diagram

Backlight enable signal is internally connected to FT800 Backlight control pin. This pin is controlled by two FT800's registers. One of them specifies the PWM output frequency, second one specifies the duty cycle. Refer to FT800 datasheet for more information.

Figure 8. Backlight driver block diagram

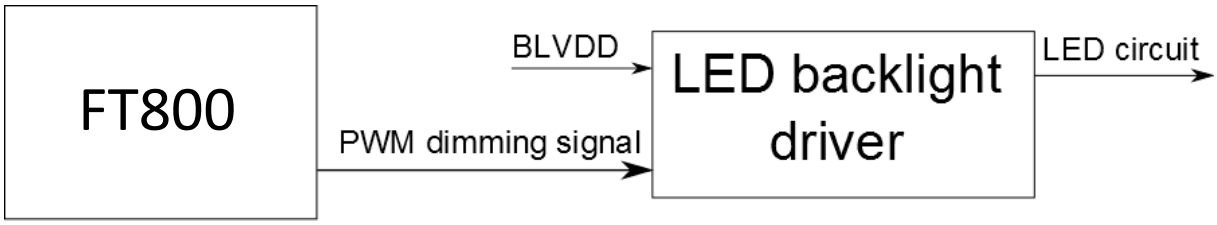

8. LCD TIMING CHARACTERISTICS

8.1. Timing Chart

Timing parameter (VDD=3.3V, GND=0V, Ta=25˚C)

PARAMETER	SYMBOL	MIN	TYP	MAX	UNIT	CONDITION
CLK Clock Time	T_{clk}	1/Max(F_{CLK})	-	1/Min(F_{CLK})	ns	-
CLK Pulse Duty	T_{chw}	40	50	60	%	T_{CLK}
HSYNC to CLK	T_{hc}	-	-	1	CLK	-
HSYNC Width	T_{hwh}	1	-	-	CLK	-
VSYNC Width	T_{vwh}	1	-	-	ns	-
HSYNC Period Time	T_h	60	63.56	67	ns	-
VSYNC Set-up Time	T_{vst}	12	-	-	ns	-
VSYNC Hold Time	T_{vhd}	12	-	-	ns	-
HSYNC Setup Time	T_{hst}	12	-	-	ns	-
HSYNC Hold Time	T_{hhd}	12	-	-	ns	-
Data Set-up Time	T_{dsu}	12	-	-	ns	D00~D23 to CLK
Data Hold Time	T_{dhd}	12	-	-	ns	D00~D23 to CLK
DEN Set-up Time	T_{esu}	12	-	-	ns	DEN to CLK

Figure 9. DE mode timing diagram

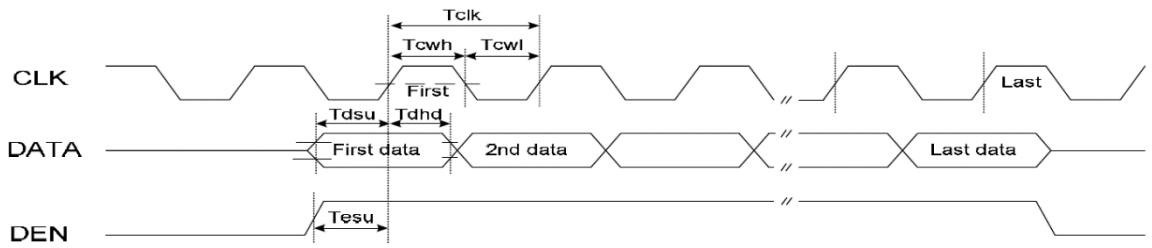

Figure 10. SYNC mode timing diagram

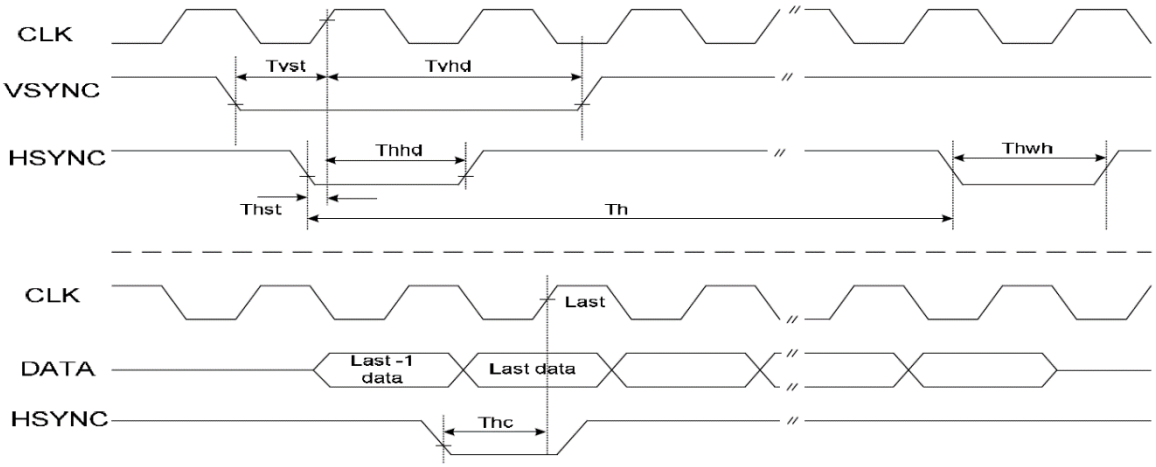

Figure 11. Timing diagram

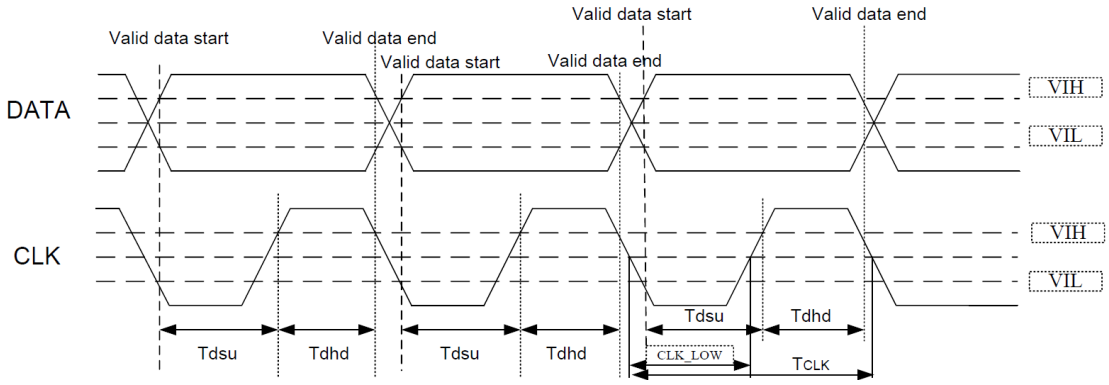

8.2. 24 Bit RGB Mode for 320 x RGB x 240

PARAMETER	SYMBOL	MIN	TYP	MAX	UNIT	CONDITION
CLK Frequency	F_{clk}	7.0	8.0	9.0	MHz	VDD=3.0V~3.6V
CLK Cycle Time	T_{clk}	143	125	111	ns	-
CLK Pulse Duty	T_{cwh}	40	50	60	%	-
Time that HSYNC to 1st Data Input (NTSC)	T_{hs}	40	70	255	CLK	DDLY=70 Offset=0(fixed)

Figure 12. 24 bit RGB SYNC mode timing

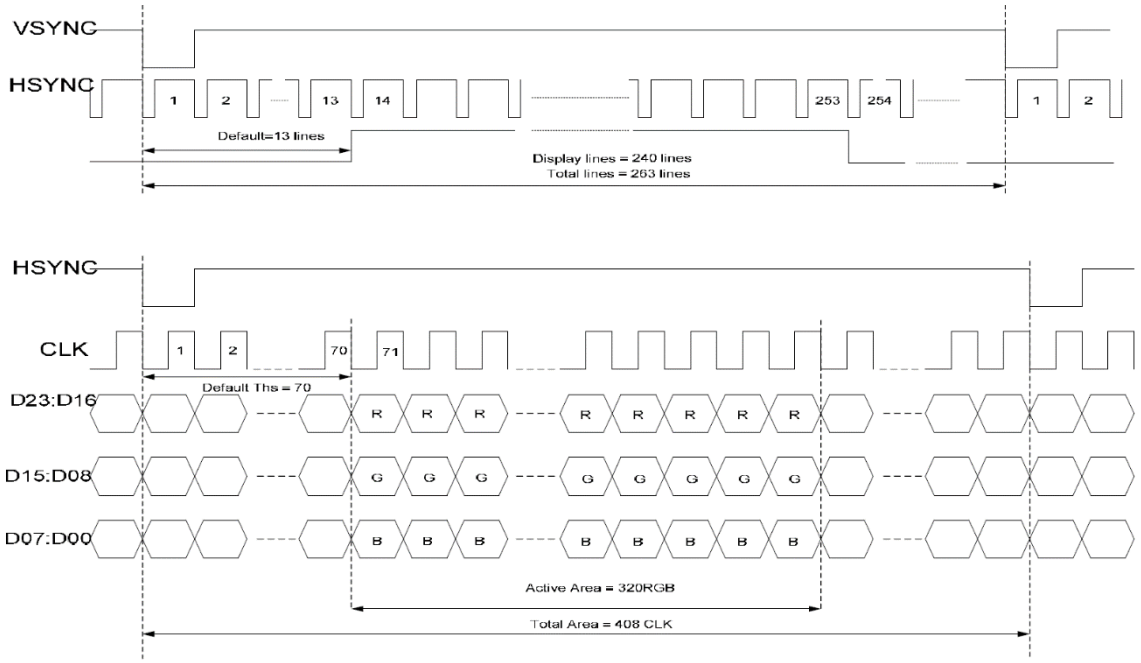

9. TOUCH SCREEN PANEL SPECIFICATIONS

Resistive Touch Panel is directly connected to FT800 module. Therefore communication with Resistive touch panel is simplified to read registers of FT800.

Figure 13. Resistive Touch Panel Connection

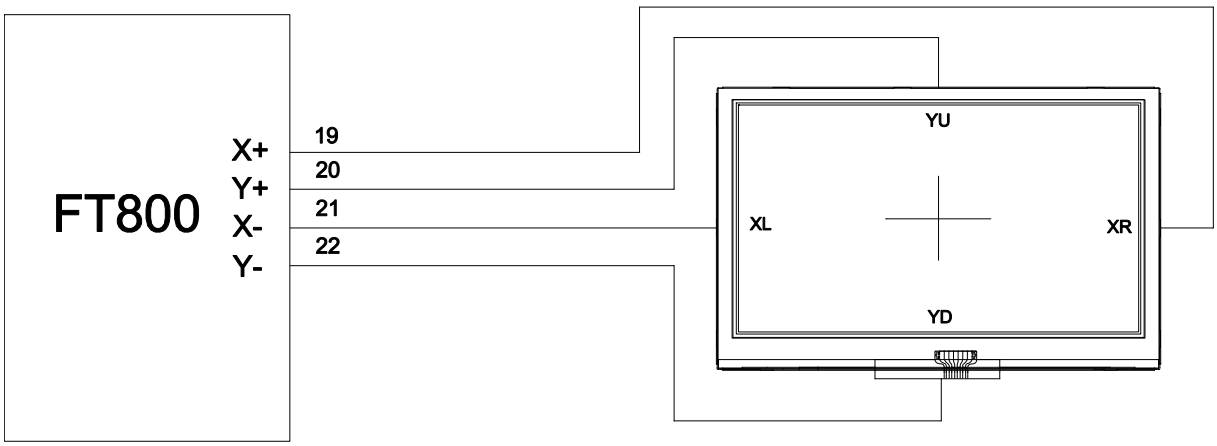

9.1. Electrical characteristics

ITEM	VALUE			UNIT	REMARK
	Min.	Typ.	Max.		
Linearity	-	-	1.5	%	Analog X and Y directions
Terminal Resistance	200	-	900	Ω	X
	100	-	600	Ω	Y
Insulation Resistance	20	-	-	MΩ	DC 25V
Voltage	-	-	10	V	DC
Chattering	-	-	10	ms	100kΩ pull-up
Transparency	78	-	-	%	

Note: Avoid operating with hard or sharp material such as a ball point pen or a mechanical pencil except a polyacetal pen (tip R0.8mm or less) or a finger.

9.2. Mechanical & Reliability characteristics

ITEM	VALUE			UNIT	REMARK
	Min.	Typ.	Max.		
Activation Force	20	-	100	gf	Note 1
Durability - Surface Scratching	Write 100,000	-	-	characters	Note 2
Durability-Surface Pitting	1,000,000	-	-	touches	Note 3
Surface Hardness	3	-	-	H	JIS K5400

10. RELIABILITY TEST

NO.	TEST ITEM	TEST CONDITION	INSPECTION AFTER TEST
1	High Temperature Storage	80±2°C/240 hours	Inspection after 2~4 hours storage at room temperature, the sample shall be free from defects: 1. Air bubble in the LCD 2. Seal leak 3. Non-display 4. Missing segments 5. Glass crack 6. Current I_{dd} is twice higher than initial value 7. The surface shall be free from damage 8. Linearity must be no more than 1.5% by the linearity tester 9. The Electric characteristics requirements shall be satisfied
2	Low Temperature Storage	-30±2°C/240 hours	
3	High Temperature Operating	70±2°C/240 hours	
4	Low Temperature Operating	-20±2°C/240 hours	
5	Temperature Cycle	-30±2°C~25~70±2°C × 30 cycles	
6	Damp Proof Test	60°C ±5°C × 90%RH/160 hours	
7	Vibration Test	Frequency 10Hz~55Hz Stroke: 1.5mm Sweep: 10Hz~55Hz~10Hz 2 hours For each direction of X, Y, Z (6 hours for total)	
8	Mechanical Shock	60G 6ms, ± X, ± Y, ± Z 3 times for each direction	
9	Packing Drop Test	Height: 80 cm 1 corner, 3 edges, 6 surfaces	
10	Package Vibration Test	Random vibration: $0.015G^2$/Hz from 5-200Hz -6dB/Octave from 200-500Hz 2 hours for each direction of X, Y, Z (6 hours for total)	
11	Electrostatic Discharge	Air: ±8KV 150pF/330Ω 5 times Contact: ±4KV 150pF/330Ω 5 times	
12	Hitting Test	1,000,000 times in the same point Hitting pad: tip R3.75mm, Silicone rubber, Hardness: 40deg. Load: 2.45N Hitting speed: Twice/sec Electric load: none Test area should be at 1.8mm inside of insulation.	
13	Pen Sliding Durability	100,000 times minimum	

	Test	Hitting pad: tip R0.8mm plastic pen Load: 1.47N Sliding speed: 60 mm/sec Electric load: none Test area should be at 1.8mm inside of insulation.	

Remark:
1. The test samples should be applied to only one test item.
2. Sample size for each test item is 5~10pcs.
3. For Damp Proof Test, Pure water(Resistance 10MΩ) should be used.
4. In case of malfunction defect caused by ESD damage, if it would be recovered to normal state after resetting, it would be judge as a good part.
5. EL evaluation should be excepted from reliability test with humidity and temperature: Some defects such as black spot/blemish can happen by natural chemical reaction with humidity and Fluorescence EL has.
6. Failure Judgment Criterion: Basic Specification, Electrical Characteristic, Mechanical Characteristic, Optical Characteristic.

Riverdi
our pixels behave