Interactive Catalog Supplements Catalog PDFs

If you need detailed product information, or help choosing the right product for your application, see our Interactive Catalog. Use the Interactive Catalog to access the most complete and up-to-date information available.

The Interactive Catalog provides an extensive collection of product specifications, application data, and technical literature that can be searched based on criteria you select.

This PDF catalog information was published in November 2000.

CHECK THIS OUT!

Sensing and Control
Interactive
Catalog...

Click this icon to try the Interactive Catalog.

Sensing and Control
Honeywell Inc.
11 West Spring Street
Freeport, IL 61032

www.honeywell.com/sensing

sales@prom-elec.com / ООО ПРОМЭЛЕКТРОНИКА

Limit and Enclosed Switches

Miniature Pre-Wired Enclosed Switches

FEATURES

- Miniature size
- Wide selection of actuators
- Precision characteristics
- Zinc die cast housing
- Optional mounting bracket
- Fluorocarbon seal available
- Preleaded or connector versions
- Temperature range 35° to 160°F (2° to 71°C)
- UL Recognized, file #E41859
- CSA Certified, file #LR15775
- CE Certified
- Low temp. versions available (-40 °C & °F)

NOTE: Bushing seal shown refers to ''K'' roller plunger and cross-roller plunger listings only.

Factory pre-wiring with industrial quality cable (type SJTO) allows for miniaturization of the connection and eliminates the need to wire at the switch. This allows the 9 14CE to be used in limited access areas.

The cable electrical connection and basic switch terminals are encapsulated in an epoxy compound. An elastomer seal between the plunger and switch housing, plus mounting screw holes with continuous walls, keep liquids from entering the switch cavity. The seal boot offered on the 9 14CE18 and 9 14CE20 prevents contaminants from impeding plunger movement.

A full range of actuators is available, including plain plungers, roller plungers, side rotary, multi-directional wire, and manual. Any of the LS or HDLS limit switch levers may be used with the side rotary 9 14CE16. Pages A37 & A39.

914CE's may be specified with 3-foot (0,9 m), 6-foot (1,83 m), or 9-foot (2,74 m) cable.

A 90° steel bracket (Catalog Listing 933PA 1) is available for mounting a switch in various planes relative to the mounting surface. See page A92.

ELECTRICAL RATING

Circuitry		Load	Amps Make	Amps Break
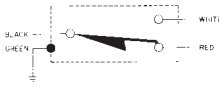 Single-pole Double-throw	A	240 VAC, ind. 240 VAC, res. 28 VDC, res. 28 VDC, ind. UL/CSA: 5 amps, 1/10 Hp, 125 or 250 VAC	1.2 5 3 3	0.2 5 3 3
	B	1 amp res., 0.5 amp ind., 30 VDC UL Rating: 1 amp, 125 VAC		
	C	UL/CSA Rating 3 amp, 125 or 250 VAC		

CABLE TERMINATION

Side Exit

GANG MOUNT TO BUILD MULTIPLE-PLUNGER SWITCH

.63 in. (16mm) between plungers.

Bottom Exit

ORDER GUIDE

Description (Bottom exit cable unless otherwise noted)	Catalog Listing*	NEMA	Elec. Rating	O.F. max. N lbs.	P.T. max. mm in.	O.T. min. mm in.	D.T. max. mm in.
Plunger[1]	**914CE1-3**	1,3	A	12,2 2.75	1,8 .071	3,0 .118	0,1 .004
Plunger[1] Gold Contacts	914CE1-3G	1,3	B	12,2 2.75	1,8 .071	3,0 .118	0,1 .004
Plunger[1] (Side exit cable)	**914CE1-3A**	1,3	A	12,2 2.75	1,8 .071	3,0 .118	0,1 .004
Bushing mount Plunger[2]	914CE27-3	1,3	A	12,2 2.75	1,8 .071	3,0 .118	0,1 .004
Adjustable Plunger[3]	**914CE19-3**	1,3,4 12,13	A	22,2 5	1,8 .071	3,0 .118	0,1 .004
Boot sealed Plunger[4]	**914CE18-3**	1,3,4 12,13	A	22,3 5	1,8 .071	3,0 .118	0,1 .004
Side exit cable	914CE18-3A	1,3,4 12,13	A	22,3 5	1,8 .071	3,0 .118	0,1 .004
Fluorocarbon Seals	914CE18-3V						

N = Newtons

Characteristics: O.F. – Operating Force; P.T. – Pretravel; O.T. – Overtravel; D.T. – Differential Travel.

* These listings have 0,9 1m (3 ft.) cable. To order 1,83m (6 ft.) cable, change the – 3 to – 6. To order 2,74m (9 ft.) cable, change the – 3 to – 9.

PLUNGER ACTUATED SWITCHES

1

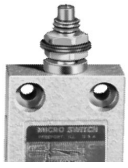

2

3

4

For rapid response – off the shelf service, all **bold face** listings are normally stocked items.

Limit/Enclosed

Miniature Pre-Wired Enclosed Switches

ROLLER PLUNGER ACTUATED SWITCHES

1 2

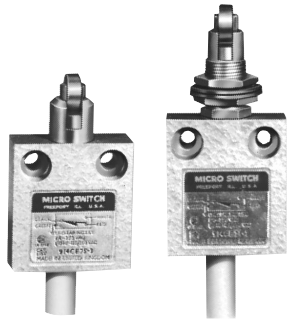

3 4

5 6

NOTE:
Switches held depressed for extended periods of time at temperature extremes may experience retarded plunger return upon deactuation. Where such a condition exists in the application, contact the 800 number.

ORDER GUIDE

Description** (Bottom exit cable unless otherwise noted.)	**Catalog Listing**	**NEMA**	**Elec. Rating**	**O.F. max. N lbs.**	**P.T. max. mm in.**	**O.T. min. mm in.**	**D.T. max. mm in.**
Roller Plunger[1]	**914CE2-3**	1,3	A	12,2 2.75	1,8 .071	3,0 .118	0,1 .004
	914CE2-3K	1,3,4,6 6P,12,13	A	22,3 5	1,8 .071	3,0 .118	0,1 .004
	914CE2-3C	1,3	A SPDTDB	17,8 4	1,8 .071	3,0 .118	0,51 .020
Roller Plunger[1] Gold Contacts	**914CE2-3G**	1,3	B	12,2 2.75	1,8 .071	3,0 .118	0,1 .004
Roller Plunger[1] (Side exit cable	**914CE2-3A**	1,3	A	12,2 2.75	1,8 .071	3,0 .118	0,1 .004
	914CE2-3AK	1,3,4,6 6P,12,13	A	22,3 5	1,8 .071	3,0 .118	0,1 .004
Bushing Mount Roller Plunger[2]	**914CE28-3**	1,3	A	12,2 2.75	1,8 .071	3,0 .118	0,1 .004
Cross Roller Plunger[3]	**914CE3-3**	1,3	A	12,2 2.75	1,8 .071	3,0 .118	0,1 .004
	914CE3-3K	1,3,4,6 6P,12,13	A	22,3 5	1,8 .071	3,0 .118	0,1 .004
Cross Roller Plunger[3] Gold Contacts	914CE3-3G	1,3	B	12,2 2.75	1,8 .071	3,0 .118	0,1 .004
Cross Roller Plunger[3] (Side exit cable).	914CE3-3A 914CE3-3AK	1,3 1,3,4,6 6P,12,13	A A	12,2 2.75 22,3 5	1,8 .071 1,8 .071	3,0 .118 3,0 .118	0,1 .004 0,1 .004
Bushing Mount Cross-Roller Plunger[4]	**914CE29-3**	1,3	A	12,2 2.75	1,8 .071	3,0 .118	0,1 .004
Boot Sealed Roller Plunger[5] Fluorocarbon Seals	914CE31-3 914CE31-3V	1,3,4,6 6P,12,13	A	22,3 5	1,8 .071	3,0 .118	0,1 .004
Boot Sealed Cross Roller Plunger	914CE55-3	1,3,4,6 6P,12,13	A	22,3 5	1,8 .071	3,0 .118	0,1 .004
Ball Bearing[6]	914CE66-3	1,3	A	12,2 2.75	1,8 .071	3,0 .118	0,1 .004

SIDE ROTARY AND WOBBLE ACTUATED SWITCHES

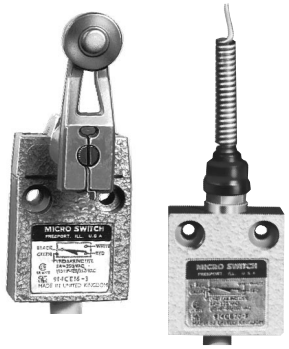

5 6

ORDER GUIDE

Lever not **included on side rotary versions. Any LS or HDLS lever may be used. See pages A37 to A39.**

Description (Bottom exit)	**Catalog Listing**	**NEMA**	**Elec. Rating**	**O.F. max.**	**P.T. max.**	**O.T. min.**	**D.T. max.**
Side*** rotary[5]	**914CE16-3**	1,3,4,6 6P,12,13	A	0,34 Nm 3 in. lbs.	30°	40°	3°
Side rotary[5] Side exit cable	914CE16-3A	1,3,4,6 6P,12,13	A	0,34 Nm 3 in. lbs.	30°	40°	3°
Multidirectional spring wire wobble actuator[6]	**914CE20-3**	1,3,4,6 6P,12,13	A	0,56 N 2 oz.	—	—	—
	9PA86-CE	Replacement Actuator					

N = Newtons
* These listings have 0,91m (3 ft.) cable. To order 1,83m (6 ft.) cable, change the –3 to –6. For other cable lengths, contact the 800 number.
** Snap release not recommended on these devices.
*** Switch operates on clockwise and counterclockwise rotation of the lever shaft.
Characteristics: O.F. – Operate Force; P.T. – Pretravel; O.T. – Overtravel; D.T. – Differential Travel

Limit and Enclosed Switches

Miniature Pre-Wired Enclosed Switches

MANUALLY OPERATED SWITCHES

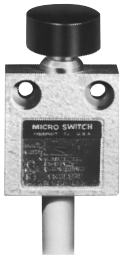

ORDER GUIDE

Description (Bottom exit cable)	Catalog Listing*	NEMA	Elec. Rating	O.F. max. N lbs.	P.T. max. mm in.	O.T. min. mm in.	D.T. max. mm in.
.94 in. (23,9mm) dia. button	**914CE22-3**	1,3	A	8,9 2	1,8 .071	3,0 .118	0,1 .004

N = Newtons
*These listings have 0,91m (3 ft.) cable. To order 1,83m (6 ft.) cable, change the –3 to –6. For other cable lengths, contact the 800 number.
Characteristics: O.F. – Operate Force; P.T. – Pretravel; O.T. – Overtravel; D.T. – Differential Travel

MINIATURE ENCLOSED SWITCHES WITH CONNECTORS

ORDER GUIDE WITH AC STYLE CONNECTORS

Description	Connector Exit	Catalog Listing	NEMA	Elec. Rating	O.F. max. N lbs.	P.T. max. mm in.	O.T. min. mm in.	D.T. max. mm in.
Plunger	Bottom	**914CE1-Q1**	1, 3	C	12,2 2.75	1,8 .071	3,0 .118	0,1 .004
Boot sealed plunger	Bottom	914CE18-Q1	1, 3, 4, 6	C	22,3	1,8	3,0	0,1
	Side	914CE18-AQ1	12, 13		5	.071	.118	.004
Roller plunger	Bottom	914CE2-Q1	1, 3	C	12,2	1,8	3,0	0,1
	Bottom	914CE2-KQ1	1, 3, 4, 6, 12, 13		2.75	.071	.118	.004
Cross roller plunger	Bottom	914CE3-Q1	1, 3	C	12,2	1,8	3,0	0,1
	Bottom	914CE3-KQ1	1, 3, 4, 6, 12, 13		2.75	.071	.118	.004
Side rotary (w/o lever)	Bottom	914CE16-Q1	1, 3, 4, 6	C	0,34 Nm	30°	40°	3°
	Side	914CE16-AQ1	12, 13		3 in. lb.			
Bushing mount Roller plunger	Bottom	914CE28-Q1	1, 3	C	12,2 2.75	1,8 .071	3,0 .118	0,1 .004

For DC style connectors, delete the "1" at the end of the catalog listing. Example: 914CE1-Q1 (AC); 914CE1-Q (DC).

MOUNTING DIMENSIONS
PLAIN PLUNGER/RECEPTACLE

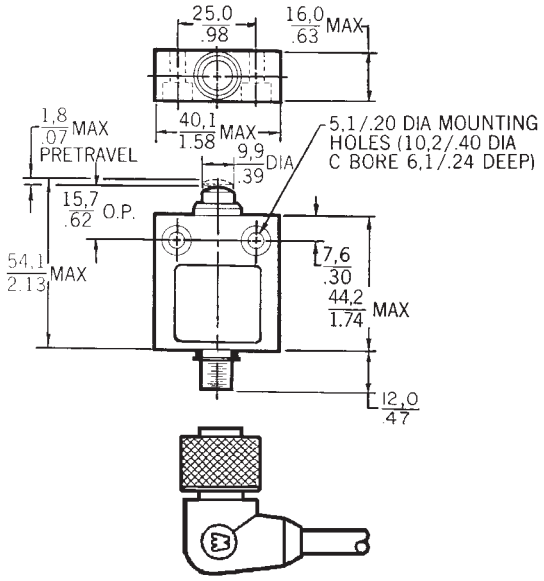

Bottom Exit Connector

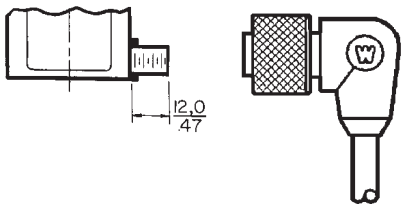

Side Exit Connector

Miniature pre-wired enclosed switches

QUICK-CONNECT CABLES

914CE switches mate with the quick-connect cables listed below. The cable has PVC sheathing and #22 AWG leadwires.

MOUNTING DIMENSIONS

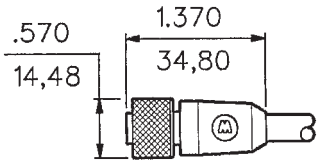

Straight Style Connector

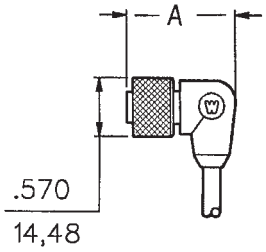

Right Angle (90°) Style Connector

Dimension "A"
DC Style – 1.050 (26,7)

AC Style Pin Configuration (male receptacle)

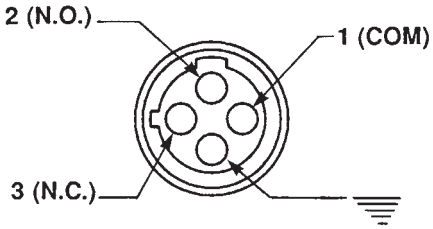

Pin Layout

No Cable Available For AC Style Connectors

DC STYLE CABLES

Connector Style	Cable Length	Catalog Listing
Straight	2 M	804000A09M020
	5 M	804000A09M050
Right angle (90°)	2 M	804001A09M020
	5 M	804001A09M050

DC Style Pin Configuration (male receptacle)

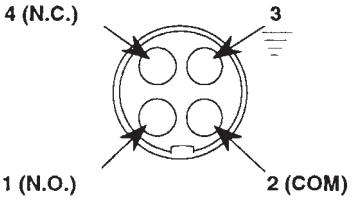

PIn Layout

DC Style Pin Configuration (cable plug)
(Face view of female connector)

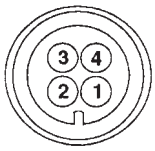

Pin #1 = Brown leadwire/Normally opened
Pin #2 = White leadwire/Common
Pin #3 = Blue leadwire/Ground
Pin #4 = Black leadwire/Normally closed

Mounting Dimensions

PLUNGER/CABLE

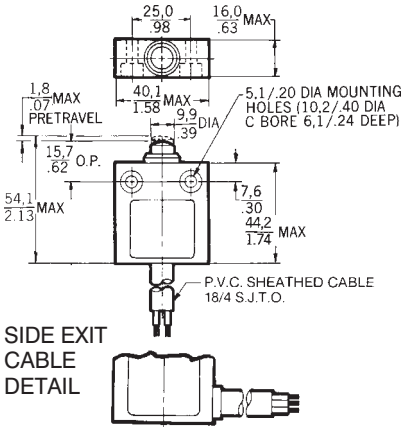

PLUNGER (With seal boot)

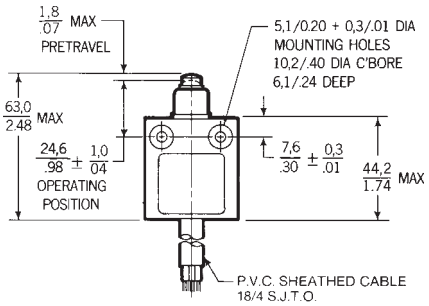

ADJUSTABLE PLUNGER

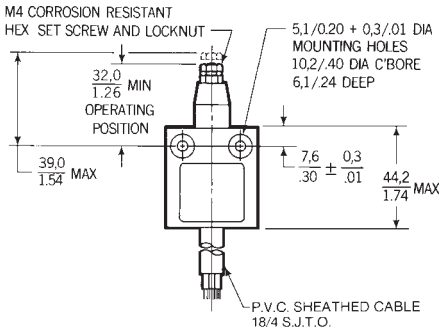

PLUNGER (Bushing mount)

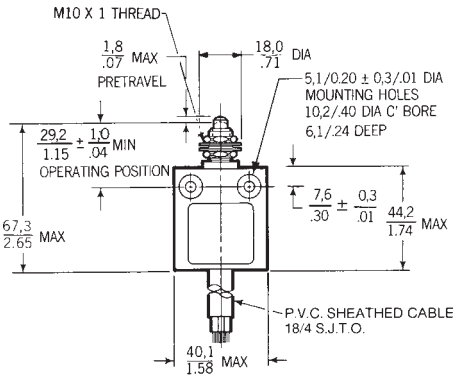

ROLLER PLUNGER (Bushing mount)

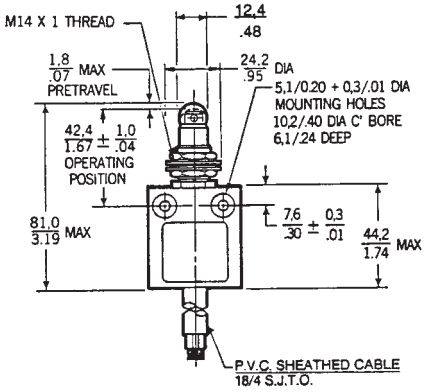

ROLLER PLUNGER

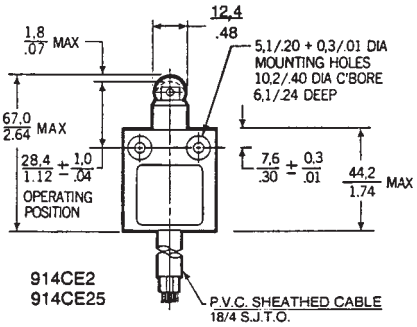

MANUAL OPERATOR

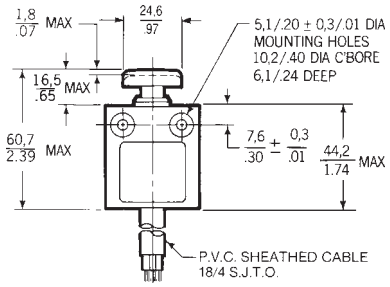

CROSS ROLLER PLUNGER

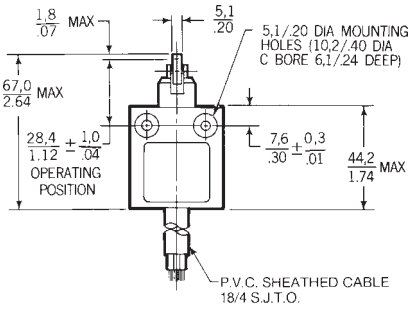

MULTIDIRECTIONAL WIRE

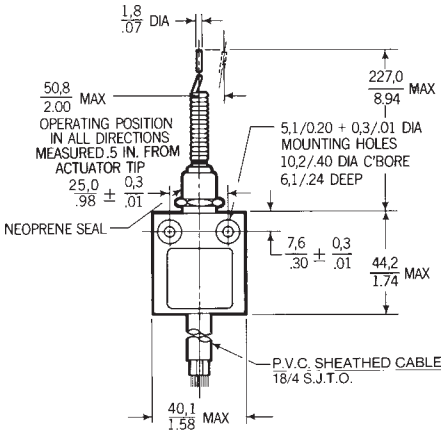

Mounting Dimensions

CROSS ROLLER PLUNGER (Bushing mount)

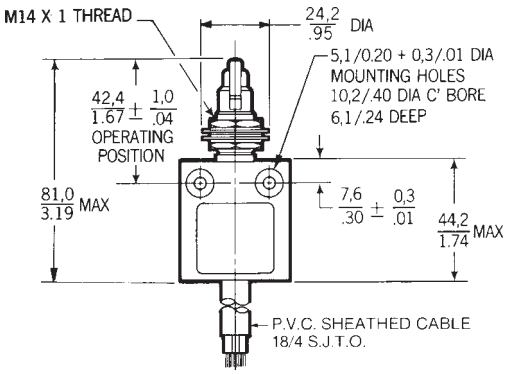

SIDE ROTARY*

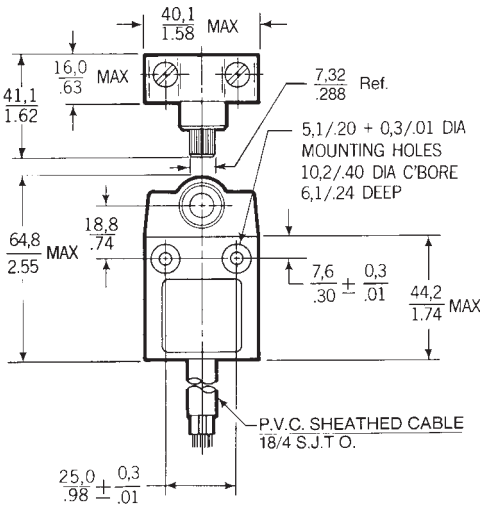

* Any LS or HDLS limit switch lever can be used with this switch.

BOOT SEALED ROLLER PLUNGER

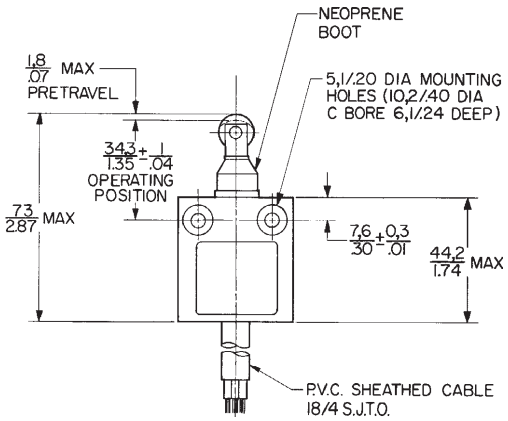

MOUNTS THRU .517/13,13 DIA. HOLE IN PANEL .165/4,19 MAX. THICK

BALL BEARING

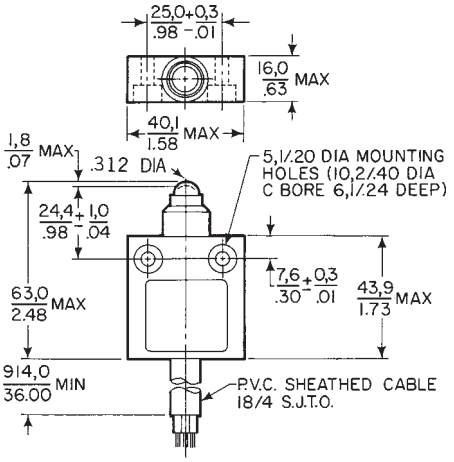

MOUNTING BRACKET
933PA1

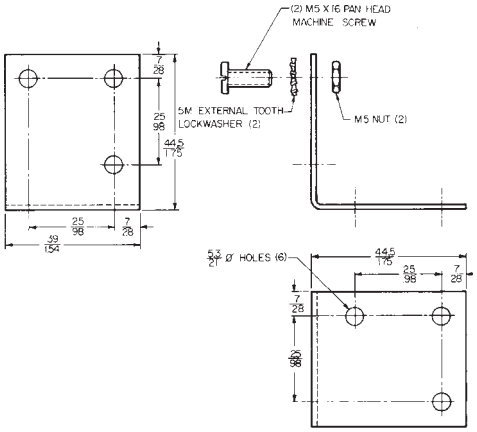

BOOT SEALED CROSS ROLLER PLUNGER

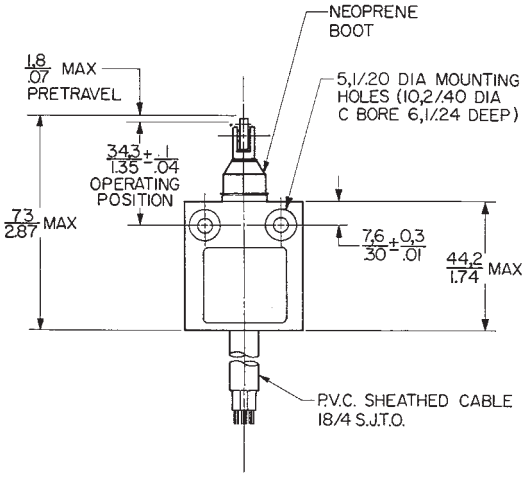

Key: 0,0 = mm / 0.00 = inches