LCD TFT Module Specification

Riverdi
our pixels behave

RVT4.3A480272TFWR00

LCD TFT Datasheet

Rev.2.0.0

2017-05-25

ITEM	CONTENTS	UNIT
LCD Type	TFT/Transmissive/Normally white	/
Size	4.3	Inch
Viewing Direction	12:00 (without image inversion)	O' Clock
Gray Scale Inversion Direction	6:00	O' Clock
LCM (W × H × D)	106.30 x 67.20 x 4.7	mm^3
Active Area (W × H)	95.04 × 53.86	mm^2
Dot Pitch (W × H)	0.066 × 0.198	mm^2
Number Of Dots	480 (RGB) × 272	/
Driver IC	HX8257A	/
Backlight Type	10 LEDs	/
Surface Luminance	440	cd/m^2
Interface Type	24bit RGB	/
Color Depth	16.7M	/
Pixel Arrangement	RGB Vertical Stripe	/
Surface Treatment	Anti-glare	
Input Voltage	3.3	V
With/Without TSP	Resistive Touch Panel	/
Weight	78	g

Note 1: RoHS compliant

Note 2: LCM weight tolerance: ± 5%.

sales@prom-elec.com / ООО ПРОМЭЛЕКТРОНИКА

REVISION RECORD

REVNO.	REVDATE	CONTENTS	REMARKS
1.0	2014-05-16	Initial Release	
1.1	2014-11-24		
1.2	2014-12-04	Add HVDSL pin information	
1.3	2015-01-19	Update module thickness, update LED lifetime	
1.4	2015-02-06	Update dimensions information on mechanical drawing	
1.5	2015-02-24	Update Color Depth	
1.6	2015-04-16	Update Interface Description	
1.7	2015-05-21	Update Mechanical drawing	
1.8	2016-08-12	Added Inspection Standards	
2.0.0	2017-05-25	Glass change, new TFT open dimension, FFC shape, new IC controller and updated pinout	

CONTENTS

REVISION RECORD 2
CONTENTS 2
1 MODULE CLASSIFICATION INFORMATION 3
2 MODULE DRAWING 4
3 ABSOLUTE MAXIMUM RATINGS 5
4 ELECTRICAL CHARACTERISTICS 5
5 BACKLIGHT CHARACTERISTICS 5
6 ELECTRO-OPTICAL CHARACTERISTICS 5
7 INTERFACE DESCRIPTION 7
8 LCD TIMING CHARACTERISTICS 8
8.1 Clock and data input time diagram 8
8.2 Parallel RGB input timing table 8
9 TOUCH SCREEN PANEL SPECIFICATIONS 9
9.1 Electrical characteristics 9
9.2 Mechanical characteristics 9
10 INSPECTION 10
10.1 Inspection condition 10
10.2 Inspection standard 11
11 RELIABILITY TEST 13
12 LEGAL INFORMATION 14

1 MODULE CLASSIFICATION INFORMATION

RV	T	4.3	A	480272	T	F	W	R	00
1.	2.	3.	4.	5.	6.	7.	8.	9.	10.

1.	**BRAND**	**RV** – Riverdi
2.	**PRODUCT TYPE**	**T – TFT Standard** **F** – TFT Custom
3.	**DISPLAY SIZE**	**3.5** – 3.5” **4.3 – 4.3”** **5.7** – 5.7” **7.0** – 7.0”
4.	**MODEL SERIAL NO.**	**A (A-Z)**
5.	**RESOLUTION**	**320240** – 320x240 px **480272 – 480x272 px** **800480** – 800x480 px
6.	**INTERFACE**	**T – TFT LCD, RGB** **L** – TFT LCD, LVDS **C –** TFT + Controller
7.	**FRAME**	**N** – No Frame **F – Mounting Frame**
8.	**BACKLIGHT TYPE**	**W – LED White**
9.	**TOUCH PANEL**	**N** – No Touch Panel **R – Resistive Touch Panel** **C –** Capacitive Touch Panel
10.	**VERSION**	**00** (00-99)

TFT PINOUT	
PIN	DESC
1	VLED-
2	VLED+
3	GND
4	VDD
5	R0
6	R1
7	R2
8	R3
9	R4
10	R5
11	R6
12	R7
13	G0
14	G1
15	G2
16	G3
17	G4
18	G5
19	G6
20	G7
21	B0
22	B1
23	B2
24	B3
25	B4
26	B5
27	B6
28	B7
29	GND
30	DCLK
31	DISP
32	HSYNC
33	VSYNC
34	DE
35	NC
36	GND
37	XR
38	YD
39	XL
40	YU

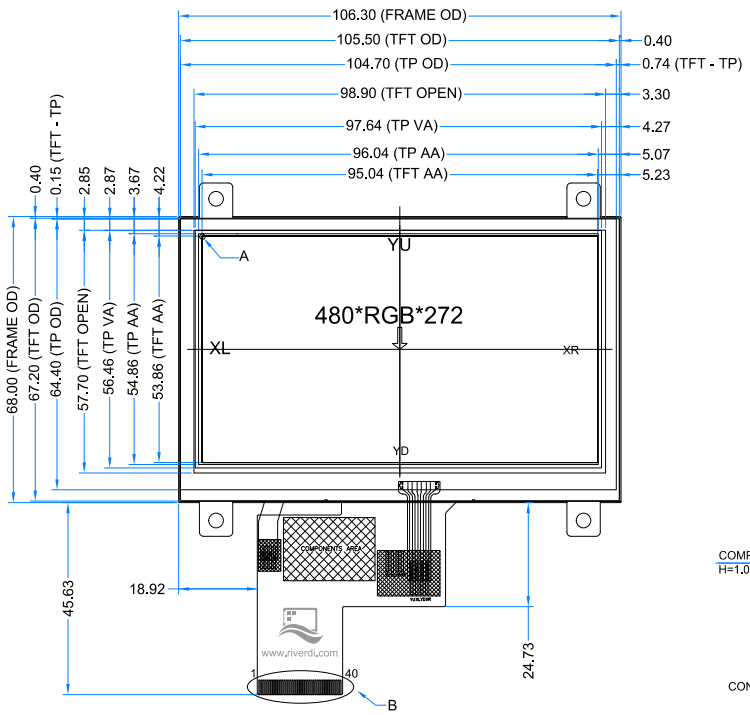

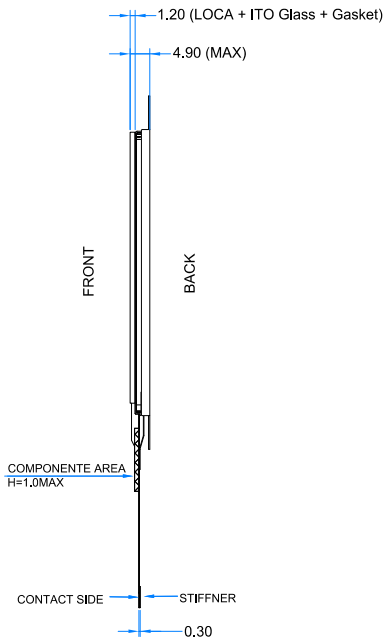

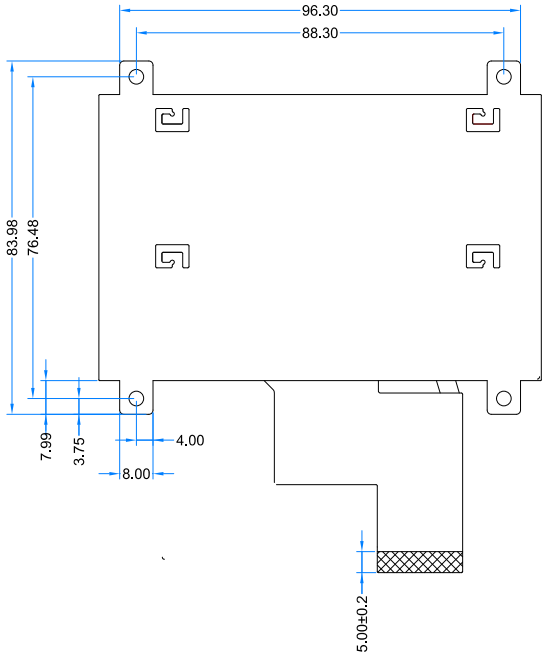

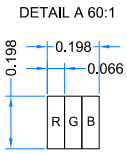

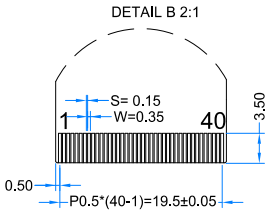

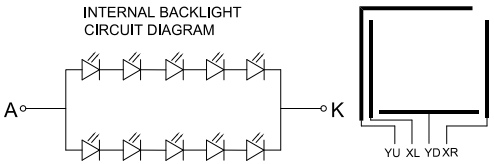

TP LOGIC DIAGRAM

NOTES:
1. DISPLAY TYPE: TFT, TRANSMISSIVE, NORMALLY WHITE
2. OPERATION VOLTAGE: VDD=3.3V
3. VIEWING DIRECTION: 12 O'CLOCK
4. IC CONTROLLER: HX8257A
5. OPERATING TEMP.: -20°C ~ 70°C
6. STORAGE TEMP.: -30°C ~ 80°C
7. LED BACKLIGHT: 10-LED WHITE
8. SURFACE LUMINANCE: 440 cd/m^2
9. GENERAL TOLERANCE: ±0.2
10. RoHS COMPLIANT

Ver.	DESCRIPTION	DATE
2.0.0	Glass change, New TFT open dimension, FFC shape. New IC controller and updated pinout.	2017.05.29

CUSTOMER APVL		DATE	2017/05/29
DRAWN	SCALE	TITLE	RVT4.3A480272TFWR00
DFTG CHK	UNIT mm		
ENGR CHK		MODEL	RGB module with RTP
APPROVAL			
RIVERDI SP. Z O.O.		DWG NO Rev.2.0.0	PAGE 1/1

3 ABSOLUTE MAXIMUM RATINGS

PARAMETER	SYMBOL	MIN	MAX	UNIT
Supply Voltage For Logic	VDD	-0.3	4.5	V
Input Voltage For Logic	VIN	VSS-0.5	VDD	V
LED forward current (each LED)	IF	-	25	mA
Operating Temperature	T_{OP}	-20	70	°C
Storage Temperature	T_{ST}	-30	80	°C
Humidity	RH	-	90% (Max 60°C)	RH

4 ELECTRICAL CHARACTERISTICS

PARAMETER	SYMBOL	MIN	TYP	MAX	UNIT	NOTES
Supply Voltage For Module	VDD	3.0	3.3	3.6	V	
Input Current	IDD	-	19.5	TBD	mA	VDD = 3.3V
Input Voltage ' H ' level	V_{IH}	0.7VDD	-	VDD	V	
Input Voltage ' L ' level	V_{IL}	VSS	-	0.3VDD	V	

Note 1: The LED life time is defined as the module brightness decrease to 50% original brightness at Ta=25°C.

5 BACKLIGHT CHARACTERISTICS

ITEM	SYMBOL	MIN	TYP	MAX	UNIT
Voltage for LED backlight	V_I	15.0	16.0	17.0	V
Current for LED backlight	I_I	-	40	50	mA
LED Life Time	-	30000	50000	-	Hrs

Note: The LED life time is defined as the module brightness decrease to 50% original brightness at Ta=25°C.

6 ELECTRO-OPTICAL CHARACTERISTICS

ITEM		SYMBOL	CONDITION	MIN	TYP	MAX	UNIT	REMARK	NOTE
Response Time		Tr+Tf	θ=0° Ø=0° Ta=25	-	20	30	ms	Figure 1	4
Contrast Ratio		Cr		320	400	-	---	Figure 2	1
Luminance Uniformity		δ WHITE		80	-	-	%	Figure 2	3
Surface Luminance		Lv		350	440	-	cd/m²	Figure 2	2
Viewing Angle Range		θ	Ø = 90°	35	50	-	deg	Figure 3	6
			Ø = 270°	55	70	-	deg	Figure 3	
			Ø = 0°	55	70	-	Deg	Figure 3	
			Ø = 180°	55	70	-	Deg	Figure 3	
CIE (x, y) Chromaticity	Red	x	θ=0° Ø=0° Ta=25	0.570	0.620	0.670	Figure 2		5
		y		0.294	0.344	0.394			
	Green	x		0.256	0.306	0.356			
		y		0.513	0.563	0.613			
	Blue	x		0.083	0.149	0.199			
		y		0.099	0.149	0.199			
	White	x		0.250	0.300	0.350			
		y		0.280	0.330	0.380			

Note 1. Contrast Ratio(CR) is defined mathematically as below, for more information see Figure 1.

$$\text{Contrast Ratio} = \frac{\text{Average Surface Luminance with all white pixels (P1, P2, P3, P4, P5)}}{\text{Average Surface Luminance with all black pixels (P1, P2, P3, P4, P5)}}$$

Note 2. Surface luminance is the LCD surface from the surface with all pixels displaying white. For more information see Figure 2.

Lv = Average Surface Luminance with all white pixels (P1, P2, P3, P4, P5)

Note 3. The uniformity in surface luminance δ WHITE is determined by measuring luminance at each test position 1 through 5, and then dividing the maximum luminance of 5 points luminance by minimum luminance of 5 points luminance. For more information see Figure 2.

$$\delta\ \text{WHITE} = \frac{\text{Minimum Surface Luminance with all white pixels (P1, P2, P3, P4, P5)}}{\text{Maximum Surface Luminance with all white pixels (P1, P2, P3, P4, P5)}}$$

Note 4. Response time is the time required for the display to transition from white to black (Rise Time, Tr) and from black to white (Decay Time, Tf). For additional information see FIG 1. The test equipment is Autronic-Melchers's ConoScope series.

Note 5. CIE (x, y) chromaticity, the x, y value is determined by measuring luminance at each test position 1 through 5, and then make average value.

Note 6. Viewing angle is the angle at which the contrast ratio is greater than 2. For TFT module the contrast ratio is greater than 10. The angles are determined for the horizontal or x axis and the vertical or y axis with respect to the z axis which is normal to the LCD surface. For more information see Figure 3.

Note 7. For viewing angle and response time testing, the testing data is based on Autronic-Melchers's ConoScope series. Instruments for Contrast Ratio, Surface Luminance, Luminance Uniformity, CIE the test data is based on TOPCON's BM-5 photo detector.

Figure 1. The definition of response time

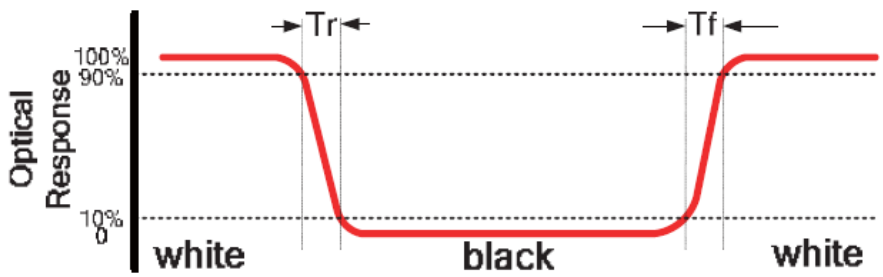

Figure 2. Measuring method for Contrast ratio, surface luminance, Luminance uniformity, CIE (x, y) chromaticity

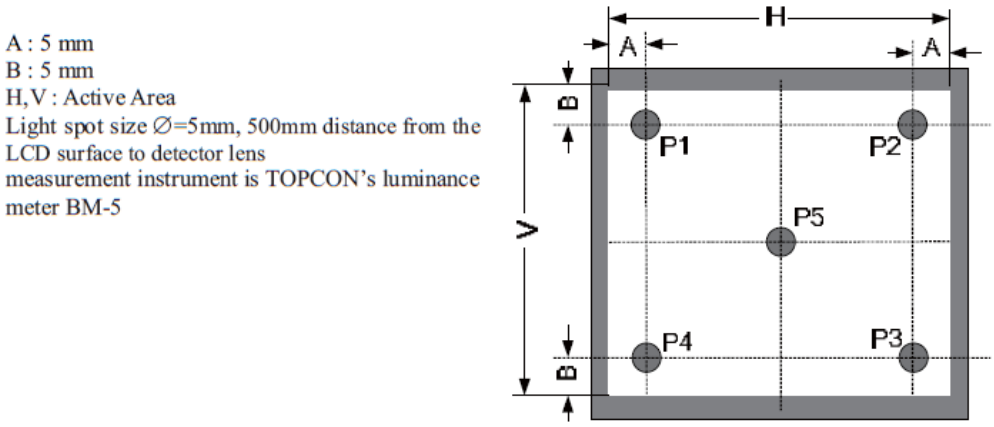

Figure 3.The definition of viewing angle

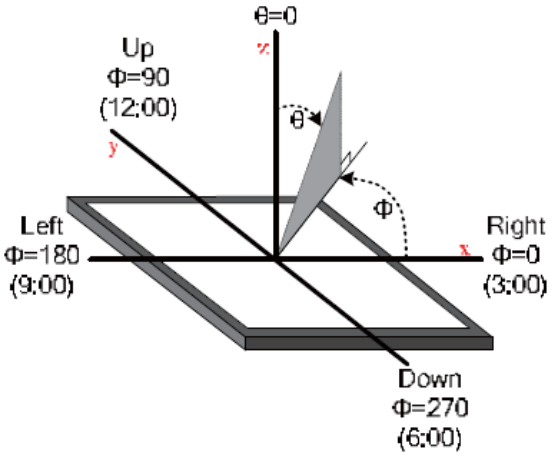

7 INTERFACE DESCRIPTION

PIN NO.	SYMBOL	DESCRIPTION	NOTE
1	VLED-	Cathode Of LED Backlight	
2	VLED+	Anode Of LED Backlight	
3	GND	Power Ground	
4	VDD	Power Voltage	
5-12	R0-R7	Red Data (R0-LSB, R7-MSB)	
13-20	G0-G7	Green Data (G0-LSB, G7-MSB)	
21-28	B0-B7	Blue Data (B0-LSB, B7-MSB)	
29	GND	Power Ground	
30	DCLK	Pixel Clock	
31	DISP	Display On/Off	
32	HSYNC	Horizontal Sync Signal	
33	VSYNC	Vertical Sync Signal	
34	DE	Data Enable	
35	NC	No Connect	
36	GND	Power Ground	
37	XR	Touch Right Electrode	
38	YD	Touch Down Electrode	
39	XL	Touch Left Electrode	
40	YU	Touch Up Electrode	

Note 1: Displays marked with „rev.2.0” printing, have the ability to select the operating mode: HV mode or DE mode.
HVDSL=”H”: Set under HV mode, VSD and HSD signal have to provide by system.
HVDSL=”L”: Set under DE mode, DE signal have to provide by system.
By default: Internal pulled weak low.

8 LCD TIMING CHARACTERISTICS

8.1 Clock and data input time diagram

Figure 4. Clock and data input time diagram

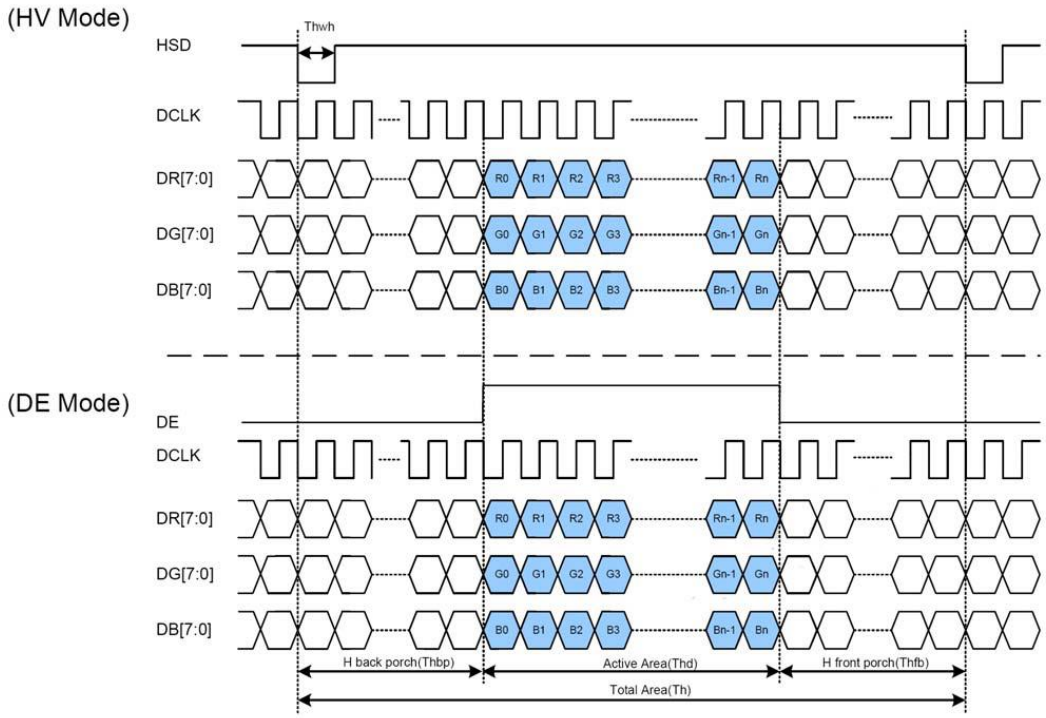

8.2 Parallel RGB input timing table

PARAMETER	SYMBOL	MIN	TYP	MAX	UNIT
DCLK Frequency	Fclk	5	9	12	MHz
VSD Period Time	Tv	277	288	400	H
VSD Display Area	Tvd		272		H
VSD Back Porch	Tvb	3	8	31	H
VSD Front Porch	Tvfp	2	8	97	H
HSD Period Time	Th	520	525	800	DCLK
HSD Display Area	Thd		480		DCLK
HSD Back Porch	Thbp	36	40	255	DCLK
HSD Front Porch	Thfp	4	5	65	DCLK

9 TOUCH SCREEN PANEL SPECIFICATIONS

9.1 Electrical characteristics

ITEM	VALUE			UNIT	REMARK
	Min.	Typ.	Max.		
Linearity	-3.0	-	3.0	%	Analog X and Y directions
Terminal Resistance	400	-	1050	Ω	X
	100	-	450	Ω	Y
Insulation Resistance	-	-	-	MΩ	DC 25V
Voltage	-	-	10	V	DC
Chattering	-	-	10	ms	100kΩ pull-up
Transparency	80	-	-	%	JIS K7105

Note: Avoid operating with hard or sharp material such as a ball point pen or a mechanical pencil except a polyacetal pen (tip R0.8mm or less) or a finger

9.2 Mechanical characteristics

ITEM	VALUE			UNIT	REMARK
	Min.	Typ.	Max.		
Activation Force	30	-	-	gf	
Durability-Surface Scratching	Write 100,000	-	-	characters	
Durability-Surface Pitting	1,000,000	-	-	touches	
Surface Hardness	3	-	-	H	JIS K5400

10 INSPECTION

Standard acceptance/rejection criteria for TFT module.

10.1 Inspection condition

Ambient conditions:

- Temperature: 25±°C
- Humidity: (60±10)%RH
- Illumination: Single fluorescent lamp non-directive (300 to 700 lux)

Viewing distance:

35±5cm between inspector bare eye and LCD.

Viewing Angle:

U/D: 45°/45°, L/R 45°/45°

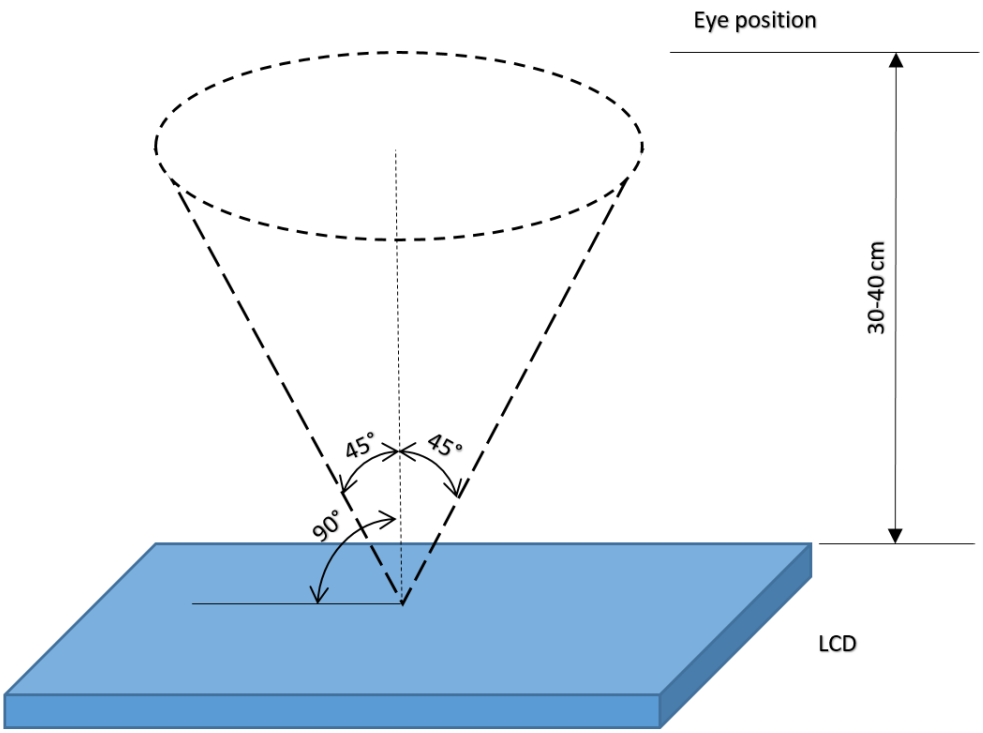

10.2 Inspection standard

<table>
<tr><th>Item</th><th>Criterion</th></tr>
<tr><td>Black spots, white spots, light leakage, Foreign Particle (round Type)</td><td>
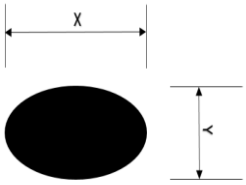

$$D = \frac{(x+y)}{2}$$

*Spots density: 10 mm²

<table>
<tr><th colspan="2">Size < 5”</th></tr>
<tr><td>Average Diameter</td><td>Qualified Qty</td></tr>
<tr><td>D < 0.2 mm</td><td>Ignored</td></tr>
<tr><td>0.2 mm < D < 0.3 mm</td><td>3</td></tr>
<tr><td>0.3 mm < D < 0.5 mm</td><td>2</td></tr>
<tr><td>0.5 mm < D</td><td>0</td></tr>
</table>

<table>
<tr><th colspan="2">Size >= 5”</th></tr>
<tr><td>Average Diameter</td><td>Qualified Qty</td></tr>
<tr><td>D<0.2 mm</td><td>Ignored</td></tr>
<tr><td>0.2 mm < D < 0.3 mm</td><td>4</td></tr>
<tr><td>0.3 mm < D < 0.5 mm</td><td>2</td></tr>
<tr><td>0.5 mm < D</td><td>0</td></tr>
</table>
</td></tr>
<tr><td>LCD black spots, white spots, light leakage (line Type)</td><td>
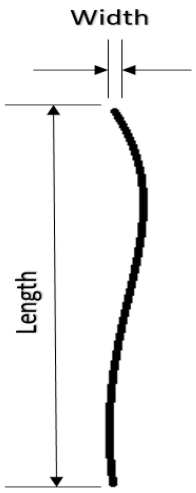

*Spots density: 10 mm²

<table>
<tr><th colspan="3">Size < 5”</th></tr>
<tr><td>Length</td><td>Width</td><td>Qualified Qty</td></tr>
<tr><td>-</td><td>W< 0.02</td><td>Ignored</td></tr>
<tr><td>L < 3.0</td><td>0.02 < W <0.05</td><td rowspan="2">2</td></tr>
<tr><td>L < 2.5</td><td>0.05 < W <0.08</td></tr>
<tr><td>-</td><td>0.08 < W</td><td>0</td></tr>
</table>

<table>
<tr><th colspan="3">Size >= 5”</th></tr>
<tr><td>Length</td><td>Width</td><td>Qualified Qty</td></tr>
<tr><td>-</td><td>W< 0.02</td><td>Ignored</td></tr>
<tr><td>L < 3.0</td><td>0.02 < W <0.05</td><td rowspan="2">4</td></tr>
<tr><td>L < 2.5</td><td>0.05 < W <0.08</td></tr>
<tr><td>-</td><td>0.08 < W</td><td>0</td></tr>
</table>
</td></tr>
</table>

Item	Criterion
Clear spots	

Size < 5”	
Average Diameter	Qualified Qty
D < 0.2 mm	Ignored
0.2 mm < D < 0.3 mm	3
0.3 mm < D < 0.5 mm	2
0.5 mm < D	0

Size >= 5”	
Average Diameter	Qualified Qty
D<0.2 mm	Ignored
0.2 mm < D < 0.3 mm	4
0.3 mm < D < 0.5 mm	2
0.5 mm < D	0

*Spots density: 10 mm

Polarizer bubbles

Size < 5”	
Average Diameter	Qualified Qty
D < 0.2 mm	Ignored
0.2 mm < D < 0.5 mm	3
0.5 mm < D < 1 mm	2
1 mm < D	0
Total Q’ty	3

Size >= 5”	
Average Diameter	Qualified Qty
D<0.25 mm	Ignored
0.25 mm < D < 0.5 mm	3
0.5 mm < D	0

Electrical Dot Defect

Size < 5”	
item	Qualified Qty
Black do defect	4
Bright dot defect	2
Total Dot	5

Size >= 5”	
item	Qualified Qty
Black do defect	5
Bright dot defect	2
Total Dot	5

Item	Criterion

Touch panel spot	

Size < 5”	
Average Diameter	Qualified Qty
D < 0.2 mm	Ignored
0.2 mm < D < 0.4 mm	5
0.4 mm < D < 0.5 mm	2
0.5 mm < D	0

Size >= 5”	
Average Diameter	Qualified Qty
D<0.25 mm	Ignored
0.25 mm < D < 0.5 mm	4
0.5 mm < D	0

Touch panel White line Scratch

Size < 5”		
Length	Width	Qualified Qty
-	W< 0.02	Ignored
L < 3.0	0.02 < W <0.05	2
L < 2.5	0.05 < W <0.08	
-	0.08 < W	0

Size >= 5”		
Length	Width	Qualified Qty
-	W< 0.03	Ignored
L < 5.0	0.03 < W <0.05	2
-	0.05 < W	0

11 RELIABILITY TEST

NO.	TEST ITEM	TEST CONDITION
1	High Temperature Storage	80±2°C/240hours
2	Low Temperature Storage	-30±2°C/240hours
3	High Temperature Operating	70±2°C/240hours
4	Low Temperature Operating	-20±2°C/240hours
5	Temperature Cycle	-30±2°C~25~80±2°C × 20 cycles (30min.) (5min.) (30min.)
6	Damp Proof Test	60°C ±5°C × 90%RH/240hours
7	Vibration Test	Frequency 10Hz~55Hz Amplitude of vibration : 1.5mm Sweep: 10Hz~55Hz~10Hz X, Y, Z 2 hours for each direction.
8	Package Drop Test	Height:60 cm 1 corner,3 edges,6 surfaces
9	ESD Test	Air: ±4KV 150pF/330Ω 5 times Contact: ±2KV 150pF/330Ω 5 time

12 LEGAL INFORMATION

Riverdi makes no warranty, either expressed or implied with respect to any product, and specifically disclaims all other warranties, including, without limitation, warranties for merchantability, non-infringement and fitness for any particular purpose. Information about device are the property of Riverdi and may be the subject of patents pending or granted. It is not allowed to copy or disclosed this document without prior written permission.

Riverdi endeavors to ensure that the all contained information in this document are correct but does not accept liability for any error or omission. Riverdi products are in developing process and published information may be not up to date. Riverdi reserves the right to update and makes changes to Specifications or written material without prior notice at any time. It is important to check the current position with Riverdi.

Images and graphics used in this document are only for illustrative the purpose. All images and graphics are possible to be displayed on the range products of Riverdi, however the quality may vary. Riverdi is no liable to the buyer or to any third part for any indirect, incidental, special, consequential, punitive or exemplary damages (including without limitation lost profits, lost savings, or loss of business opportunity) relating to any product, service provided or to be provided by Riverdi, or the use or inability to use the same, even if Riverdi has been advised of the possibility of such damages.

Riverdi products are not fault tolerant nor designed, manufactured or intended for use or resale as on line control equipment in hazardous environments requiring fail – safe performance, such as in the operation of nuclear facilities, aircraft navigation or communication systems, air traffic control, direct life support machines or weapons systems in which the failure of the product could lead directly to death, personal injury or severe physical or environmental damage (‘High Risk Activities’). Riverdi and its suppliers specifically disclaim any expressed or implied warranty of fitness for High Risk Activities. Using Riverdi products and devices in 'High Risk Activities' and in any other application is entirely at the buyer’s risk, and the buyer agrees to defend, indemnify and hold harmless Riverdi from any and all damages, claims or expenses resulting from such use. No licenses are conveyed, implicitly or otherwise, under any Riverdi intellectual property rights.

Riverdi
our pixels behave