IS34ML01G084
IS35ML01G084

1Gb SLC-4b ECC
3.3V X8 NAND FLASH MEMORY STANDARD NAND INTERFACE

sales@prom-elec.com / ООО ПРОМЭЛЕКТРОНИКА

1Gb(x8) 3.3V NAND FLASH MEMORY with 4b ECC

FEATURES

- **Flexible & Efficient Memory Architecture**
  - Organization: 128Mb x8
    - Memory Cell Array: (128M + 4M) x 8bit
    - Data Register: (2K + 64) x 8bit
    - Page Size: (2K + 64) Byte
    - Block Erase: (128K + 4K) Byte
    - Memory Cell: 1bit/Memory Cell

- **Highest performance**
  - Read Performance
    - Random Read: 25us (Max.)
    - Serial Access: 25ns (Max.)
  - Write Performance
    - Program time: 300us - typical
    - Block Erase time: 3ms – typical

- **Low Power with Wide Temp. Ranges**
  - Single 3.3V (2.7V to 3.6V) Voltage Supply
  - 15 mA Active Read Current
  - 10 µA Standby Current
  - Temp Grades:
    - Industrial: -40°C to +85°C
    - Extended: -40°C to +105°C
    - Automotive, A1: -40°C to +85°C
    - Automotive, A2: -40°C to +105°C

- **Reliable CMOS Floating Gate Technology**
  - ECC Requirement: X8 - **4bit/512Byte**
  - Endurance: 100K Program/Erase cycles
  - Data Retention: 10 years

- **Efficient Read and Program modes**
  - Command/Address/Data Multiplexed I/O Interface
  - Command Register Operation
  - Automatic Page 0 Read at Power-Up Option
    - Boot from NAND support
    - Automatic Memory Download
  - NOP: 4 cycles
  - Cache Program Operation for High Performance Program
  - Cache Read Operation
  - Copy-Back Operation
  - EDO mode
  - OTP Operation
  - Bad-Block-Protect

- **Advanced Security Protection**
  - Hardware Data Protection
    - Program/Erase Lockout during Power Transitions

- **Industry Standard Pin-out & Packages**
  - T =48-pin TSOP 1
  - B =63-ball VFBGA

GENERAL DESCRIPTION

The IS34/35ML1G084 is a 128Mx8bit with spare 4Mx8bit capacity. The device is offered in 3.3V Vcc Power Supply. Its NAND cell provides the most cost-effective solution for the solid state mass storage market. The memory is divided into blocks that can be erased independently so it is possible to preserve valid data while old data is erased.

The device contains 1,024 blocks, composed by 64 pages consisting in two NAND structures of 32 series connected Flash cells. A program operation allows to write the 2,112-Byte page in typical 400us and an erase operation can be performed in typical 3ms on a 128K-Byte for X8 device block.

Data in the page mode can be read out at 25ns cycle time per Word. The I/O pins serve as the ports for address and command inputs as well as data input/output.

The copy back function allows the optimization of defective blocks management: when a page program operation fails, the data can be directly programmed in another page inside the same array section without the time consuming serial data insertion phase.

The cache program feature allows the data insertion in the cache register while the data register is copied into the Flash array.

This pipelined program operation improves the program throughput when long files are written inside the memory. A cache read feature is also implemented. This feature allows to dramatically improving the read throughput when consecutive pages have to be streamed out. This device includes extra feature: Automatic Read at Power Up.

TABLE OF CONTENTS

FEATURES 2
GENERAL DESCRIPTION 3
TABLE OF CONTENTS 4
1. PIN CONFIGURATION 6
2. PIN DESCRIPTIONS 8
3. BLOCK DIAGRAM 9
4. OPERATION DESCRIPTION 11
5. ELECTRICAL CHARACTERISTICS 13
5.1 ABSOLUTE MAXIMUM RATINGS (1) 13
5.2 Recommended Operating Conditions 13
5.3 DC CHARACTERISTICs 14
5.4 Valid Block 14
5.5 AC Measurement Condition 15
5.6 AC PIN CAPACITANCE (TA = 25°C, VCC=3.3V, 1MHz) 15
5.7 Mode Selection 15
5.8 ROGRAM/ERASE PERFORMANCne 16
5.9 AC CHARACTERISTICS for address/ command/data input 16
5.10 AC CHARACTERISTICS for operation 17
6. TIMING DIAGRAMS 18
6.1 Command latch cycle 18
6.2 Address Latch Cycle 18
6.3 Input Data Latch Cycle 19
6.4 Serial Access Cycle after Read (CLE=L, WE#=H, ALE=L) 19
6.5 Serial Access Cycle after Read (EDO Type CLE=L, WE#=H, ALE=L) 20
6.6 Status Read Cycle 20
6.7 Read Operation (One PAGE) 21
6.8 Read Operation (Intercepted by CE#) 21
6.9 Random Data Output In a Page 22
6.10 Page program operation 22
6.11 Page Program Operation with Random Data Input 23
6.12 Copy-Back Operation with Random Data InpuT 24
6.13 Cache Program Operation 25
6.14 Block Erase Operation 25
6.15 Cache read operaTION 26
7. ID Definition Table 27
8. DEVICE OPERATION 29
8.1 Page READ OPERATION 29
8.2 Page Program 31

8.3 Cache Program 32
8.4 Copy-Back Program 33
8.5 Block Erase 34
8.6 Read Status 34
8.7 Read ID 36
8.8 Reset 37
8.9 Cache Read 38
8.10 Ready/Busy# 39
8.11 Data Protection and Power Up Sequence 40
8.12 Write Protect Operation 41
9. INVALID BLOCK AND ERROR MANAGEMENT 43
9.1 Mask Out Initial Invalid Block(s) 43
9.2 Identifying Initial Invalid Block(s) and Block Replacement Management 43
9.3 ERRor in Read or Write operation 45
9.4 Addressing for PROGRAM operation 50
9.5 System Interface Using CE# NOT Care operation 51
10. PACKAGE TYPE INFORMATION 52
10.1 48-Pin TSOP (TYPE I) Package (T) 52
10.2 63-BALL VFBGA Package (B) 53
11. ORDERING INFORMATION – Valid Part Numbers 54

1. PIN CONFIGURATION

48-pin TSOP (Type I)

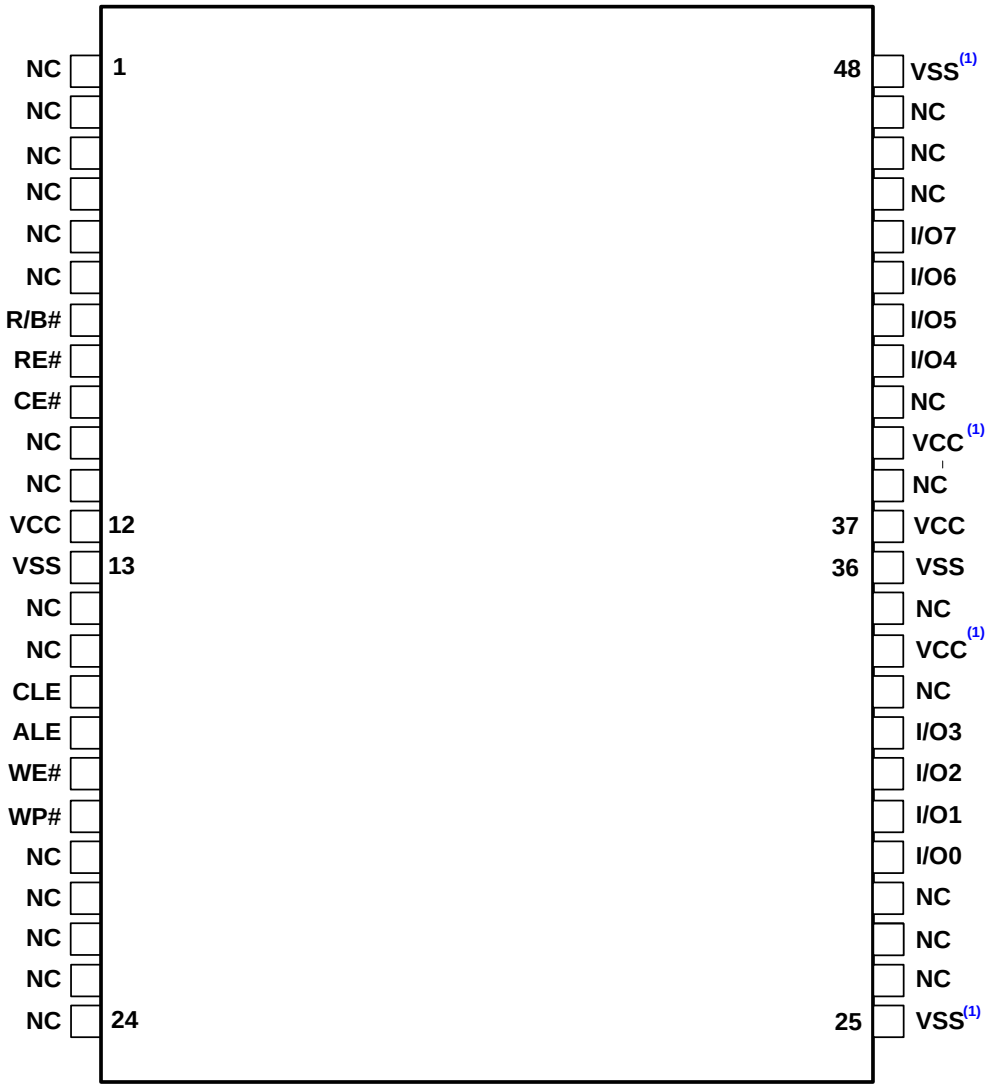

Note:

1. These pins might not be bonded in the package; however it is recommended to connect these pins to the designated external sources for ONFI compatibility.

63-ball VFBGA

Balls Down, Top View

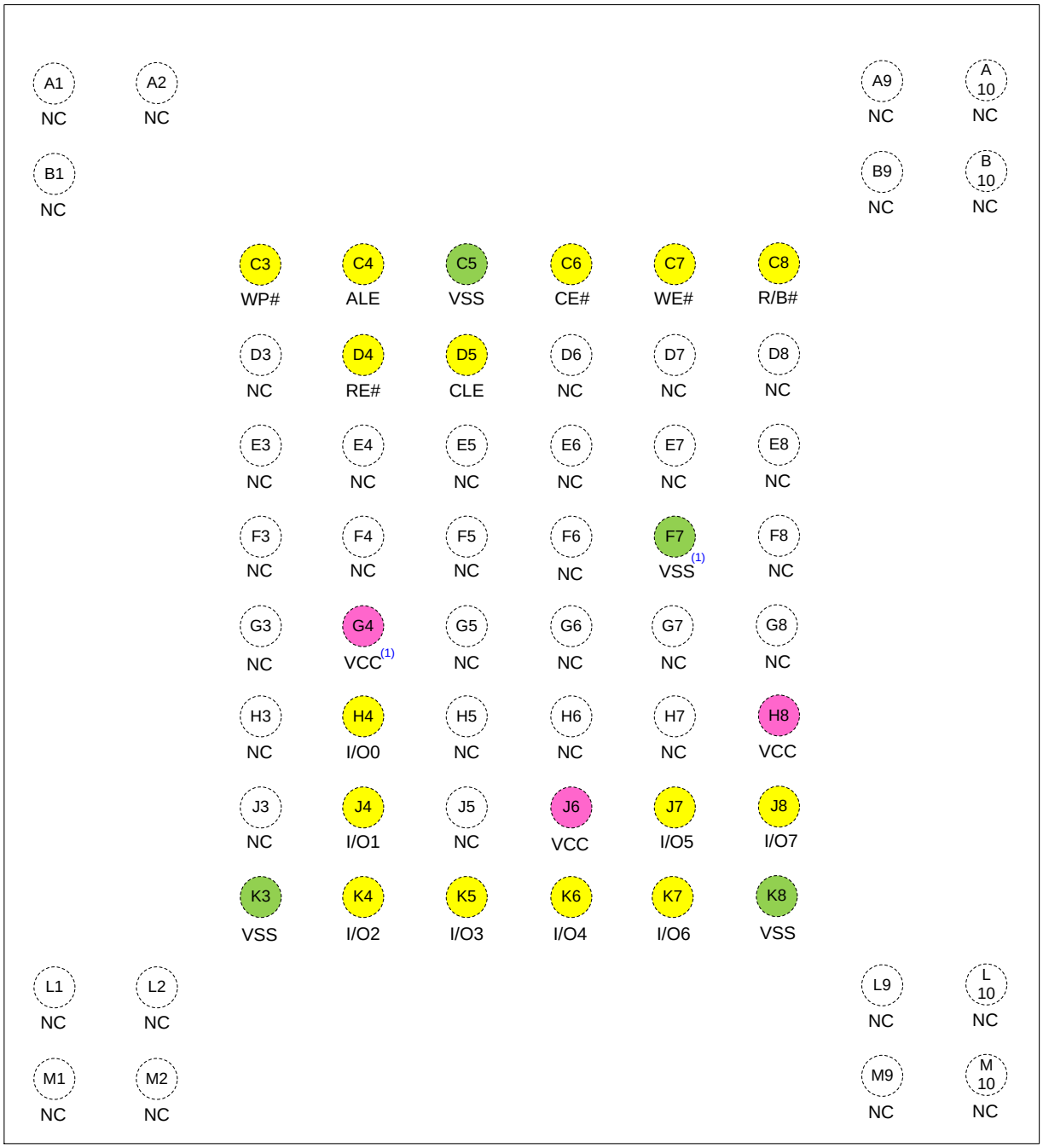

Note:

1. These pins might not be bonded in the package; however it is recommended to connect these pins to the designated external sources for ONFI compatibility.

2. PIN DESCRIPTIONS

Pin Name	Pin Function
I/O0 ~ I/O7 (X8)	**DATA INPUTS/OUTPUTS** The I/O pins are used to input command, address and data, and to output data during read operations. The I/O pins float to high-z when the chip is deselected or when the outputs are disabled.
CLE	**COMMAND LATCH ENABLE** The CLE input controls the activating path for commands sent to the internal command registers. Commands are latched into the command register through the I/O ports on the rising edge of the WE# signal with CLE high.
ALE	**ADDRESS LATCH ENABLE** The ALE input controls the activating path for addresses sent to the internal address registers. Addresses are latched into the address register through the I/O ports on the rising edge of WE# with ALE high.
CE#	**CHIP ENABLE** The CE# input is the device selection control. When the device is in the Busy state, CE# high is ignored, and the device does not return to standby mode in program or erase operation. Regarding CE# control during read operation, refer to 'Page read' section of Device operation.
RE#	**READ ENABLE** The RE# input is the serial data-out control, and when it is active low, it drives the data onto the I/O bus. Data is valid tREA after the falling edge of RE# which also increments the internal column address counter by one.
WE#	**WRITE ENABLE** The WE# input controls writes to the I/O ports. Commands, address and data are latched on the rising edge of the WE# pulse.
WP#	**WRITE PROTECT** The WP# pin provides inadvertent write/erase protection during power transitions. The internal high voltage generator is reset when the WP# pin is active low.
R/B#	**READY/BUSY OUTPUT** The R/B# output indicates the status of the device operation. When low, it indicates that a program, erase or random read operation is in progress and returns to high state upon completion. It is an open drain output and does not float to high-z condition when the chip is deselected or when outputs are disabled.
VCC	**POWER** VCC is the power supply for device.
VSS	**GROUND**
N.C.	**NO CONNECTION** Lead is not internally connected.

3. BLOCK DIAGRAM

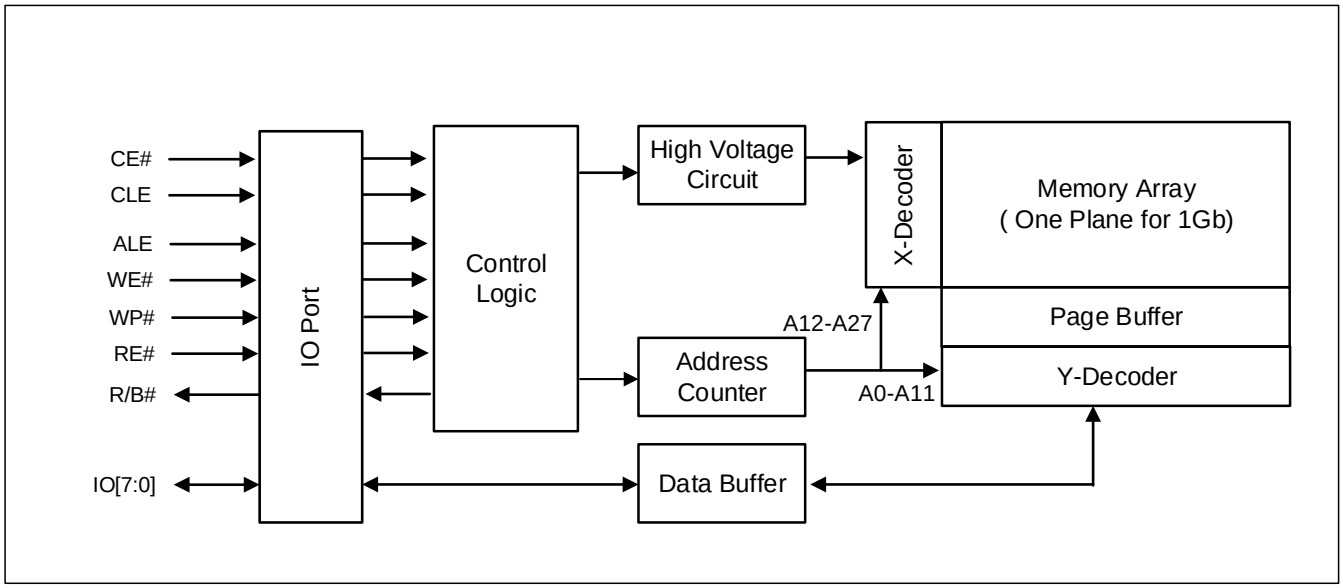

Figure 3.1 Functional Block Diagram

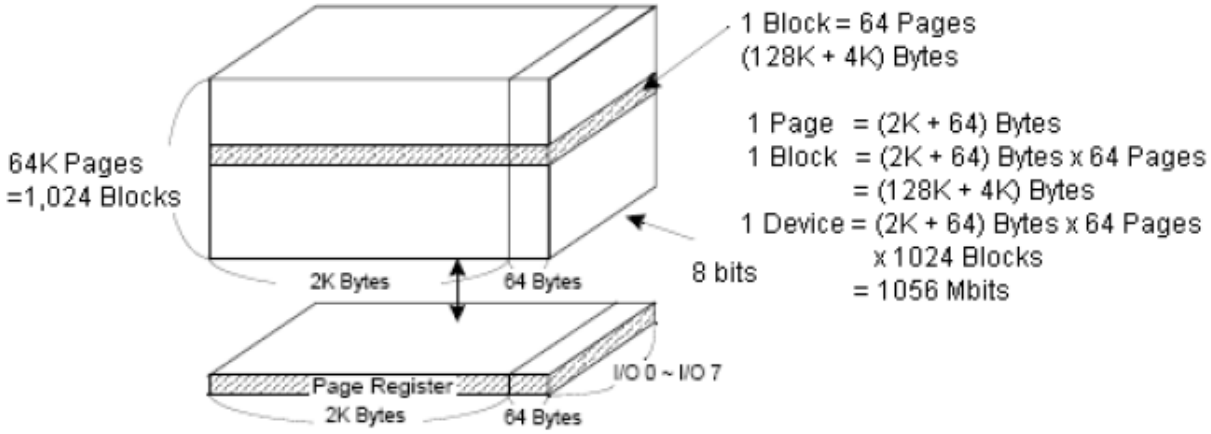

Figure 3.2 Array Organization

Table 3.1 ARRAY Address (x8)

	I/O 0	I/O 1	I/O 2	I/O 3	I/O 4	I/O 5	I/O 6	I/O 7	Address
1st cycle	A_0	A_1	A_2	A_3	A_4	A_5	A_5	A_7	Column Address
2nd cycle	A_8	A_9	A_{10}	A_{11}	*L	*L	*L	*L	Column Address
3rd cycle	A_{12}	A_{13}	A_{14}	A_{15}	A_{16}	A_{17}	A_{18}	A_{19}	Row Address
4th cycle	A_{20}	A_{21}	A_{22}	A_{23}	A_{24}	A_{25}	A_{26}	A_{27}	Row Address

Notes:
1. Column Address: Starting Address of the Register.
2. *L must be set to “Low”.
3. The device ignores any additional input of address cycles than required.

4. OPERATION DESCRIPTION

The IS34/35ML01G084 is a 1Gbit memory organized as 128K rows (pages) by 2,112x8 columns. Spare 64x8 columns are located from column address of 2,048~2,111. A 2,112-byte data register is connected to memory cell arrays accommodating data transfer between the I/O buffers and memory during page read and page program operations. The program and read operations are executed on a page basis, while the erase operation is executed on a block basis. The memory array consists of 1,024 separately erasable 128K-byte blocks. It indicates that the bit-by-bit erase operation is prohibited on the IS34/35ML01G084.

The device has addresses multiplexed into 8 I/Os. This scheme dramatically reduces pin counts and allows system upgrades to future densities by maintaining consistency in system board design. Command, address and data are all written through I/O's by bringing WE# to low while CE# is low. Those are latched on the rising edge of WE#. Command Latch Enable (CLE) and Address Latch Enable (ALE) are used to multiplex command and address respectively, via the I/O pins. Some commands require one bus cycle. For example, Reset Command, Status Read Command, etc require just one cycle bus. Some other commands, like page read and block erase and page program, require two cycles: one cycle for setup and the other cycle for execution.

In addition to the enhanced architecture and interface, the device incorporates copy-back program feature from one page to another page without need for transporting the data to and from the external buffer memory.

Table 4.1 Command Set

Function	1st Cycle	2nd Cycle	Acceptable Command during Busy
Read	00h	30h	
Read for Copy-Back	00h	35h	
Read ID	90h	-	
Reset	FFh	-	O
Page Program	80h	10h	
Copy-Back Program	85h	10h	
Block Erase	60h	D0h	
Random Data Input (1)	85h	-	
Random Data Output (1)	05h	E0h	
Read Status	70h	-	O
Cache Program	80h	15h	
Cache Read	31h	-	
Read Start For Last Page Cache Read	3Fh	-	

Note:

1. Random Data Input/Output can be executed in a page.

5. ELECTRICAL CHARACTERISTICS

5.1 ABSOLUTE MAXIMUM RATINGS [1]

Storage Temperature		-65°C to +150°C
Surface Mount Lead Soldering Temperature	Standard Package	240°C 3 Seconds
	Lead-free Package	260°C 3 Seconds
Input Voltage with Respect to Ground on All Pins		-0.6V to +4.6V
All I/O Voltage with Respect to Ground		-0.6V to V_{CC} + 0.3V(< 4.6V)
V_{CC}		-0.6V to +4.6V
Short Circuit Current		5mA
Electrostatic Discharge Voltage (Human Body Model)[2]		-2000V to +2000V

Notes:

1. **Applied conditions greater than those listed in "Absolute Maximum Ratings" may cause permanent damage to the device. This is a stress rating only and functional operation of the device at these or any other conditions above those indicated in the operational sections of this specification is not implied. Exposure to absolute maximum rating conditions for extended periods may affect reliability.**
2. **ANSI/ESDA/JEDEC JS-001**

5.2 RECOMMENDED OPERATING CONDITIONS

Part Number	IS34/35ML01G084
Operating Temperature (Industrial Grade)	-40°C to 85°C
Operating Temperature (Extended Grade)	-40°C to 105°C
Operating Temperature (Automotive Grade A1)	-40°C to 85°C
Operating Temperature (Automotive Grade A2)	-40°C to 105°C
V_{CC} Power Supply	2.7V (VMIN) – 3.6V (VMAX); 3.3V (Typ)

5.3 DC CHARACTERISTICS

(Under operating range)

Parameter		Symbol	Test Conditions	Min	Typ.	Max	Unit
Operating Current	Page Read with Serial Access	ICC1	tRC=tRC$_{MIN}$, CE#=VIL, IOUT=0mA	-	15	30	mA
	Program	ICC2	-	-	15		
	Erase	ICC3	-	-	15		
Stand-by Current (TTL)		ISB1	CE#=VIH, WP#=0V/VCC	-	-	1	
Stand-by Current (CMOS)		ISB2	CE#=VCC-0.2, WP#=0V/VCC	-	10	50	uA
Input Leakage Current		ILI	VIN=0 to Vcc (max)	-	-	+/-10	
Output Leakage Current		ILO	VOUT=0 to Vcc (max)	-	-	+/-10	
Input High Voltage		VIH (1)		0.8xVCC	-	Vcc+0.3	V
Input Low Voltage, All inputs		VIL (1)		-0.3	-	0.2xVCC	
Output High Voltage Level		VOH	IOH=-400 uA	2.4	-	-	
Output Low Voltage Level		VOL	IOL=2.1mA	-	-	0.4	
Output Low Current (R/B#)		IOL (R/B#)	VOL=0.4V	8	10	-	mA

Notes:

1. VIL can undershoot to - 2V and VIH can overshoot to VCC + 2V for durations of 20 ns or less.
2. Typical value are measured at Vcc=3.3V, TA=25℃. Not 100% tested.

5.4 VALID BLOCK

Parameter	Symbol	Min	Typ.	Max	Unit
IS34/35ML01G084	NVB	1,004	-	1,024	Block

Notes:

1. The device may include initial invalid blocks when first shipped. Additional invalid blocks may develop while being used. The number of valid blocks is presented with both cases of invalid blocks considered. Invalid blocks are defined as blocks that contain one or more bad bits which cause status failure during program and erase operation. Do not erase or program factory-marked bad blocks. Refer to the attached technical notes for appropriate management of initial invalid blocks.
2. The 1st block, which is placed on 00h block address, is guaranteed to be a valid block at the time of shipment and is guaranteed to be a valid block up to 1K program/erase cycles with 4bit/512Byte ECC.

5.5 AC MEASUREMENT CONDITION

Symbol	Parameter	Min	Max	Units
CL	Output Load	1 TTL GATE and CL = 50pF		pF
TR,TF	Input Rise and Fall Times		5	ns
VIN	Input Pulse Voltages	0V to V_{CC}		V
VREFI	Input Timing Reference Voltages	$0.5V_{CC}$		V
VREFO	Output Timing Reference Voltages	$0.5V_{CC}$		V

Note:
1. Refer to 8.10 Ready/Busy#, R/B#'s Busy to Ready time is decided by pull up register (Rp) tied to R/B# pin.

5.6 AC PIN CAPACITANCE (TA = 25°C, VCC=3.3V, 1MHZ)

Symbol	Parameter	Test Condition	Min	Typ	Max	Units
C_{IN}	Input Capacitance	V_{IN} = 0V	-	-	8	pF
$C_{I/O}$	Input /Output Capacitance	$V_{I/O}$ = 0V	-	-	8	pF

Note:
1. These parameters are characterized and not 100% tested.

5.7 MODE SELECTION

CLE	ALE	CE#	WE#	RE#	WP#	Mode	
H	L	L	↑	H	X	Read Mode	Command Input
L	H	L	↑	H	X		Address Input (5 clock)
H	L	L	↑	H	H	Write Mode	Command Input
L	H	L	↑	H	H		Address Input (5 clock)
L	L	L	↑	H	H	Data Input	
L	L	L	H	↓	X	Data Output	
X	X	X	X	H	X	During Read (Busy)	
X	X	X	X	X	H	During Program (Busy)	
X	X	X	X	X	H	During Erase (Busy)	
X	X(1)	X	X	X	L	Write Protect	
X	X	H	X	X	0V/V_{CC}(2)	Stand-by	

Notes:
1. X can be VIL or VIH.
2. WP# should be biased to CMOS high or CMOS low for standby.

5.8 ROGRAM/ERASE PERFORMANCNE

(Industrial: T_A=-40 to 85℃, Automotive, A1: T_A=-40 to 85℃, Vcc=2.7V ~ 3.6V)

Parameter	Symbol	Min	Typ	Max	Unit
Average Program Time	tPROG	-	300	750	us
Dummy Busy Time for Cache Operation	tCBSY	-	3	750	us
Number of Partial Program Cycles in the Same Page	Nop	-	-	4	cycle
Block Erase Time	tBERS	-	3	10	ms

Notes:

1. Typical program time is defined as the time within which more than 50% of the whole pages are programmed at 3.3V Vcc and 25℃ temperature.
2. **tPROG is the average program time of all pages. Users should be noted that the program time variation from page to page is possible.**
3. tCBSY max.time depends on timing between internal program completion and data-in.

5.9 AC CHARACTERISTICS FOR ADDRESS/ COMMAND/DATA INPUT

Parameter	Symbol	Min	Max	Unit
CLE Setup Time	tCLS(1)	12	-	ns
CLE Hold Time	tCLH	5	-	ns
CE# Setup Time	tCS(1)	20	-	ns
CE# Hold Time	tCH	5	-	ns
WE# Pulse Width	tWP	12	-	ns
ALE Setup Time	tALS(1)	12	-	ns
ALE Hold Time	tALH	5	-	ns
Data Setup Time	tDS(1)	12	-	ns
Data Hold Time	tDH	5	-	ns
Write Cycle Time	tWC	25	-	ns
WE# High Hold Time	tWH	10	-	ns
Address to Data Loading Time	tADL(2)	100(2)	-	ns

Note:

1. The transition of the corresponding control pins must occur only once while WE# is held low.
2. tADL is the time from the WE rising edge of final address cycle to the WE# rising edge of first data cycle.

5.10 AC CHARACTERISTICS FOR OPERATION

Parameter		Symbol	Min	Max	Unit
Data Transfer from Cell to Register		tR	-	25	us
ALE to RE# Delay		tAR	10	-	ns
CLE to RE# Delay		tCLR	10	-	ns
Ready to RE# Low		tRR	20	-	ns
RE# Pulse Width		tRP	12	-	ns
WE# High to Busy		tWB	-	100	ns
WP# Low to WE# Low (disable mode) WP# High to WE# Low (enable mode)		tWW	100	-	ns
Read Cycle Time		tRC	25	-	ns
RE# Access Time		tREA	-	20	ns
CE# Access Time		tCEA	-	25	ns
RE# High to Output Hi-Z		tRHZ	-	100	ns
CE# High to Output Hi-Z		tCHZ	-	30	ns
CE# High to ALE or CLE Don't care		tCSD	0		ns
RE# High to Output Hold		tRHOH	15	-	ns
RE# Low to Output Hold		tRLOH	5		ns
CE# High to Output Hold		tCOH	15	-	ns
RE# High Hold Time		tREH	10	-	ns
Output Hi-Z to RE# Low		tIR	0	-	ns
RE# High to WE# Low		tRHW	100	-	ns
WE# High to RE# Low		tWHR	60	-	ns
Device Resetting Time during…	Read	tRST	-	5	us
	Program		-	10	us
	Erase		-	500	us
	Ready		-	5 (1)	us
Cache Busy in Read Cache (following 31h and 3Fh)		tDCBSYR	-	30	us

Note: If reset command (FFh) is written at Ready state, the device goes into Busy for maximum 5us.

6. TIMING DIAGRAMS

6.1 COMMAND LATCH CYCLE

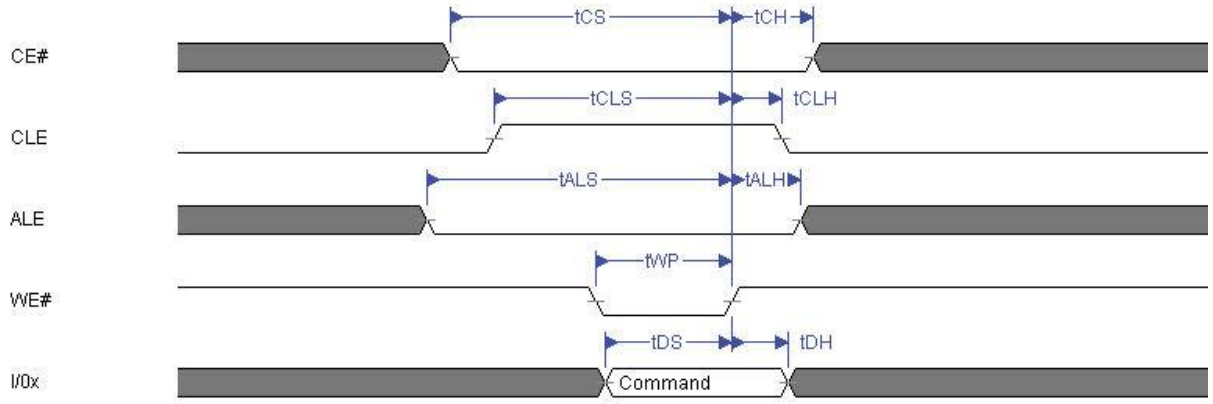

Figure 6.1 Command Latch Cycle

6.2 ADDRESS LATCH CYCLE

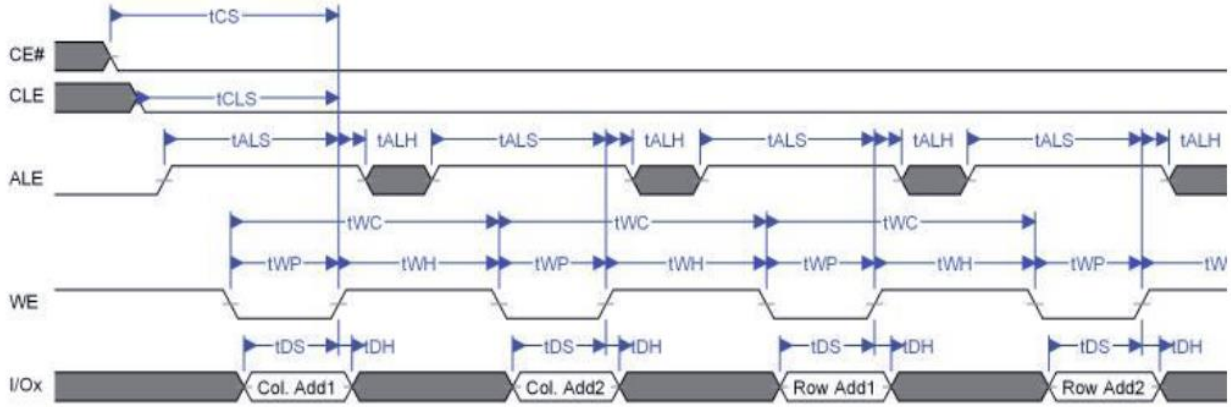

Figure 6.2 Address Latch Cycle

6.3 INPUT DATA LATCH CYCLE

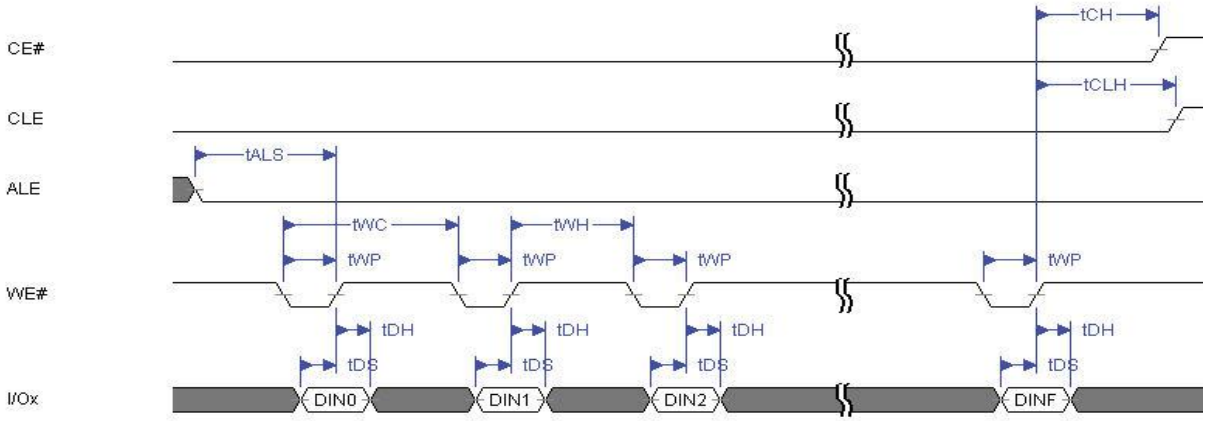

Figure 6.3 Input Data Latch Cycle

6.4 SERIAL ACCESS CYCLE AFTER READ (CLE=L, WE#=H, ALE=L)

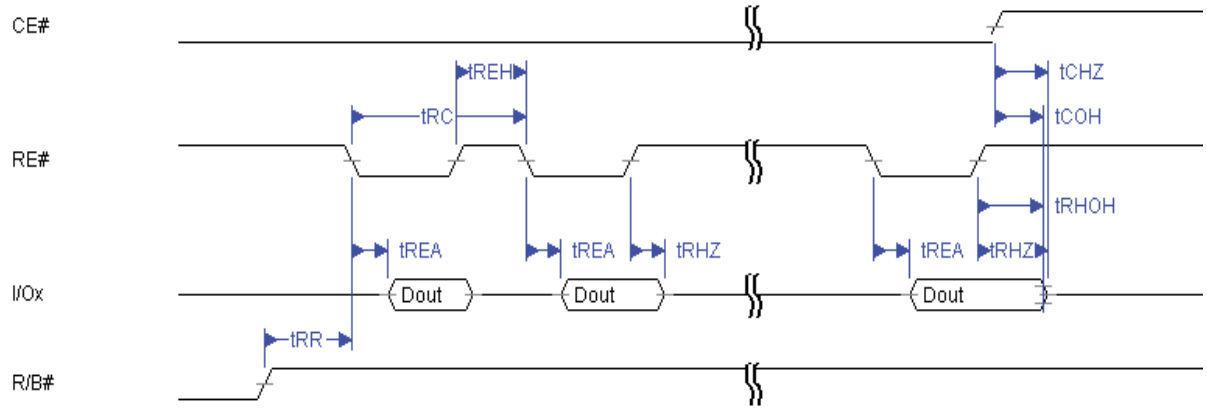

Note:

1. Dout transition is measured at ±200mV from steady state voltage at I/O with load.
2. t_{RHOH} starts to be valid when frequency is lower than 33MHz.

Figure 6.4 Serial Access Cycle after Read

6.5 SERIAL ACCESS CYCLE AFTER READ (EDO TYPE CLE=L, WE#=H, ALE=L)

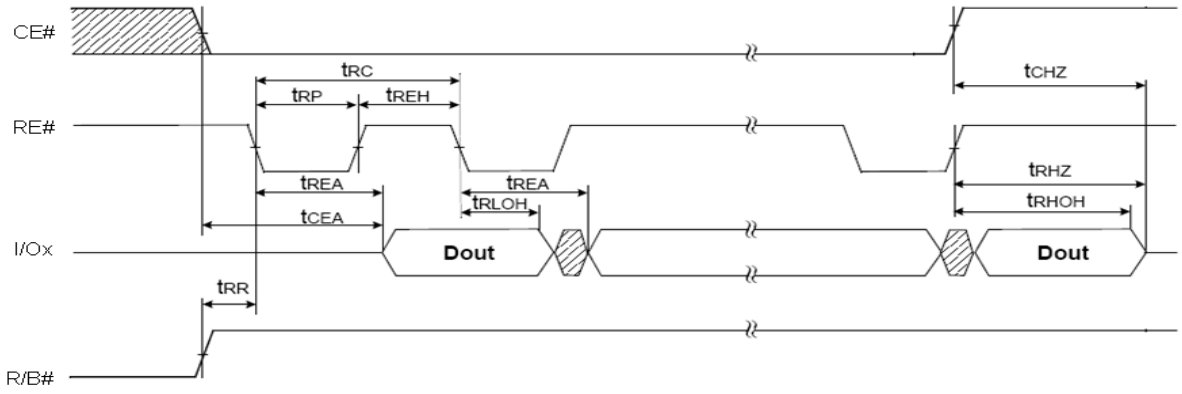

Notes:
1. Transition is measured at +/-200mV from steady state voltage with load.
   This parameter is sample and not 100% tested. (tCHZ, tRHZ)
2. tRLOH is valid when frequency is higher than 33MHZ.
   tRHOH starts to be valid

Figure 6.5 Serial Access Cycle after Read (EDO Type CLE=L, WE#=H, ALE=L)

6.6 STATUS READ CYCLE

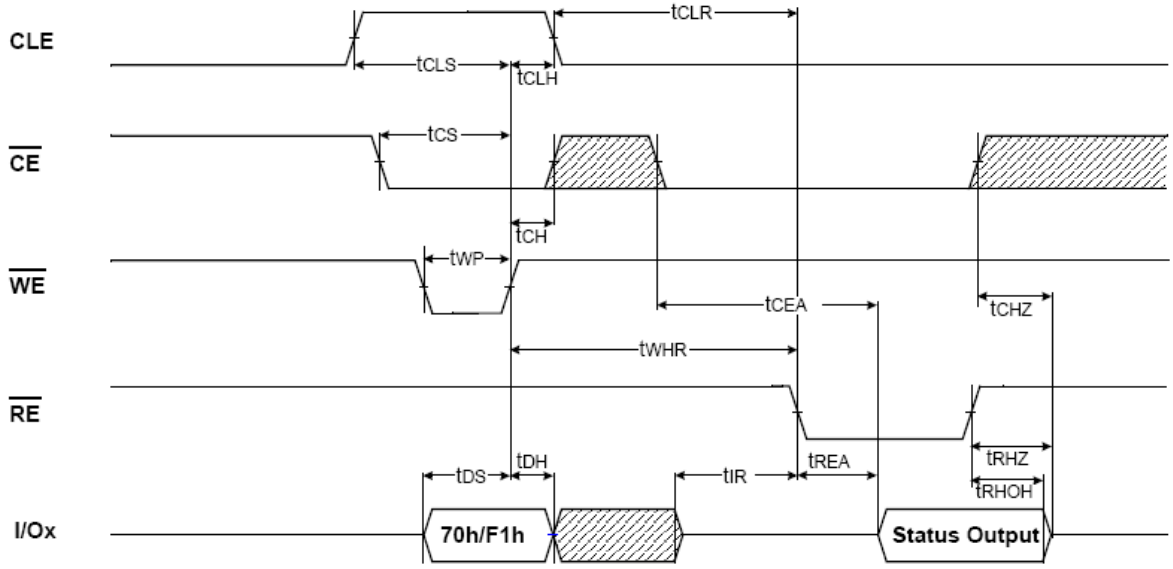

Figure 6.6 Status Read Cycle

6.7 READ OPERATION (ONE PAGE)

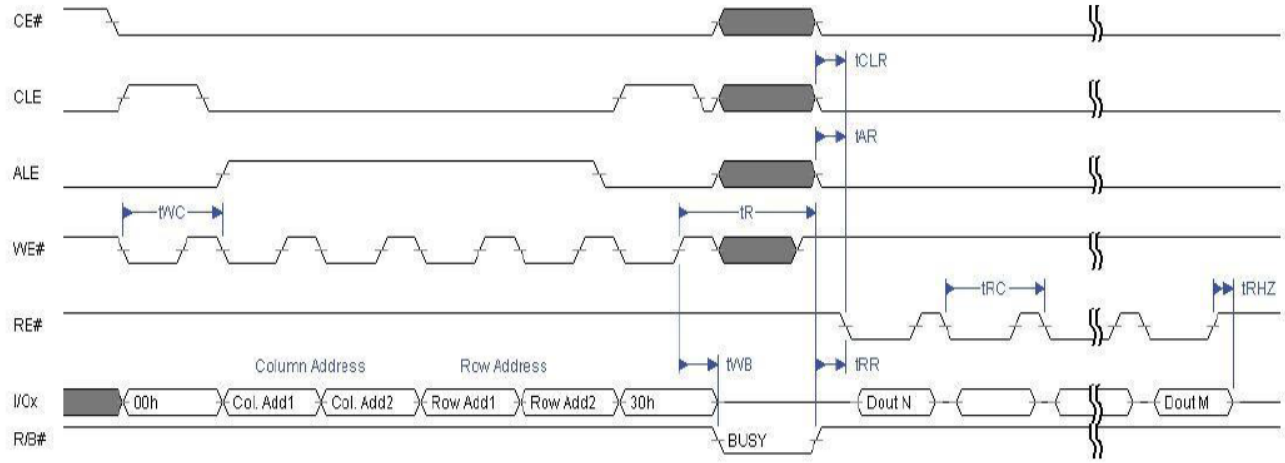

Figure 6.7 Read Operation (One Page)

6.8 READ OPERATION (INTERCEPTED BY CE#)

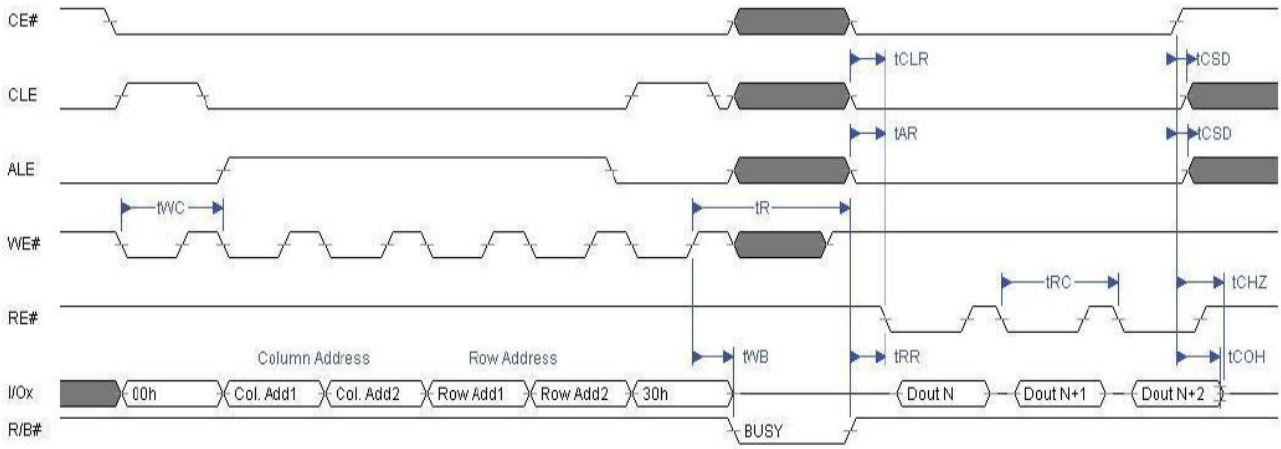

Figure 6.8 Read Operation (Intercepted by CE#)

6.9 RANDOM DATA OUTPUT IN A PAGE

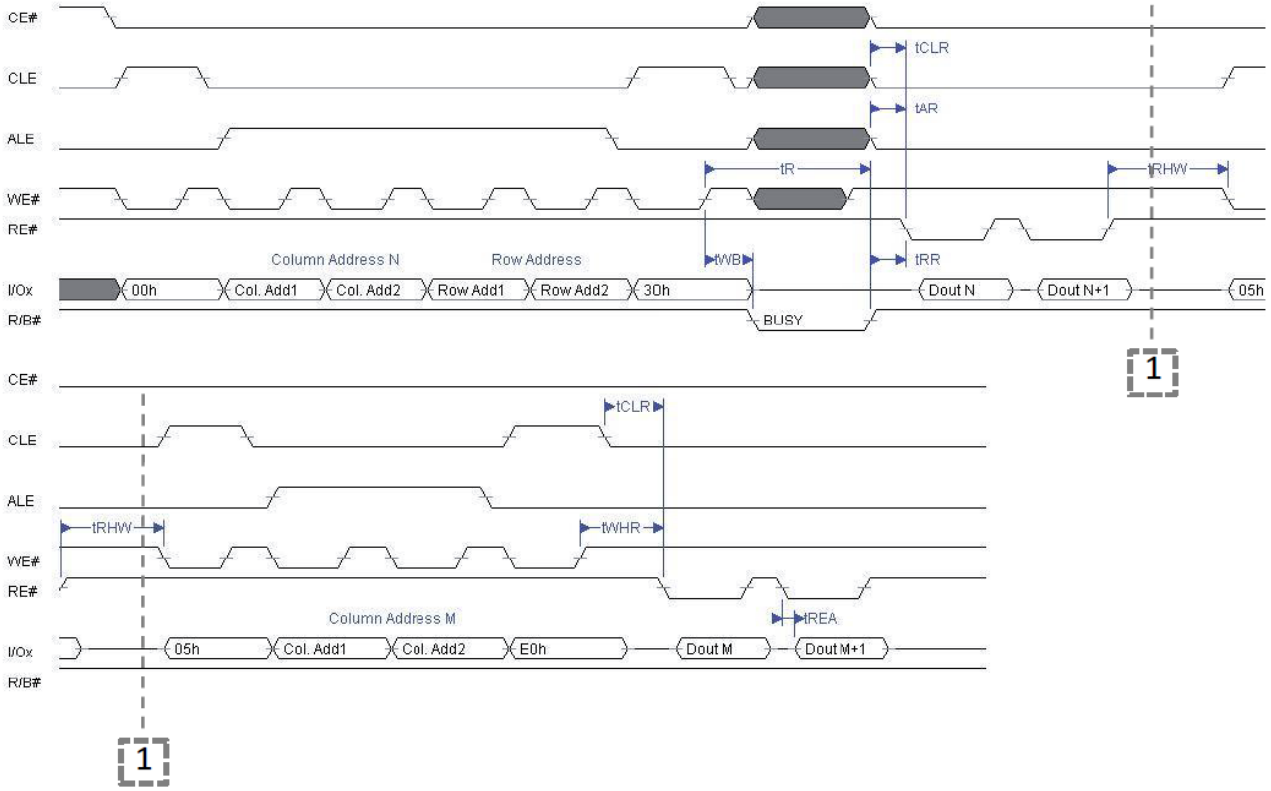

Figure 6.9 Random Data Output in a Page

6.10 PAGE PROGRAM OPERATION

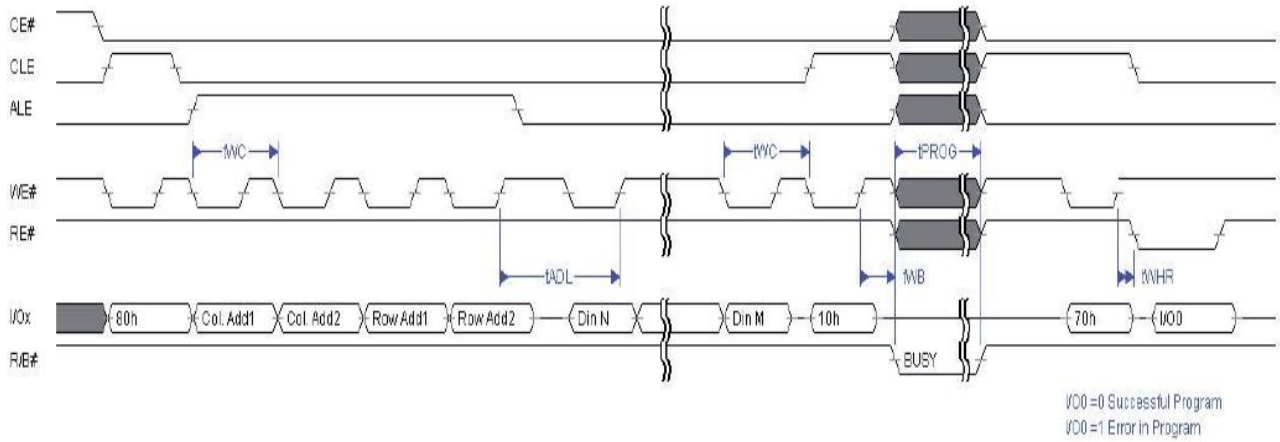

Figure 6.10 Page Program Operation

6.11 PAGE PROGRAM OPERATION WITH RANDOM DATA INPUT

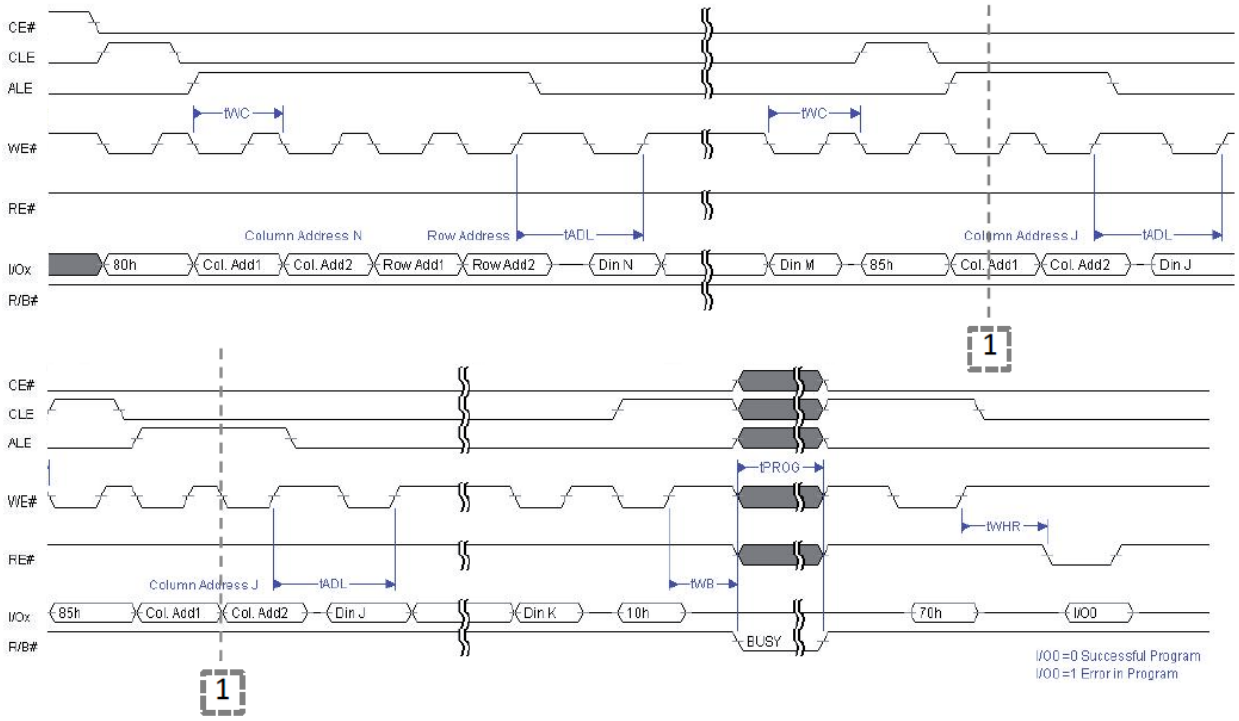

Note: t_{ADL} is the time from the WE# rising edge of final address cycle to the WE# rising edge of the first data cycle.

Figure 6.11 Page Program Operation with Random Data Input

6.12 COPY-BACK OPERATION WITH RANDOM DATA INPUT

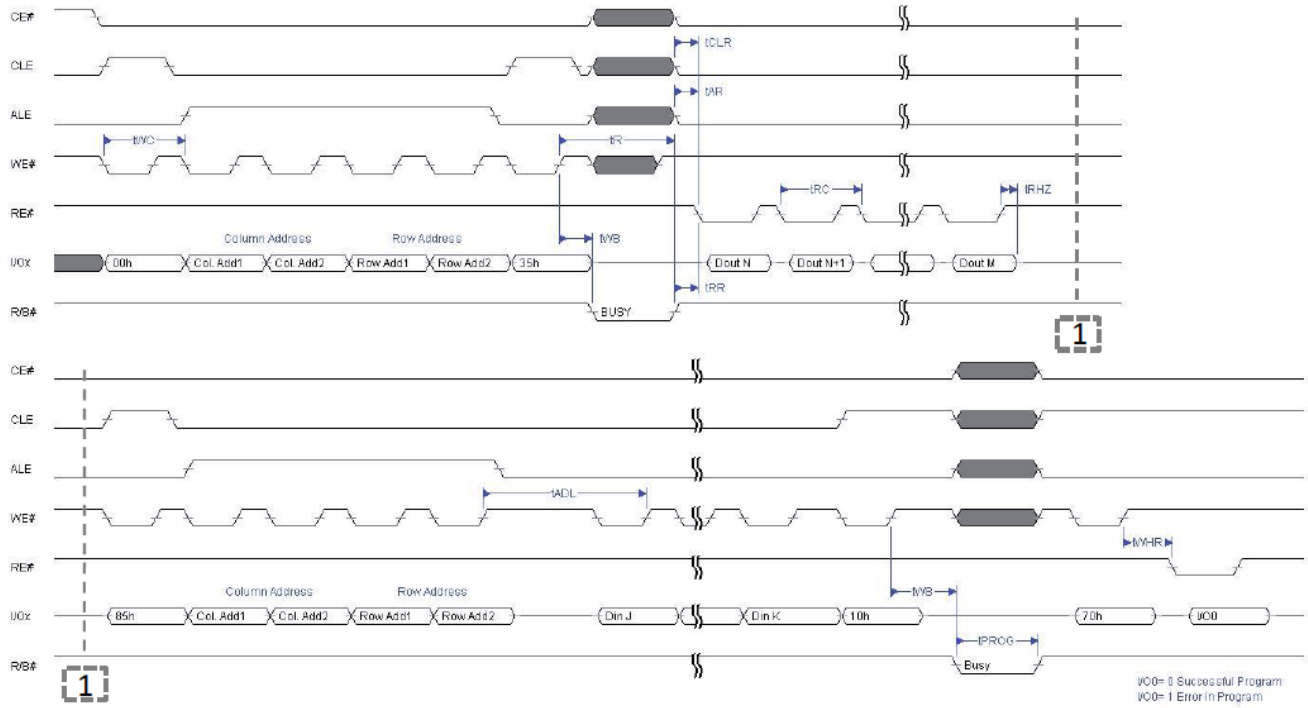

Figure 6.12 Copy-Back Operation with Random Data Input

6.13 CACHE PROGRAM OPERATION

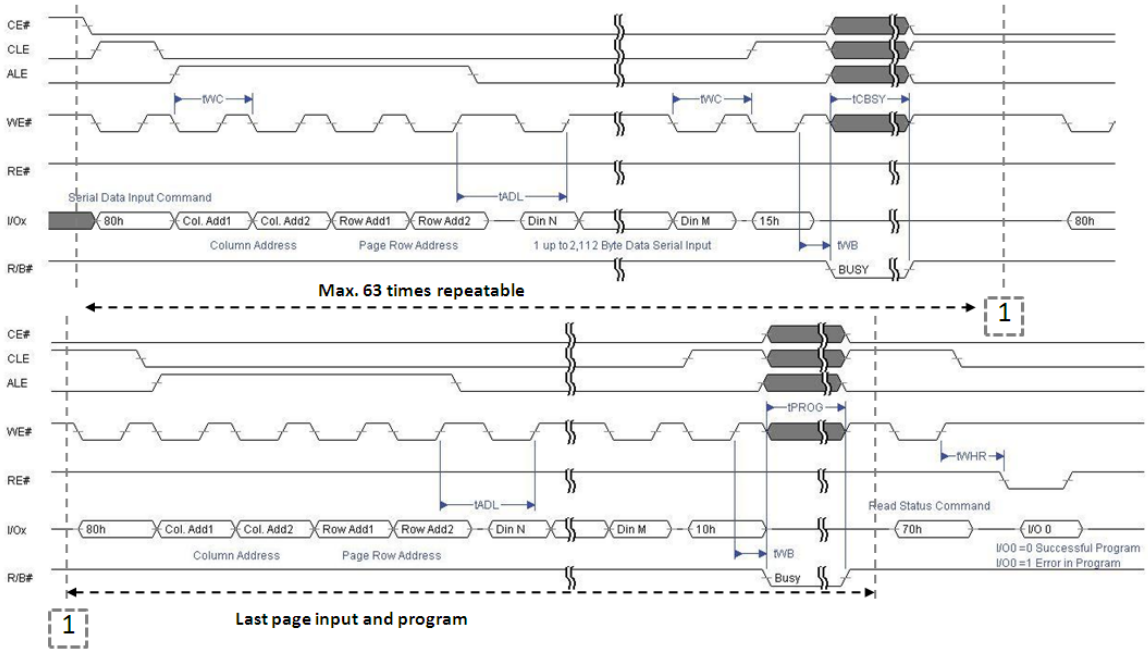

Figure 6.13 Cache Program Operation

6.14 BLOCK ERASE OPERATION

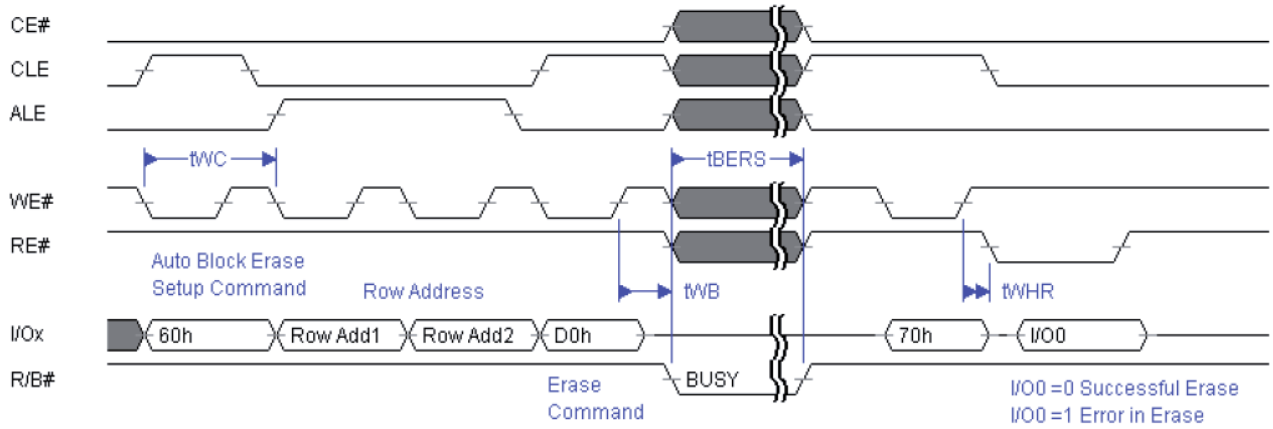

Figure 6.14. Block Erase Operation

6.15 CACHE READ OPERATION

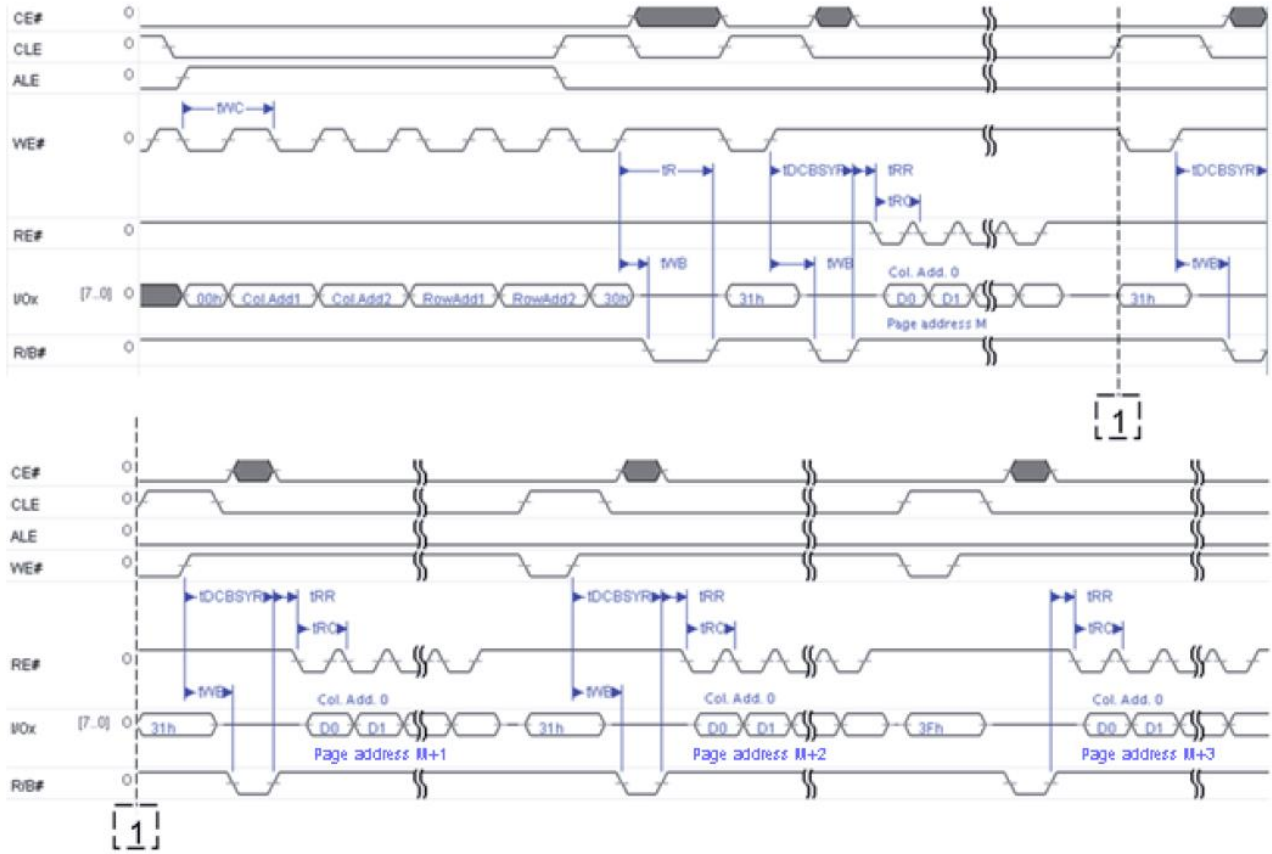

Figure 6.15 Cache Read Operation

7. ID Definition Table

The device contains ID codes that identify the device type and the manufacturer.

Part No.	1st Cycle (Maker Code)		2nd Cycle (Device Code)	3rd Cycle	4th Cycle	5th Cycle	6th ~ 8th Cycle
IS34/35ML01G084(X8)	C8h		D1h	80h	95h	40h	7Fh

	Description
1st Byte	Maker Code
2nd Byte	Device Code
3rd Byte	Internal Chip Number, Cell Type, etc
4th Byte	Page Size, Block Size, etc
5th Byte	Plane Number, Plane Size, ECC Level
6th Byte	JEDEC Maker Code Continuation Code, 7Fh
7th Byte	JEDEC Maker Code Continuation Code, 7Fh
8th Byte	JEDEC Maker Code Continuation Code, 7Fh

3rd ID Data

Item	Description	I/O7	I/O6	I/O5	I/O4	I/O3	I/O2	I/O1	I/O0
Internal Chip Number	1							0	0
	2							0	1
	4							1	0
	8							1	1
Cell Type	2 Level Cell					0	0		
	4 Level Cell					0	1		
	8 Level Cell					1	0		
	16 Level Cell					1	1		
Number of Simultaneously Programmed Pages	1			0	0				
	2			0	1				
	4			1	0				
	8			1	1				
Interleave Program Between Multiple Chips	Not Support		0						
	Support		1						
Cache Program	Not Support	0							
	Support	1							

4th ID Data

Item	Description	I/O7	I/O6	I/O5	I/O4	I/O3	I/O2	I/O1	I/O0
Page Size (w/o redundant area)	1KB 2KB 4KB 8KB							0 0 1 1	0 1 0 1
Redundant Area Size (Byte/512Byte)	8 16						0 1		
Block Size (w/o redundant area)	64KB 128KB 256KB 512KB			0 0 1 1	0 1 0 1				
Organization	X8 X16		0 1						
Serial Access Time	45ns Reserved 25ns Reserved	0 0 1 1				0 1 0 1			

5th ID Data

Item	Description	I/O7	I/O6	I/O5	I/O4	I/O3	I/O2	I/O1	I/O0
ECC Level	4bit/512B 2bit/512B 1bit/512B Reserved							0 0 1 1	0 1 0 1
Plane Number	1 2 4 8					0 0 1 1	0 1 0 1		
Plane Size(without Redundant Area)	64Kb 128Kb 256Kb 512Kb 1Gb 2Gb 4Gb 8Gb		0 0 0 0 1 1 1 1	0 0 1 1 0 0 1 1	0 1 0 1 0 1 0 1				
Reserved	Reserved	0							

6th ~ 8th ID Data

Item	Description	I/O7	I/O6	I/O5	I/O4	I/O3	I/O2	I/O1	I/O0
JEDEC Maker Code Continuation Code	7F	0	1	1	1	1	1	1	1

8. DEVICE OPERATION

8.1 PAGE READ OPERATION

Upon initial device power up, the device defaults to Read mode. This operation is also initiated by writing 00h command, four-cycle address, and 30h command. After initial power up, the 00h command can be skipped because it has been latched in the command register. The 2,112Byte of data on a page are transferred to cache registers via data registers within 25us (tR). Host controller can detect the completion of this data transfer by checking the R/B# output. Once data in the selected page have been loaded into cache registers, each Byte can be read out in 25ns cycle time by continuously pulsing RE#. The repetitive high-to-low transitions of RE# clock signal make the device output data starting from the designated column address to the last column address.

The device can output data at a random column address instead of sequential column address by using the Random Data Output command. Random Data Output command can be executed multiple times in a page.

After power up, device is in read mode so 00h command cycle is not necessary to start a read operation.

A page read sequence is illustrated in Figure below, where column address, page address are placed in between commands 00h and 30h. After tR read time, the R/B# de-asserts to ready state. Read Status command (70h) can be issued right after 30h. Host controller can toggle RE# to access data starting with the designated column address and their successive bytes.

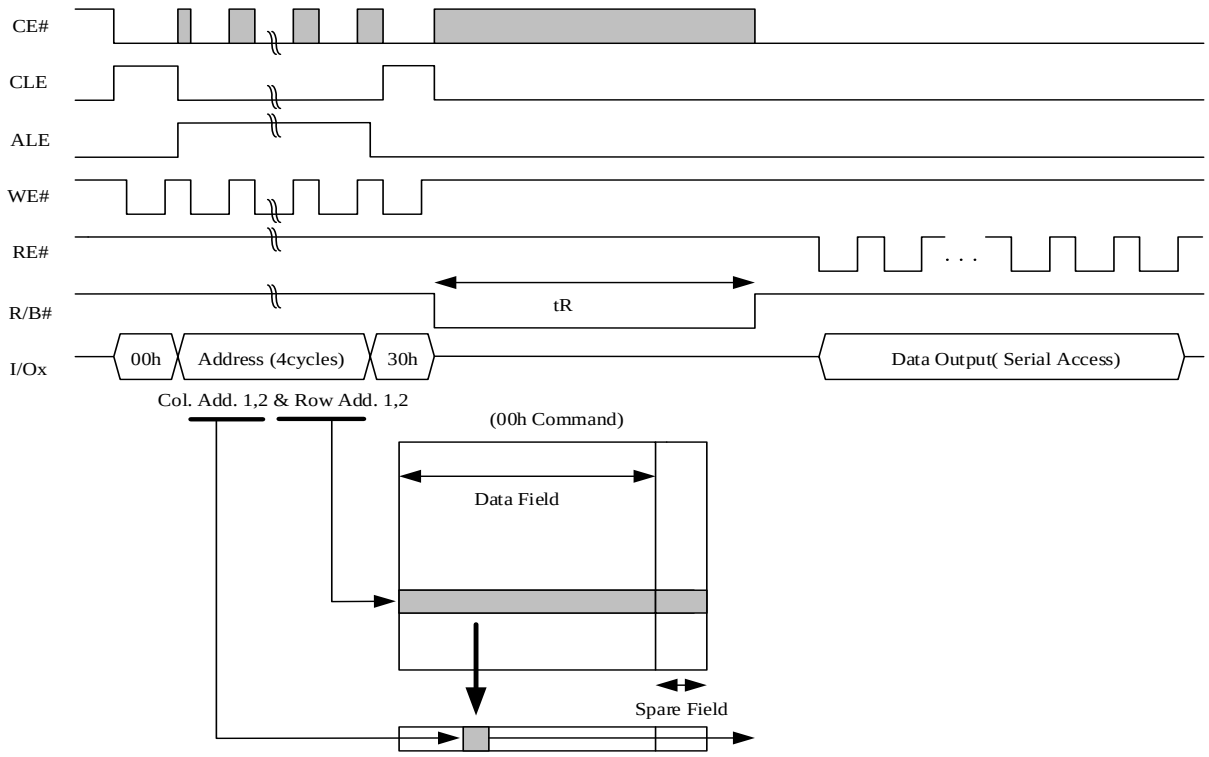

Figure 8.1 Read Operation

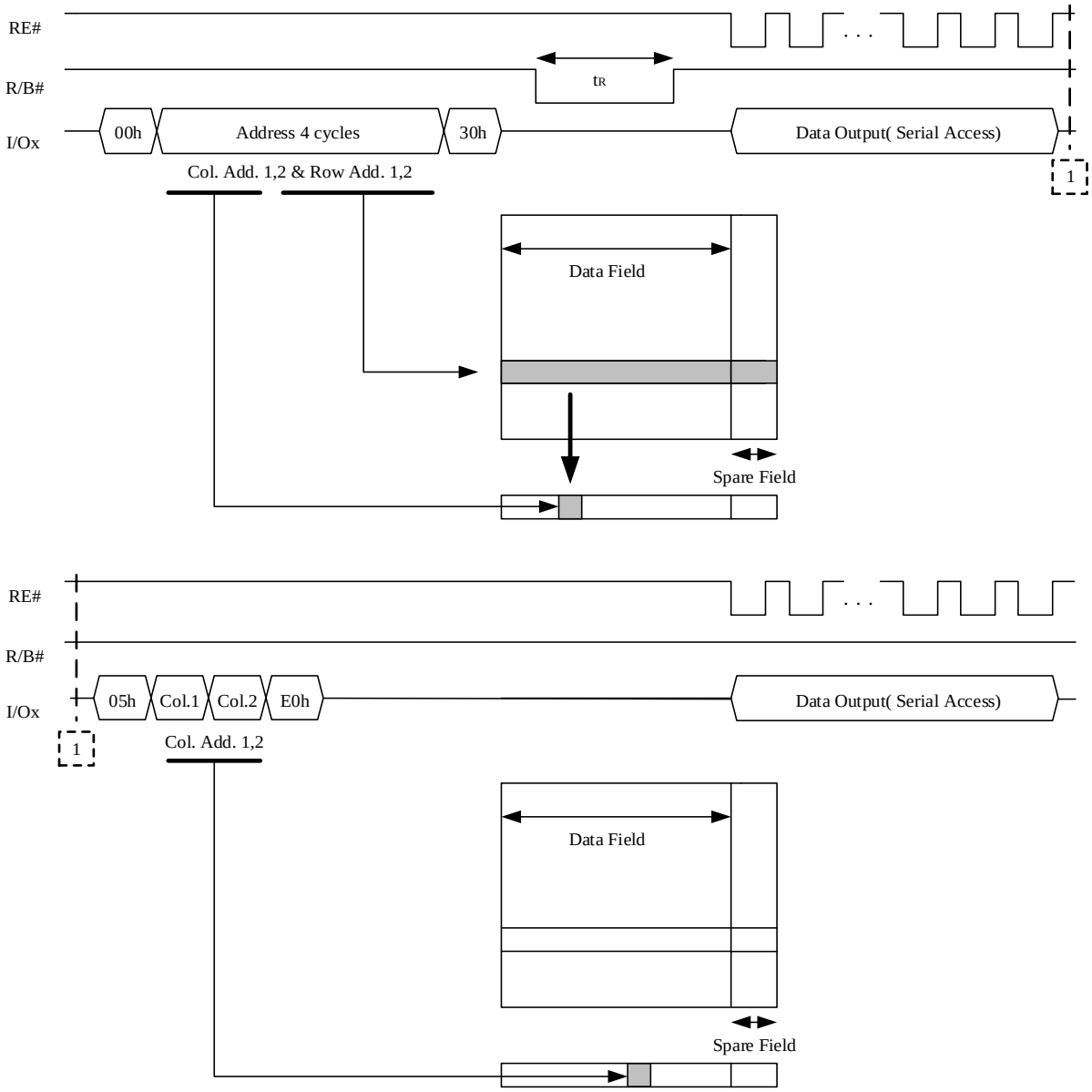

Figure 8.2 Random Page Operation

8.2 PAGE PROGRAM

The device is programmed based on the unit of a page, and consecutive partial page programming on one page without intervening erase operation is strictly prohibited. Addressing of page program operations within a block should be in sequential order. A complete page program cycle consists of a serial data input cycle in which up to 2,112byteof data can be loaded into data register via cache register, followed by a programming period during which the loaded data are programmed into the designated memory cells.

The serial data input cycle begins with the Serial Data Input command (80h), followed by a four-cycle address input and then serial data loading. The bytes not to be programmed on the page do not need to be loaded. The column address for the next data can be changed to the address follows Random Data Input command (85h). Random Data Input command may be repeated multiple times in a page. The Page Program Confirm command (10h) starts the programming process. Writing 10h alone without entering data will not initiate the programming process. The internal write engine automatically executes the corresponding algorithm and controls timing for programming and verification, thereby freeing the host controller for other tasks. Once the program process starts, the host controller can detect the completion of a program cycle by monitoring the R/B# output or reading the Status bit (I/O6) using the Read Status command. Only Read Status and Reset commands are valid during programming. When the Page Program operation is completed, the host controller can check the Status bit (I/O0) to see if the Page Program operation is successfully done. The command register remains the Read Status mode unless another valid command is written to it.

A page program sequence is illustrated in Figure below, where column address, page address, and data input are placed in between 80h and 10h. After tPROG program time, the R/B# de-asserts to ready state. Read Status command (70h) can be issued right after 10h.

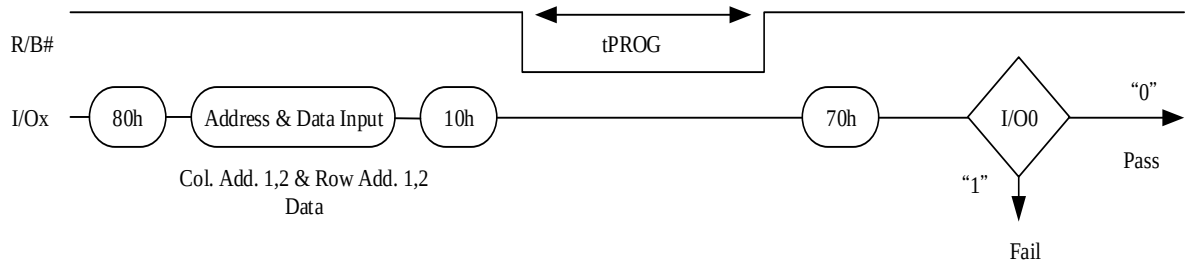

Figure 8.3 Program and Read Status Operation

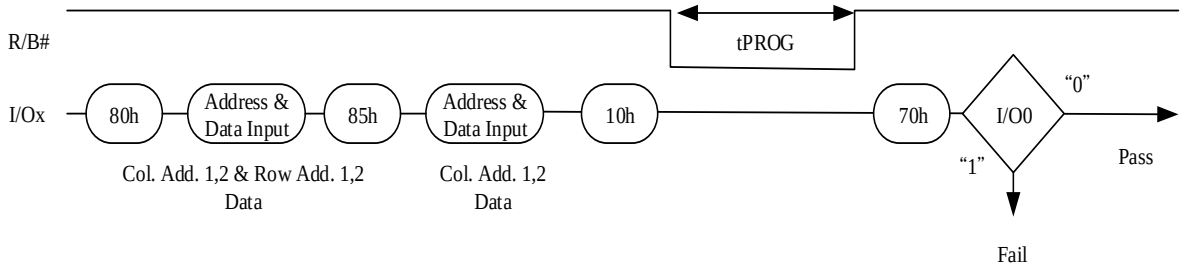

Figure 8.4 Random Data Input In a Page

8.3 CACHE PROGRAM

The Cache Program is an extension of Page Program, which is executed with 2,112 byte(x8) data registers, and is available only within a block. Since the device has 1 page of cache memory, serial data input may be executed while data stored in data register are programmed into memory cell.

After writing the first set of data up to 2,112 bytes(x8) into the selected cache registers, Cache Program command (15h) instead of actual Page Program (10h) is inputted to make cache registers free and to start internal program operation. To transfer data from cache registers to data registers, the device remains in Busy state for a short period of time (t_{CBSY}) and has its cache registers ready for the next data-input while the internal programming gets started with the data loaded into data registers. Read Status command (70h) may be issued to find out when cache registers become ready by polling the Cache-Busy status bit (I/O6). Pass/fail status of only the previous page is available upon the return to Ready state. When the next set of data is inputted with the Cache Program command, tCBSY is affected by the progress of pending internal programming. The programming of the cache registers is initiated only when the pending program cycle is finished and the data registers are available for the transfer of data from cache registers. The status bit (I/O5) for internal Ready/Busy may be polled to identity the completion of internal programming. If the system monitors the progress of programming only with R/B#, the last page of the target programming sequence must be programmed with actual Page Program command (10h).

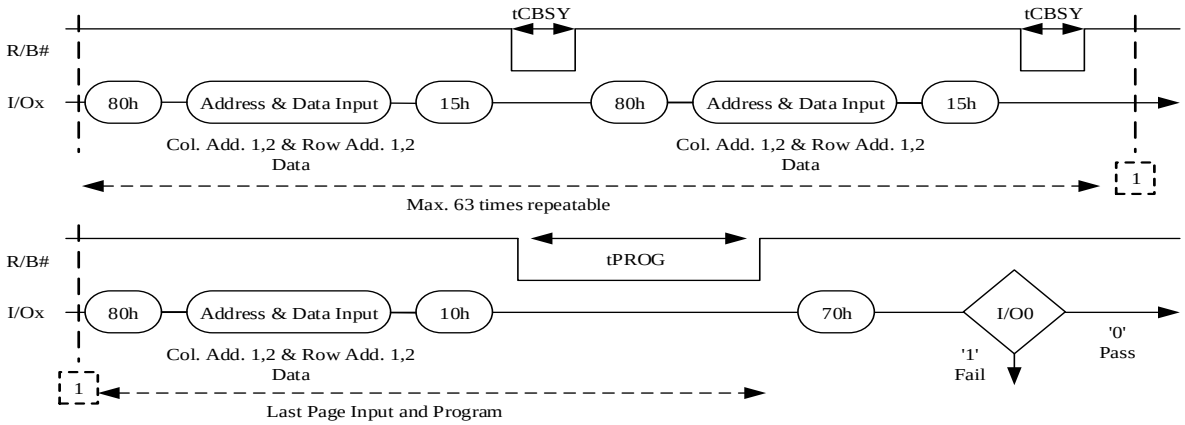

NOTE:

1. Since programming the last page does not employ caching, the program time has to be that of Page Program. However, if the previous program cycle with the cache data has not finished, the actual program cycle of the last page is initiated only after completion of the previous cycle, which can be expressed as the following formula.
2. t_{PROG} = Program time for the last page + Program time for the (last-1)th page – (Program command cycle time + Last page data loading time)

Figure 8.5 Fast Cache Program (Available only within a Block)

8.4 COPY-BACK PROGRAM

Copy-Back Program is designed to efficiently copy data stored in memory cells without time-consuming data reloading when there is no bit error detected in the stored data. The benefit is particularly obvious when a portion of a block is updated and the rest of the block needs to be copied to a newly assigned empty block. Copy-Back operation is a sequential execution of Read for Copy-Back and of Copy-Back Program with Destination address. A Read for Copy-Back operation with “35h” command and the Source address moves the whole 2,112byte data into the internal buffer. The host controller can detect bit errors by sequentially reading the data output. Copy-Back Program is initiated by issuing Page-Copy Data-Input command (85h) with Destination address. If data modification is necessary to correct bit errors and to avoid error propagation, data can be reloaded after the Destination address. Data modification can be repeated multiple times as shown in Figure below. Actual programming operation begins when Program Confirm command (10h) is issued. Once the program process starts, the Read Status command (70h) may be entered to read the status register. The host controller can detect the completion of a program cycle by monitoring the R/B# output, or the Status bit (I/O6) of the Status Register. When the Copy-Back Program is complete, the Status Bit (I/O0) may be checked. The command register remains Read Status mode until another valid command is written to it.

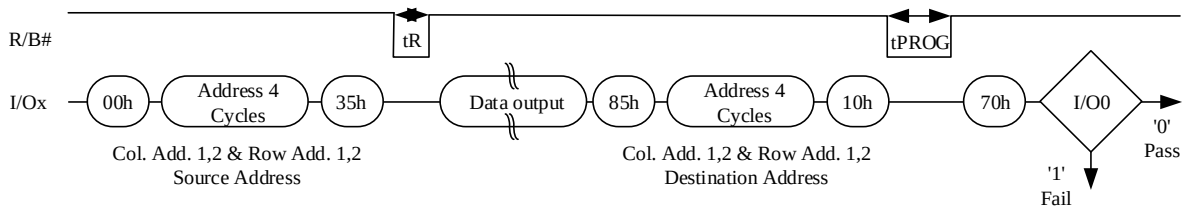

Figure 8.6 Page Copy-Back Program Operation

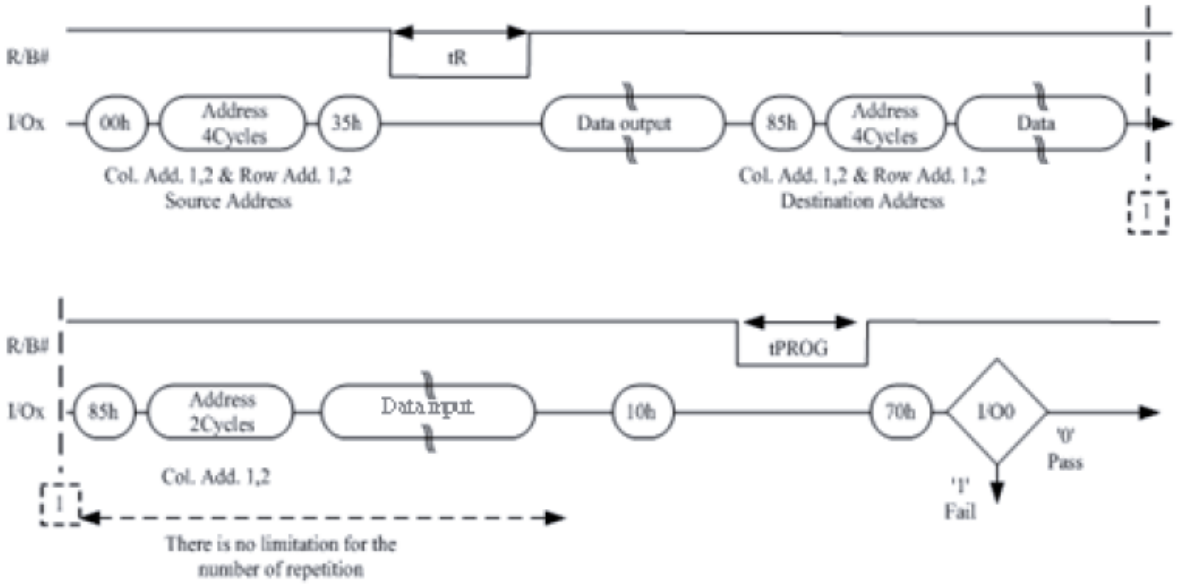

Figure 8.7 Page Copy-Back Program Operation with Random Data Input

8.5 BLOCK ERASE

The block-based Erase operation is initiated by an Erase Setup command (60h), followed by a three-cycle row address, in which only Plane address and Block address are valid while Page address is ignored. The Erase Confirm command (D0h) following the row address starts the internal erasing process. The two-step command sequence is designed to prevent memory content from being inadvertently changed by external noise.

At the rising edge of WE# after the Erase Confirm command input, the internal control logic handles erase and erase-verify. When the erase operation is completed, the host controller can check Status bit (I/O0) to see if the erase operation is successfully done. Figure below illustrates a block erase sequence, and the address input (the first page address of the selected block) is placed in between commands 60h and D0h. After tBERS erase time, the R/B# de-asserts to ready state. Read Status command (70h) can be issued right after D0h to check the execution status of erase operation.

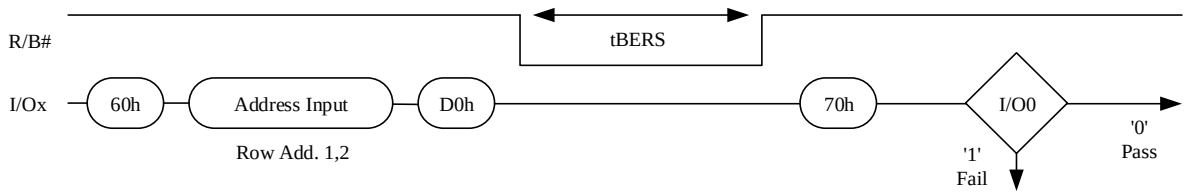

Figure 8.8 Block Erase Operation

8.6 READ STATUS

A status register on the device is used to check whether program or erase operation is completed and whether the operation is completed successfully. After writing 70h command to the command register, a read cycle outputs the content of the status register to I/O pins on the falling edge of CE# or RE#, whichever occurs last. These two commands allow the system to poll the progress of each device in multiple memory connections even when R/B# pins are common-wired. RE# or CE# does not need to toggle for status change.

The command register remains in Read Status mode unless other commands are issued to it. Therefore, if the status register is read during a random read cycle, a read command (00h) is needed to start read cycles.

Table 8.1 Status Register Definition for 70h Command

I/O	Page Program	Block Erase	*Cache Program*	*Read*	Cache Read	Definition
I/O 0	Pass/Fail	Pass/Fail	Pass/Fail(N)	NA	NA	Pass : 0 Fail : 1
I/O 1	NA	NA	Pass/ Fail (N-1)	NA	NA	Don't cared
I/O 2	NA (Pass/Fail,OTP)	NA	NA	NA	NA	Don't cared
I/O 3	NA	NA	NA	NA	NA	Don't cared
I/O 4	NA	NA	NA	NA	NA	Don't cared
I/O 5	NA	NA	True Ready/Busy	NA	True Ready/Busy	Busy : 0 Ready : 1
I/O 6	Ready/Busy	Ready/Busy	Ready/Busy	Ready/Busy	Ready/Busy	Busy : 0 Ready : 1
I/O 7	Write Protect	Write Protect	Write Protect	Write Protect	Write Protect	Protected :0 Not Protected : 1

Notes:
1. I/Os defined NA are recommended to be masked out when Read Status is being executed.
2. N= current page, n-1= previous page.

8.7 READ ID

The device contains a product identification mode, initiated by writing 90h to the command register, followed by an address input of 00h. Five read cycles sequentially output the manufacturer code (C8h), and the device code and 3rd, 4th, 5th cycle ID respectively. The command register remains in Read ID mode until further commands are issued to it.

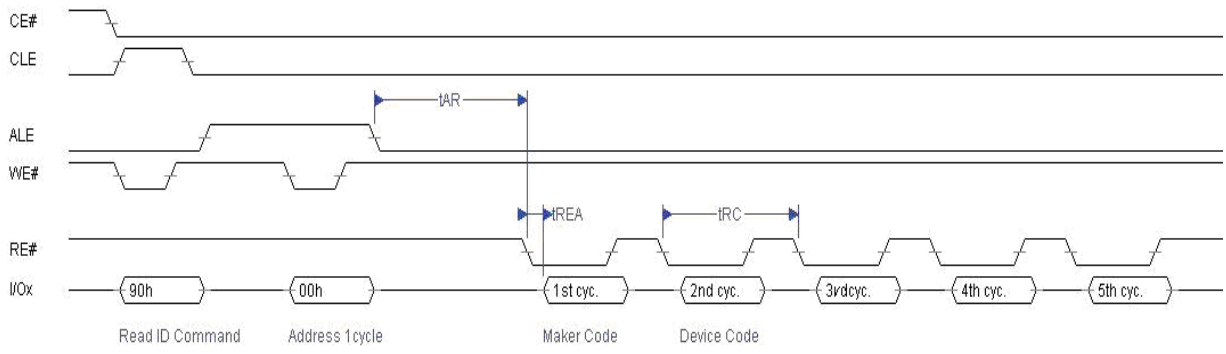

Figure 8.9 Read ID Operation

Table 8.2 ID definition Table

Part No.	1st Cycle (Maker Code)	2nd Cycle (Device Code)	3rd Cycle	4th Cycle	5th Cycle
IS34/35ML01G084(X8)	C8h	D1h	80h	95h	40h

8.8 RESET

The device offers a reset feature, executed by writing FFh to the command register. When the device is in Busy state during random read, program or erase mode, the reset operation will abort these operations. The contents of memory cells being altered are no longer valid, as the data will be partially programmed or erased. The command register is cleared to wait for the next command, and the Status Register is cleared to value C0h when WP# is high. If the device is already in reset state a new reset command will be accepted by the command register. The R/B# pin changes to low for tRST after the Reset command is written. Refer to Figure below.

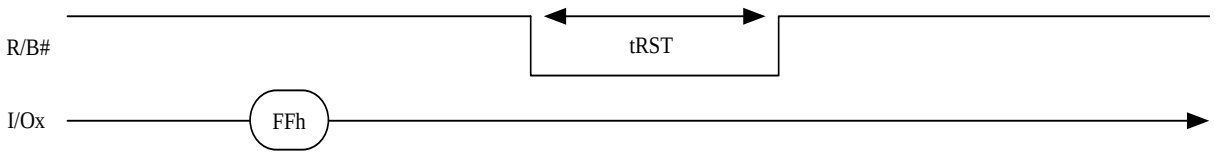

Figure 8.10 Reset Operation

Table 8.3 Device Status Table

	After Power-up	After Reset
Operation Mode	00h Command is latched	Waiting for next command

8.9 CACHE READ

Cache Read is an extension of Page Read, and is available only within a block. The normal Page Read command (00h-30h) is always issued before invoking Cache Read. After issuing the Cache Read command (31h), read data of the designated page (page N) are transferred from data registers to cache registers in a short time period of tDCBSYR, and then data of the next page (page N+1) is transferred to data registers while the data in the cache registers are being read out. Host controller can retrieve continuous data and achieve fast read performance by iterating Cache Read operation. The Read Start for Last Page Cache Read command (3Fh) is used to complete data transfer from memory cells to data registers.

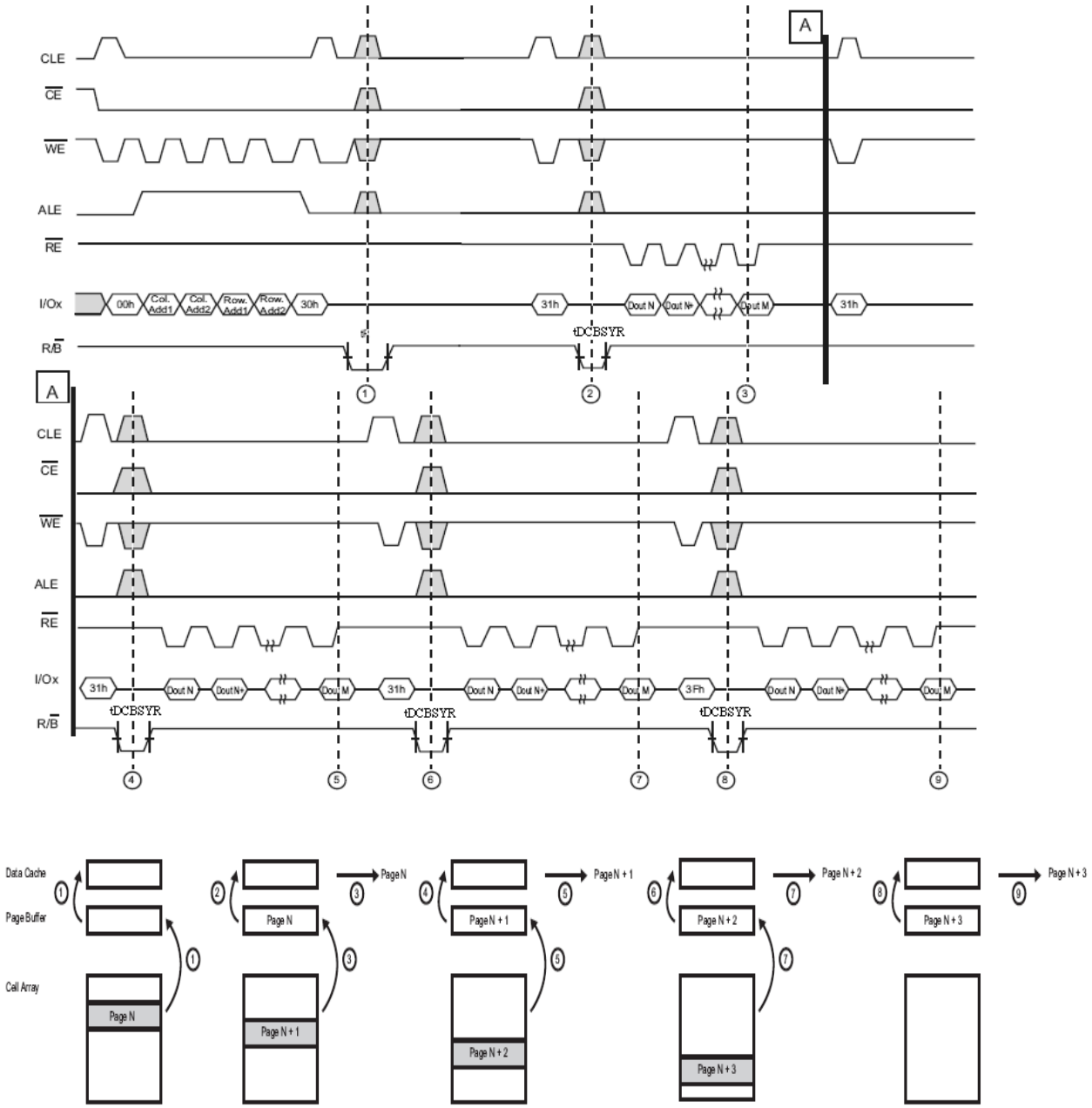

Figure 8.11 Read Operation with Cache Read

8.10 READY/BUSY#

The device has a R/B# output that provides a hardware method of indicating the completion of a page program, erase and random read completion. The R/B# pin is normally high but transition to low after program or erase command is written to the command register or random read is started after address loading. It returns to high when the internal controller has finished the operation. The pin is an open-drain driver thereby allowing two or more R/B# outputs to be Or-tied. Because pull-up resistor value is related to tr(R/B#) and current drain during busy (ibusy) , an appropriate value can be obtained with the following reference chart. Its value can be determined by the following guidance

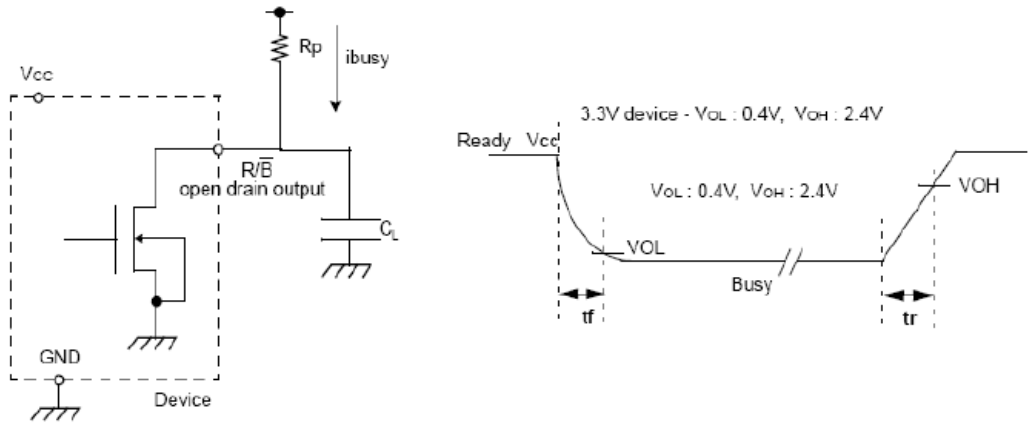

R_P vs t_{RHOH} vs C_L

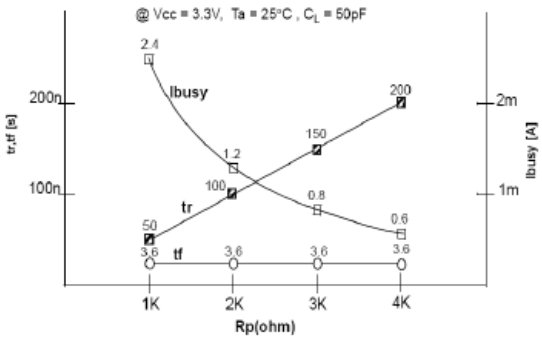

R_P value guidance

$$Rp(min, 3.3V\ part) = \frac{V_{CC}(Max.) - V_{OL}(Max.)}{I_{OL} + \Sigma I_L} = \frac{3.2V}{8mA + \Sigma I_L}$$

where I_L is the sum of the input currents of all devices tied to the R/B# pin.
R_P (max) is determined by maximum permissible limit of tr

Figure 8.12 Ready/Busy# Pin Electrical Specifications

8.11 DATA PROTECTION AND POWER UP SEQUENCE

The timing sequence shown in the figure below is necessary for the power-on/off sequence.

The device internal initialization starts after the power supply reaches an appropriate level in the power on sequence. During the initialization the device R/B# signal indicates the Busy state as shown in the figure below. In this time period, the acceptable commands are 70h.

The WP# signal is useful for protecting against data corruption at power on/off.

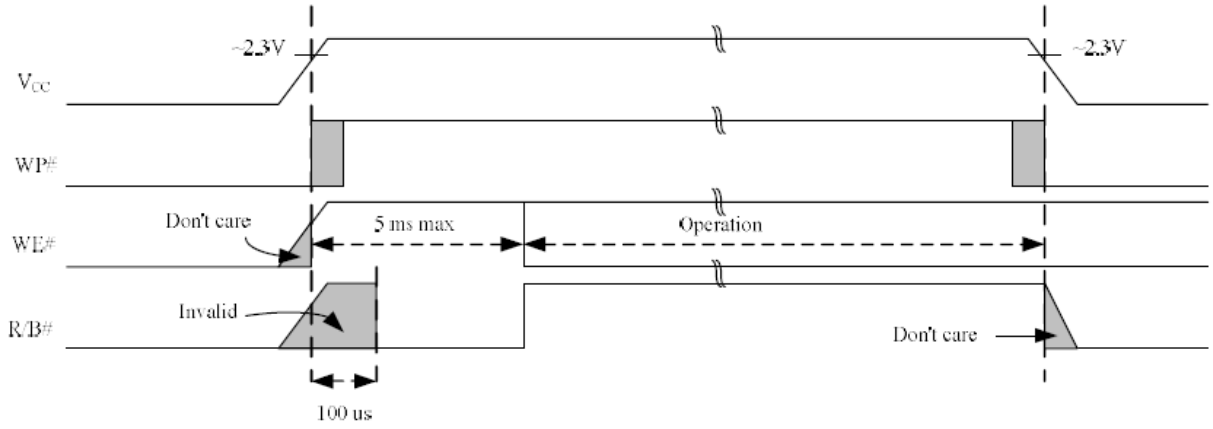

Figure 8.13 AC Waveforms for Power Transition

8.12 WRITE PROTECT OPERATION

Enabling WP# during erase and program busy is prohibited. The erase and program operations are enabled and disabled as follows:

Enable Programming

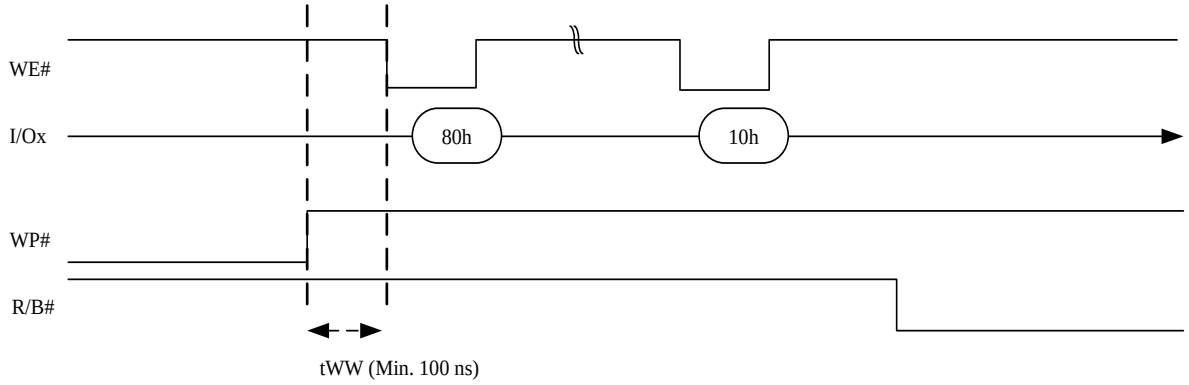

Note: WP# keeps “High” until programming finish

Disable Programming

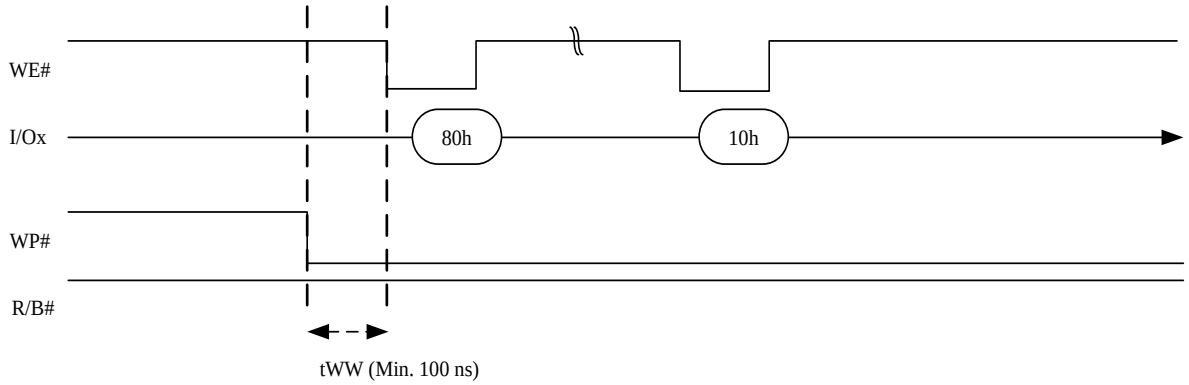

Enable Erasing

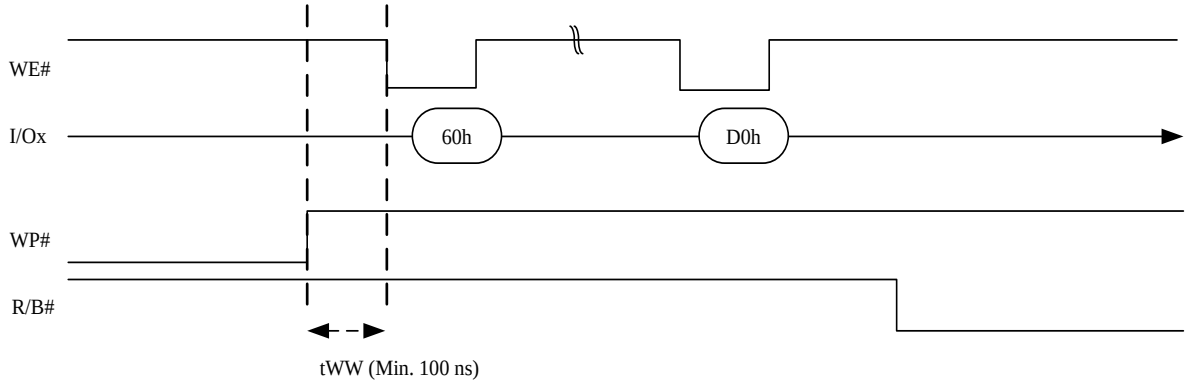

NOTE: WP# keeps “High” until erasing finish

Disable Erasing

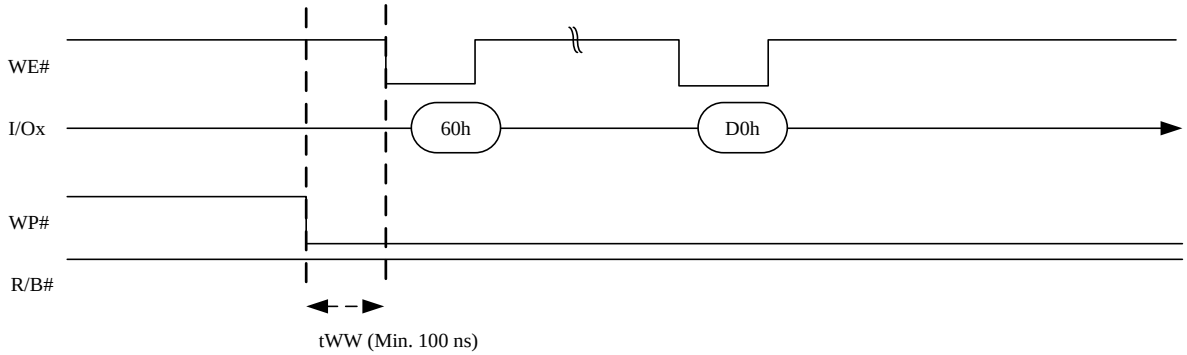

Figure 8.14 Enable/Disable Programming and Enable Erasing

9. INVALID BLOCK AND ERROR MANAGEMENT

9.1 MASK OUT INITIAL INVALID BLOCK(S)

Initial invalid blocks are defined as blocks that contain one or more initial invalid bits whose reliability is not guaranteed by ISSI. The information regarding the initial invalid block(s) is called the initial invalid block information. Devices with initial invalid block(s) have the same quality level as devices with all valid blocks and have the same AC and DC characteristics. An initial invalid block(s) does not affect the performance of valid block(s) because it is isolated from the bit line and the common source line by a select transistor. The system design must be able to mask out the initial invalid block(s) via address mapping.

The 1st block, which is placed on 00h block address, is guaranteed to be a valid block up to 1K program/erase cycles with 4bit/512Byte ECC.

9.2 IDENTIFYING INITIAL INVALID BLOCK(S) AND BLOCK REPLACEMENT MANAGEMENT

Unpredictable behavior may result from programming or erasing the defective blocks. Figure below illustrates an algorithm for searching factory-mapped defects, and the algorithm needs to be executed prior to any erase or program operations.

A host controller has to scan the data at the first byte in the spare area of the first page or second page of each block from block 0 to the last block using page read command.

Any block where the 1st byte in the spare area of the first or second page does not contain “FFh” is an invalid block.

Do not erase or program factory-marked bad blocks. The host controller must be able to recognize the initial invalid block information and to create a corresponding table to manage block replacement upon erase or program error when additional invalid blocks develop with Flash memory usage.

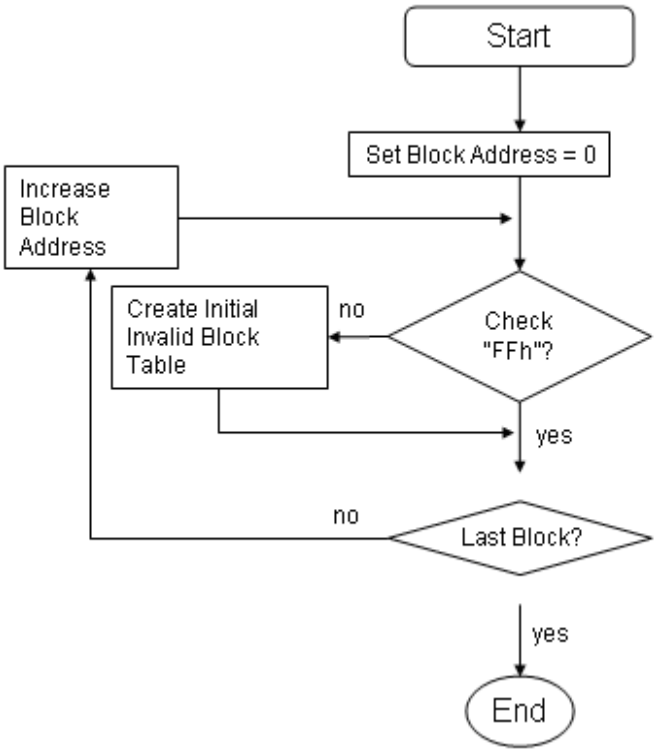

Check for “FFh” at the first byte in the spare area of the first page or second page of each block.

Figure 9.1 Algorithm for Bad Block Scanning

9.3 ERROR IN READ OR WRITE OPERATION

Within its lifetime, additional invalid blocks may develop with NAND Flash memory. Refer to the qualification report for the actual data. The following possible failure modes should be considered to implement a highly reliable system. In the case of status read failure after erase or program, block replacement should be done. Because program status fail during a page program does not affect the data of the other pages in the same block, block replacement can be executed with a page-sized buffer by finding an erased empty block and reprogramming the current target data and copying the rest of the replaced block. In case of Read, ECC must be employed. To improve the efficiency of memory space, it is recommended that the read or verification failure due to single bit error be reclaimed by ECC without any block replacement. The additional block failure rate does not include those reclaimed blocks.

Failure Mode		Detection and Countermeasure Sequence
Write	Erase failure	Read Status after Erase → Block Replacement
	Program failure	Read Status after Program → Block Replacement
Read	Up to 4 bit failure	Verify ECC → ECC Correction

Note: Error Correcting Code → RS Code or BCH Code etc.
Example: 4bit correction / 512 Byte

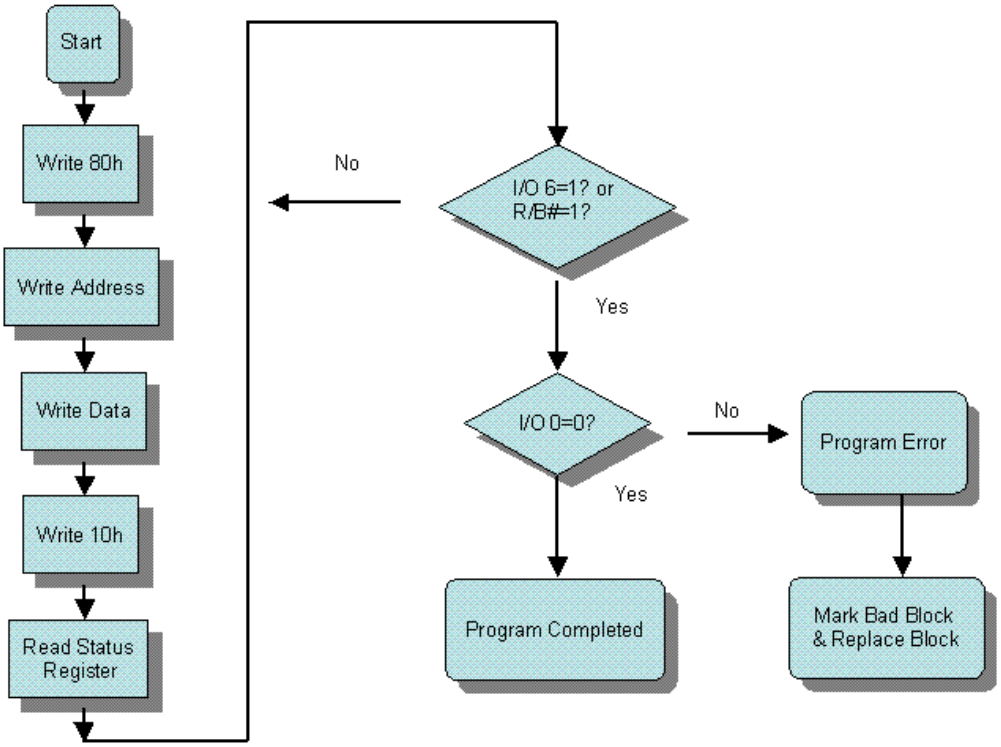

Figure 9.2 Program Flow Chart

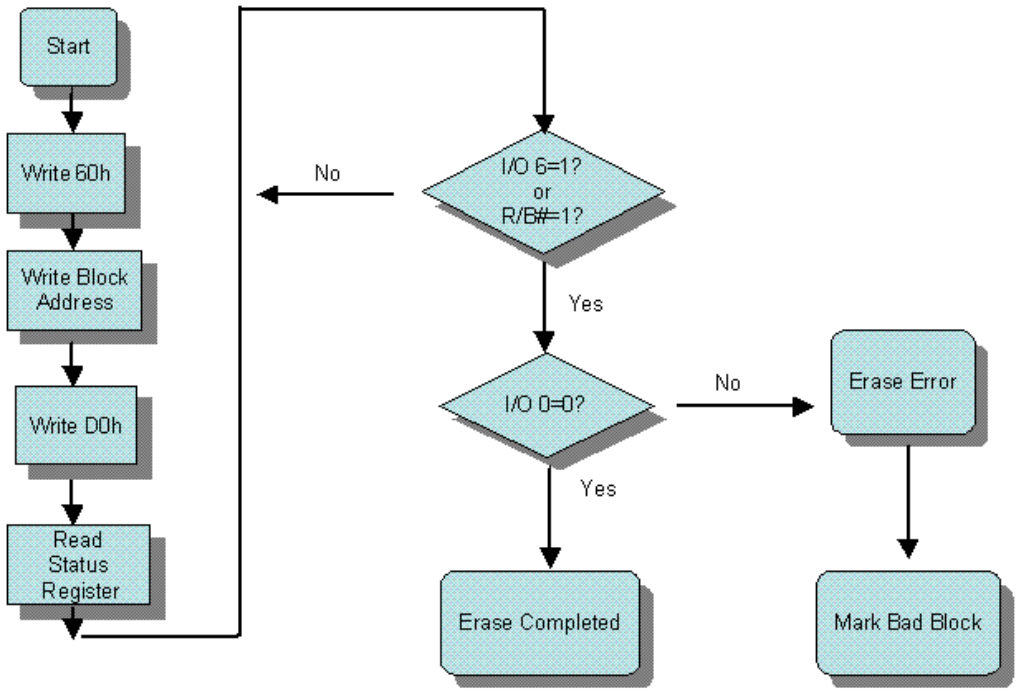

Figure 9.3 Erase Flow Chart

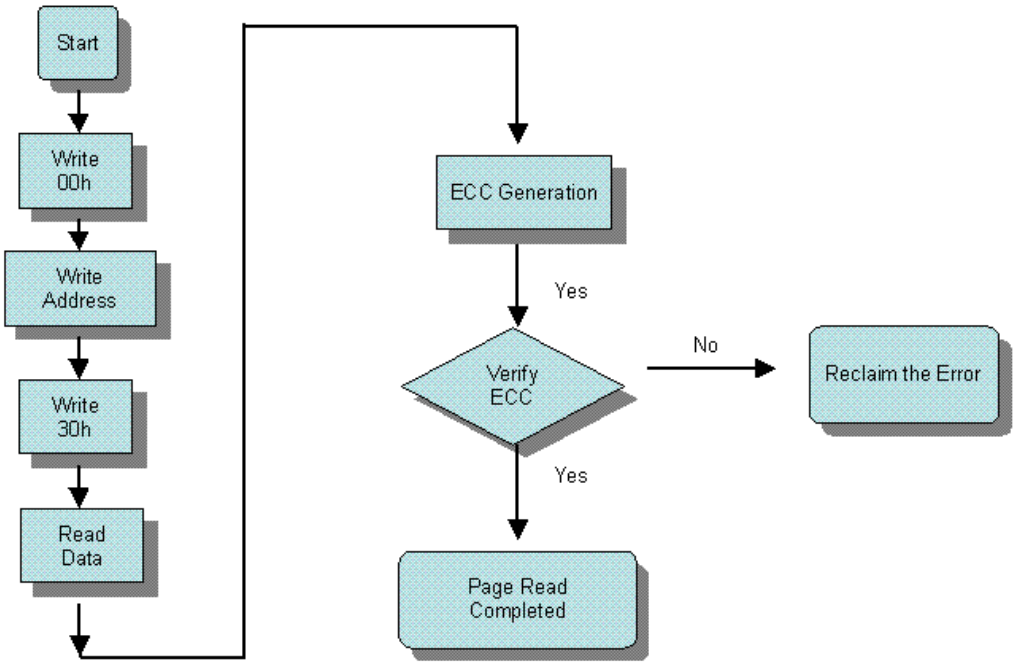

Figure 9.4 Read Flow Chart

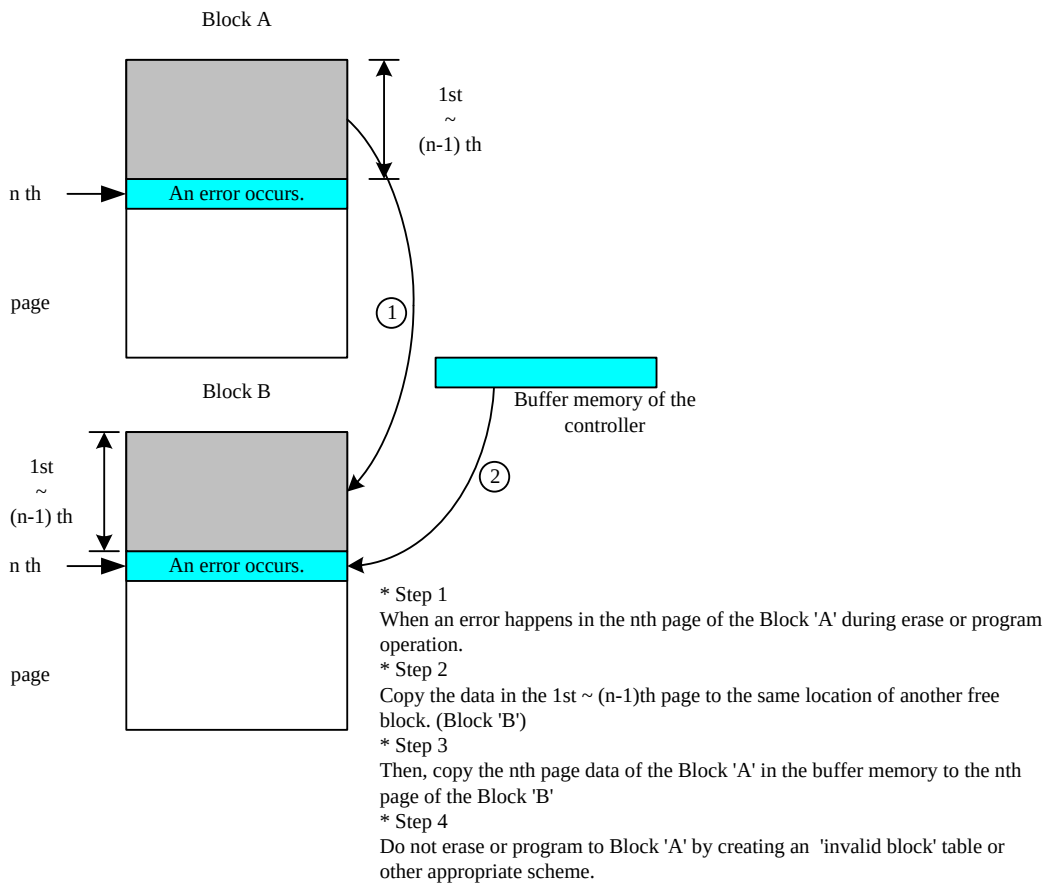

Figure 9.5 Blcok Replacement

9.4 ADDRESSING FOR PROGRAM OPERATION

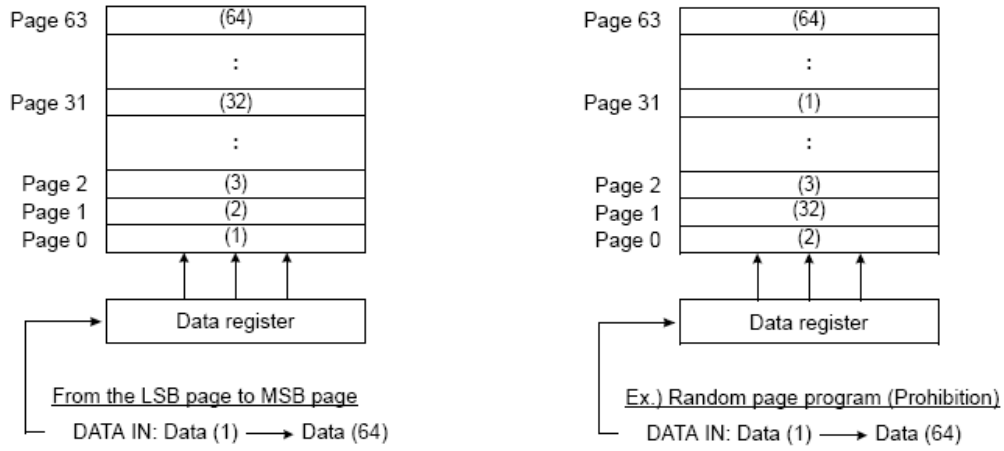

Figure 9.6 Addressing for Program Operation

9.5 SYSTEM INTERFACE USING CE# NOT CARE OPERATION

For an easier system interface, CE# may be inactive during the data-loading or serial access as shown below. The internal 2,112byte data registers are utilized as separate buffers for this operation and the system design gets more flexible. In addition, for voice or audio applications that use slow cycle time on the order of µ-seconds, de-activating CE# during the data-loading and serial access would provide significant savings in power consumption.

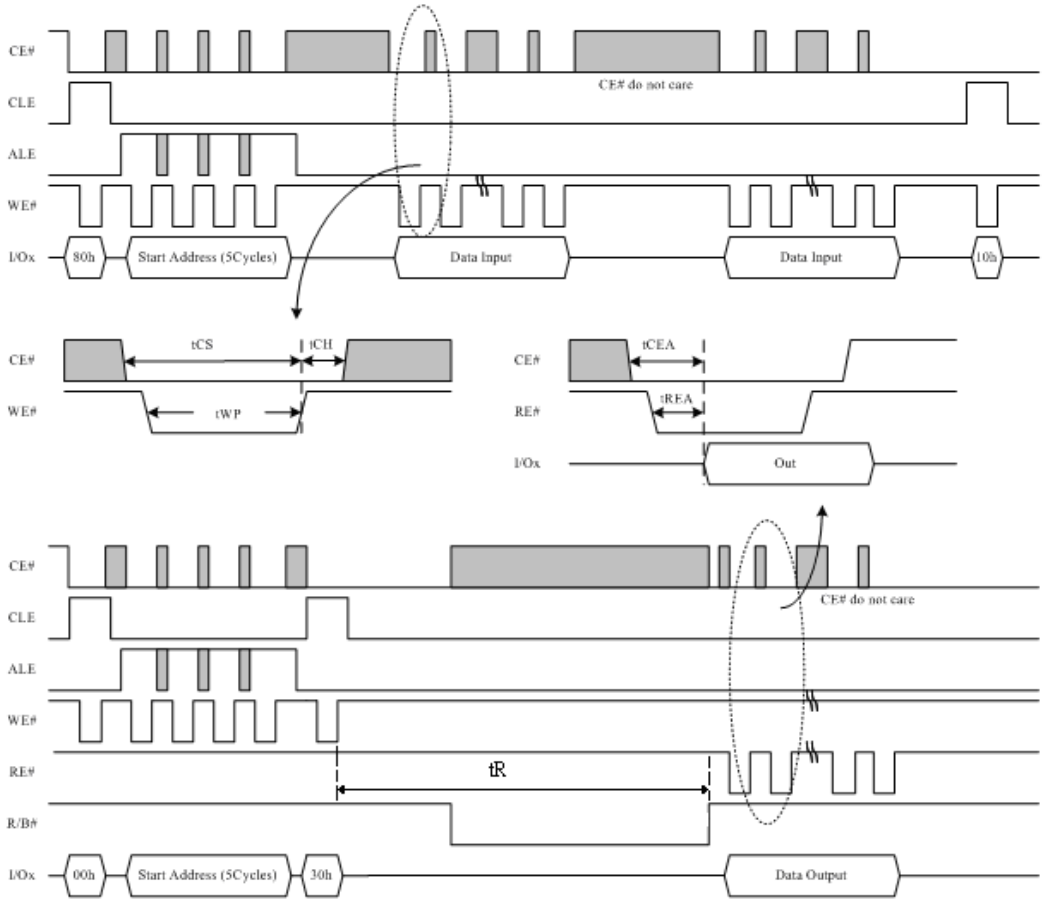

Figure 9.7 Program/Read-Operation with CE# Not-Care Operation

Address Information

Device	Data	I/O	Address			
	Data In/Out	I/Ox	Col. Add1	Col. Add2	Row Add1	Row Add2
IS34/35ML01G084	2,112Byte	I/O 0~I/O 7	A0 ~ A7	A8 ~ A11	A12 ~ A19	A20 ~ A27

10. PACKAGE TYPE INFORMATION

10.1 48-PIN TSOP (TYPE I) PACKAGE (T)

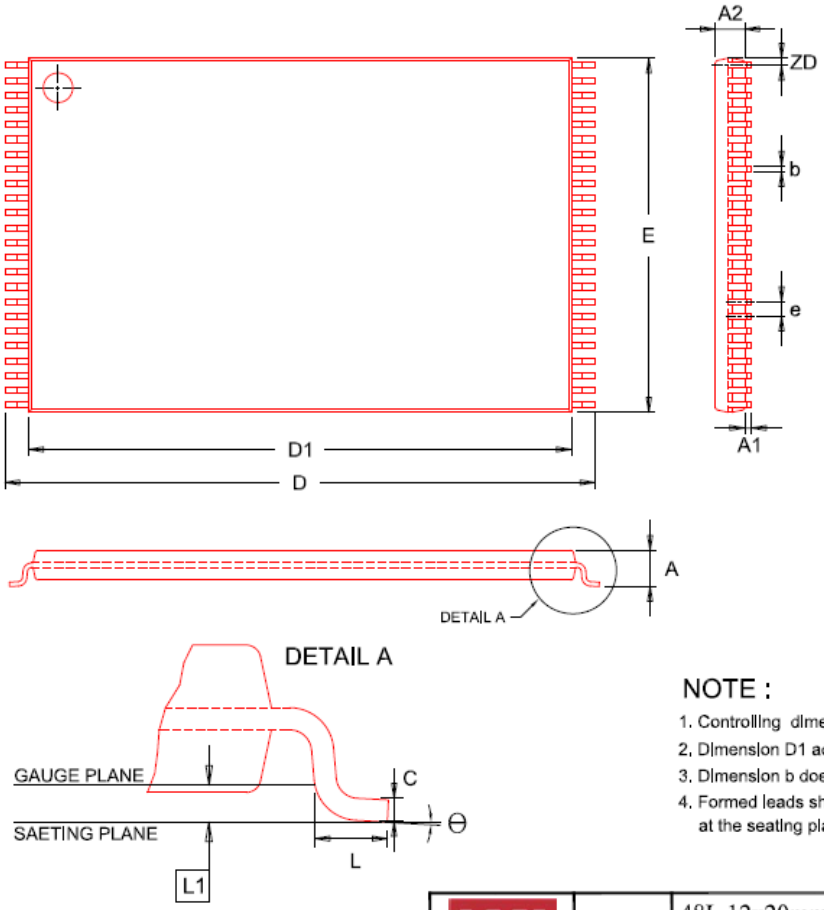

SYMBOL	DIMENSION IN MM		
	MIN	NOM	MAX
A	—	—	1.20
A1	0.05	—	0.15
b	0.17	0.22	0.27
C	0.10	—	0.21
D	19.80	20.00	20.20
D1	18.20	18.40	18.60
E	11.80	12.00	12.20
e	0.50 BSC.		
L	0.50	0.60	0.70
L1	0.25 BSC.		
ZD	0.25 REF.		
Θ	0	3°	5°

NOTE :

1. Controlling dimension : mm
2. Dimension D1 adn E do not include mold protrusion ,
3. Dimension b does not include dambar protrusion/intrusion.
4. Formed leads shall be planar with respect to one another within 0.1mm at the seating plane after final test.

ISSI	TITLE	48L 12x20mm TSOP-1 Package Outline	REV.	C	DATE	02/17/2017

10.2 63-BALL VFBGA PACKAGE (B)

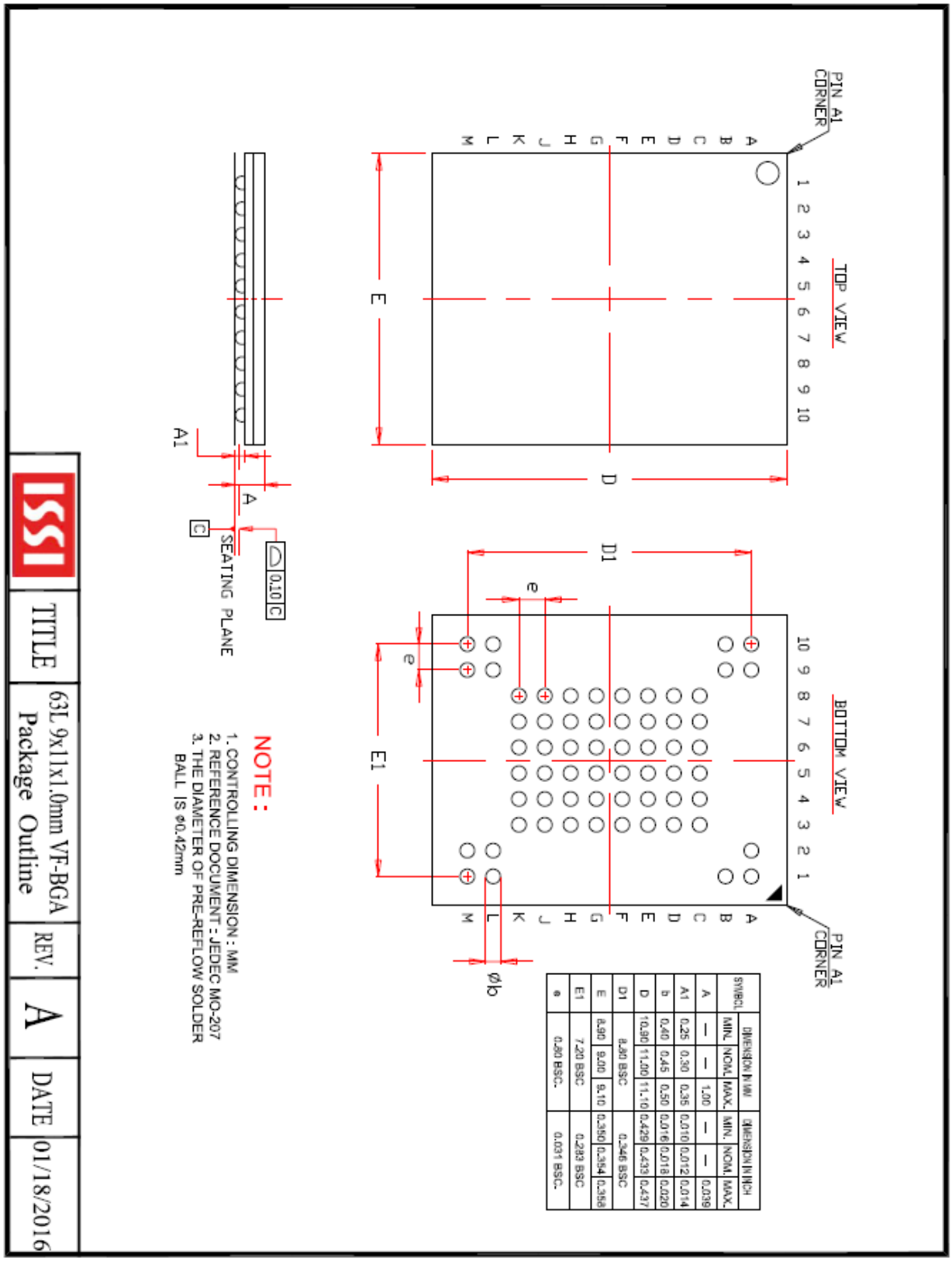

SYMBOL	DIMENSION IN MM			DIMENSION IN INCH		
	MIN.	NOM.	MAX.	MIN.	NOM.	MAX.
A	—	—	1.00	—	—	0.039
A1	0.25	0.30	0.35	0.010	0.012	0.014
b	0.40	0.45	0.50	0.016	0.018	0.020
D	10.90	11.00	11.10	0.429	0.433	0.437
D1	8.80 BSC			0.346 BSC		
E	8.90	9.00	9.10	0.350	0.354	0.358
E1	7.20 BSC			0.283 BSC		
e	0.80 BSC.			0.031 BSC.		

11. ORDERING INFORMATION – Valid Part Numbers

IS 34 M L 01G 08 4 _ - T L I

TEMPERATURE RANGE
I = Industrial (-40°C to +85°C)
E = Industrial (-40°C to +105°C)
A1 = Automotive Grade (-40°C to +85°C)
A2 = Automotive Grade (-40°C to +105°C)

PACKAGING CONTENT
L = **RoHS compliant**

PACKAGE Type
T = 48-pin TSOP (Type I)
B = 63-ball VFBGA

Die Revision
Blank = First Gen.

ECC Requirement
4 = 4-bit ECC

Bus Width
08 = x8 NAND

Density
01G = 1 Gigabit

VDD
L = 3.3V

Technology
M = Standard NAND (SLC)

Product Family
34 = NAND
35 = Automotive NAND

BASE PART NUMBER
IS = Integrated Silicon Solution Inc.

VDD	Density	Bus	Temp. Grade	Order Part Number	Package
3.3V	1Gb	X8	Industrial	IS34ML01G084-TLI	48-pin TSOP (Type I)
				IS34ML01G084-BLI	63-ball VFBGA
			Extended	IS34ML01G084-TLE	48-pin TSOP (Type I)
				IS34ML01G084-BLE	63-ball VFBGA
			Automotive (A1)[1]	IS35ML01G084-TLA1	48-pin TSOP (Type I)
				IS35ML01G084-BLA1	63-ball VFBGA
			Automotive (A2)[1]	IS35ML01G084-TLA2	48-pin TSOP (Type I)
				IS35ML01G084-BLA2	63-ball VFBGA

Note:
1. Automotive Grade meets AEC-Q100 requirements with PPAP.
Temp Grades: A1= -40 to 85°C, A2= -40 to 105°C