# TRB245

Copyright © 2024, UAB TELTONIKA NETWORKS. Specifications and information given in this document are subject to change by UAB TELTONIKA NETWORKS without prior notice.

sales@prom-elec.com / ООО ПРОМЭЛЕКТРОНИКА

# HARDWARE

## FRONT VIEW

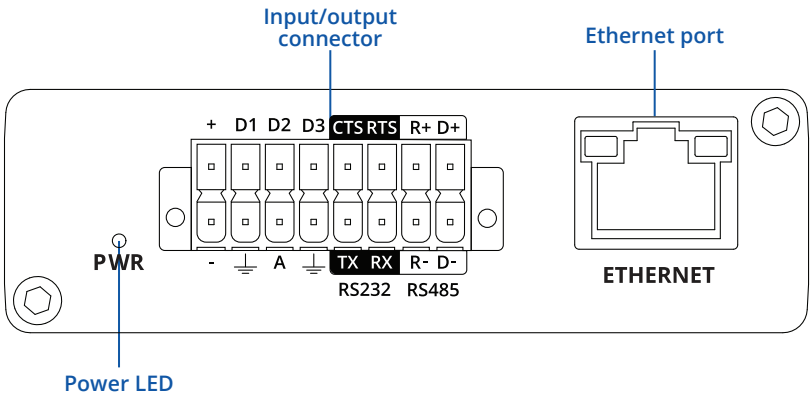


## BACK VIEW

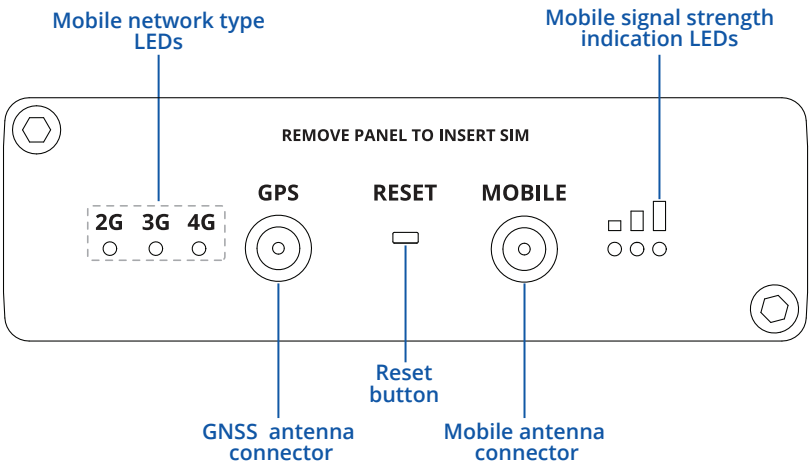


## INPUT/OUTPUT 16 PIN CONNECTOR PINOUT

**D1, D2, D3** - Configurable digital Input/Output pins. Open collector output, max output 30 V, 300 mA or Digital input where 0-6 V detected as logic low and 8-30 V – logic high.
**+** - 9-30 VDC positive power pin
**CTS** - RS232 clear data to send pin (output).
**RTS** - RS232 request data to send pin (input).
**R+** - RS485 receiver positive signal pin.
**D+** - RS485 driver positive signal pin.
**-** - Negative/ground power pin.
⏚ - Ground pins for D1, D2, D3, A, RS232 and RS485.
**A** - Analog input pin. Analog voltage range 0-30 V.
**TX** - RS232 transmitted data (input).
**RX** - RS232 received data (output).
**R-** - RS485 receiver negative signal.
**D-** - RS485 driver negative signal.

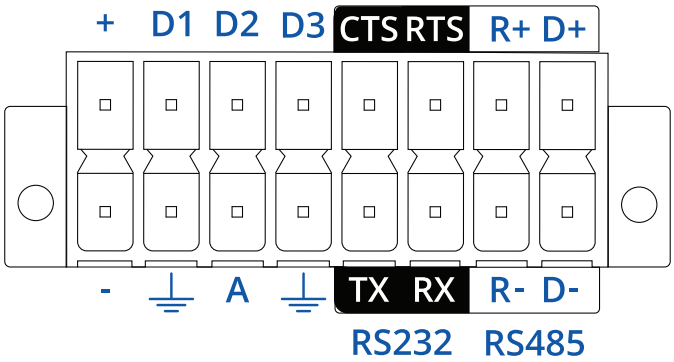


Copyright © 2024, UAB TELTONIKA NETWORKS. Specifications and information given in this document are subject to change by UAB TELTONIKA NETWORKS without prior notice.

# FEATURES

## MOBILE

| | |
|---|---|
| Mobile module | 4G LTE Cat 4 up to 150 DL/50 UL Mbps; 3G up to 21 DL/5.76 UL Mbps; 2G up to 236.8 DL/236.8 UL kbps |
| SIM switch | 2 SIM cards, auto-switch cases: weak signal, data limit, SMS limit, roaming, no network, network denied, data connection fail, SIM idle protection |
| Status | IMSI, ICCID, operator, operator state, data connection state, network type, bandwidth, connected band, signal strength (RSSI), SINR, RSRP, RSRQ, EC/IO, RSCP, data sent/received, LAC, TAC, cell ID, ARFCN, UARFCN, EARFCN, MCC, and MNC |
| SMS | SMS status, SMS configuration, send/read SMS via HTTP POST/GET, EMAIL to SMS, SMS to EMAIL, SMS to HTTP, SMS to SMS, scheduled SMS, SMS autoreply, SMPP |
| USSD | Supports sending and reading Unstructured Supplementary Service Data messages |
| Black/White list | Operator black/white list (by country or separate operators) |
| Multiple PDN | Possibility to use different PDNs for multiple network access and services |
| Band management | Band lock, Used band status display |
| SIM idle protection service | When working with devices with two SIM slots, the one not currently in use will remain idle until the device switches to it, meaning that no data is used on the card until then |
| APN | Auto APN |
| Bridge | Direct connection (bridge) between mobile ISP and device on LAN |
| Passthrough | Gateway assigns its mobile WAN IP address to another device on LAN |

## ETHERNET

| | |
|---|---|
| Ethernet | 1 x ETH port, 10/100 Mbps, compliance with IEEE 802.3, IEEE 802.3u standards, supports auto MDI/MDIX |

## NETWORK

| | |
|---|---|
| Routing | Static routing, Dynamic routing (BGP, OSPF v2, RIP v1/v2, EIGRP, NHRP), Policy based routing |
| Network protocols | TCP, UDP, IPv4, IPv6, ICMP, NTP, DNS, HTTP, HTTPS, SFTP, FTP, SMTP, SSL/TLS, ARP, VRRP, PPP, PPPoE, UPNP, SSH, DHCP, Telnet, SMPP, SNMP, MQTT, Wake On Lan (WOL) |
| VoIP passthrough support | H.323 and SIP-alg protocol NAT helpers, allowing proper routing of VoIP packets |
| Connection monitoring | Ping Reboot, Wget Reboot, Periodic Reboot, LCP and ICMP for link inspection |
| Firewall | Port forward, traffic rules, custom rules |
| Firewall status page | View all your Firewall statistics, rules, and rule counters |
| Ports management | View device ports, enable and disable each of them, turn auto-configuration on or off, change their transmission speed, and so on |
| Network topology | Visual representation of your network, showing which devices are connected to which other devices |
| Hotspot | Captive portal (hotspot), internal/external Radius server, Radius MAC authentication, SMS authorisation, SSO authentication, internal/external landing page, walled garden, user scripts, URL parameters, user groups, individual user or group limitations, user management, 9 default customisable themes and optionality to upload and download customised hotspot themes |
| DHCP | Static and dynamic IP allocation, DHCP relay, DHCP server configuration, status, static leases: MAC with wildcards |
| QoS / Smart Queue Management (SQM) | Traffic priority queuing by source/destination, service, protocol or port, WMM, 802.11e |
| DDNS | Supported >25 service providers, others can be configured manually |
| Network backup | Mobile, VRRP, Wired options, each of which can be used as an automatic Failover |
| SSHFS | Possibility to mount remote file system via SSH protocol |

## SECURITY

| | |
|---|---|
| Authentication | Pre-shared key, digital certificates, X.509 certificates, TACACS+, Internal & External RADIUS users authentication, IP & login attempts block, time-based login blocking, built-in random password generator |
| Firewall | Pre-configured firewall rules can be enabled via WebUI, unlimited firewall configuration via CLI; DMZ; NAT; NAT-T |
| Attack prevention | DDOS prevention (SYN flood protection, SSH attack prevention, HTTP/HTTPS attack prevention), port scan prevention (SYN-FIN, SYN-RST, X-mas, NULL flags, FIN scan attacks) |
| VLAN | Port and tag-based VLAN separation |
| Mobile quota control | Mobile data limit, customizable period, start time, warning limit, phone number |
| WEB filter | Blacklist for blocking out unwanted websites, Whitelist for specifying allowed sites only |
| Access control | Flexible access control of SSH, Web interface, CLI and Telnet |

Copyright © 2024, UAB TELTONIKA NETWORKS. Specifications and information given in this document are subject to change by UAB TELTONIKA NETWORKS without prior notice.

## VPN

| | |
|---|---|
| OpenVPN | Multiple clients and a server can run simultaneously, 27 encryption methods |
| OpenVPN Encryption | DES-CBC 64, RC2-CBC 128, DES-EDE-CBC 128, DES-EDE3-CBC 192, DESX-CBC 192, BF-CBC 128, RC2-40-CBC 40, CAST5-CBC 128, RC2-64-CBC 64, AES-128-CBC 128, AES-128-CFB 128, AES-128-CFB1 128, AES-128-CFB8 128, AES-128-OFB 128, AES-128-GCM 128, AES-192-CFB 192, AES-192-CFB1 192, AES-192-CFB8 192, AES-192-OFB 192, AES-192-CBC 192, AES-192-GCM 192, AES-256-GCM 256, AES-256-CFB 256, AES-256-CFB1 256, AES-256-CFB8 256, AES-256-OFB 256, AES-256-CBC 256 |
| IPsec | XFRM, IKEv1, IKEv2, with 14 encryption methods for IPsec (3DES, DES, AES128, AES192, AES256, AES128GCM8, AES192GCM8, AES256GCM8, AES128GCM12, AES192GCM12, AES256GCM12, AES128GCM16, AES192GCM16, AES256GCM16) |
| GRE | GRE tunnel, GRE tunnel over IPsec support |
| PPTP, L2TP | Client/Server instances can run simultaneously, L2TPv3, L2TP over IPsec support |
| Stunnel | Proxy designed to add TLS encryption functionality to existing clients and servers without any changes in the program's code |
| DMVPN | Method of building scalable IPsec VPNs |
| SSTP | SSTP client instance support |
| ZeroTier | ZeroTier VPN client support |
| WireGuard | WireGuard VPN client and server support |
| Tinc | Tinc offers encryption, authentication and compression in it's tunnels. Client and server support |

## BACNET

| | |
|---|---|
| Supported modes | Router |
| Supported connection types | RS485, TCP |

## OPC UA

| | |
|---|---|
| Supported modes | Client, Server |
| Supported connection types | TCP |

## MODBUS

| | |
|---|---|
| Supported modes | Server, Client |
| Supported connection types | RTU (RS232, RS485), TCP |
| Custom registers | MODBUS TCP custom register block requests, which read/write to a file inside the router, and can be used to extend MODBUS TCP Client functionality |
| Supported data formats | 8-bit: INT, UINT; 16-bit: INT, UINT (MSB or LSB first); 32-bit: float, INT, UINT (ABCD (big-endian), DCBA (little-endian), CDAB, BADC), HEX, ASCII |

## DATA TO SERVER

| | |
|---|---|
| Protocol | HTTP(S), MQTT, Azure MQTT, Kinesis |
| Data to server | Extract parameters from multiple sources and different protocols, and send them all to a single server; Custom LUA scripting, allowing scripts to utilize the router's Data to server feature |

## MQTT GATEWAY

| | |
|---|---|
| Modbus MQTT Gateway | Allows sending commands and receiving data from MODBUS Server through MQTT broker |

## DNP3

| | |
|---|---|
| Supported modes | TCP Master, DNP3 Outstation, RTU Master |

## DLMS

| | |
|---|---|
| DLMS Support | DLMS - standard protocol for utility meter data exchange |

## API

| | |
|---|---|
| Teltonika Networks Web API (beta) support | Expand your device's possibilities by using a set of configurable API endpoints to retrieve or change data. For more information, please refer to this documentation: https://developers.teltonika-networks.com |

## MONITORING & MANAGEMENT

| | |
|---|---|
| WEB UI | HTTP/HTTPS, status, configuration, FW update, CLI, troubleshoot, multiple event log servers, firmware update availability notifications, event log, system log, kernel log, Internet status |
| FOTA | Firmware update from server, automatic notification |
| SSH | SSH (v1, v2) |
| SMS | SMS status, SMS configuration, send/read SMS via HTTP POST/GET |
| Call | Reboot, Status, Mobile data on/off, Output on/off, answer/hang-up with a timer |
| TR-069 | OpenACS, EasyCwmp, ACSLite, tGem, LibreACS, GenieACS, FreeACS, LibCWMP, Friendly tech, AVSystem |
| MQTT | MQTT Broker, MQTT publisher |
| SNMP | SNMP (v1, v2, v3), SNMP Trap, Brute force protection |
| JSON-RPC | Management API over HTTP/HTTPS |
| RMS | Teltonika Remote Management System (RMS) |

Copyright © 2024, UAB TELTONIKA NETWORKS. Specifications and information given in this document are subject to change by UAB TELTONIKA NETWORKS without prior notice.

## IOT PLATFORMS

| | |
|---|---|
| Cloud of Things | Allows monitoring of: Device data, Mobile data, Network info, Availability |
| ThingWorx | Allows monitoring of: WAN Type, WAN IP, Mobile Operator Name, Mobile Signal Strength, Mobile Network Type |
| Cumulocity | Allows monitoring of: Device Model, Revision and Serial Number, WAN Type and IP, Mobile Cell ID, ICCID, IMEI, Connection Type, Operator, Signal Strength |
| Azure IoT Hub | Can be configured with Data to Server to send all the available parameters to the cloud. Has Direct method support which allows to execute RutOS API calls on the IoT Hub. Also has Plug and Play integration with Device Provisioning Service that allows zero-touch device provisioning to IoT Hubs |

## SYSTEM CHARACTERISTICS

| | |
|---|---|
| CPU | Qualcomm, MIPS 24kc, 650 MHz |
| RAM | 64 MB, DDR2 |
| FLASH storage | 16 MB, SPI Flash |

## FIRMWARE / CONFIGURATION

| | |
|---|---|
| WEB UI | Update FW from file, check FW on server, configuration profiles, configuration backup |
| FOTA | Update FW |
| RMS | Update FW/configuration for multiple devices at once |
| Keep settings | Update FW without losing current configuration |
| Factory settings reset | A full factory reset restores all system settings, including the IP address, PIN, and user data to the default manufacturer's configuration |

## FIRMWARE CUSTOMISATION

| | |
|---|---|
| Operating system | RutOS (OpenWrt based Linux OS) |
| Supported languages | Busybox shell, Lua, C, C++ |
| Development tools | SDK package with build environment provided |
| GPL customization | You can create your own custom, branded firmware and web page application by changing colours, logos, and other elements in our firmware to fit your or your clients' needs |

## LOCATION TRACKING

| | |
|---|---|
| GNSS | GPS, GLONASS, BeiDou, Galileo and QZSS |
| Coordinates | GNSS coordinates via WebUI, SMS, TAVL, RMS |
| NMEA | NMEA 0183 |
| NTRIP | NTRIP protocol (Networked Transport of RTCM via Internet Protocol) |
| Server software | Supported server software TAVL, RMS |
| Geofencing | Configurable multiple geofence zones |
| Tracking sensitivity | -157 dBm |
| Position Accuracy | 2.5m CEP |

## SERIAL

| | |
|---|---|
| RS232 | Terminal block connector: TX, RX, RTS, CTS |
| RS485 | Terminal block connector: D+, D-, R+, R- (2 or 4 wire interface) |
| Serial functions | Console, Serial over IP, Modem, MODBUS gateway, NTRIP Client |

## INPUT / OUTPUT

| | |
|---|---|
| Input | 3x Configurable Digital Inputs, 0 - 6 V detected as logic low, 8 - 30 V detected as logic high, 1x Analog input (0 - 30 V) |
| Output | 3x Configurable Digital Outputs, Open collector output, max output 30 V, 300 mA |
| Events | Email, RMS, SMS |
| I/O juggler | Allows to set certain I/O conditions to initiate event |

## POWER

| | |
|---|---|
| Connector | 2 pins in 16-pin industrial terminal block |
| Input voltage range | 9 – 30 VDC, reverse polarity protection, surge protection +/-1 kV 50 µs max |
| Power consumption | Idle: < 1.2 W, Max: < 5 W |

## PHYSICAL INTERFACES

| | |
|---|---|
| Ethernet | 1 x RJ45 port, 10/100 Mbps |
| I/O's | 3 x Configurable I/O, 1 x Analog input in 16-pin terminal block |
| Status LEDs | 3 x connection status LEDs, 3 x connection strength LEDs, 1 x power LED, 1 x Eth port status LED |
| SIM | 2 x SIM slots (Mini SIM – 2FF), 1.8 V/3 V, double stacked SIM tray |
| Power | 1 x 16-pin terminal block |
| Antennas | 1 x SMA connector for LTE, 1 x SMA connector for GNSS |
| RS232 | 4-pin in 16-pin terminal block (TX, RX, RTS, CTS) |
| RS485 | 4-pin in 16-pin terminal block (D+, D-, R+, R-) |
| Reset | Reboot/User default reset/Factory reset button |

Copyright © 2024, UAB TELTONIKA NETWORKS. Specifications and information given in this document are subject to change by UAB TELTONIKA NETWORKS without prior notice.

## PHYSICAL SPECIFICATION

| | |
|---|---|
| Casing material | Aluminium housing |
| Dimensions (W x H x D) | 83 x 25 x 74.2 mm |
| Weight | 165 g |
| Mounting options | DIN rail, wall mount, flat surface (all require additional kit) |

## OPERATING ENVIRONMENT

| | |
|---|---|
| Operating temperature | -40 °C to 75 °C |
| Operating humidity | 10% to 90% non-condensing |
| Ingress Protection Rating | IP30 |

## REGULATORY & TYPE APPROVALS

| | |
|---|---|
| Regulatory | CE, UKCA, EAC, UCRF, CITC, Kenya, ICASA, FCC, IC, Giteki, NTC |

## EMC EMISSIONS & IMMUNITY

| | |
|---|---|
| Standards | EN 55032:2015/AC:2016<br>EN 55035:2017<br>EN IEC 61000-3-2:2019<br>EN 61000-3-3:2013 + A1:2019<br>EN 301 489-1 V2.2.3<br>EN 301 489-19 V2.1.1<br>Draft EN 301 489-52 V1.1.0 |
| ESD | EN 61000-4-2:2009 |
| Radiated Immunity | EN IEC 61000-4-3:2006 + A1:2008 + A2:2010 |
| EFT | EN 61000-4-4:2012 |
| Surge immunity (AC Power Line) | EN 61000-4-5:2014 + A1:2017 |
| CS | EN 61000-4-6:2014 |
| DIP | EN 61000-4-11:2004 + A1:2017 |

## RF

| | |
|---|---|
| Standards | EN 303 413 V1.1.1<br>EN 301 511 V12.5.1<br>EN 301 908-1 V13.1.1<br>EN 301 908-2 V13.1.1<br>EN 301 908-13 V13.1.1 |

## SAFETY

| | |
|---|---|
| Standards | CE: EN 62368-1:2014 + A11:2017, EN IEC 62232:2017, EN 50385:2017<br>RCM: AS/NZS 62368.1:2018 |

Copyright © 2024, UAB TELTONIKA NETWORKS. Specifications and information given in this document are subject to change by UAB TELTONIKA NETWORKS without prior notice.

# STANDARD PACKAGE*

- Gateway TRB245
- 9 W PSU
- 1x Mobile antenna (swivel, SMA male)
- 1x GNSS antenna (adhesive, SMA male, 3 m cable)
- 16-pin terminal block
- 1x hex key
- Ethernet cable (1.5 m)
- QSG (Quick start guide)
- Packaging box

| | | |
|---|---|---|
| GATEWAY TRB245 | 9 W PSU | 1X MOBILE ANTENNA (SWIVEL, SMA MALE) |
| 1X GNSS ANTENNA (ADHESIVE, SMA MALE, 3 M CABLE) | 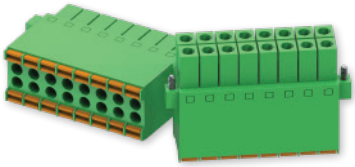 16-PIN TERMINAL BLOCK | 1X HEX KEY |
| ETHERNET CABLE (1.5 M) | QSG | |

* Standard package contents may differ based on standard order codes.

Copyright © 2024, UAB TELTONIKA NETWORKS. Specifications and information given in this document are subject to change by UAB TELTONIKA NETWORKS without prior notice.

# CLASSIFICATION CODES

HS Code: 851762
HTS: 8517.62.00

For more information on all available packaging options – please contact us directly.

# AVAILABLE VERSIONS

| HARDWARE VERSION | SUPPORTED FREQUENCIES | STANDARD ORDER CODE / PACKAGE CONTAINS |
|---|---|---|
| TRB245 **0*****<br>Europe[1], The Middle East, Africa, Thailand | **4G (LTE-FDD):** B1, B3, B7, B8, B20, B28A<br>**4G (LTE-TDD):** B38, B40, B41<br>**3G:** B1, B8<br>**2G:** B3, B8 | TRB245000000 / Standard package with EU PSU without connector<br>TRB245000300 / Standard package with AU PSU without connector<br>TRB245000200 / Standard package with UK PSU without connector<br>TRB245000600 / Standard package with Power cable with 4-way screw terminal<br>TRB245000700 / Mass packing code |
| TRB245 **1*****<br>North America | **4G (LTE-FDD):** B2, B4, B5, B12, B13, B14, B66, B71<br>**3G:** B2, B4, B5 | TRB245100100 / Standard package with US PSU without connector<br>TRB245100700/ Mass packing code |
| TRB245 **2*****<br>South America, Australia, New Zealan | **4G (LTE-FDD):** B1, B2[2], B3, B4, B5, B7, B8, B28<br>**4G (LTE-TDD):** B40<br>**3G:** B1, B2, B5, B8<br>**2G:** B2, B3, B5, B8 | TRB245200300 / Standard package with AU PSU without connector<br>TRB245200100 / Standard package with US PSU without connector<br>TRB245200000 / Standard package with EU PSU without connector<br>TRB245200600 / Standard package with Power cable with 4-way screw terminal<br>TRB245200700 / Mass packing code |
| TRB245 **4*****<br>Japan | **4G (LTE-FDD):** B1, B3, B8, B18, B19, B26<br>**4G (LTE-TDD):** B41<br>**3G:** B1, B6, B8, B19 | TRB245400800 / Standard package with JP PSU without connector<br>TRB245400700 / Mass packing code |

The price and lead-times for region (operator) specific versions may vary. For more information please contact us.
1 - Regional availability - excluding Russia & Belarus.
2 - LTE-FDD B2 does not support Rx-diversity.

Copyright © 2024, UAB TELTONIKA NETWORKS. Specifications and information given in this document are subject to change by UAB TELTONIKA NETWORKS without prior notice.

# TRB245 SPATIAL MEASUREMENTS

## MAIN MEASUREMENTS

W x H x D dimensions for TRB245:

| | |
|---|---|
| Device housing*: | 83 x 25 x 74.2 mm |
| Box: | 173 x 71 x 148 mm |

*Housing measurements are presented without antenna connectors and screws; for measurements of other device elements look to the sections below.

## TOP VIEW

The figure below depicts the measurements of TRB245 and its components as seen from the top:

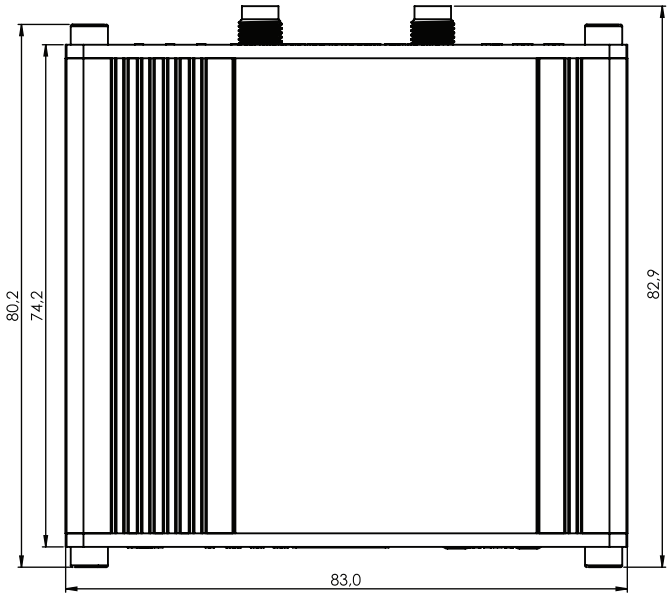


## RIGHT VIEW

The figure below depicts the measurements of TRB245 and its components as seen from the right side:

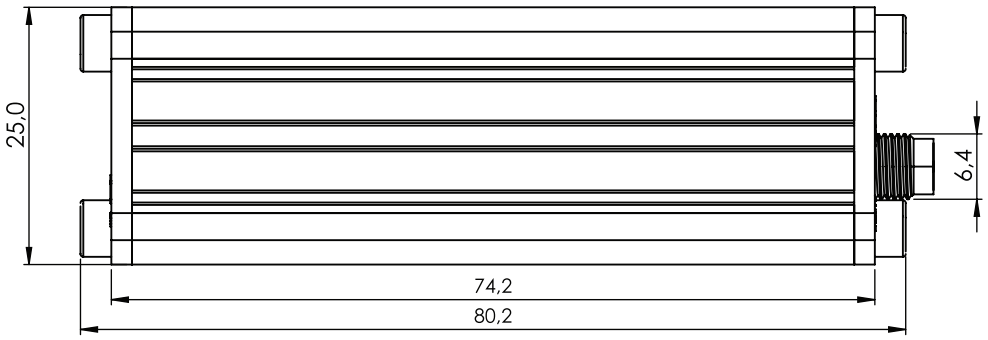


Copyright © 2024, UAB TELTONIKA NETWORKS. Specifications and information given in this document are subject to change by UAB TELTONIKA NETWORKS without prior notice.

## FRONT VIEW

The figure below depicts the measurements of TRB245 and its components as seen from the front panel side:

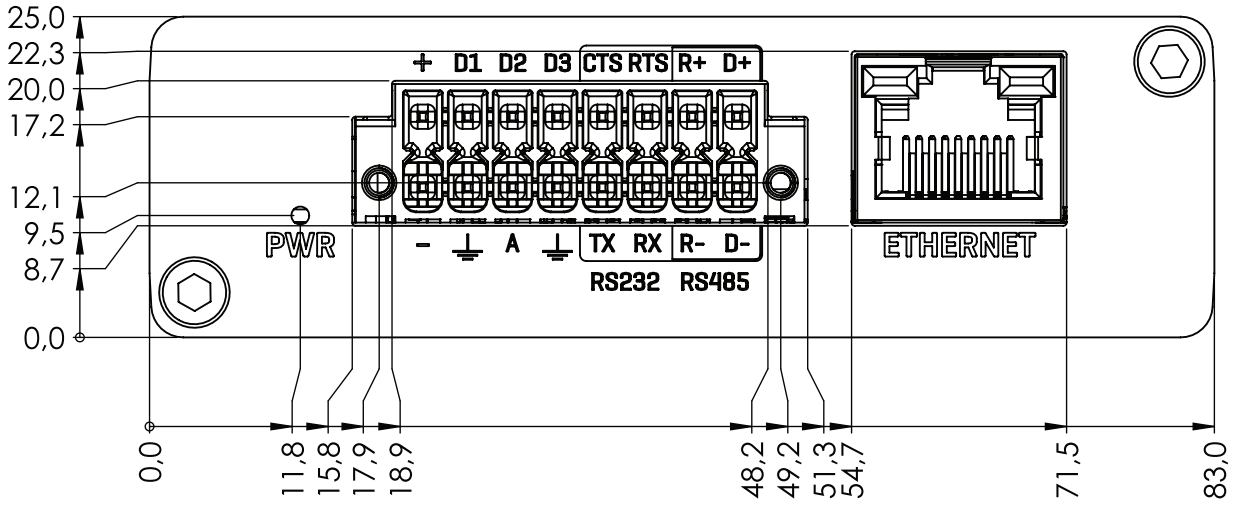


## REAR VIEW

The figure below depicts the measurements of TRB245 and its components as seen from the back panel side:

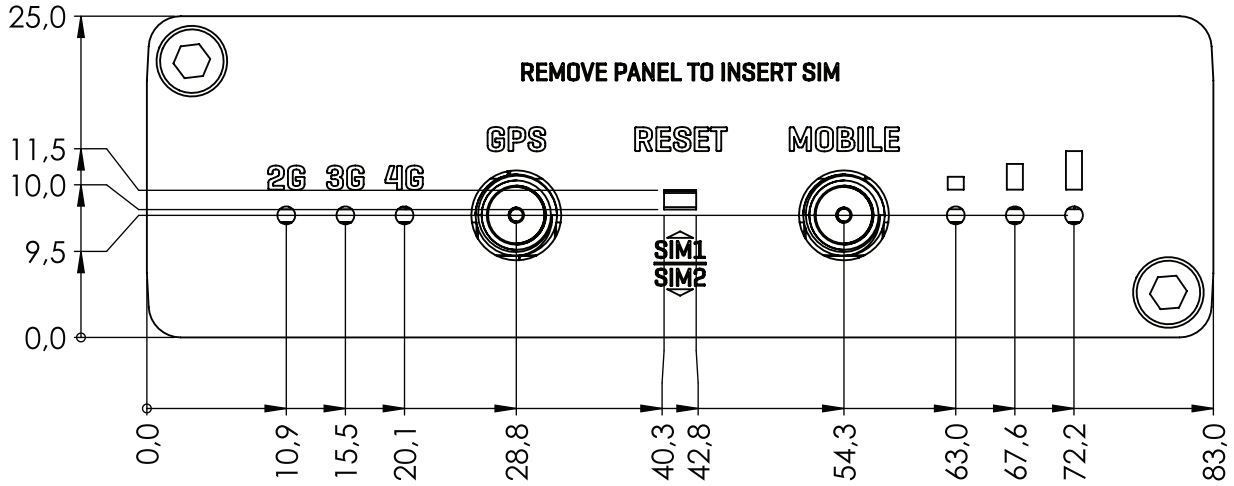


Copyright © 2024, UAB TELTONIKA NETWORKS. Specifications and information given in this document are subject to change by UAB TELTONIKA NETWORKS without prior notice.

## MOUNTING SPACE REQUIREMENTS

The figure below depicts an approximation of the device's dimensions when cables and antennas are attached:

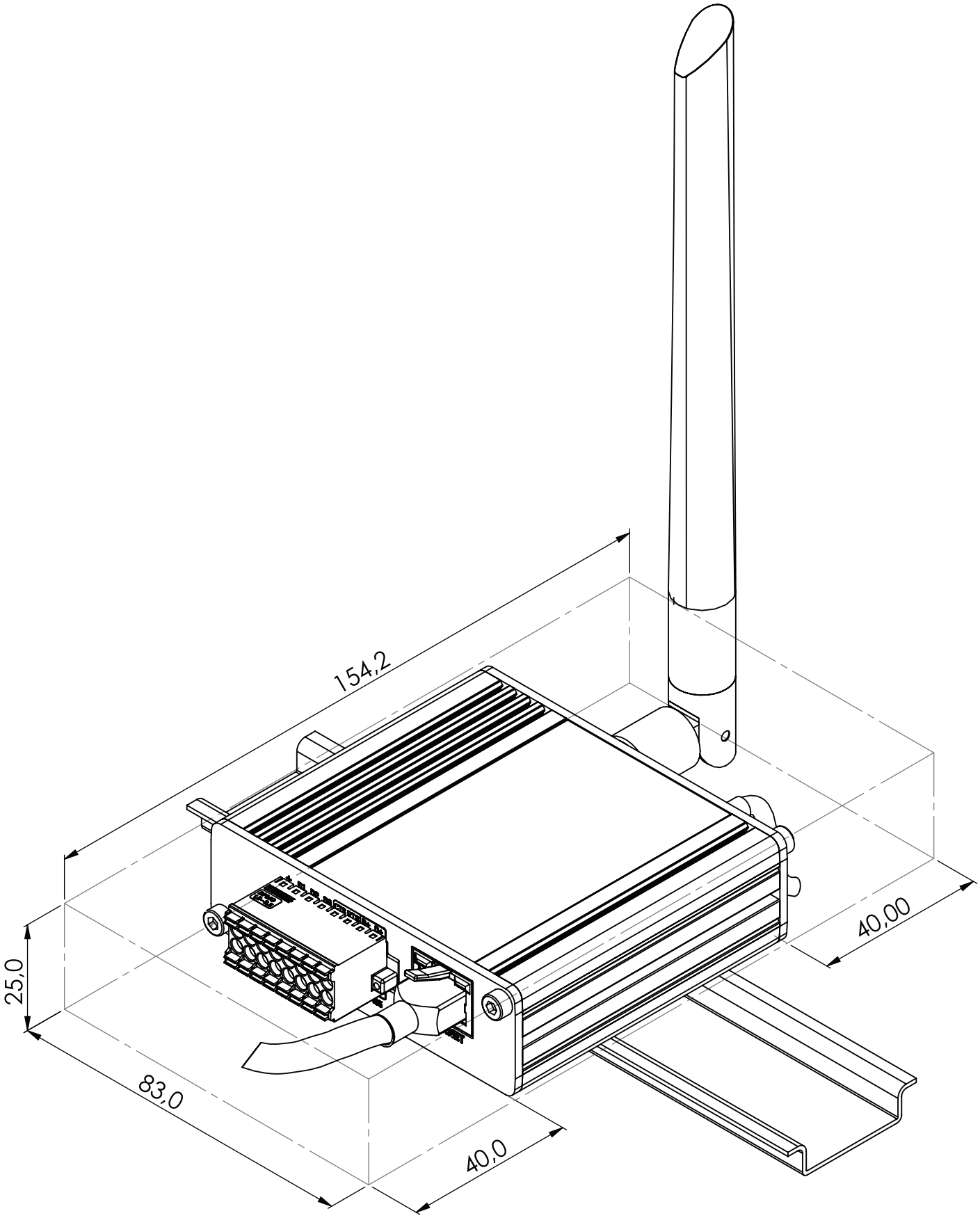


Copyright © 2024, UAB TELTONIKA NETWORKS. Specifications and information given in this document are subject to change by UAB TELTONIKA NETWORKS without prior notice.

## DIN RAIL

The scheme below depicts protrusion measurements of an attached DIN Rail:

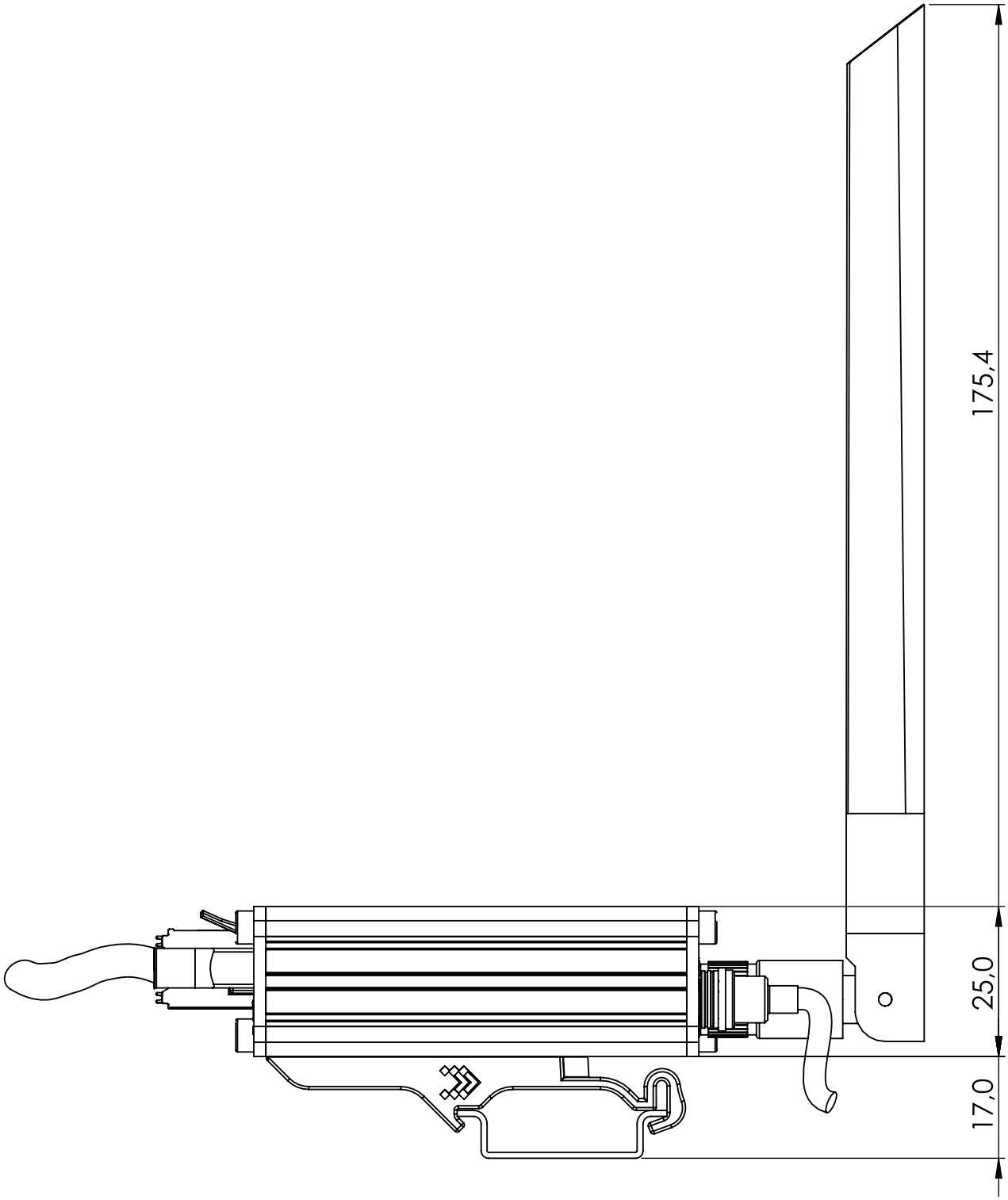


Copyright © 2024, UAB TELTONIKA NETWORKS. Specifications and information given in this document are subject to change by UAB TELTONIKA NETWORKS without prior notice.