LF-GSD065YI

AC100-277V DALI Dimmable NFC Constant Current LED Driver

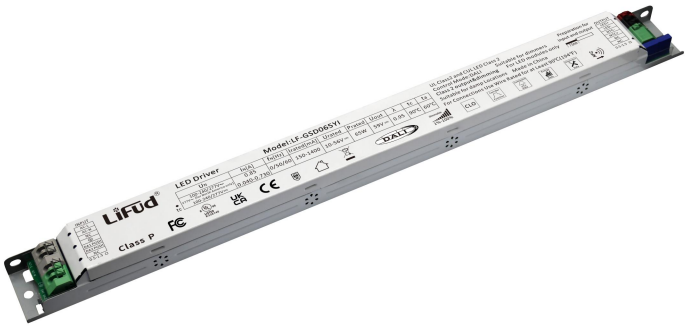

Product family features

— DALI&PUSH dimmable

— Dimming range: 1-100%

— Standby power consumption≤0.3W

— Suitable for Class I light fixtures

— 5 years guarantee

Product family benefits

— Advanced functions: EL, CorridorDIM, CLO

— DALI-2 part ext. 251, 252 and 253

— Output current adjustable and parameter set via NFC

— Comply with Class P, FCC, CE, UL, UKCA

— Comply with Zhaga Book 13, 24

— Surge level: PUSH: 1kV，L-N: 1kV, L/N-PG: 2kV

Typical applications

— For linear light and tri-proof light

— For office, decorative, commercial and residential lighting

Product parameters

— Output current 150-1400mA

— Output power 8.4-65W

— Input voltage 90-305Vac

— Output voltage 10-56Vdc

— Efficiency 91%

sales@prom-elec.com / ООО ПРОМЭЛЕКТРОНИКА

Electrical data

Input data

Rated supply voltage	100...277V		
AC voltage range	90...305V		
Mains frequency	0/50/60Hz		
DC voltage range	100...277V		
Power factor	≥0.95		
Efficiency (in max. Power)[1)]	≥91%		
THD	≤10%		
DC input current	0.04...0.73A		
Input current	0.65A Max/120V	0.35A Max/230V	0.3A Max/277V
Inrush current[2)]	96A	100A	150A
Loading no. on circuit breaker 10 A (B)	8	7	5
Loading no. on circuit breaker 10 A (C)	13	12	8
Loading no. on circuit breaker 16 A (B)	11	12	8
Loading no. on circuit breaker 16 A (C)	17	20	13
Protective conductor current	≤0.7mA		
Power input on stand-by	≤0.3W (when DALI OFF)		

Output data

Nominal output voltage	10...56V
Nominal output current	150...1400mA
Default output current	150mA
Current set	NFC/programmer
Maximum output power	65W
Nominal output power	8.4 ... 65W
Output ripple current (100 Hz)	±3.3 %
Flicker	Comply with IEEE Std 1789-2015
CIE SVM	≤0.4
IEC-Pst	≤1
Output current tolerance[3)]	±5%
Temperature tolerance	±10%
Starting time	≤1.5S

Safety

Withstanding voltage	I/P-O/P: 3.75kV&5mA&60S; I/P-DA1/DA2, DA1/DA2-PG, I/P-PG 1.5kV&5mA&60S
Surge capability (L-N)	1 kV
Surge capability (L/N-PE)	2 kV
PUSH [3)]	1 kV
Insulation resistance	I/P-PG, I/P-DA1/DA2, DA1/DA2-PG: >100MΩ@500VDC
Guarantee	5 years [5)]

1) 91% is the typical value tested in the largest load of 56V.

2) t =102μs (120Vac), 130μs(230Vac), 108μs(277Vac)

3) Output current tolerance is ±10% when the output current is ≤400mA

4) The surge test wiring at the PUSH terminal is connected in parallel with L-N

5) 5 years @Tc≤75℃

Characteristic diagram

Operating Window

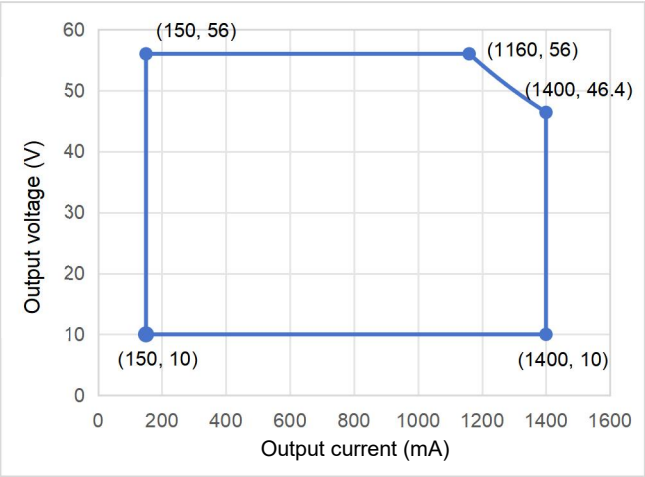

Typical Efficiency vs Load

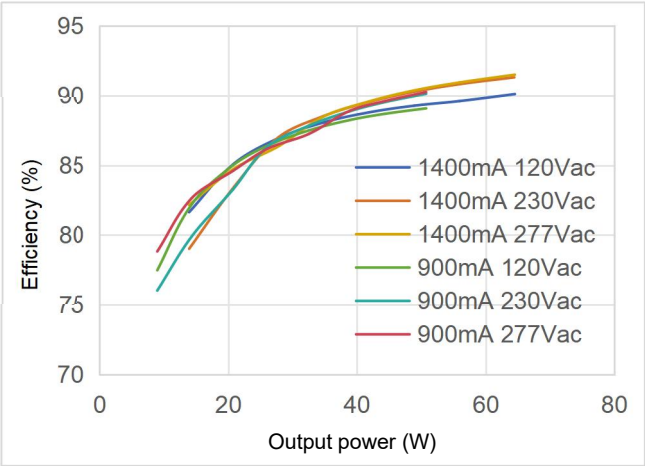

Typical Power Factor vs Load

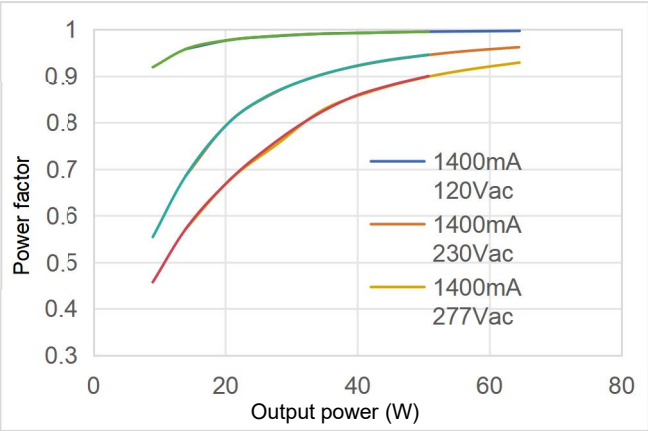

Typical THD vs Load

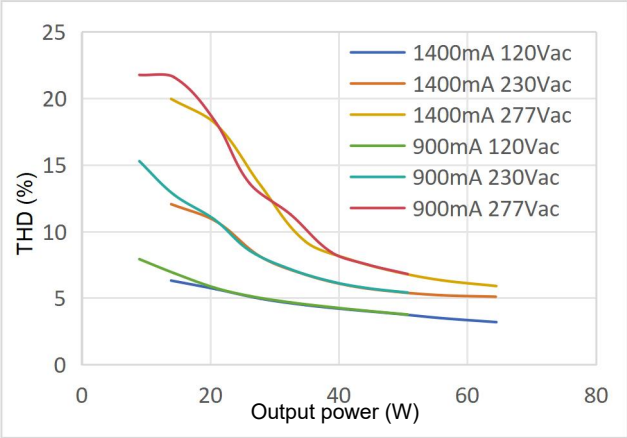

Lifespan

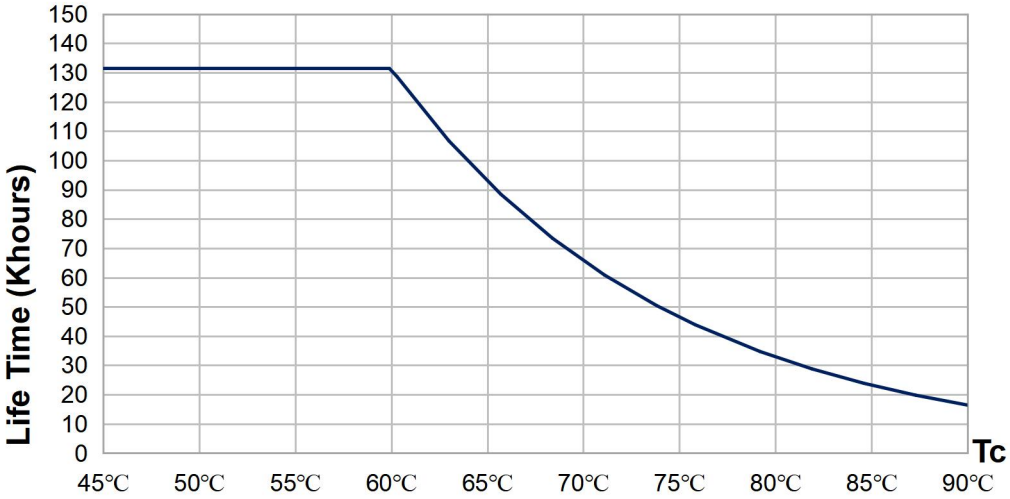

Dimensions

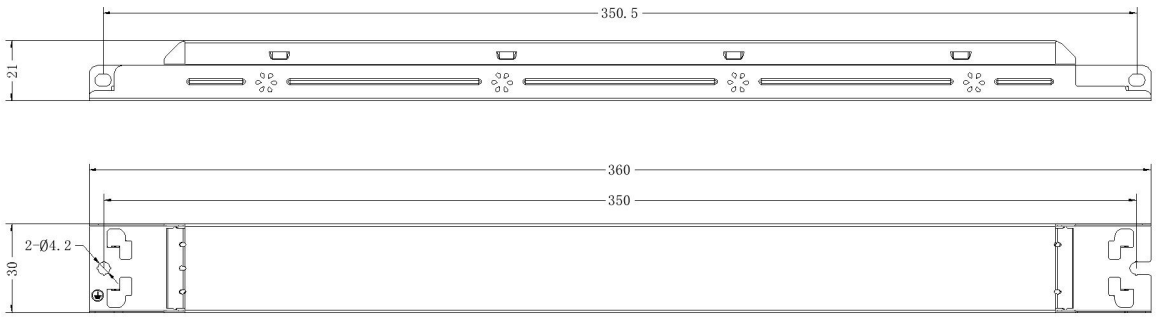

Mounting hole spacing, length	350mm
Product weight	330g
Cable cross-section, input side	0.5 ... 1.5 mm²
Cable cross-section, output side	0.5 ... 1.5 mm²
Wire preparation length, input side	7 ... 8mm
Wire preparation length, output side	7 ... 8mm
Length	360mm
Width	30.0mm
Height	21.0mm

Colors & materials

Casing material	Color coated sheet
Casing color	White

Temperature & operating conditions

Ambient temperature range	-30℃ - +60℃
Maximum temperature at tc test point	90℃
Temperature range at storage	-20℃ - +80℃ (6 months in Class I environment)
Humidity range at storage	10-90%RH (no condensation)
Humidity during operation	20-90%RH (no condensation)
Atmospheric Pressure	86-106KPa
RoHS	RoHS 2.0 (EU) 2015/863

Tc test point

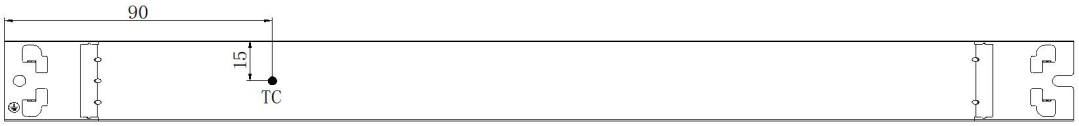

Tc point is at the top of LED driver

Product Terminal

Input		Output	
AC-L (Gray)	AC live wire input	**LED+ (Red)**	Positive electrode output of LED driver
AC-N (Gray)	AC neutral wire input	**LED- (Black)**	Negative electrode output of LED driver
NC	/	**NTC- (Black)**	Negative electrode input of NTC
⏚ **(Gray)**	Earth wire	**NTC+ (Green)**	Positive electrode output of NTC
DA1/PUSH (Green)	DALI1/PUSH dimming input	**NC**	/
DA2/PUSH (Green)	DALI2/PUSH dimming input	**NC**	/
NC	/		

Wiring Diagram of Output Terminal

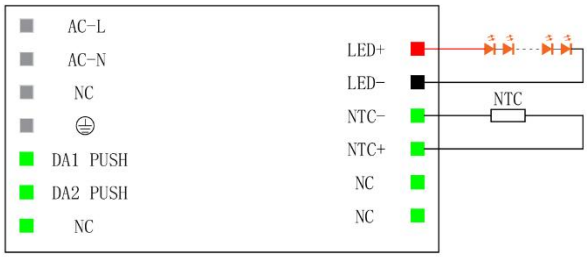

Capabilities

Dimmable	DALI/PUSH dimmable
Dimming range	1 ... 100%
Overheating protection	Default: output derating which is configurable via NFC
Short-circuit protection	Hiccup mode (Automatic reversible)
No-load protection	≤59V
Suitable for fixtures with prot. class	I
Programming interface	DALI / NFC
Control interface	DALI
Number of channels	1 channel
CorridorDIM	Yes
EL	Yes
CLO	Yes
DALI Part 251 252 253	Yes

Temperature Protective Characteristics

Protective Type				Min.	Typ.	Max.	Introduction
External over-temperature protection	Mode 1	If the temperature is too high, decrease the current first and then turn off the light.	R1 (Start to decrease the current)	/	1.65KΩ	/	When the external NTC resistance decreases to R1, the external thermal protection is triggered and the output current gradually decreases.
			R2 (Stop decreasing the current)	/	1.27KΩ	/	When the external NTC resistance decreases to R2, the output current drops to the programmed protection current value and stops decreasing (default 50%Io).
			R3 (Turn off the light)	/	1.11KΩ	/	When the external NTC resistance decreases to R3, turn off the light and it needs to restart the AC to restore.
	Mode 2	If the temperature is too high, turn off the light.	R3 (Turn off the light)	/	1.11KΩ	/	When the external NTC resistance decreases to R3, turn off the light and it needs to restart the AC to restore.

Remark: The recommended NTC model is NTSE0103FHM57A with a resistance of 10kΩ

Dimming Function Instruction

- **DALI dimming function**

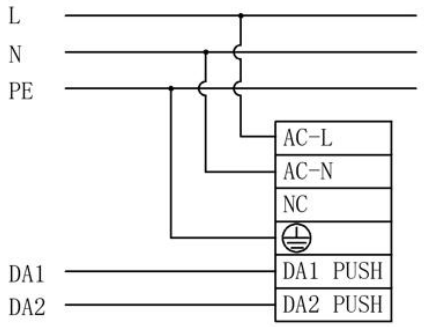

Wiring diagram of DALI dimming

① Default setting brightness is 100%.

② Connect DALI signal to DA1 PUSH and DA2 PUSH.

③ DALI protocol includes Max.16 scene groups.

④ Maximum number of LED drivers connected in parallel in DALI dimming mode: 64 pcs.

⑤ Minimum dimming depth of DALI dimming: 1% (@The maximum output current; the dimming depth of different masters will vary).

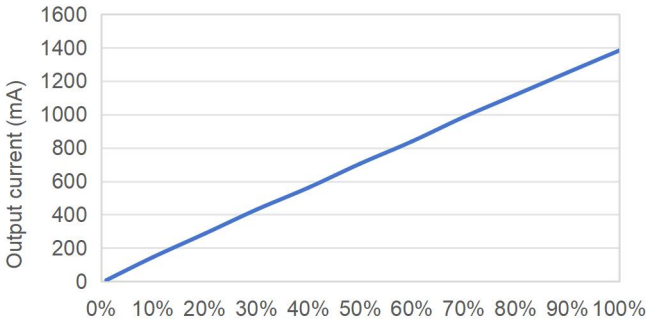

Linear dimming

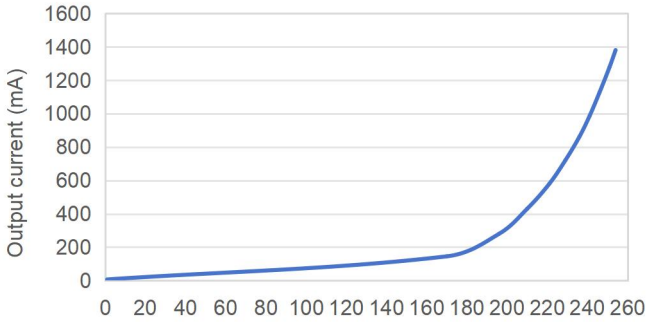

Logarithmic dimming

Note: Choose only ONE as opposed to use DALI or PUSH at the same time in case of the damage of DALI dimmer.

• PUSH dimming function

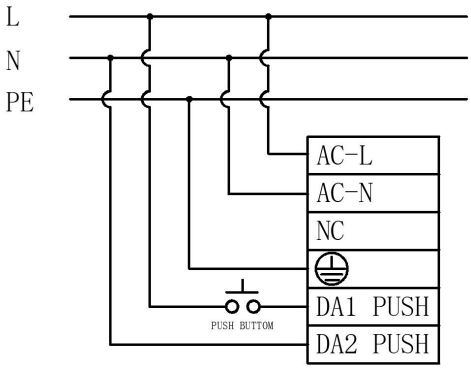

Wiring diagram of PUSH dimming

Switch from DALI mode to PUSH mode: short press PUSH switch to enable PUSH dimming function

① Connect PUSH switch between AC-L and DA1 PUSH in series and connect DA2 PUSH to AC-N.

② Make sure that AC-L and AC-N are NOT directly connected to DA1 PUSH and DA2 PUSH terminals.

③ Make sure that PUSH switch is off before the AC is powered on; operate PUSH after the AC is powered on.

④ Make sure the PUSH switch is off before disconnecting the AC.

⑤ If you have any questions about the wiring and operation, please confirm with Lifud FAE.

⑥ Wrong wiring or operation may cause damage to the driver.

Operation	Duration	Function
Instant Push	0.1-0.5S	LED light on/off
Long Push	0.6-9S	LED light dim up/down
Reset Push	＞9S	Reset the brightness of luminaire to 50%

① The PUSH operation won't cause any variations on LED driver if it's less than 0.1S.

② Minimum dimming depth of PUSH dimming: 1%

③ The PUSH dimming mode has the memory function in case of any power failure. When the LED driver is powered on again, the light will return to the previous state before power failure.

④ The present dimming direction of PUSH dimming is opposite to the former one.

⑤ In automatic mode, long press for more than 3 minutes to enter the corridor dimming function.

⚠ ⑥Maximum voltage of PUSH dimming can be up to 264Vac. PUSH dimming is not supported when the input voltage is 277Vac.

- **Corridor dimming function**

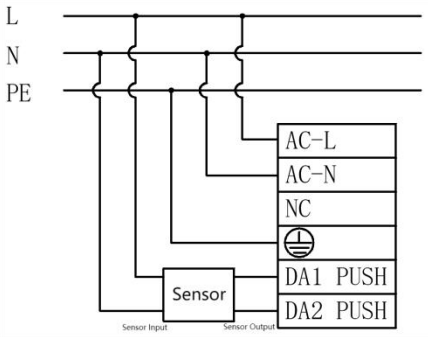

Wiring diagram of corridor dimming

Operations for Entering Corridor Lighting Mode

Approach 1: use Lifud programmer to enable the driver's corridor lighting mode and set parameters.

Approach 2: keep pressing PUSH for 3+ mins so as to switch to the corridor lighting mode.

Approach 3: keep moving in the effective sensing area for 3+ mins (set the sensor's hold time for 3+ mins to enable the corridor lighting mode.

Remarks:

1. In the automatic detection mode, the driver can be switched from PUSH mode to corridor lighting mode by approach 2 and 3, its brightness will dim up to 50%; long press for 3 mins and then it dims down and then dims up, which means the driver has entered the corridor lighting mode.

2. After activating the corridor dimming mode, PUSH DIM is turned off.

3. In the case of AC input and any level of brightness in the corridor lighting mode, switching DC and then returning AC will restart the corridor lighting mode.

Operations for Exiting Corridor Lighting Mode

Approach 1: use Lifud programmer to choose other modes and exit corridor lighting mode.

Approach 2: connect to DALI master and send DALI command, the driver will return to the DALI dimming mode.

Approach 3: connect to the PUSH switch and continuously press it 10 times within 10 secs, the driver will return to the PUSH dimming mode.

Remark:

1. The 3-sec or above single press or release will cause the press number to be counted as 0.

2. The approach 2 and 3 CANNOT be used if the corridor lighting mode of driver is set via Lifud programmer.

Working Process of Corridor Dimming Mode

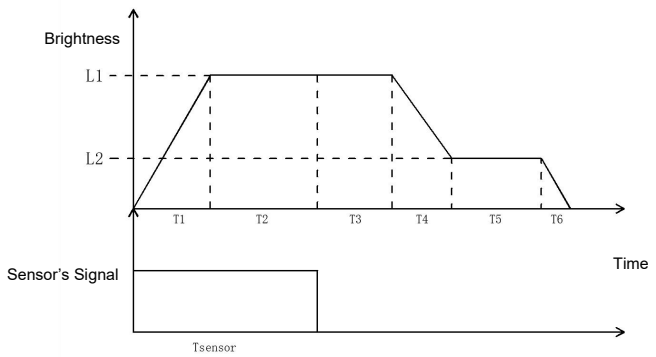

Symbol	Name	Default value	Available scope setting
T1	Fade-in time of sensing	1s	0-100s
T2	Holding time of sensing	Depends on sensor	Depends on sensor
T3	Waiting time of sensing	180s	0-59999s, 60000s (infinite)
T4	Fade-out time of sensing	5s	0-100s
T5	Unattended time	60000s (infinite)	0-59999s, 60000s (infinite)
T6	Fade-out off time	0s	0-100s
L1	Sensing brightness	100%	0-100%
L2	Unattended brightness	10%	0-100%

Emergency function instruction

The default output current is 15% Io max in the case of DC emergency input.

Emergency input voltage: 100-277Vdc

Note:

1. Emergency function can be set by Lifud programmer and programming software(or FEIG NFC reader)

2. It can be set from 0 to 100%.

3. If the emergency mode is off, input current is DC and the working mode is the same as the AC input.

4. In the case of mains input, the brightness is random when using PUSH dimming. When the driver enters the emergency escape lighting system and then reconnects AC, the light brightness will remain the one set via PUSH switch when mains is connected.

5. In the case of mains input, the brightness is random when using DALI dimming. When the driver enters the emergency escape lighting system and then reconnects AC, the light brightness will return to the brightness when DALI is powered on.

Programmer tools and software

Product	Name	Brand	Model	Software
	NFC programmer	FEIG	ID CPR30+	LF-NFCReader
	NFC handy programmer	FEIG	ID ISC.PRH101-USB	LF-NFCReader
	NFC group control programmer	FEIG	ID ISC.LRM1002-E ID ISC.ANT300/300-A	LF-NFCToMP
	Lifud programmer	LIFUD	LF-SCS080C	LF-PRG
	NFC App	LIFUD	-	Lifud NFC

Read/write and parameter configuration

Programming project	Default settings	Parameters settings	Read/Write
Production information	-	No	Read
Output current	150mA (default)	Yes	Read/Write
Operating mode	Automatic detection (DALI/PUSH)	Yes	Read/Write
EL	15% (default)	Yes	Read/Write
CorridorDIM	Inactivated	Yes	Read/Write
CLO	Inactivated	Yes	Read/Write
DALI Part 251	Activated	Yes	Read/Write
DALI Part 252	Activated	Can only be reset	Read/Write
DALI Part 253	Activated	Can only be reset	Read/Write

NFC function instructions

①NFC

PC Software NFC Reader LED Driver

Note: When using the NFC reader, the driver is not allowed to operate while powered on. The driver must be powered off and completely discharged before it can read and write normally.

②**Programmer setting box**

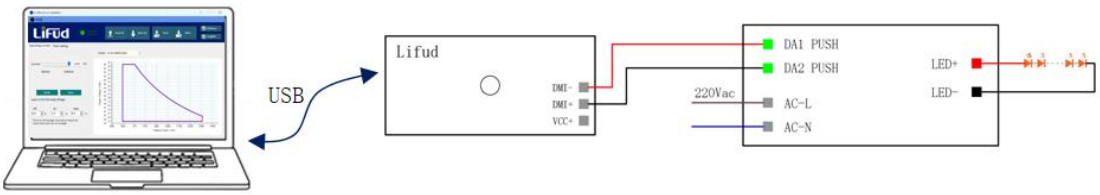

PC Software Lifud Programmer LED Driver

Note: When using the programmer, the driver must be powered on with AC for normal reading and writing.

③**NFC APP**

QR Code for NFC APP Download

Note: When using the NFC APP for parameter setting, the driver is not allowed to operate while powered on. The driver must be powered off and completely discharged before it can read and write normally.

Certificates & standards

Approval marks – approval	UL, FCC, Class P, CE, UKCA, DALI-2
Standards	UL 8750; CSA C22.2 no.250.13; FCC Part 15B; EN 61347-2-13; EN 61347-2-1; EN 62493; EN 55015; EN 61547; EN 61000-3-2; EN 61000-3-3; IEC 61347-1; IEC 61347-2-13; DALI-2 certified (Part 101, 102, 207, 251, 252, 253)
Type of protection	IP20

Logistical Data

Product	Packaging unit (Pieces/Unit)	Dimensions (L*W*H)	Volume	Gross weight
LF-GSD065YI	40	385 mm * 285 mm * 210 mm	23.04 dm³	14.2kg±5%

Test equipment & condition

Test Equipment	AC power source: CHROMA6530, digital power meter: CHROMA66202, oscilloscope: Tektronix DPO3014, DC electronic load: M9712B, LED board, constant temperature and humidity chamber, lightning surge generator: Everfine EMS61000-5B, rapid group pulse generator: Everfine EMS61000-4A, spectroanalyzer: KH3935, hi-pot tester: EEC SE7440, flicker tester (flicker-free coefficient test): Everfine LFA-3000, etc.
Compatibility of DALI Dimming	Yuanhao Master, Simon Master, Philips Master DDBC120-DALI, OSRAM Master, Helvar Master 905 Router, Tridonic Master and HDL MC64-DALI431 Master

If there are no special remarks, the above parameters are tested at the ambient temperature of 25℃, humidity of 50%, maximum output load and input voltage of 230Vac/50Hz.

Additional information

1. It is recommended that user install the over voltage protection, under voltage protection and surge protection devices in the power supply circuits of light fixtures to ensure electricity safety.

2. The LED driver used in combination with the end device is one of the accessories of the whole light fixture, and the EMC of the whole light fixture is not only susceptible to the driver itself, but to the LED light fixture and the whole light fixture's wiring. Thus, the manufacturer of LED light fixture should re-confirm the EMC of the whole light fixture before the whole light fixture is finished.

3. Configure the quantity of circuit breakers based on inrush current and time.

4. The PC cover, casing and end cap for assembling the LED driver in the light fixture must meet the fire rating of UL94-V0 or above.

5. DC input is only for emergency.

6. In no-load condition, it is recommended that user not directly connect the LED driver to the light fixture in case that the light fixture is damaged.

7. When the load voltage is 10-46.4Vdc, the maximum current is 1400mA constant current output; when the load voltage is over 46.4Vdc, the constant power output is 65W±2W.

8. The default current of LED driver is 150mA and it can be set by FEIG NFC reader or Lifud NFC App.

9. When using other DALI masters, please test their compatibilities with Lifud LED driver in advance.

10. If the parasitic capacitance between LEDs and the PCBA is too large, and the light fixture is grounding, there will be a slight flicker or afterglow at the moment of powering on, in standby mode, or when dimming to the lowest setting.

11. Lifud Technology Co., Ltd. reserves the right to interpret any contents of this specification.

Transportation & storage

Suitable transportation means: vehicles, boats and aeroplanes.

In transit, it is necessary to prepare awnings for rain or sun protection. Moreover, please keep civilized loading and unloading to prevent the vibration or impact of LED driver as much as possible.

The storage of LED driver shall conform to the standard of Class I environment. When using LED drivers which have been stored for more than 6 months, please re-test them firstly. Do not use them unless they are tested to be qualified.

Cautions

Please use Lifud LED driver according to its parameters in the specification, otherwise the LED driver may malfunction.

Using any incompatible light fixtures or those that have not been certified may cause fire, explosion or other risks.

Man-made damage is beyond the scope of Lifud warranty service.

Disclaimer

Subject to change without notice. Errors and omission excepted. Always make sure to use the most recent release.