brainboxes
www.brainboxes.com

UK +44 (0)151 220 2500 // USA +1 855 958 2502
www.brainboxes.com // sales@brainboxes.com

SW-725 Hardened Industrial 5 Port PoE+ Ethernet Switch

5 Port (Ports 1-4 PoE+) Unmanaged 10/100 Ethernet Switch DIN Mountable

- 5 port PoE+ 10/100 Fast Ethernet device
- Ports 1-4 PoE+ capable
- Fully compliant to IEEE 802.3af/at
- PoE Power Budget: 90W @ 70ºC
- Industrial temp range: -40ºC to +70ºC
- Redundant dual power inputs: +44V to +57V DC
- Compact design with integral DIN mount
- Allows power and data to be combined on the same Ethernet cable

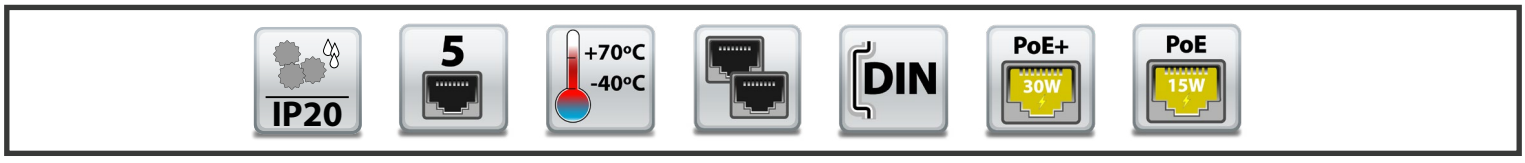

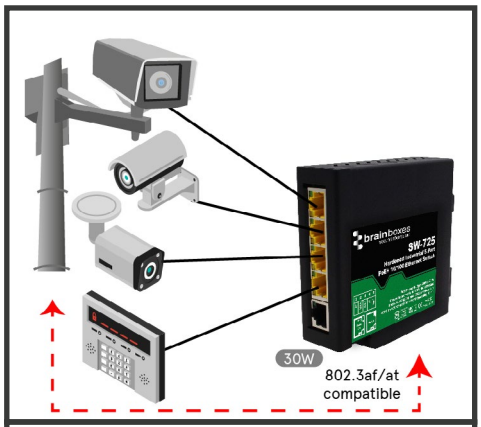

Send power and data to remote CCTV cameras, PoE telephones, PoE Wifi access points, NVRs, and more

Tough metal casing with removable numbered power terminal for easy wiring

Integral DIN mount and slim design takes up minimal cabinet space

Complies with UL60950-1
E112324 CSA C22.2 No. 60950-1

brainboxes

UK +44 (0)151 220 2500 // USA +1 855 958 2502
www.brainboxes.com // sales@brainboxes.com

SW-725

Hardened Industrial 5 Port PoE+ Ethernet Switch

90W PoE Power Budget shared between 4 Ethernet Ports

-40ºC to +70ºC/-40ºF to +158ºF temperature range

Ports 1-4 IEEE 802.3af/at compliant: deliver up to 30W to each port (backwards compatible) with IEEE

Tough metal case

Integral DIN mount with ground

Automatic detection of data transmission speed: 10 or 100 MBps

Power consumption is optimised based on the status of the link device

2k Byte maximum packet size – improves the efficiency of bulk data transfer and system performance

Easy Wire Removable screw terminal block

Dual redundant power input: +44VDC to +57VDC

Connectors		
Screw Terminals	3.5mm pitch, #22 - #14, 0.5mm²-2.5mm² pin power supply	
Wire Thickness	0.150 inch, 3.81mm, 20 pins, 12+8 screw terminals, #26 - #16 AWG, 0.14mm²-1.3mm²	
Power Supply		
Power Consumption	4 Watts Max : 91mAmps@+44VDC/70mAmps@+57VDC	
PoE Power Budget	90W @ 70ºC	
Power Supply input	Unregulated +44V to +57Volts DC, reverse polarity protection	
Isolation	1500VRMS Magnetic isolation from Ethernet	
Environmental		
Operating Temperature	-40ºC to +70ºC/-40ºF to +158ºF	
Storage Temperature	-40ºC to +70ºC/-40ºF to +158ºF	
Ambient Relative Humidity	5 to 95% (non-condensing)	
Magjack LED Information		
Link/Activity LED	Solid green	Connection established
	Flashing Green	Data communication
PoE Power LED (Ports 1-4)	Solid Yellow	PoE Power ON
	Flashing Yellow	Power Warning
Ethernet		
Ethernet Port	5 x RJ45 jack, 10/100Mhz autosensing, crossover auto sensing (Auto MDIX)	
Protection	1,500 Volts magnetic isolation between ports	
Housing	IP-20 rated non-conducting polyamide case	

brainboxes

UK +44 (0)151 220 2500 // USA +1 855 958 2502
www.brainboxes.com // sales@brainboxes.com

SW-725

Hardened Industrial 5 Port PoE+ Ethernet Switch

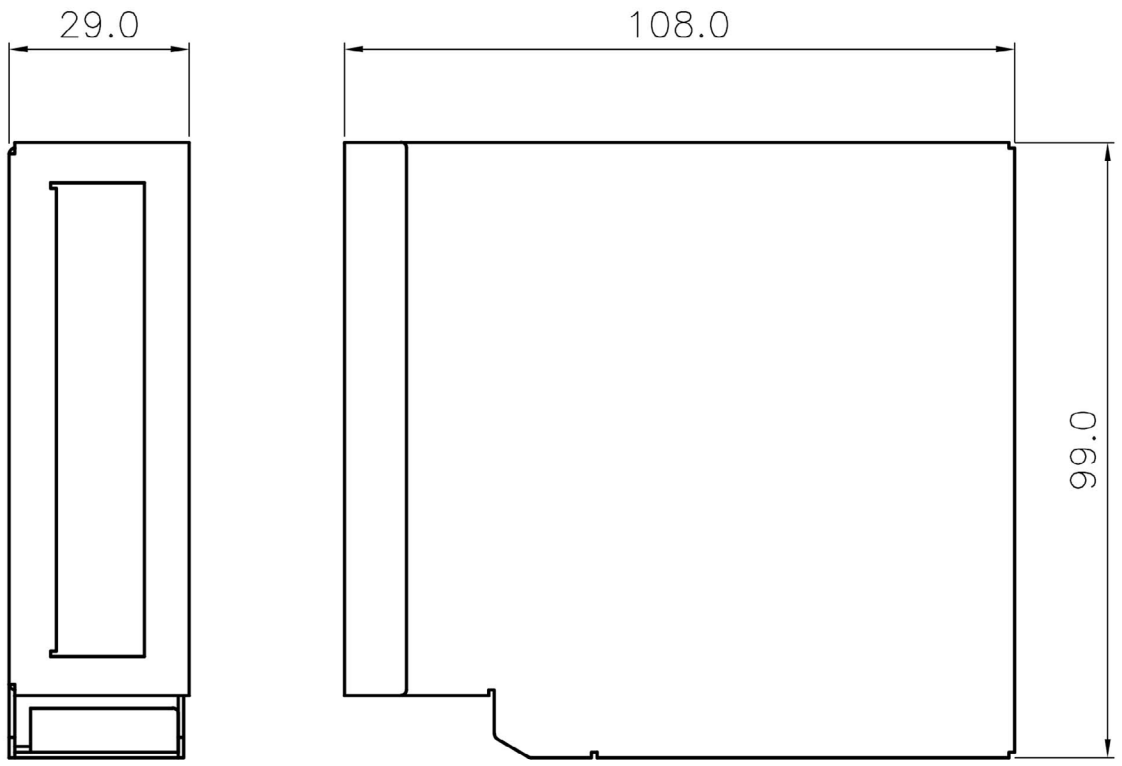

Ethernet Ports x4 Pin Outs

PoE Pinout 1/2(V+) 3/6(V-) Endspan Mode A

PIN	FUNCTION	
1	Tx+	DC+
2	Tx-	DC+
3	Rx+	DC-
4	unused	
5	unused	
6	Rx-	DC-
7	unused	
8	unused	

5 position 3.5mm pitch socket compatible with Euroblock pluggable terminal block connectors

Power Terminal Pin Outs

PIN	FUNCTION
1	-V
2	+VA
3	+VB
4	-V

5 position 3.5mm pitch pluggable terminal block included

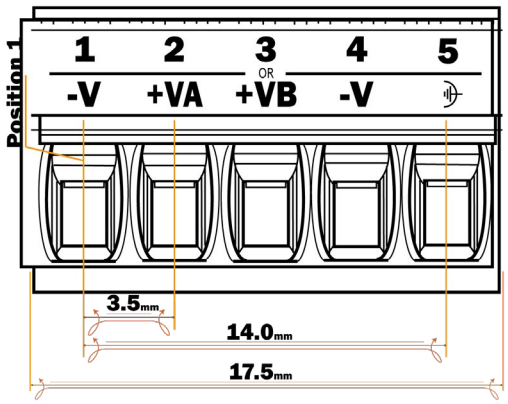

Lifetime Warranty and Support:

We can help with every aspect of your project, from getting you up and running to custom application.

SW-725 Hardened Industrial 5 Port PoE+ Ethernet Switch

Product Information	
Product Weight	0.33kg, 11.64 ounces
Product Dimensions	120x100x30 mm, 4.7x3.9x1.19 inches
Packaging Information	
Packaging	Quick Start Guide, Device
Packaged Weight	0.44 kg, 15.5 ounces
Packaged Dims	160x135x49 mm, 6.3x5.3x1.9 inches
GTIN Universal Code	837324004564
Industry Approvals	Microsoft Certified Gold Partner, WEEE, RoHS, AEO (C-TPAT), CE, UKCA, METL Complies with UL62368-1
HTS	8517620000
ECCN	5A991.b
CAGE	8QCY6
Warranty	Lifetime - online registration required
Support	Lifetime Web, Email & Phone Support from fully qualified, friendly staff who work in and alongside the Product Development Team
Standards	ISO9001, ISO14001
OEM option	Available for bulk buy OEM
COO (Country of Origin)	GB
Made In	Manufactured in GB by Brainboxes

PW-323
PoE Splitter

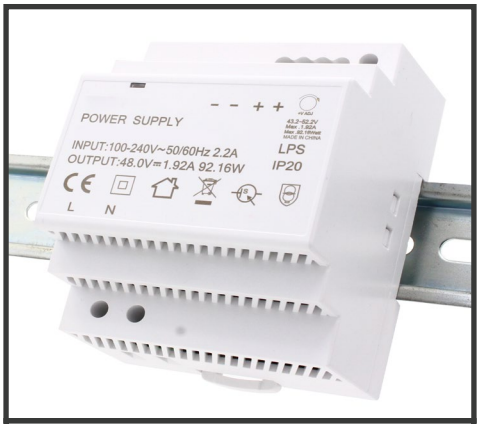

PW-301
DIN Rail Power Supply

SW Range
Switch products available in a range of formats and specifications.
www.brainboxes.com

© Brainboxes 2021