Open Mode Design (FO-CAP), X7R Dielectric, 16 – 200 VDC (Commercial & Automotive Grade)

Electronic Components KEMET CHARGED.

Overview

KEMET's Ceramic Open Mode capacitor in X7R dielectric is designed to significantly minimize the probability of a low IR or short circuit condition when forced to failure in a board stress flex situation, thus reducing the potential for catastrophic failure. The Open Mode capacitor may experience a drop in capacitance; however, a short is unlikely because a crack will not typically propagate across counter electrodes within the device's "active area." Since there will not be any current leakage associated with a typical Open Mode flex crack, there is no localized heating and therefore little chance for a catastrophic and potentially costly failure event.

Driven by the demand for a more robust and reliable component, the Open Mode capacitor was designed for critical applications where higher operating temperatures and mechanical stress are a concern. These capacitors are widely used in automotive circuits as well as power supplies (input and output filters) and general electronic applications.

Concerned with flex cracks resulting from excessive tensile and shear stresses produced during board flexure and thermal cycling? These devices are available with KEMET's Flexible termination technology which inhibits the transfer of board stress to the rigid ceramic body, therefore mitigating flex cracks which can result in low IR or short circuit failures. Although flexible termination technology does not eliminate the potential for mechanical damage that may propagate during extreme environmental and handling conditions, it does provide superior flex performance over standard termination systems. When combined with flexible termination technology these devices offer the ultimate level of protection against a low IR or short circuit condition. Open Mode devices compliment KEMET's Floating Electrode (FE-CAP) and Floating Electrode with Flexible Termination (FF-CAP) product lines by providing a fail-safe design optimized for mid to high range capacitance values. These devices exhibit a predictable change in capacitance with respect to time and voltage and boast a minimal change in capacitance with reference to ambient temperature. Capacitance change is limited to ±15% from −55°C to +125°C.

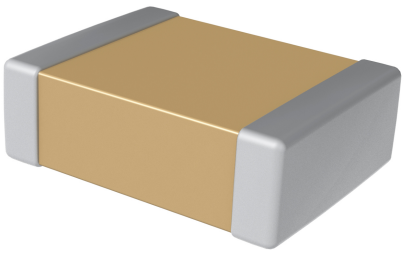

Click image above for interactive 3D content

Open PDF in Adobe Reader for full functionality

Ordering Information

C	1210	J	685	K	3	R	A	C	TU
Ceramic	Case Size (L" x W")	Specification/ Series	Capacitance Code (pF)	Capacitance Tolerance	Rated Voltage (VDC)	Dielectric	Failure Rate/ Design	Termination Finish[1]	Packaging/Grade (C-Spec)
	0805 1206 1210 1812	F = Open Mode J = Open Mode with Flexible Termination	Two significant digits + number of zeros	K = ±10% M = ±20%	4 = 16 3 = 25 5 = 50 1 = 100 2 = 200	R = X7R	A = N/A	C = 100% Matte Sn L = SnPb (5% Pb minimum)	See "Packaging C-Spec Ordering Options Table" below

[1] *Additional termination finish options may be available. Contact KEMET for details.*

[1] *SnPb termination finish option is not available on automotive grade product.*

© KEMET Electronics Corporation • P.O. Box 5928 • Greenville, SC 29606 • 864-963-6300 • www.kemet.com

sales@prom-elec.com / ООО ПРОМЭЛЕКТРОНИКА

Packaging C-Spec Ordering Options Table

Packaging Type	Packaging/Grade Ordering Code (C-Spec)
Commercial Grade[1]	
Bulk Bag	Not Required (Blank)
7" Reel/Unmarked	TU
13" Reel/Unmarked	7411 (EIA 0603 and smaller case sizes) 7210 (EIA 0805 and larger case sizes)
7" Reel/Marked	TM
13" Reel/Marked	7040 (EIA 0603 and smaller case sizes) 7215 (EIA 0805 and larger case sizes)
7" Reel/Unmarked/2 mm pitch[2]	7081
13" Reel/Unmarked/2 mm pitch[2]	7082
Automotive Grade[3]	
7" Reel	AUTO
13" Reel/Unmarked	AUTO7411 (EIA 0603 and smaller case sizes) AUTO7210 (EIA 0805 and larger case sizes)
7" Reel/Unmarked/2 mm pitch[2]	3190
13" Reel/Unmarked/2 mm pitch[2]	3191

[1] Default packaging is "Bulk Bag". An ordering code C-Spec is not required for "Bulk Bag" packaging.

[1] The terms "Marked" and "Unmarked" pertain to laser marking option of capacitors. All packaging options labeled as "Unmarked" will contain capacitors that have not been laser marked.

[2] The 2 mm pitch option allows for double the packaging quantity of capacitors on a given reel size. This option is limited to EIA 0603 (1608 metric) case size devices. For more information regarding 2 mm pitch option see "Tape & Reel Packaging Information".

[3] Reeling tape options (Paper or Plastic) are dependent on capacitor case size (L" x W") and thickness dimension. See "Chip Thickness/Tape & Reel Packaging Quantities" and "Tape & Reel Packaging Information".

[3] For additional Information regarding "AUTO" C-Spec options, see "Automotive C-Spec Information".

[3] All Automotive packaging C-Specs listed exclude the option to laser mark components. Please contact KEMET if you require a laser marked option. For more information see "Capacitor Marking".

Benefits

- −55°C to +125°C operating temperature range
- Open Mode/fail open design
- Mid to high capacitance flex mitigation
- Lead (Pb)-free, RoHS and REACH compliant
- EIA 0805, 1206, 1210, and 1812 case sizes
- DC voltage ratings of 16 V, 25 V, 50 V, 100 V, and 200 V
- Capacitance offerings ranging from 1,000 pF to 6.8 µF
- Available capacitance tolerances of ±5%, ±10%, and ±20%
- Non-polar device, minimizing installation concerns
- 100% pure matte tin-plated termination finish allowing for excellent solderability
- Commercial and Automotive (AEC–Q200) grades available
- SnPb termination finish option available upon request (5% Pb minimum)
- Flexible termination option available upon request

Applications

Typical applications include input side filtering (power plane/bus), high current (battery line) and circuits that cannot be fused to open when short circuits occur due to flex cracks. Markets include automotive applications that are directly connected to the battery and/or involve conversion to a 42 V system and raw power input side filtering in power conversion.

Automotive C-Spec Information

KEMET Automotive Grade products meet or exceed the requirements outlined by the Automotive Electronics Council. Details regarding test methods and conditions are referenced in document AEC–Q200, Stress Test Qualification for Passive Components. These products are supported by a Product Change Notification (PCN) and Production Part Approval Process warrant (PPAP).

Automotive products offered through our distribution channel have been assigned an inclusive ordering code C-Spec, "AUTO." This C-Spec was developed in order to better serve small and medium-sized companies that prefer an automotive grade component without the requirement to submit a customer Source Controlled Drawing (SCD) or specification for review by a KEMET engineering specialist. This C-Spec is therefore not intended for use by KEMET's OEM Automotive customers and are not granted the same "privileges" as other automotive C-Specs. Customer PCN approval and PPAP request levels are limited (see details below).

Product Change Notification (PCN)

The KEMET Product Change Notification system is used to communicate primarily the following types of changes:

- Product/process changes that affect product form, fit, function, and/or reliability
- Changes in manufacturing site
- Product obsolescence

KEMET Automotive C-Spec	Customer Notification due to:		Days prior to implementation
	Process/Product change	Obsolescence*	
KEMET assigned[1]	Yes (with approval and sign off)	Yes	180 days minimum
AUTO	Yes (without approval)	Yes	90 days minimum

[1] *KEMET assigned C-Specs require the submittal of a customer SCD or customer specification for review. For additional information contact KEMET.*

Production Part Approval Process (PPAP)

The purpose of the Production Part Approval Process is:

- To ensure that supplier can meet the manufacturability and quality requirements for the purchased parts.
- To provide the evidence that all customer engineering design record and specification requirements are properly understood and fulfilled by the manufacturing organization.
- To demonstrate that the established manufacturing process has the potential to produce the part.

KEMET Automotive C-Spec	PPAP (Product Part Approval Process) Level				
	1	2	3	4	5
KEMET assigned[1]	●	●	●	●	●
AUTO	○		○		

[1] *KEMET assigned C-Specs require the submittal of a customer SCD or customer specification for review. For additional information contact KEMET.*

● Part number specific PPAP available
○ Product family PPAP only

Dimensions – Millimeters (Inches) – Standard Termination

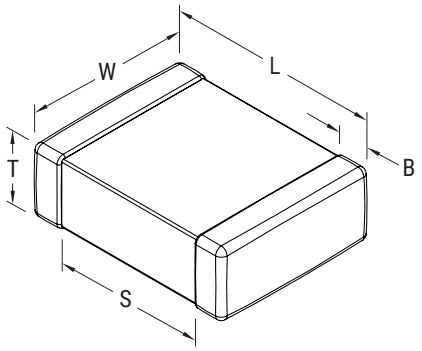

EIA Size Code	Metric Size Code	L Length	W Width	T Thickness	B Bandwidth	S Separation Minimum	Mounting Technique
0805	2012	2.00 (0.079) ±0.20 (0.008)	1.25 (0.049) ±0.20 (0.008)	See Table 2 for Thickness	0.50 (0.02) ±0.25 (0.010)	0.75 (0.030)	Solder Wave or Solder Reflow
1206	3216	3.20 (0.126) ±0.20 (0.008)	1.60 (0.063) ±0.20 (0.008)		0.50 (0.02) ±0.25 (0.010)	N/A	
1210	3225	3.20 (0.126) ±0.20 (0.008)	2.50 (0.098) ±0.20 (0.008)		0.50 (0.02) ±0.25 (0.010)		Solder Reflow Only
1812	4532	4.50 (0.177) ±0.30 (0.012)	3.20 (0.126) ±0.30 (0.012)		0.60 (0.024) ±0.35 (0.014)		

Dimensions – Millimeters (Inches) – Flexible Termination

EIA Size Code	Metric Size Code	L Length	W Width	T Thickness	B Bandwidth	S Separation Minimum	Mounting Technique
0805	2012	2.00 (0.079) ±0.30 (0.012)	1.25 (0.049) ±0.30 (0.012)	See Table 2 for Thickness	0.50 (0.02) ±0.25 (0.010)	0.75 (0.030)	Solder Wave or Solder Reflow
1206	3216	3.30 (0.130) ±0.40 (0.016)	1.60 (0.063) ±0.35 (0.013)		0.60 (0.024) ±0.25 (0.010)	N/A	
1210	3225	3.30 (0.130) ±0.40 (0.016)	2.60 (0.102) ±0.30 (0.012)		0.60 (0.024) ±0.25 (0.010)		Solder Reflow Only
1812	4532	4.50 (0.178) ±0.40 (0.016)	3.20 (0.126) ±0.30 (0.012)		0.70 (0.028) ±0.35 (0.014)		

Qualification/Certification

Commercial Grade products are subject to internal qualification. Details regarding test methods and conditions are referenced in Table 4, Performance and Reliability.

Automotive Grade products meet or exceed the requirements outlined by the Automotive Electronics Council. Details regarding test methods and conditions are referenced in document AEC–Q200, Stress Test Qualification for Passive Components. For additional information regarding the Automotive Electronics Council and AEC–Q200, please visit their website at www.aecouncil.com.

Environmental Compliance

Lead (Pb)-free, RoHS, and REACH compliant without exemptions (excluding SnPb termination finish option).

Electrical Parameters/Characteristics

Item	Parameters/Characteristics
Operating Temperature Range	−55°C to +125°C
Capacitance Change with Reference to +25°C and 0 Vdc Applied (TCC)	±15%
[1]Aging Rate (Maximum % Capacitance Loss/Decade Hour)	3.0%
[2]Dielectric Withstanding Voltage (DWV)	250% of rated voltage (5±1 seconds and charge/discharge not exceeding 50mA)
[3]Dissipation Factor (DF) Maximum Limit at 25°C	5%(6.3V & 10V), 3.5%(16V & 25V) and 2.5%(50V to 250V)
[4]Insulation Resistance (IR) Minimum Limit at 25°C	See Insulation Resistance Limit Table (Rated voltage applied for 120±5 seconds at 25°C)

[1] Regarding Aging Rate: Capacitance measurements (including tolerance) are indexed to a referee time of 1,000 hours.
[2] DWV is the voltage a capacitor can withstand (survive) for a short period of time. It exceeds the nominal and continuous working voltage of the capacitor.
[3] Capacitance and dissipation factor (DF) measured under the following conditions:
1kHz ± 50Hz and 1.0 ± 0.2 Vrms if capacitance ≤10μF
120Hz ± 10Hz and 0.5 ± 0.1 Vrms if capacitance >10μF
[4] To obtain IR limit, divide MΩ-μF value by the capacitance and compare to GΩ limit. Select the lower of the two limits.
Note: When measuring capacitance it is important to ensure the set voltage level is held constant. The HP4284 & Agilent E4980 have a feature known as Automatic Level Control (ALC). The ALC feature should be switched to "ON".

Post Environmental Limits

High Temperature Life, Biased Humidity, Moisture Resistance					
Dielectric	Rated DC Voltage	Capacitance Value	Dissipation Factor (Maximum %)	Capacitance Shift	Insulation Resistance
X7R	> 25	All	3.0	±20%	10% of Initial Limit
	16/25		5.0		
	< 16		7.5		

Insulation Resistance Limit Table (X7R Dielectric)

EIA Case Size	1,000 Megohm Microfarads or 100 GΩ	500 Megohm Microfarads or 10 GΩ
0201	N/A	ALL
0402	< 0.012 µF	≥ 0.012 µF
0603	< 0.047 µF	≥ 0.047 µF
0805	< 0.15 µF	≥ 0.15 µF
1206	< 0.47 µF	≥ 0.47 µF
1210	< 0.39 µF	≥ 0.39 µF
1808	ALL	N/A
1812	< 2.2 µF	≥ 2.2 µF
1825	ALL	N/A
2220	< 10 µF	≥ 10 µF
2225	ALL	N/A

Table 1A – Capacitance Range/Selection Waterfall - Standard Termination (0805 – 1812 Case Sizes)

Capacitance	Capacitance Code	Case Size/ Series		C0805F/J					C1206F/J					C1210F/J					C1812F/J			
		Voltage Code		4	3	5	1	2	4	3	5	1	2	4	3	5	1	2	3	5	1	2
		Rated Voltage (VDC)		16	25	50	100	200	16	25	50	100	200	16	25	50	100	200	25	50	100	200
		Capacitance Tolerance		Product Availability and Chip Thickness Codes See Table 2 for Chip Thickness Dimensions																		
1,000 pF	102	K	M	DP	DP	DP	DP	DP														
1,200 pF	122	K	M	DP	DP	DP	DP	DP														
1,500 pF	152	K	M	DP	DP	DP	DP	DP														
1,800 pF	182	K	M	DP	DP	DP	DP	DP														
2,200 pF	222	K	M	DP	DP	DP	DP	DP														
2,700 pF	272	K	M	DP	DP	DP	DP	DP														
3,300 pF	332	K	M	DP	DP	DP	DP	DP														
3,900 pF	392	K	M	DP	DP	DP	DP	DP														
4,700 pF	472	K	M	DP	DP	DP	DP	DP														
5,600 pF	562	K	M	DP	DP	DP	DP	DP														
6,800 pF	682	K	M	DP	DP	DP	DP	DP														
8,200 pF	822	K	M	DP	DP	DP	DP	DP														
10,000 pF	103	K	M	DP	DP	DP	DP	DP														
12,000 pF	123	K	M	DP	DP	DP	DP	DG														
15,000 pF	153	K	M	DP	DP	DP	DP	DG														
18,000 pF	183	K	M	DP	DP	DP	DP		ER	ER	ER	ER	ER									
22,000 pF	223	K	M	DP	DP	DP	DG		ER	ER	ER	ER	ER									
27,000 pF	273	K	M	DP	DP	DP	DG		ER	ER	ER	ER	ER									
33,000 pF	333	K	M	DP	DP	DP	DG		ER	ER	ER	ER	ER									
39,000 pF	393	K	M	DP	DP	DP	DG		ER	ER	ER	ER	ER									
47,000 pF	473	K	M	DP	DP	DP	DS		ER	ER	ER	ER	EU						GB	GB	GB	GB
56,000 pF	563	K	M	DP	DP	DP			ER	ER	ER	ER	EU						GB	GB	GB	GB
68,000 pF	683	K	M	DP	DP	DG	DG		ER	ER	ER	ER	EU	FX	FX	FX	FX	FX	GB	GB	GB	GB
82,000 pF	823	K	M	DP	DP	DG			ER	ER	ER	ER	EU	FX	FX	FX	FX	FX	GB	GB	GB	GB
0.10 µF	104	K	M	DG	DG	DG			ER	ER	ER	ER	EU	FX	FX	FX	FX	FZ	GB	GB	GB	GB
0.12 µF	124	K	M	DG	DG				ER	ER	ER	ER		FX	FX	FX	FX	FZ	GB	GB	GB	GB
0.15 µF	154	K	M	DG	DG				ER	ER	ER	EU		FX	FX	FX	FX	FU	GB	GB	GB	GB
0.18 µF	184	K	M	DG	DG				ER	ER	ER	EU		FX	FX	FX	FX	FU	GB	GB	GB	GB
0.22 µF	224	K	M	DG	DP	DG			ER	ER	ER	ES		FX	FX	FX	FZ	FS	GB	GB	GB	GC
0.27 µF	274	K	M	DP	DP				ER	ER	ER			FX	FX	FX	FZ		GB	GB	GB	GF
0.33 µF	334	K	M	DP	DG				EU	EU	EU	EU		FX	FX	FX	FU		GB	GB	GB	GK
0.39 µF	394	K	M	DP	DG				EU	EU				FX	FX	FZ	FU		GB	GB	GB	GL
0.47 µF	474	K	M	DS	DG				EU	EU	ER			FX	FX	FZ	FJ		GB	GB	GC	
0.56 µF	564	K	M						EU					FX	FX	FZ	FR		GB	GB	GD	
0.68 µF	684	K	M	DG					EU					FX	FZ	FU	FR		GD	GD	GF	
0.82 µF	824	K	M						EU					FX	FZ	FU	FR		GD	GD	GK	
1.0 µF	105	K	M						EU	ER	EH			FX	FU	FJ	FS		GN	GN	GM	
1.2 µF	125	K	M											FZ								
1.5 µF	155	K	M											FU								
1.8 µF	185	K	M											FU								
2.2 µF	225	K	M						ER	EH				FJ	FM	FM						
2.7 µF	275	K	M																			
3.3 µF	335	K	M											FM								
3.9 µF	395	K	M																			
4.7 µF	475	K	M						EH					FZ	FM				GK	GK		
6.8 µF	685	K	M											FS	FS							
Capacitance	Capacitance Code	Rated Voltage (VDC)		16	25	50	100	200	16	25	50	100	200	16	25	50	100	200	25	50	100	200
		Voltage Code		4	3	5	1	2	4	3	5	1	2	4	3	5	1	2	3	5	1	2
		Case Size/ Series		C0805F/J					C1206F/J					C1210F/J					C1812F/J			

Table 1B – Capacitance Range/Selection Waterfall - Flexible Termination (0805 – 1812 Case Sizes)

Capacitance	Capacitance Code	Case Size/ Series		C0805F/J					C1206F/J					C1210F/J					C1812F/J			
		Voltage Code		4	3	5	1	2	4	3	5	1	2	4	3	5	1	2	3	5	1	2
		Rated Voltage (VDC)		16	25	50	100	200	16	25	50	100	200	16	25	50	100	200	25	50	100	200
		Capacitance Tolerance		Product Availability and Chip Thickness Codes See Table 2 for Chip Thickness Dimensions																		
1,000 pF	102	K	M	DD	DD	DD	DD	DD														
1,200 pF	122	K	M	DD	DD	DD	DD	DD														
1,500 pF	152	K	M	DD	DD	DD	DD	DD														
1,800 pF	182	K	M	DD	DD	DD	DD	DD														
2,200 pF	222	K	M	DD	DD	DD	DD	DD														
2,700 pF	272	K	M	DD	DD	DD	DD	DD														
3,300 pF	332	K	M	DD	DD	DD	DD	DD														
3,900 pF	392	K	M	DD	DD	DD	DD	DD														
4,700 pF	472	K	M	DD	DD	DD	DD	DD														
5,600 pF	562	K	M	DD	DD	DD	DD	DD														
6,800 pF	682	K	M	DD	DD	DD	DD	DD														
8,200 pF	822	K	M	DD	DD	DD	DD	DD														
10,000 pF	103	K	M	DD	DD	DD	DD	DD														
12,000 pF	123	K	M	DD	DD	DD	DD	DG														
15,000 pF	153	K	M	DD	DD	DD	DD	DG														
18,000 pF	183	K	M	DD	DD	DD	DD		ER	ER	ER	ER	ER									
22,000 pF	223	K	M	DD	DD	DD	DG		ER	ER	ER	ER	ER									
27,000 pF	273	K	M	DD	DD	DD	DG		ER	ER	ER	ER	ER									
33,000 pF	333	K	M	DD	DD	DD	DG		ER	ER	ER	ER	ER									
39,000 pF	393	K	M	DD	DD	DD	DG		ER	ER	ER	ER	ER									
47,000 pF	473	K	M	DD	DD	DD	DS		ER	ER	ER	ER	EU						GB	GB	GB	GB
56,000 pF	563	K	M	DD	DD	DD			ER	ER	ER	ER	EU						GB	GB	GB	GB
68,000 pF	683	K	M	DD	DD	DG	DG		ER	ER	ER	ER	EU	FX	FX	FX	FX	FX	GB	GB	GB	GB
82,000 pF	823	K	M	DD	DD	DG			ER	ER	ER	ER	EU	FX	FX	FX	FX	FX	GB	GB	GB	GB
0.10 µF	104	K	M	DG	DG	DG			ER	ER	ER	ER	EU	FX	FX	FX	FX	FZ	GB	GB	GB	GB
0.12 µF	124	K	M	DG	DG				ER	ER	ER	ER		FX	FX	FX	FX	FZ	GB	GB	GB	GB
0.15 µF	154	K	M	DG	DG				ER	ER	ER	EU		FX	FX	FX	FX	FU	GB	GB	GB	GB
0.18 µF	184	K	M	DG	DG				ER	ER	ER	EU		FX	FX	FX	FX	FU	GB	GB	GB	GB
0.22 µF	224	K	M	DG	DD	DG			ER	ER	ER	ES		FX	FX	FX	FZ	FS	GB	GB	GB	GC
0.27 µF	274	K	M	DD	DD				ER	ER	ER			FX	FX	FX	FZ		GB	GB	GB	GF
0.33 µF	334	K	M	DD	DG				EU	EU	EU	EU		FX	FX	FX	FU		GB	GB	GB	GK
0.39 µF	394	K	M	DD	DG				EU	EU				FX	FX	FZ	FU		GB	GB	GB	GL
0.47 µF	474	K	M	DS	DG				EU	EU	ER			FX	FX	FZ	FJ		GB	GB	GC	
0.56 µF	564	K	M						EU					FX	FX	FZ	FR		GB	GB	GD	
0.68 µF	684	K	M	DG					EU					FX	FZ	FU	FR		GD	GD	GF	
0.82 µF	824	K	M						EU					FX	FZ	FU	FR		GD	GD	GK	
1.0 µF	105	K	M						EU	ER	EH			FX	FU	FJ	FS		GN	GN	GM	
1.2 µF	125	K	M											FZ								
1.5 µF	155	K	M											FU								
1.8 µF	185	K	M											FU								
2.2 µF	225	K	M						ER	EH				FJ	FM	FM						
2.7 µF	275	K	M																			
3.3 µF	335	K	M											FM								
3.9 µF	395	K	M																			
4.7 µF	475	K	M						EH					FZ	FM				GK	GK		
6.8 µF	685	K	M											FS	FS							
Capacitance	Capacitance Code	Rated Voltage (VDC)		16	25	50	100	200	16	25	50	100	200	16	25	50	100	200	25	50	100	200
		Voltage Code		4	3	5	1	2	4	3	5	1	2	4	3	5	1	2	3	5	1	2
		Case Size/ Series		C0805F/J					C1206F/J					C1210F/J					C1812F/J			

Table 2A – Chip Thickness/Tape & Reel Packaging Quantities - Standard Termination

Thickness Code	Case Size	Thickness ± Range (mm)	Paper Quantity		Plastic Quantity	
			7" Reel	13" Reel	7" Reel	13" Reel
DP	0805	0.90 ± 0.10*	4,000	15,000	0	0
DS	0805	1.00 ± 0.20	0	0	2,500	10,000
DG	0805	1.25 ± 0.15	0	0	2,500	10,000
ER	1206	0.90 ± 0.20	0	0	4,000	10,000
ES	1206	1.00 ± 0.20	0	0	2,500	10,000
EH	1206	1.60 ± 0.20	0	0	2,000	8,000
EU	1206	1.60 ± 0.25	0	0	2,000	8,000
FX	1210	0.95 ± 0.20	0	0	4,000	10,000
FZ	1210	1.25 ± 0.20	0	0	2,500	10,000
FU	1210	1.55 ± 0.20	0	0	2,000	8,000
FM	1210	1.70 ± 0.20	0	0	2,000	8,000
FJ	1210	1.85 ± 0.20	0	0	2,000	8,000
FR	1210	2.25 ± 0.20	0	0	2,000	8,000
FS	1210	2.50 ± 0.30	0	0	1,000	4,000
GB	1812	1.00 ± 0.10	0	0	1,000	4,000
GC	1812	1.10 ± 0.10	0	0	1,000	4,000
GD	1812	1.25 ± 0.15	0	0	1,000	4,000
GF	1812	1.50 ± 0.10	0	0	1,000	4,000
GK	1812	1.60 ± 0.20	0	0	1,000	4,000
GN	1812	1.70 ± 0.20	0	0	1,000	4,000
GL	1812	1.90 ± 0.20	0	0	500	2,000
GM	1812	2.00 ± 0.20	0	0	500	2,000
Thickness Code	**Case Size**	**Thickness ± Range (mm)**	**7" Reel**	**13" Reel**	**7" Reel**	**13" Reel**
			Paper Quantity		**Plastic Quantity**	

Package quantity based on finished chip thickness specifications.

Table 2B – Chip Thickness/Tape & Reel Packaging Quantities - Flexible Termination

Thickness Code	Case Size	Thickness ± Range (mm)	Paper Quantity		Plastic Quantity	
			7" Reel	13" Reel	7" Reel	13" Reel
DD	0805	0.90 ± 0.10	0	0	4,000	10,000
DS	0805	1.00 ± 0.20	0	0	2,500	10,000
DG	0805	1.25 ± 0.15	0	0	2,500	10,000
ER	1206	0.90 ± 0.20	0	0	4,000	10,000
ES	1206	1.00 ± 0.20	0	0	2,500	10,000
EH	1206	1.60 ± 0.20	0	0	2,000	8,000
EU	1206	1.60 ± 0.25	0	0	2,000	8,000
FX	1210	0.95 ± 0.20	0	0	4,000	10,000
FZ	1210	1.25 ± 0.20	0	0	2,500	10,000
FU	1210	1.55 ± 0.20	0	0	2,000	8,000
FM	1210	1.70 ± 0.20	0	0	2,000	8,000
FJ	1210	1.85 ± 0.20	0	0	2,000	8,000
FR	1210	2.25 ± 0.20	0	0	2,000	8,000
FS	1210	2.50 ± 0.30	0	0	1,000	4,000
GB	1812	1.00 ± 0.10	0	0	1,000	4,000
GC	1812	1.10 ± 0.10	0	0	1,000	4,000
GD	1812	1.25 ± 0.15	0	0	1,000	4,000
GF	1812	1.50 ± 0.10	0	0	1,000	4,000
GK	1812	1.60 ± 0.20	0	0	1,000	4,000
GN	1812	1.70 ± 0.20	0	0	1,000	4,000
GL	1812	1.90 ± 0.20	0	0	500	2,000
GM	1812	2.00 ± 0.20	0	0	500	2,000
Thickness Code	**Case Size**	**Thickness ± Range (mm)**	**7" Reel**	**13" Reel**	**7" Reel**	**13" Reel**
			Paper Quantity		**Plastic Quantity**	

Package quantity based on finished chip thickness specifications.

Table 2C – Bulk Packaging Quantities

Packaging Type		Loose Packaging	
		Bulk Bag (default)	
Packaging C-Spec[1]		N/A[2]	
Case Size		Packaging Quantities (pieces/unit packaging)	
EIA (in)	Metric (mm)	Minimum	Maximum
0402	1005	1	50,000
0603	1608		
0805	2012		
1206	3216		
1210	3225		
1808	4520		20,000
1812	4532		
1825	4564		
2220	5650		
2225	5664		

[1] *The "Packaging C-Spec" is a 4 to 8 digit code which identifies the packaging type and/or product grade. When ordering, the proper code must be included in the 15th through 22nd character positions of the ordering code. See "Ordering Information" section of this document for further details. Commercial Grade product ordered without a packaging C-Spec will default to our standard "Bulk Bag" packaging. Contact KEMET if you require a bulk bag packaging option for Automotive Grade products.*

[2] *A packaging C-Spec (see note 1 above) is not required for "Bulk Bag" packaging (excluding Anti-Static Bulk Bag and Automotive Grade products). The 15th through 22nd character positions of the ordering code should be left blank. All product ordered without a packaging C-Spec will default to our standard "Bulk Bag" packaging.*

Table 3A – Land Pattern Design Recommendations per IPC–7351 – Standard Termination

EIA Size Code	Metric Size Code	Density Level A: Maximum (Most) Land Protrusion (mm)					Density Level B: Median (Nominal) Land Protrusion (mm)					Density Level C: Minimum (Least) Land Protrusion (mm)				
		C	Y	X	V1	V2	C	Y	X	V1	V2	C	Y	X	V1	V2
0805	2012	1.00	1.35	1.55	4.40	2.60	0.90	1.15	1.45	3.50	2.00	0.75	0.95	1.35	2.80	1.70
1206	3216	1.60	1.35	1.90	5.60	2.90	1.50	1.15	1.80	4.70	2.30	1.40	0.95	1.70	4.00	2.00
1210	3225	1.60	1.35	2.80	5.65	3.80	1.50	1.15	2.70	4.70	3.20	1.40	0.95	2.60	4.00	2.90
1210[1]	3225	1.50	1.60	2.90	5.60	3.90	1.40	1.40	2.80	4.70	3.30	1.30	1.20	2.70	4.00	3.00
1812	4532	2.15	1.60	3.60	6.90	4.60	2.05	1.40	3.50	6.00	4.00	1.95	1.20	3.40	5.30	3.70

[1] *Only for capacitance values ≥ 22 µF*

Density Level A: *For low-density product applications. Recommended for wave solder applications and provides a wider process window for reflow solder processes. KEMET only recommends wave soldering of EIA 0603, 0805 and 1206 case sizes.*

Density Level B: *For products with a moderate level of component density. Provides a robust solder attachment condition for reflow solder processes.*

Density Level C: *For high component density product applications. Before adapting the minimum land pattern variations the user should perform qualification testing based on the conditions outlined in IPC Standard 7351 (IPC–7351).*

Image below based on Density Level B for an EIA 1210 case size.

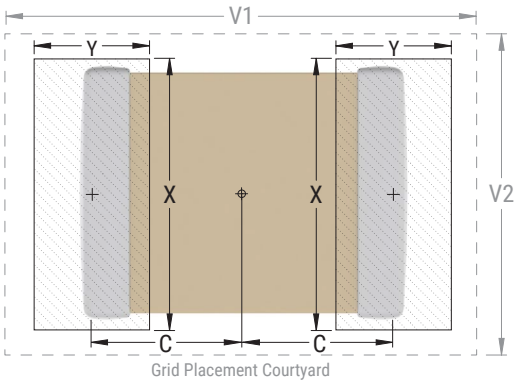

Table 3B – Land Pattern Design Recommendations per IPC–7351 – Flexible Termination

EIA Size Code	Metric Size Code	Density Level A: Maximum (Most) Land Protrusion (mm)					Density Level B: Median (Nominal) Land Protrusion (mm)					Density Level C: Minimum (Least) Land Protrusion (mm)				
		C	Y	X	V1	V2	C	Y	X	V1	V2	C	Y	X	V1	V2
0805	2012	0.99	1.44	1.66	4.47	2.71	0.89	1.24	1.56	3.57	2.11	0.79	1.04	1.46	2.42	1.81
1206	3216	1.59	1.62	2.06	5.85	3.06	1.49	1.42	1.96	4.95	2.46	1.39	1.22	1.86	4.25	2.16
1210	3225	1.59	1.62	3.01	5.90	4.01	1.49	1.42	2.91	4.95	3.41	1.39	1.22	2.81	4.25	3.11
1812	4532	2.10	1.80	3.60	7.00	4.60	2.00	1.60	3.50	6.10	4.00	1.90	1.40	3.40	5.40	3.70

Density Level A: *For low-density product applications. Recommended for wave solder applications and provides a wider process window for reflow solder processes. KEMET only recommends wave soldering of EIA 0603, 0805 and 1206 case sizes.*
Density Level B: *For products with a moderate level of component density. Provides a robust solder attachment condition for reflow solder processes.*
Density Level C: *For high component density product applications. Before adapting the minimum land pattern variations the user should perform qualification testing based on the conditions outlined in IPC Standard 7351 (IPC–7351).*

Image below based on Density Level B for an EIA 1210 case size.

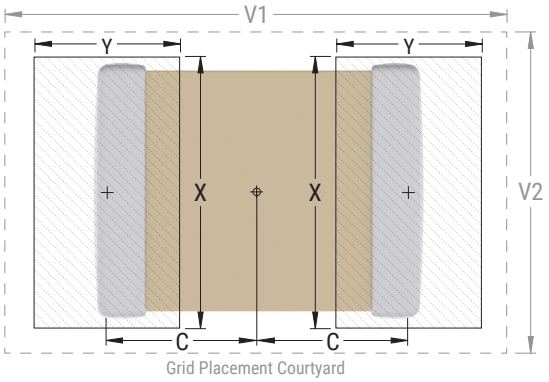

Soldering Process

Recommended Soldering Technique:

- Solder wave or solder reflow for EIA case sizes 0603, 0805 and 1206
- All other EIA case sizes are limited to solder reflow only

Recommended Reflow Soldering Profile:

KEMET's families of surface mount multilayer ceramic capacitors (SMD MLCCs) are compatible with wave (single or dual), convection, IR or vapor phase reflow techniques. Preheating of these components is recommended to avoid extreme thermal stress. KEMET's recommended profile conditions for convection and IR reflow reflect the profile conditions of the IPC/J-STD-020 standard for moisture sensitivity testing. These devices can safely withstand a maximum of three reflow passes at these conditions.

Profile Feature	Termination Finish	
	SnPb	100% Matte Sn
Preheat/Soak		
Temperature Minimum (T_{Smin})	100°C	150°C
Temperature Maximum (T_{Smax})	150°C	200°C
Time (t_S) from T_{Smin} to T_{Smax}	60 – 120 seconds	60 – 120 seconds
Ramp-Up Rate (T_L to T_P)	3°C/second maximum	3°C/second maximum
Liquidous Temperature (T_L)	183°C	217°C
Time Above Liquidous (t_L)	60 – 150 seconds	60 – 150 seconds
Peak Temperature (T_P)	235°C	260°C
Time Within 5°C of Maximum Peak Temperature (t_P)	20 seconds maximum	30 seconds maximum
Ramp-Down Rate (T_P to T_L)	6°C/second maximum	6°C/second maximum
Time 25°C to Peak Temperature	6 minutes maximum	8 minutes maximum

Note 1: All temperatures refer to the center of the package, measured on the capacitor body surface that is facing up during assembly reflow.

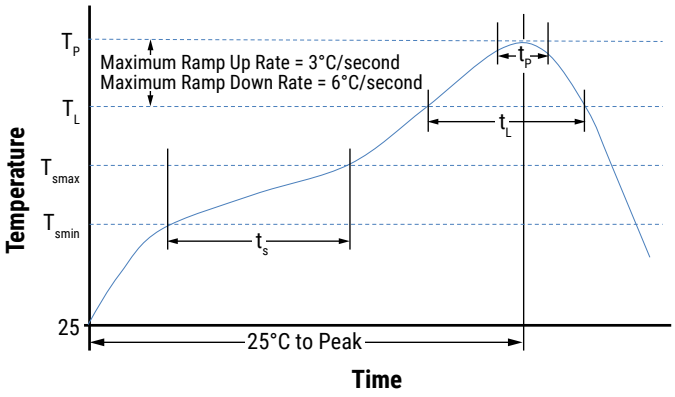

Table 4 – Performance & Reliability: Test Methods and Conditions

Stress	Reference	Test or Inspection Method
Terminal Strength	JIS–C–6429	Appendix 1, Note: Force of 1.8 kg for 60 seconds.
Board Flex	JIS–C–6429	Appendix 2, Note: Standard termination system – 2.0 mm (minimum) for all except 3 mm for C0G. Flexible termination system – 3.0 mm (minimum).
Solderability	J–STD–002	Magnification 50 X. Conditions:
		a) Method B, 4 hours at 155°C, dry heat at 235°C
		b) Method B at 215°C category 3
		c) Method D, category 3 at 260°C
Temperature Cycling	JESD22 Method JA–104	1,000 Cycles (–55°C to +125°C). Measurement at 24 hours +/– 4 hours after test conclusion.
Biased Humidity	MIL–STD–202 Method 103	Load Humidity: 1,000 hours 85°C/85% RH and rated voltage. Add 100 K ohm resistor. Measurement at 24 hours +/– 4 hours after test conclusion.
		Low Volt Humidity: 1,000 hours 85°C/85% RH and 1.5 V. Add 100 K ohm resistor. Measurement at 24 hours +/– 4 hours after test conclusion.
Moisture Resistance	MIL–STD–202 Method 106	t = 24 hours/cycle. Steps 7a and 7b not required. Measurement at 24 hours +/– 4 hours after test conclusion.
Thermal Shock	MIL–STD–202 Method 107	–55°C/+125°C. Note: Number of cycles required – 300, maximum transfer time – 20 seconds, dwell time – 15 minutes. Air – Air.
High Temperature Life	MIL–STD–202 Method 108 /EIA–198	1,000 hours at 125°C (85°C for X5R, Z5U and Y5V) with 2 X rated voltage applied.
Storage Life	MIL–STD–202 Method 108	150°C, 0 VDC for 1,000 hours.
Vibration	MIL–STD–202 Method 204	5 g's for 20 min., 12 cycles each of 3 orientations. Note: Use 8" X 5" PCB 0.031" thick 7 secure points on one long side and 2 secure points at corners of opposite sides. Parts mounted within 2" from any secure point. Test from 10 – 2,000 Hz
Mechanical Shock	MIL–STD–202 Method 213	Figure 1 of Method 213, Condition F.
Resistance to Solvents	MIL–STD–202 Method 215	Add aqueous wash chemical, OKEM Clean or equivalent.

Storage and Handling

Ceramic chip capacitors should be stored in normal working environments. While the chips themselves are quite robust in other environments, solderability will be degraded by exposure to high temperatures, high humidity, corrosive atmospheres, and long term storage. In addition, packaging materials will be degraded by high temperature–reels may soften or warp and tape peel force may increase. KEMET recommends that maximum storage temperature not exceed 40ºC and maximum storage humidity not exceed 70% relative humidity. Temperature fluctuations should be minimized to avoid condensation on the parts and atmospheres should be free of chlorine and sulfur bearing compounds. For optimized solderability chip stock should be used promptly, preferably within 1.5 years of receipt.

Construction – Standard Termination

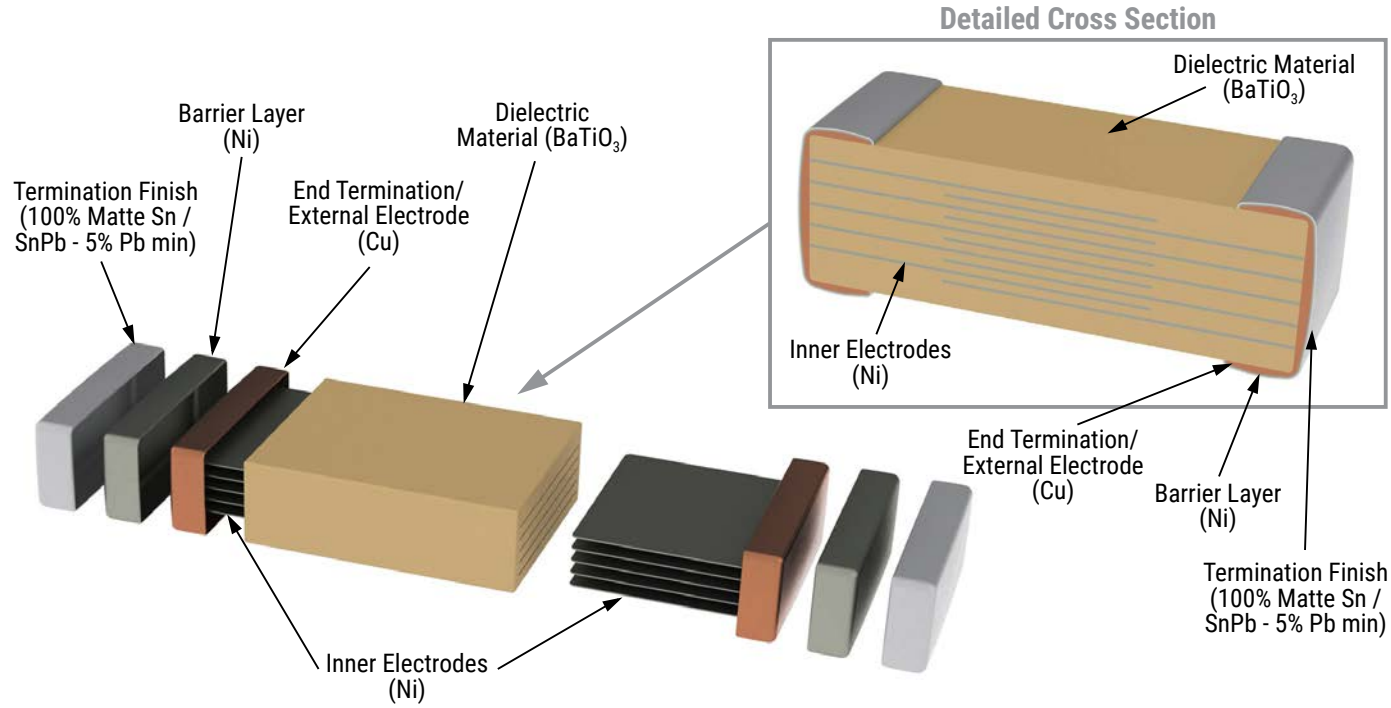

Construction – Flexible Termination

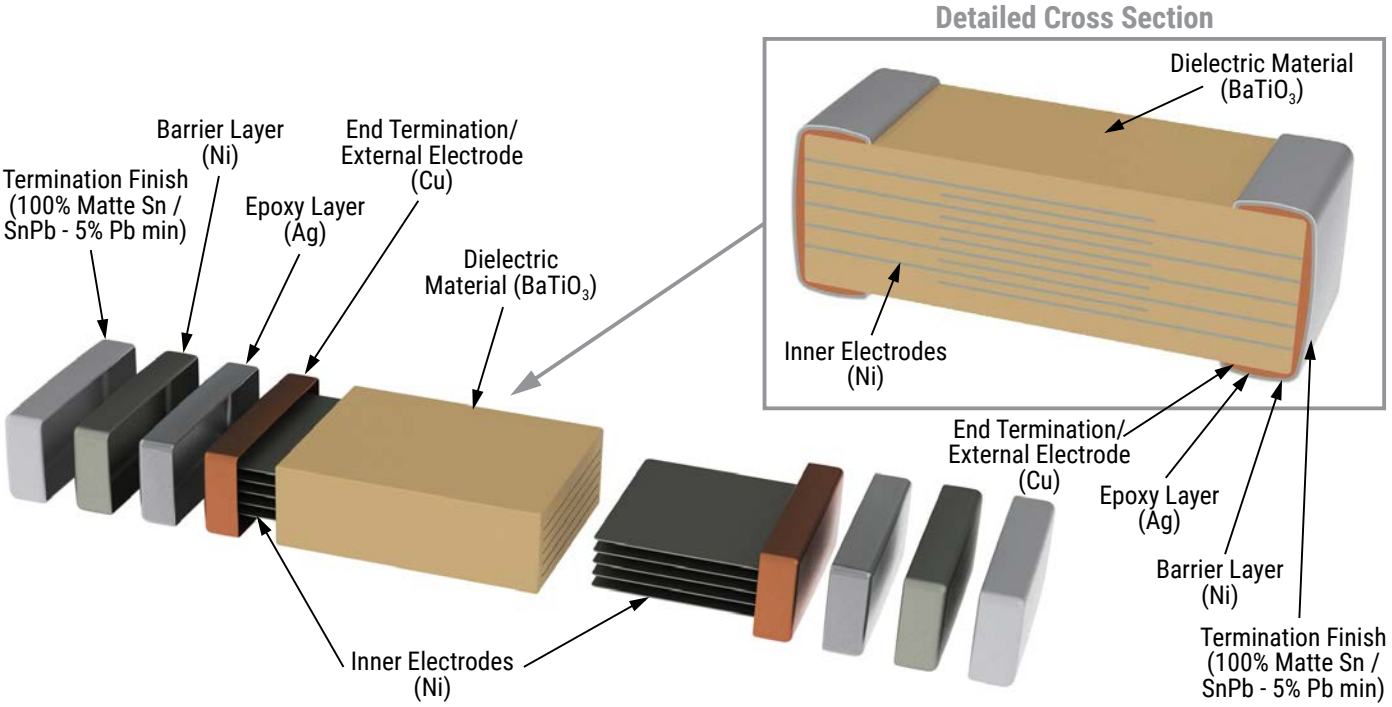

Capacitor Marking (Optional):

These surface mount multilayer ceramic capacitors are normally supplied unmarked. If required, they can be marked as an extra cost option. Marking is available on most KEMET devices but must be requested using the correct ordering code identifier(s). If this option is requested, two sides of the ceramic body will be laser marked with a "K" to identify KEMET, followed by two characters (per EIA–198 - see table below) to identify the capacitance value. EIA 0603 case size devices are limited to the "K" character only.

Laser marking option is not available on:

- C0G, Ultra Stable X8R and Y5V dielectric devices.
- EIA 0402 case size devices.
- EIA 0603 case size devices with Flexible Termination option.
- KPS Commercial and Automotive Grade stacked devices.
- X7R dielectric products in capacitance values outlined below.

EIA Case Size	Metric Size Code	Capacitance
0603	1608	≤ 170 pF
0805	2012	≤ 150 pF
1206	3216	≤ 910 pF
1210	3225	≤ 2,000 pF
1808	4520	≤ 3,900 pF
1812	4532	≤ 6,700 pF
1825	4564	≤ 0.018 µF
2220	5650	≤ 0.027 µF
2225	5664	≤ 0.033 µF

Marking appears in legible contrast. Illustrated below is an example of an MLCC with laser marking of "KA8", which designates a KEMET device with rated capacitance of 100 µF. Orientation of marking is vendor optional.

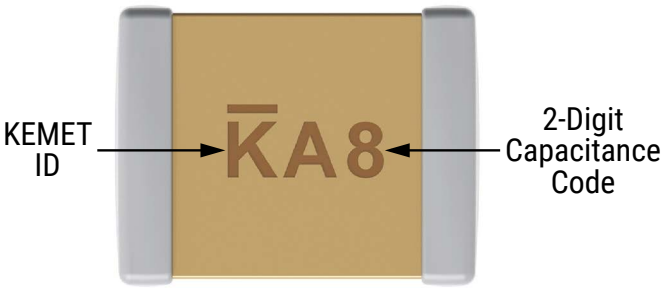

Capacitor Marking (Optional) cont'd

Capacitance (pF) For Various Alpha/Numeral Identifiers										
Alpha Character	Numeral									
	9	0	1	2	3	4	5	6	7	8
	Capacitance (pF)									
A	0.10	1.0	10	100	1,000	10,000	100,000	1,000,000	10,000,000	100,000,000
B	0.11	1.1	11	110	1,100	11,000	110,000	1,100,000	11,000,000	110,000,000
C	0.12	1.2	12	120	1,200	12,000	120,000	1,200,000	12,000,000	120,000,000
D	0.13	1.3	13	130	1,300	13,000	130,000	1,300,000	13,000,000	130,000,000
E	0.15	1.5	15	150	1,500	15,000	150,000	1,500,000	15,000,000	150,000,000
F	0.16	1.6	16	160	1,600	16,000	160,000	1,600,000	16,000,000	160,000,000
G	0.18	1.8	18	180	1,800	18,000	180,000	1,800,000	18,000,000	180,000,000
H	0.20	2.0	20	200	2,000	20,000	200,000	2,000,000	20,000,000	200,000,000
J	0.22	2.2	22	220	2,200	22,000	220,000	2,200,000	22,000,000	220,000,000
K	0.24	2.4	24	240	2,400	24,000	240,000	2,400,000	24,000,000	240,000,000
L	0.27	2.7	27	270	2,700	27,000	270,000	2,700,000	27,000,000	270,000,000
M	0.30	3.0	30	300	3,000	30,000	300,000	3,000,000	30,000,000	300,000,000
N	0.33	3.3	33	330	3,300	33,000	330,000	3,300,000	33,000,000	330,000,000
P	0.36	3.6	36	360	3,600	36,000	360,000	3,600,000	36,000,000	360,000,000
Q	0.39	3.9	39	390	3,900	39,000	390,000	3,900,000	39,000,000	390,000,000
R	0.43	4.3	43	430	4,300	43,000	430,000	4,300,000	43,000,000	430,000,000
S	0.47	4.7	47	470	4,700	47,000	470,000	4,700,000	47,000,000	470,000,000
T	0.51	5.1	51	510	5,100	51,000	510,000	5,100,000	51,000,000	510,000,000
U	0.56	5.6	56	560	5,600	56,000	560,000	5,600,000	56,000,000	560,000,000
V	0.62	6.2	62	620	6,200	62,000	620,000	6,200,000	62,000,000	620,000,000
W	0.68	6.8	68	680	6,800	68,000	680,000	6,800,000	68,000,000	680,000,000
X	0.75	7.5	75	750	7,500	75,000	750,000	7,500,000	75,000,000	750,000,000
Y	0.82	8.2	82	820	8,200	82,000	820,000	8,200,000	82,000,000	820,000,000
Z	0.91	9.1	91	910	9,100	91,000	910,000	9,100,000	91,000,000	910,000,000
a	0.25	2.5	25	250	2,500	25,000	250,000	2,500,000	25,000,000	250,000,000
b	0.35	3.5	35	350	3,500	35,000	350,000	3,500,000	35,000,000	350,000,000
d	0.40	4.0	40	400	4,000	40,000	400,000	4,000,000	40,000,000	400,000,000
e	0.45	4.5	45	450	4,500	45,000	450,000	4,500,000	45,000,000	450,000,000
f	0.50	5.0	50	500	5,000	50,000	500,000	5,000,000	50,000,000	500,000,000
m	0.60	6.0	60	600	6,000	60,000	600,000	6,000,000	60,000,000	600,000,000
n	0.70	7.0	70	700	7,000	70,000	700,000	7,000,000	70,000,000	700,000,000
t	0.80	8.0	80	800	8,000	80,000	800,000	8,000,000	80,000,000	800,000,000
y	0.90	9.0	90	900	9,000	90,000	900,000	9,000,000	90,000,000	900,000,000

Tape & Reel Packaging Information

KEMET offers multilayer ceramic chip capacitors packaged in 8, 12 and 16 mm tape on 7" and 13" reels in accordance with EIA Standard 481. This packaging system is compatible with all tape-fed automatic pick and place systems. See Table 2 for details on reeling quantities for commercial chips.

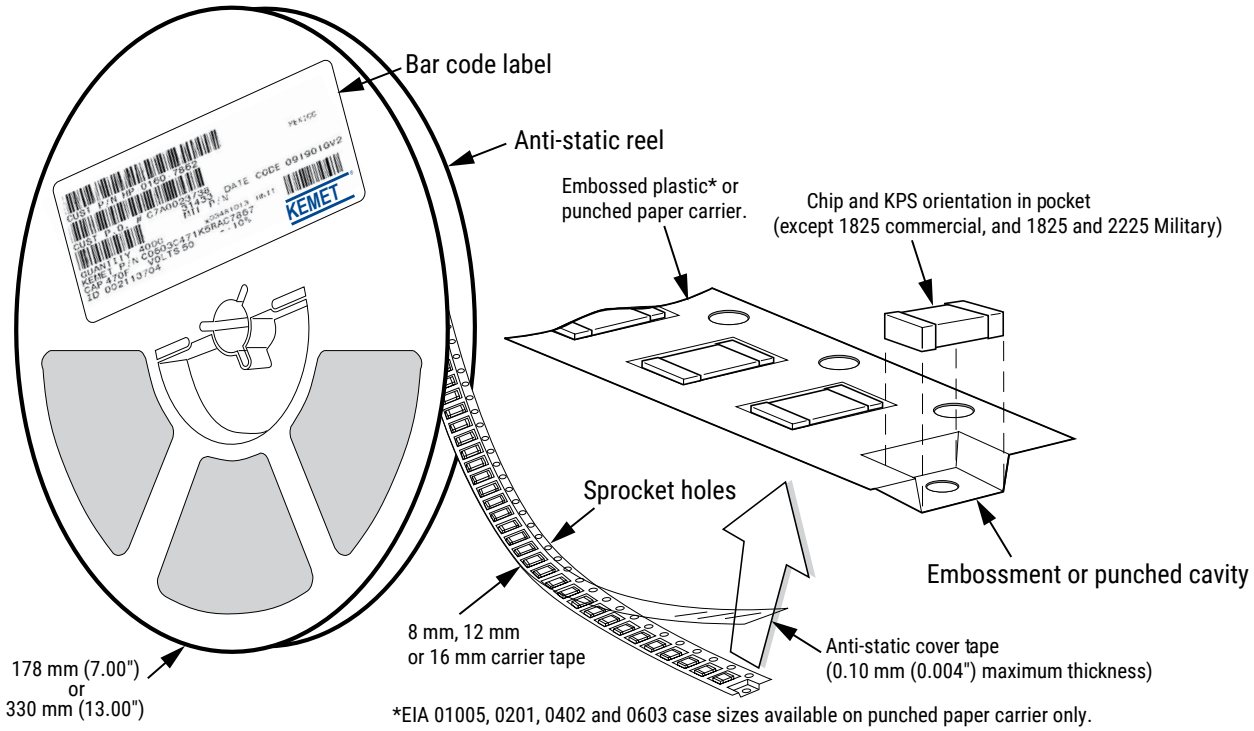

Table 5 – Carrier Tape Configuration, Embossed Plastic & Punched Paper (mm)

EIA Case Size	Tape Size (W)*	Embossed Plastic		Punched Paper	
		7" Reel	13" Reel	7" Reel	13" Reel
		Pitch (P_1)*		Pitch (P_1)*	
01005 – 0402	8			2	2
0603	8			2/4	2/4
0805	8	4	4	4	4
1206 – 1210	8	4	4	4	4
1805 – 1808	12	4	4		
≥ 1812	12	8	8		
KPS 1210	12	8	8		
KPS 1812 and 2220	16	12	12		
Array 0612	8	4	4		

**Refer to Figures 1 and 2 for W and P_1 carrier tape reference locations.*
**Refer to Tables 6 and 7 for tolerance specifications.*

New 2 mm Pitch Reel Options*

Packaging Ordering Code (C-Spec)	Packaging Type/Options
C-3190	Automotive grade 7" reel unmarked
C-3191	Automotive grade 13" reel unmarked
C-7081	Commercial grade 7" reel unmarked
C-7082	Commercial grade 13" reel unmarked

** 2 mm pitch reel only available for 0603 EIA case size.*
2 mm pitch reel for 0805 EIA case size under development.

Benefits of Changing from 4 mm to 2 mm Pitching Spacing

- Lower placement costs.
- Double the parts on each reel results in fewer reel changes and increased efficiency.
- Fewer reels result in lower packaging, shipping and storage costs, reducing waste.

Figure 1 – Embossed (Plastic) Carrier Tape Dimensions

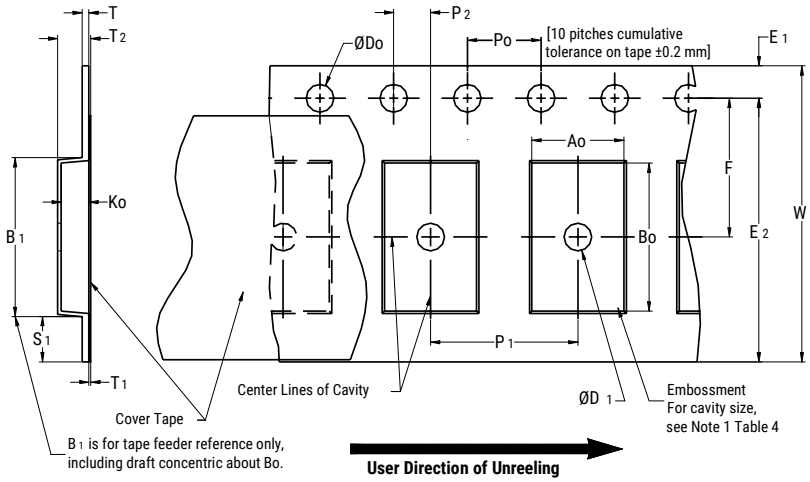

Table 6 – Embossed (Plastic) Carrier Tape Dimensions

Metric will govern

Constant Dimensions — Millimeters (Inches)									
Tape Size	D_0	D_1 Minimum Note 1	E_1	P_0	P_2	R Reference Note 2	S_1 Minimum Note 3	T Maximum	T_1 Maximum
8 mm	1.5 +0.10/−0.0 (0.059 +0.004/−0.0)	1.0 (0.039)	1.75 ±0.10 (0.069 ±0.004)	4.0 ±0.10 (0.157 ±0.004)	2.0 ±0.05 (0.079 ±0.002)	25.0 (0.984)	0.600 (0.024)	0.600 (0.024)	0.100 (0.004)
12 mm		1.5 (0.059)				30 (1.181)			
16 mm									

Variable Dimensions — Millimeters (Inches)								
Tape Size	Pitch	B_1 Maximum Note 4	E_2 Minimum	F	P_1	T_2 Maximum	W Maximum	A_0,B_0 & K_0
8 mm	Single (4 mm)	4.35 (0.171)	6.25 (0.246)	3.5 ±0.05 (0.138 ±0.002)	4.0 ±0.10 (0.157 ±0.004)	2.5 (0.098)	8.3 (0.327)	Note 5
12 mm	Single (4 mm) and Double (8 mm)	8.2 (0.323)	10.25 (0.404)	5.5 ±0.05 (0.217 ±0.002)	8.0 ±0.10 (0.315 ±0.004)	4.6 (0.181)	12.3 (0.484)	
16 mm	Triple (12 mm)	12.1 (0.476)	14.25 (0.561)	7.5 ±0.05 (0.138 ±0.002)	12.0 ±0.10 (0.157 ±0.004)	4.6 (0.181)	16.3 (0.642)	

1. The embossment hole location shall be measured from the sprocket hole controlling the location of the embossment. Dimensions of embossment location and hole location shall be applied independent of each other.
2. The tape with or without components shall pass around R without damage (see Figure 6).
3. If S_1 < 1.0 mm, there may not be enough area for cover tape to be properly applied (see EIA Standard 481 paragraph 4.3 section b).
4. B_1 dimension is a reference dimension for tape feeder clearance only.
5. The cavity defined by A_0, B_0 and K_0 shall surround the component with sufficient clearance that:
(a) the component does not protrude above the top surface of the carrier tape.
(b) the component can be removed from the cavity in a vertical direction without mechanical restriction, after the top cover tape has been removed.
(c) rotation of the component is limited to 20° maximum for 8 and 12 mm tapes and 10° maximum for 16 mm tapes (see Figure 3).
(d) lateral movement of the component is restricted to 0.5 mm maximum for 8 and 12 mm wide tape and to 1.0 mm maximum for 16 mm tape (see Figure 4).
(e) for KPS product, A_0 and B_0 are measured on a plane 0.3 mm above the bottom of the pocket.
(f) see addendum in EIA Standard 481 for standards relating to more precise taping requirements.

Figure 2 – Punched (Paper) Carrier Tape Dimensions

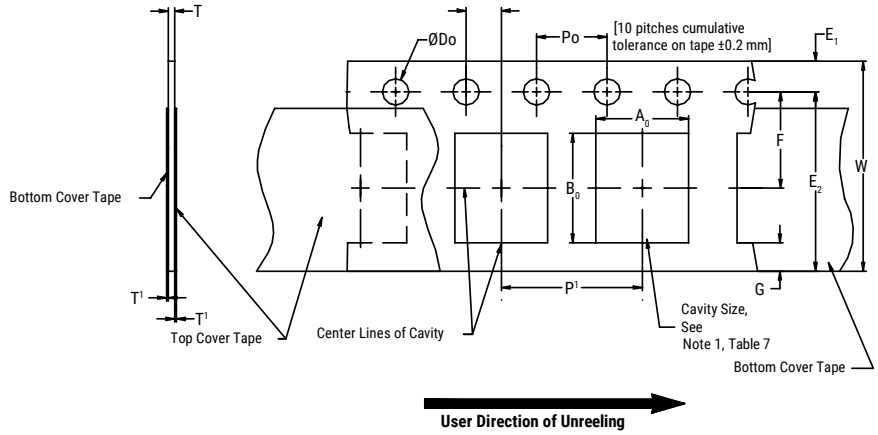

Table 7 – Punched (Paper) Carrier Tape Dimensions

Metric will govern

Constant Dimensions — Millimeters (Inches)							
Tape Size	D_0	E_1	P_0	P_2	T_1 Maximum	G Minimum	R Reference Note 2
8 mm	1.5 +0.10 -0.0 (0.059 +0.004 -0.0)	1.75 ±0.10 (0.069 ±0.004)	4.0 ±0.10 (0.157 ±0.004)	2.0 ±0.05 (0.079 ±0.002)	0.10 (0.004) Maximum	0.75 (0.030)	25 (0.984)

Variable Dimensions — Millimeters (Inches)							
Tape Size	Pitch	E2 Minimum	F	P_1	T Maximum	W Maximum	A_0 B_0
8 mm	Half (2 mm)	6.25 (0.246)	3.5 ±0.05 (0.138 ±0.002)	2.0 ±0.05 (0.079 ±0.002)	1.1 (0.098)	8.3 (0.327)	Note 1
8 mm	Single (4 mm)			4.0 ±0.10 (0.157 ±0.004)		8.3 (0.327)	

1. The cavity defined by A_0, B_0 and T shall surround the component with sufficient clearance that:
a) the component does not protrude beyond either surface of the carrier tape.
b) the component can be removed from the cavity in a vertical direction without mechanical restriction, after the top cover tape has been removed.
c) rotation of the component is limited to 20° maximum (see Figure 3).
d) lateral movement of the component is restricted to 0.5 mm maximum (see Figure 4).
e) see addendum in EIA Standard 481 for standards relating to more precise taping requirements.
2. The tape with or without components shall pass around R without damage (see Figure 6).

Packaging Information Performance Notes

1. Cover Tape Break Force: 1.0 kg minimum.
2. Cover Tape Peel Strength: The total peel strength of the cover tape from the carrier tape shall be:

Tape Width	Peel Strength
8 mm	0.1 to 1.0 Newton (10 to 100 gf)
12 and 16 mm	0.1 to 1.3 Newton (10 to 130 gf)

The direction of the pull shall be opposite the direction of the carrier tape travel. The pull angle of the carrier tape shall be 165° to 180° from the plane of the carrier tape. During peeling, the carrier and/or cover tape shall be pulled at a velocity of 300 ±10 mm/minute.
3. Labeling: Bar code labeling (standard or custom) shall be on the side of the reel opposite the sprocket holes. *Refer to EIA Standards 556 and 624*.

Figure 3 – Maximum Component Rotation

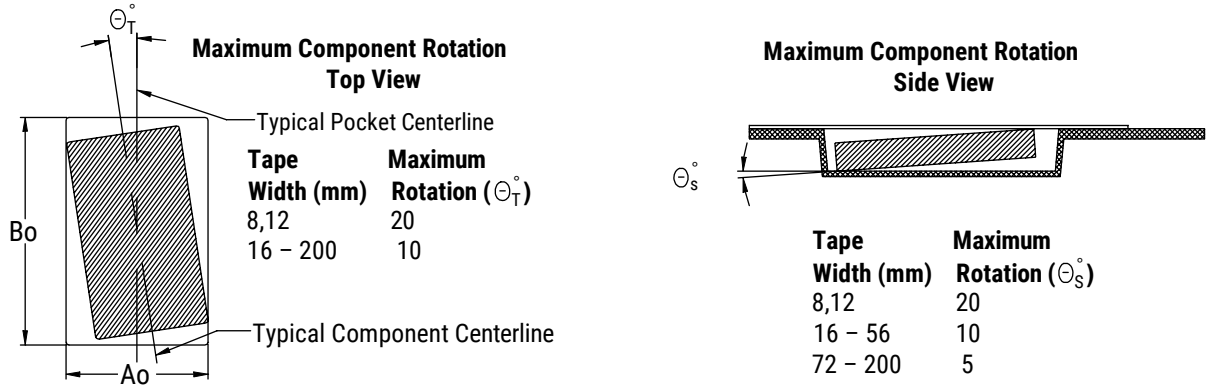

Figure 4 – Maximum Lateral Movement

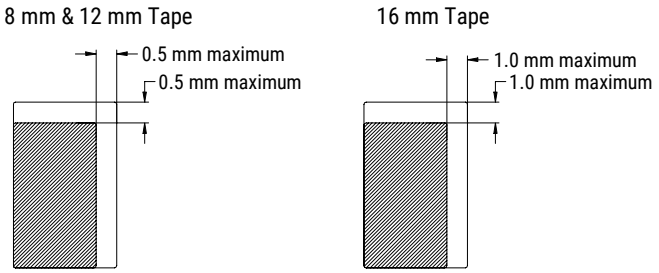

Figure 5 – Bending Radius

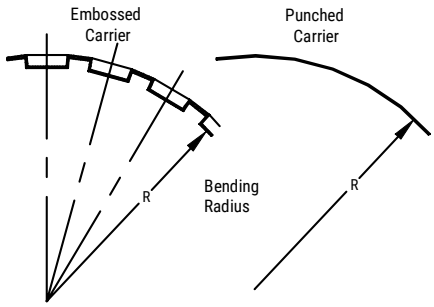

Figure 6 – Reel Dimensions

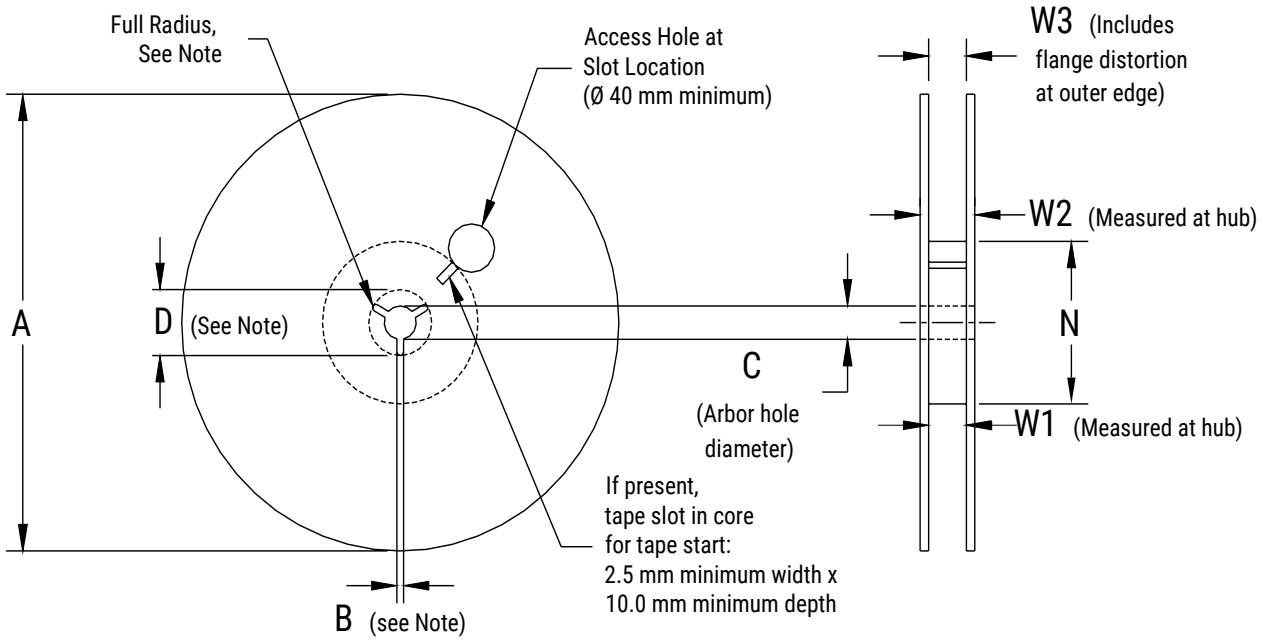

Note: Drive spokes optional; if used, dimensions B and D shall apply.

Table 8 – Reel Dimensions

Metric will govern

Constant Dimensions — Millimeters (Inches)				
Tape Size	A	B Minimum	C	D Minimum
8 mm	178 ±0.20 (7.008 ±0.008) or 330 ±0.20 (13.000 ±0.008)	1.5 (0.059)	13.0 +0.5/−0.2 (0.521 +0.02/−0.008)	20.2 (0.795)
12 mm				
16 mm				

Variable Dimensions — Millimeters (Inches)				
Tape Size	N Minimum	W_1	W_2 Maximum	W_3
8 mm	50 (1.969)	8.4 +1.5/−0.0 (0.331 +0.059/−0.0)	14.4 (0.567)	Shall accommodate tape width without interference
12 mm		12.4 +2.0/−0.0 (0.488 +0.078/−0.0)	18.4 (0.724)	
16 mm		16.4 +2.0/−0.0 (0.646 +0.078/−0.0)	22.4 (0.882)	

Figure 7 – Tape Leader & Trailer Dimensions

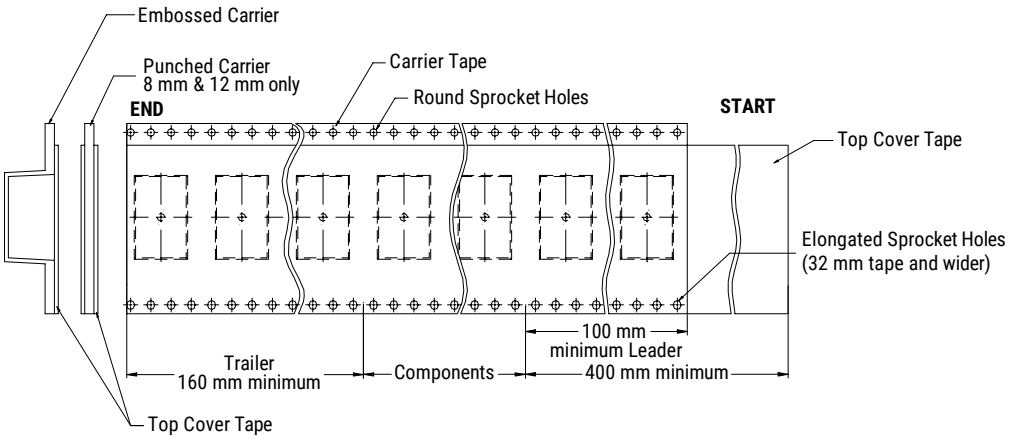

Figure 8 – Maximum Camber

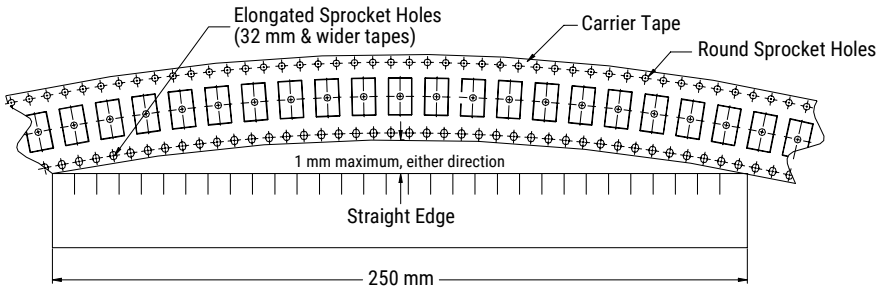

KEMET Electronics Corporation Sales Offices

For a complete list of our global sales offices, please visit www.kemet.com/sales.

Disclaimer

All product specifications, statements, information and data (collectively, the "Information") in this datasheet are subject to change. The customer is responsible for checking and verifying the extent to which the Information contained in this publication is applicable to an order at the time the order is placed.

All Information given herein is believed to be accurate and reliable, but it is presented without guarantee, warranty, or responsibility of any kind, expressed or implied.

Statements of suitability for certain applications are based on KEMET Electronics Corporation's ("KEMET") knowledge of typical operating conditions for such applications, but are not intended to constitute – and KEMET specifically disclaims – any warranty concerning suitability for a specific customer application or use. The Information is intended for use only by customers who have the requisite experience and capability to determine the correct products for their application. Any technical advice inferred from this Information or otherwise provided by KEMET with reference to the use of KEMET's products is given gratis, and KEMET assumes no obligation or liability for the advice given or results obtained.

Although KEMET designs and manufactures its products to the most stringent quality and safety standards, given the current state of the art, isolated component failures may still occur. Accordingly, customer applications which require a high degree of reliability or safety should employ suitable designs or other safeguards (such as installation of protective circuitry or redundancies) in order to ensure that the failure of an electrical component does not result in a risk of personal injury or property damage.

Although all product–related warnings, cautions and notes must be observed, the customer should not assume that all safety measures are indicted or that other measures may not be required.

KEMET is a registered trademark of KEMET Electronics Corporation.