PRODUCT CATALOG

HIROSE ELECTRIC CO., LTD.

CX Series

USB Type-C Connector

CX™ series

Wide Variation

Click Feeling

USB4

Product Page
https://www.hirose.com/en/product/series/CX

Special Features Page
https://www.hirose.com/en/product/pr/CX/

Jul. 2024

Dec.1.2024 Copyright 2024 HIROSE ELECTRIC CO., LTD. All Rights Reserved.

sales@prom-elec.com / ООО ПРОМЭЛЕКТРОНИКА

USB from Hirose Electric: Standard connections, inspired solutions.

Overview

The CX Series connectors conform to the next-generation USB standard USB Type-C®.
Its use as a standard interface is expected to spread to a wide variety of devices in the consumer, industrial machinery and automotive markets.
USB Type-C® is a registered trademark of USB Implementers Forum, Inc.

Features

1. USB Type-C compliant interface connector

- High speed transmission：20Gbps / USB4 Gen.2x2
  5Gbps / USB3.0
  480Mbps / USB2.0

- Supports 5A, 48V, 240W
  (Products supporting 6A are also available.)

2. Reversible plug orientation ensures easy insertion

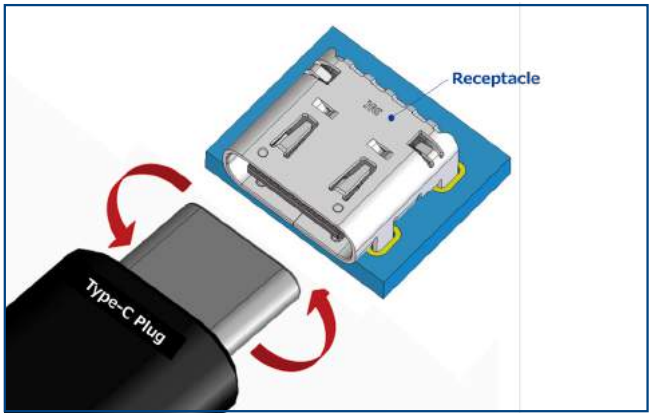

3. Clear Tactile Click (Excellent Lock Design)

The CX Series has a superior click feel when mating and is designed to prevent incomplete mating.

Dec.1.2024 Copyright 2024 HIROSE ELECTRIC CO., LTD. All Rights Reserved.

4. Wide Product Variation

Receptacle

- PCB Mounting Type
  - Mid-Mount
  - Top-Mount

- Mounting Methods
  - Right Angle Hybrid (SMT+THR*)
    *THR：Through Hole Reflow
  - Right Angle SMT (Double-row / Single-row)
  - Vertical SMT

- Water/Dust Resistant Type
  (IEC60529 Standard)
  - IP54, Test Conditions (Unmated)
    * Water Resistance :
      Spray 10L/min of water at 50-150Kpa
      for 10 minutes
    * Dust Resistance :
      Left the connector in a test chamber containing
      talcum powder with a density of 2 kg/m³
      and particle size less than 75 µm
  - IP68, Test Conditions (Unmated)
    * Water Resistance :
      Immersed in 1.5 meters water depth
      for 30 minutes
    * Dust Resistance :
      Left the connector in a test chamber containing
      2 kg/m³ talcum powder(particles less than 75 µm)
      under a maximum decompression of 2 kPa
      for 8 hours
  - IP69K, Test Conditions (Unmated)
    * Water Resistance :
      Spray 80°C water at 8-10Mpa for 30 seconds
      in each of 4 angles from 10-15cm
    * Dust Resistance :
      Left the connector in a test chamber containing
      2 kg/m³ talcum powder(particles less than 75 µm)
      under a maximum decompression of 2 kPa
      for 8 hours

- Available in a variety of options including
  space-saving, low profile and robust types

Receptacle Variations

Dec.1.2024 Copyright 2024 HIROSE ELECTRIC CO., LTD. All Rights Reserved.

Plug

- PCB Mounting Type
  - Top-Mount
- Plug Unit, Plug Shell
- Slim Type
- Screw Locking Types
  - Dual screw
  - Single screw

Plug Variations

5. Halogen-free

No chlorine or bromine exceeding the standard value is used in the connector.

* As defined by IEC 61249-2-21
Br : 900ppm max., Cl : 900ppm max.,
Br+Cl : 1500ppm max.

Dec.1.2024 Copyright 2024 HIROSE ELECTRIC CO., LTD. All Rights Reserved.

Product Specifications

Rated Current	5A	Power : 1.25A Max. (A1, A4, A9, A12, B1, B4, B5, B9, B12) Other : 0.25A	Operating Temperature (Note 1)	-40 to +105°C
	6A	Power : 1.5A Max. (A1, A4, A9, A12, B1, B4, B5, B9, B12) Other : 0.25A	Operating Humidity Range	95% RH Max. (No condensation)
Rated Voltage	48V AC/DC Max.		Storage Temperature (Note 2)	-10 to +60°C
			Storage Humidity Range (Note 2)	15 to 70% RH (No condensation)

Items	Specifications	Conditions
Contact Resistance	40mΩ Max. (Initial)	Measured at 100mA (DC or 1000Hz)
Withstanding Voltage	No insulation breakdown	100V AC for 1 min.
Mating Durability	Contact resistance : Increase by 10mΩ or less from the initial value.	10000 insertion / extraction cycles
Overall Insertion / Extraction Force	Insertion : 5-20N Extraction : 8-20N (Initial), 6-20N (After Testing)	Measured with applicable connector

Note 1：Includes the temperature rise due to current flow.
Note 2：The term "storage" refers to products stored for long period of time prior to mounting and use.
Operating Temperature and Humidity Range are applicable when non-powered after PCB mounting and when temporarily stored during transportation.
Note 3：Information contained in this catalog represents general requirements for this Series. Please refer to product specifications sheet for detail each of products.

Materials / Finish

Receptacle

Component	Materials	Color / Finish	Remarks
Insulator	Thermoplastic	Black	UL94V-0
Contact	Copper Alloy	Gold Plating	-
Ground Plate	Stainless Steel	-	-
Mid Plate	Stainless Steel	Nickel Plating	-
Shell	Stainless Steel	Nickel Plating	-

Plug

Component	Materials	Color / Finish	Remarks
Insulator	Thermoplastic	Black	UL94V-0
Contact	Copper Alloy	Gold Plating	-
Lock Spring	Stainless Steel	Nickel Plating	-
Ground Spring	Stainless Steel	Nickel Plating	-
Shell	Stainless Steel	Nickel Plating	-

Note：Information contained in this catalog represents general requirements for this Series. Please refer to product drawing for details on each of the products.

Dec.1.2024 Copyright 2024 HIROSE ELECTRIC CO., LTD. All Rights Reserved.

Product Number Structure

Refer to the chart below when determining the product specifications from the product number.
Please select from the product numbers listed in this catalog when placing orders.

Receptacle

CX	90	M	W	2	G	-	24	P	#
❶	❷	❸	❹	❺	❻		❼	❽	❾

Plug

CX	60	-	24	S	-	UNIT
❶	❷		❼	❽		❿

CX	60	-	SLDA
❶	❷		❼

CX	60	-	24	S	-	1000	C1	1
❶	❷		❼	❽		⓫	⓬	⓭

❶ Series Name	CX	CX Series
❷ Mounting Type	60 70 80, 81 90	Paddle Card (PCB Wire Soldering) Right Angle Hybrid (SMT+THR) *THR：Through Hole Reflow Vertical SMT Right Angle SMT
❸ PCB Mounting Type	B M	Top-Mount Mid-Mount
❹ Special Specification Ⅰ	Blank W WD	Standard Water/Dust Resistance Water/Dust Resistance with Drawn shell
❺ Serial No. Ⅰ	-	None or 1, 2, 3, …, 1A, 1B, …
❻ Special Specification Ⅱ	Blank G	Standard With Gasket
❼ No. of Pos.	-	16, 24
❽ Contact Type	P S	Male Contacts Female Contacts
❾ Serial No. Ⅱ	-	None or 1, 2, 3, …
❿ Plug Components	UNIT SLDA	Plug Unit Plug Shell
⓫ Cable Length	1000	1000mm
⓬ Cable Assembly Type	C CD CS	Type-C to Type-C, Standard (Non-Screw) Type-C to Type-C, Screw locking type (Dual screw) Type-C to Type-C, Screw locking type (Single screw)
⓭ Serial No. Ⅲ	-	None or 1, 2, 3, …

Dec.1.2024 Copyright 2024 HIROSE ELECTRIC CO., LTD. All Rights Reserved.

Product Variation

Water/Dust Resistant Receptacle

PCB Mounting Type	Mounting Method	Part No.	Product Image	No. of Pos.	Transmission Speed	Rated Current	IP Code (Note)	Gasket
Mid-Mount	Right Angle SMT Double-row	CX90MW9-24P		24pos.	20Gbps USB4 Gen.2x2	5A	IP54	With Gasket
		CX90MW9-24P1					IP68 & IP69K	
		CX90MWD2-24P			5Gbps			Without Gasket
		CX90MWD2G-24P						With Gasket
	Right Angle SMT & Screw Single-row	CX90MW6-16P		16pos.	480Mbps	6A		
	Right Angle SMT Single-row	CX90MW8-16P				5A	IP54	
		CX90MW8-16P1					IP68 & IP69K	
Top-Mount	Right Angle SMT Double-row	CX90BW1-24P		24pos.	20Gbps USB4 Gen.2x2		IP54	
		CX90BW1-24P1					IP68 & IP69K	
	Right Angle SMT Single-row	CX90BW-16P(001)		16pos.	480Mbps		IP54	
		CX90BW-16P1					IP68 & IP69K	

Note : Test Conditions (Unmated)

- IP54 : Water Resistance : Spray 10L/min of water at 50-150Kpa for 10 minutes
  Dust Resistance : Left the connector in a test chamber containing talcum powder with a density of 2 kg/m³ and particle size less than 75 μm
- IP68 : Water Resistance : Immersed in 1.5 meters water depth for 30 minutes
  Dust Resistance : Left the connector in a test chamber containing 2 kg/m³ talcum powder(particles less than 75 μm) under a maximum decompression of 2 kPa for 8 hours
- IP69K : Water Resistance : Spray 80°C water at 8-10Mpa for 30 seconds in each of 4 angles from 10-15cm
  Dust Resistance : Left the connector in a test chamber containing 2 kg/m³ talcum powder(particles less than 75 μm) under a maximum decompression of 2 kPa for 8 hours

Dec.1.2024 Copyright 2024 HIROSE ELECTRIC CO., LTD. All Rights Reserved.

Standard Receptacle

*THR：Through Hole Reflow

PCB Mounting Type	Mounting Method	Part No.	Product Image	No. of Pos.	Transmission Speed	Rated Current	Features
Mid-Mount	Right Angle Hybrid (SMT＋THR*)	CX70M-24P1		24pos.	5Gbps	5A	Space-Saving 8.35mm Depth TID No. 5,200,000,077
		CX70M-24P2					Space-Saving 7.95mm Depth
		CX70M1-24P			20Gbps USB4 Gen.2x2	6A	Space-Saving Shell Spring Design
	Right Angle SMT Double-row	CX90M3-24P				5A	Space-Saving Shell Spring Design
	Right Angle SMT Single-row	CX90M-16P		16pos.	480Mbps	6A	Space-Saving Round Shell Type
		CX90MF-16P					Space-Saving Flat Shell Type
Top-Mount	Vertical SMT	CX80B1-24P		24pos.	20Gbps USB4 Gen.2x2	5A	Low Profile TID No. 5,200,000,701
		CX80B2-24P					Low Profile Shell Spring Design TID No. 8295
	Right Angle SMT Double-row	CX90B1-24P					Robust Shell Through-Hole Height：0.6mm TID No. 5,200,000,499
		CX90B1B-24P					Robust Shell Through-Hole Height：1.2mm TID No. 4626
		CX90B2-24P					Shell Spring Design Shell Through-Hole Height：1.2mm TID No. 7365
		CX90B2-24P1					Shell Spring Design Shell Through-Hole Height：0.6mm
	Right Angle SMT Single-row	CX90B-16P		16pos.	480Mbps		Space-Saving Round Shell Type
		CX90B-16P1					Space-Saving Shell Spring Design Flat Shell Type TID No. 9312

Dec.1.2024 Copyright 2024 HIROSE ELECTRIC CO., LTD. All Rights Reserved.

Plug

Type	Style	Part No.	Product Image	No. of Pos.	Transmission Speed	Rated Current	Features
PCB Mounting	Vertical SMT	CX81B-24S		24pos.	20Gbps USB4 Gen.2x2	5A	Top-Mount With Lock Latch (Note)
		CX81B-24S1					Top-Mount Without Lock Latch (Note)
Plug Unit	Paddle Card SMT Double-row (PCB Wire Soldering)	CX60-24S-UNIT					Slim Type TID No. 5,200,000,291
Plug Shell	-	CX60-SLDA		-			Slim Type
Cable Assembly	-	CX60-24S-1000-C1		24pos.	20Gbps USB4 Gen.2x2	5A	Double-Ended, Cable Length：1m Slim Type TID No. 5648
		CX60-24S-1000-CD					Double-Ended, Cable Length：1m Screw Locking Type [Dual Screw]
		CX60-24S-1000-CS					Double-Ended, Cable Length：1m Screw Locking Type [Single Screw]

Note : The CX81B-24S and CX81B-24S1 have the same dimensions except with or without a lock latch.

Dec.1.2024 Copyright 2024 HIROSE ELECTRIC CO., LTD. All Rights Reserved.

Water/Dust Resistant Receptacle

Mid-Mount, Right Angle (SMT Double-row), 24pos., Supports 20Gbps & 5A, With Gasket

Unit : mm

Part No.	HRS No.	IP Code	Purchase Unit
CX90MW9-24P	CL 0480-1040-0-00	IP54	1400pcs per reel
CX90MW9-24P1	CL 0480-1041-0-00	IP68 & IP69K	

- IP54, Test Conditions (Unmated)
  * Water Resistance :
    Spray 10L/min of water at 50-150Kpa for 10 minutes
  * Dust Resistance :
    Left the connector in a test chamber containing talcum powder with a density of 2 kg/m³ and particle size less than 75 μm

- IP68, Test Conditions (Unmated)
  * Water Resistance :
    Immersed in 1.5 meter water depth for 30 minutes
  * Dust Resistance :
    Left the connector in a test chamber containing 2 kg/m³ talcum powder (particles less than 75 μm) under a maximum decompression of 2 kPa for 8 hours.

- IP69K, Test Conditions (Unmated)
  * Water Resistance :
    Spray 80°C water at 8-10Mpa for 30 seconds in each of 4 angles from 10-15cm
  * Dust Resistance :
    Left the connector in a test chamber containing 2 kg/m³ talcum powder (particles less than 75 μm) under a maximum decompression of 2 kPa for 8 hours.

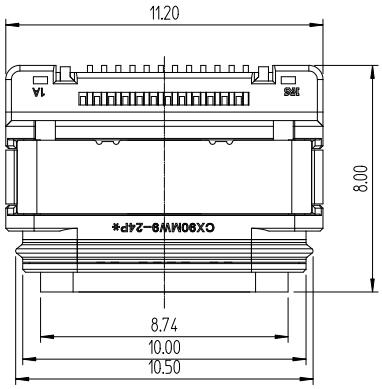

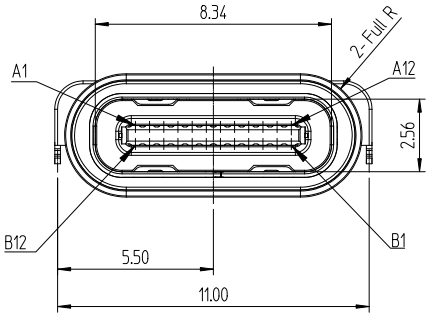

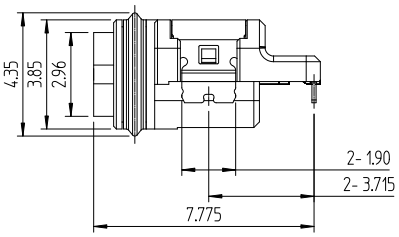

Recommended PCB Layout

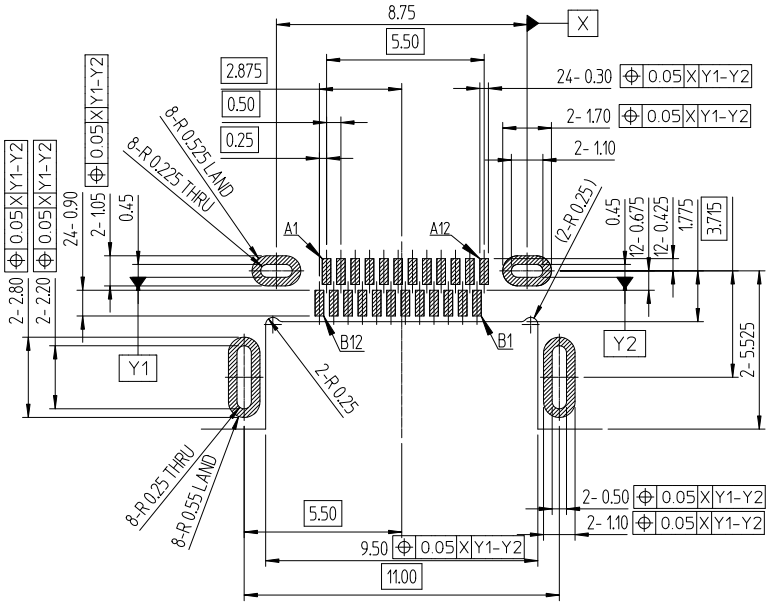

Dec.1.2024 Copyright 2024 HIROSE ELECTRIC CO., LTD. All Rights Reserved.

Mid-Mount, Right Angle (SMT Double-row), 24pos., Supports 5Gbps & 5A, Without Gasket

Unit : mm

Part No.	HRS No.	IP Code	Purchase Unit
CX90MWD2-24P	CL 0480-0609-0-00	IP68 & IP69K	1500pcs per reel

- IP68, Test Conditions (Unmated)
  * Water Resistance :
    Immersed in 1.5 meter water depth for 30 minutes
  * Dust Resistance :
    Left the connector in a test chamber containing 2 kg/m³ talcum powder (particles less than 75 μm) under a maximum decompression of 2 kPa for 8 hours.

- IP69K, Test Conditions (Unmated)
  * Water Resistance :
    Spray 80°C water at 8-10Mpa for 30 seconds in each of 4 angles from 10-15cm
  * Dust Resistance :
    Left the connector in a test chamber containing 2 kg/m³ talcum powder (particles less than 75 μm) under a maximum decompression of 2 kPa for 8 hours.

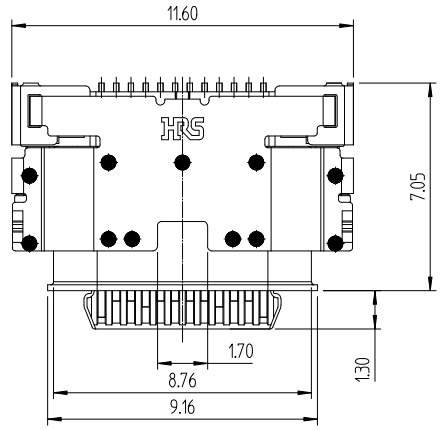

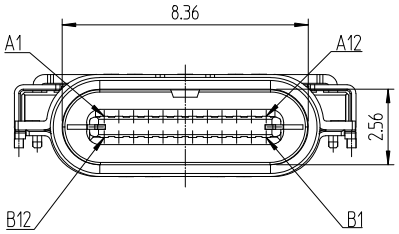

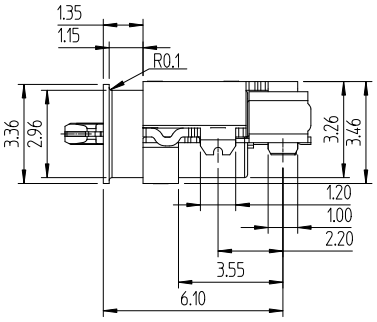

Recommended PCB Layout

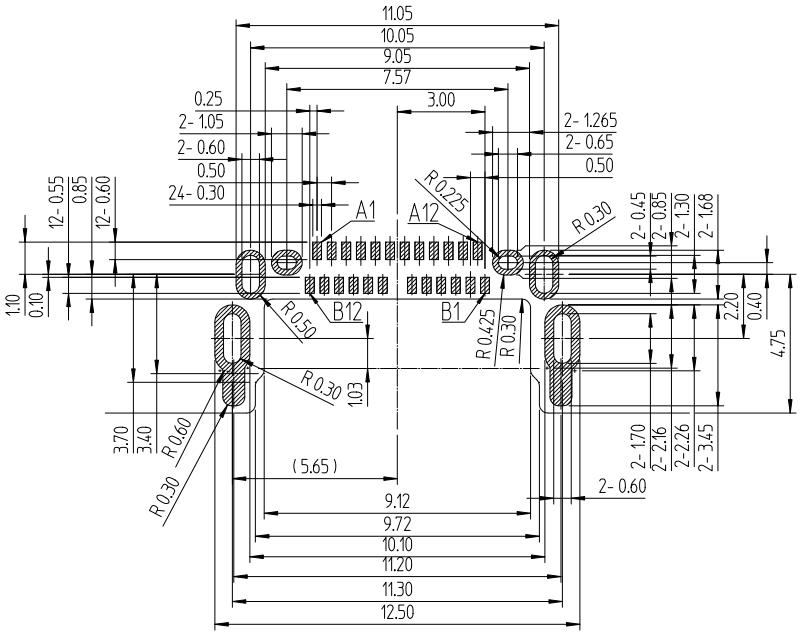

Dec.1.2024 Copyright 2024 HIROSE ELECTRIC CO., LTD. All Rights Reserved.

Mid-Mount, Right Angle (SMT Double-row), 24pos., Supports 5Gbps & 5A, With Gasket

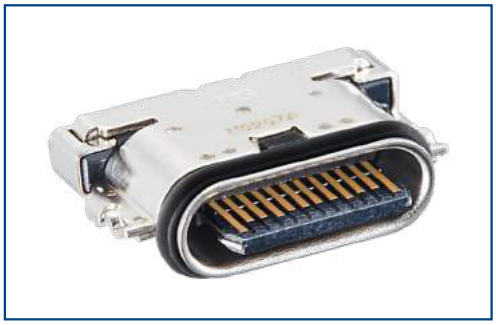

Unit : mm

Part No.	HRS No.	IP Code	Purchase Unit
CX90MWD2G-24P	CL 0480-0770-0-00	IP68 & IP69K	1500pcs per reel

- IP68, Test Conditions (Unmated)
  * Water Resistance :
    Immersed in 1.5 meter water depth for 30 minutes
  * Dust Resistance :
    Left the connector in a test chamber containing 2 kg/m³ talcum powder (particles less than 75 μm) under a maximum decompression of 2 kPa for 8 hours.

- IP69K, Test Conditions (Unmated)
  * Water Resistance :
    Spray 80°C water at 8-10Mpa for 30 seconds in each of 4 angles from 10-15cm
  * Dust Resistance :
    Left the connector in a test chamber containing 2 kg/m³ talcum powder (particles less than 75 μm) under a maximum decompression of 2 kPa for 8 hours.

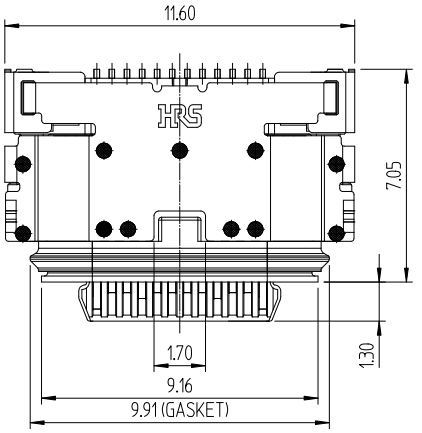

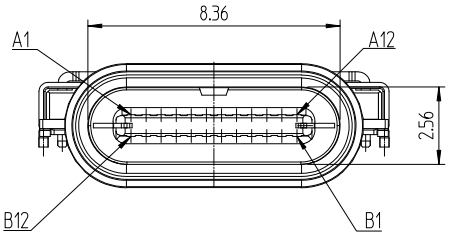

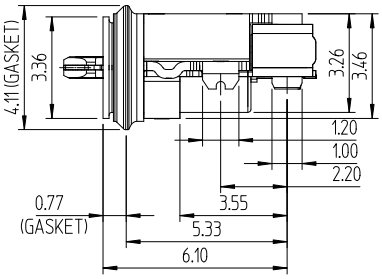

Recommended PCB Layout

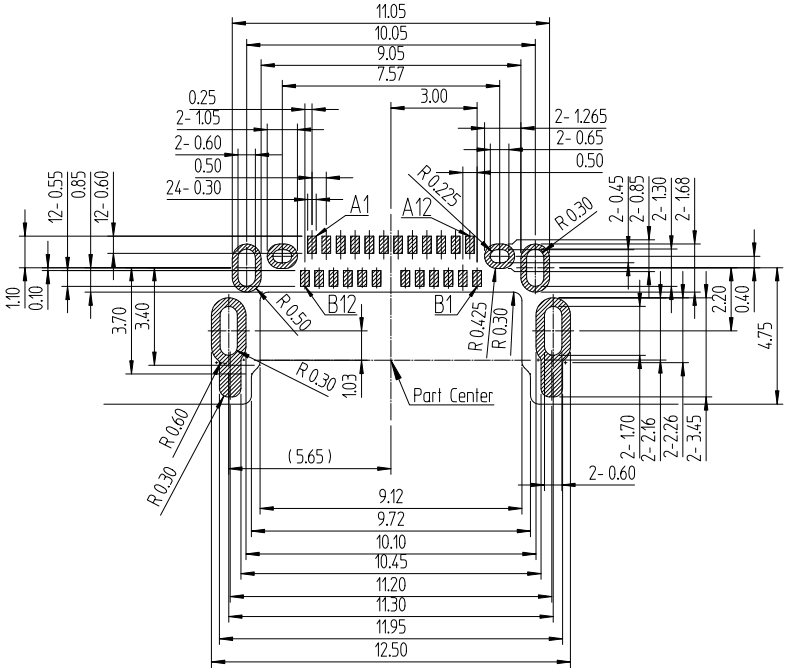

Dec.1.2024 Copyright 2024 HIROSE ELECTRIC CO., LTD. All Rights Reserved.

Mid-Mount, Right Angle (SMT Single-row), 16pos., Supports 480Mbps & 6A, With Gasket, Screw Mounting Design

Unit : mm

Part No.	HRS No.	IP Code	Purchase Unit
CX90MW6-16P	CL 0480-0857-0-00	IP68 & IP69K	1500pcs per reel

- IP68, Test Conditions (Unmated)
  * Water Resistance :
    Immersed in 1.5 meter water depth for 30 minutes
  * Dust Resistance :
    Left the connector in a test chamber containing 2 kg/m³ talcum powder (particles less than 75 μm) under a maximum decompression of 2 kPa for 8 hours.

- IP69K, Test Conditions (Unmated)
  * Water Resistance :
    Spray 80°C water at 8-10Mpa for 30 seconds in each of 4 angles from 10-15cm
  * Dust Resistance :
    Left the connector in a test chamber containing 2 kg/m³ talcum powder (particles less than 75 μm) under a maximum decompression of 2 kPa for 8 hours.

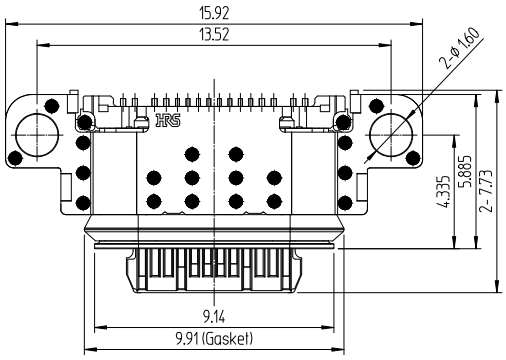

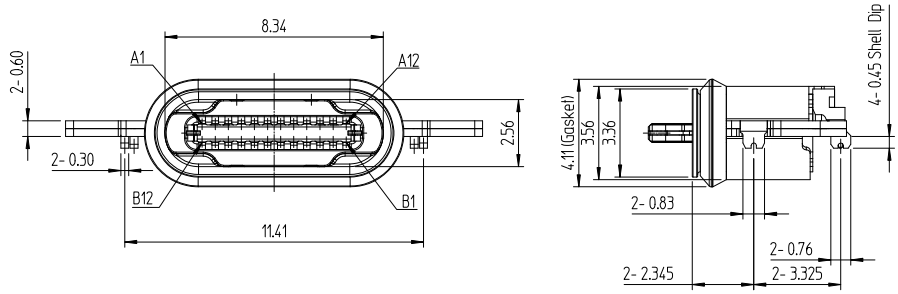

Recommended PCB Layout

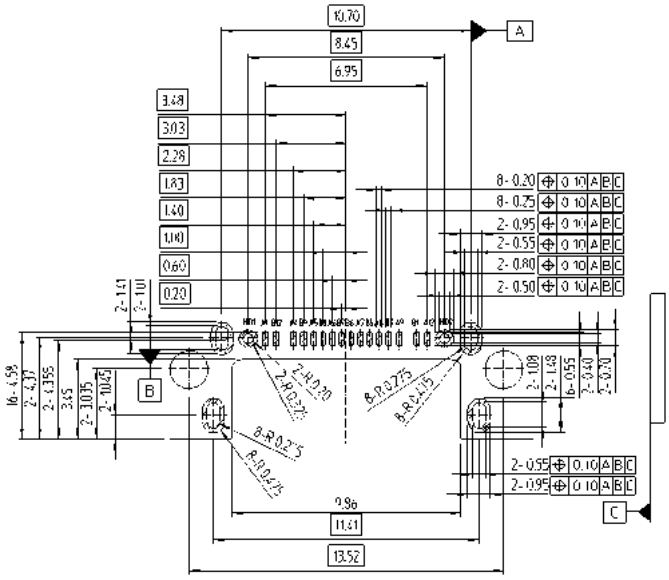

Dec.1.2024 Copyright 2024 HIROSE ELECTRIC CO., LTD. All Rights Reserved.

Mid-Mount, Right Angle (SMT Single-row), 16pos., Supports 480Mbps & 5A, With Gasket

Unit : mm

Part No.	HRS No.	IP Code	Purchase Unit
CX90MW8-16P	CL 0480-1036-0-00	IP54	1400pcs per reel
CX90MW8-16P1	CL 0480-1037-0-00	IP68 & IP69K	

- IP54, Test Conditions (Unmated)
  * Water Resistance :
    Spray 10L/min of water at 50-150Kpa for 10 minutes
  * Dust Resistance :
    Left the connector in a test chamber containing talcum powder with a density of 2 kg/m³ and particle size less than 75 μm

- IP68, Test Conditions (Unmated)
  * Water Resistance :
    Immersed in 1.5 meter water depth for 30 minutes
  * Dust Resistance :
    Left the connector in a test chamber containing 2 kg/m³ talcum powder (particles less than 75 μm) under a maximum decompression of 2 kPa for 8 hours.

- IP69K, Test Conditions (Unmated)
  * Water Resistance :
    Spray 80°C water at 8-10Mpa for 30 seconds in each of 4 angles from 10-15cm
  * Dust Resistance :
    Left the connector in a test chamber containing 2 kg/m³ talcum powder (particles less than 75 μm) under a maximum decompression of 2 kPa for 8 hours.

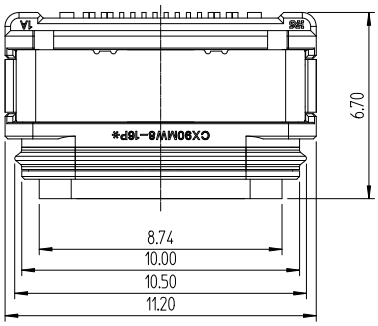

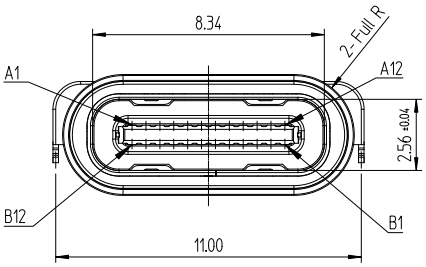

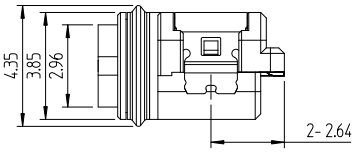

Recommended PCB Layout

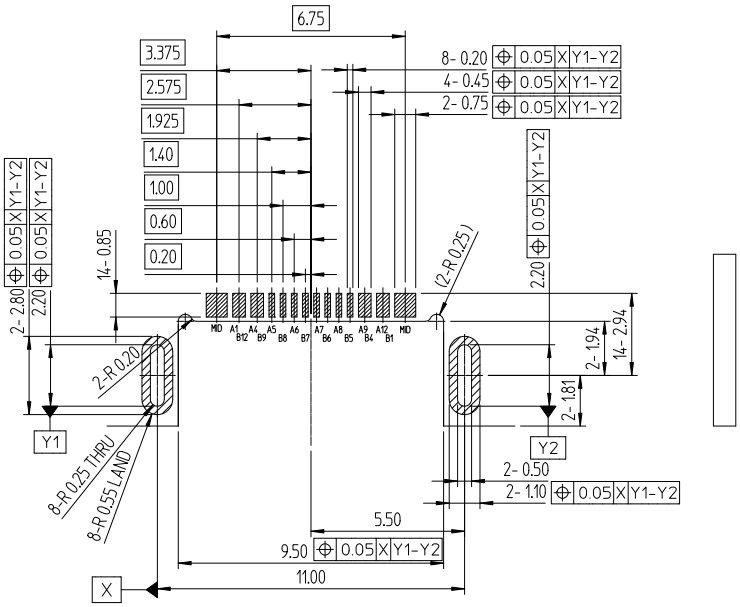

Dec.1.2024 Copyright 2024 HIROSE ELECTRIC CO., LTD. All Rights Reserved.

Top-Mount, Right Angle (SMT Double-row), 24pos., Supports 20Gbps & 5A, With Gasket

Unit : mm

Part No.	HRS No.	IP Code	Purchase Unit
CX90BW1-24P	CL 0480-1038-0-00	IP54	1400pcs per reel
CX90BW1-24P1	CL 0480-1039-0-00	IP68 & IP69K	

- IP54, Test Conditions (Unmated)
  * Water Resistance :
    Spray 10L/min of water at 50-150Kpa for 10 minutes
  * Dust Resistance :
    Left the connector in a test chamber containing talcum powder with a density of 2 kg/m³ and particle size less than 75 μm

- IP68, Test Conditions (Unmated)
  * Water Resistance :
    Immersed in 1.5 meter water depth for 30 minutes
  * Dust Resistance :
    Left the connector in a test chamber containing 2 kg/m³ talcum powder (particles less than 75 μm) under a maximum decompression of 2 kPa for 8 hours.

- IP69K, Test Conditions (Unmated)
  * Water Resistance :
    Spray 80°C water at 8-10Mpa for 30 seconds in each of 4 angles from 10-15cm
  * Dust Resistance :
    Left the connector in a test chamber containing 2 kg/m³ talcum powder (particles less than 75 μm) under a maximum decompression of 2 kPa for 8 hours.

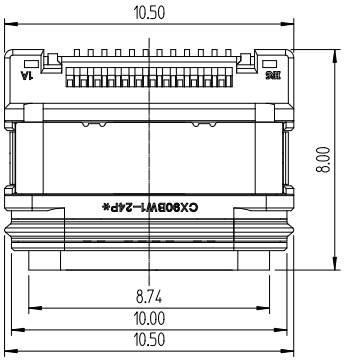

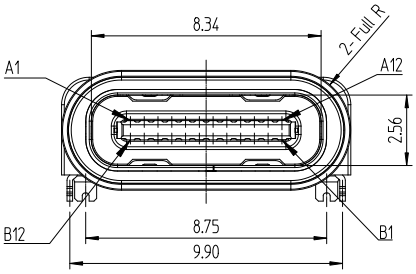

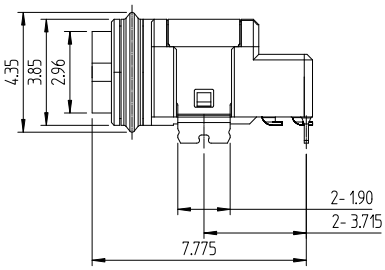

Recommended PCB Layout

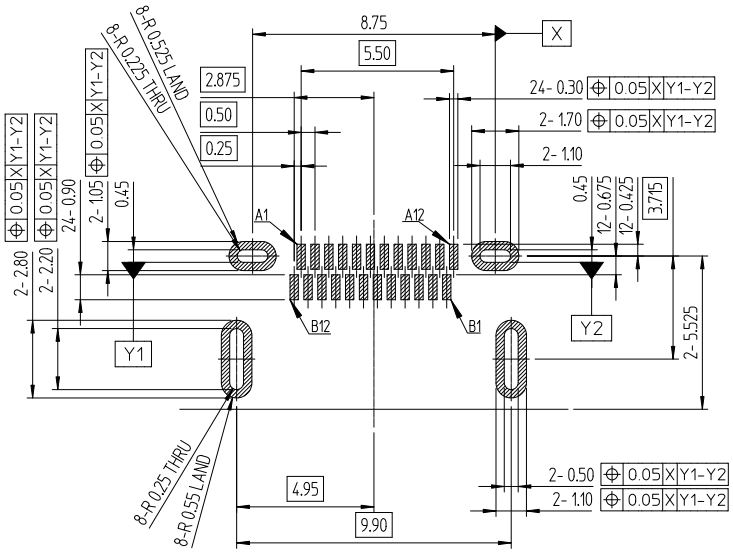

Dec.1.2024 Copyright 2024 HIROSE ELECTRIC CO., LTD. All Rights Reserved.

Top-Mount, Right Angle (SMT Single-row), 16pos., Supports 480Mbps & 5A, With Gasket

Unit : mm

Part No.	HRS No.	IP Code	Purchase Unit
CX90BW-16P(001)	CL 0480-1034-0-00	IP54	1400pcs per reel
CX90BW-16P1	CL 0480-1035-0-00	IP68 & IP69K	

- IP54, Test Conditions (Unmated)
  * Water Resistance :
    Spray 10L/min of water at 50-150Kpa for 10 minutes
  * Dust Resistance :
    Left the connector in a test chamber containing talcum powder with a density of 2 kg/m³ and particle size less than 75 μm

- IP68, Test Conditions (Unmated)
  * Water Resistance :
    Immersed in 1.5 meter water depth for 30 minutes
  * Dust Resistance :
    Left the connector in a test chamber containing 2 kg/m³ talcum powder (particles less than 75 μm) under a maximum decompression of 2 kPa for 8 hours.

- IP69K, Test Conditions (Unmated)
  * Water Resistance :
    Spray 80°C water at 8-10Mpa for 30 seconds in each of 4 angles from 10-15cm
  * Dust Resistance :
    Left the connector in a test chamber containing 2 kg/m³ talcum powder (particles less than 75 μm) under a maximum decompression of 2 kPa for 8 hours.

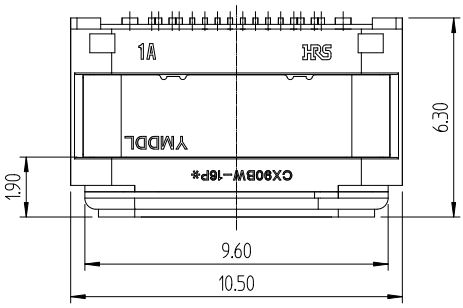

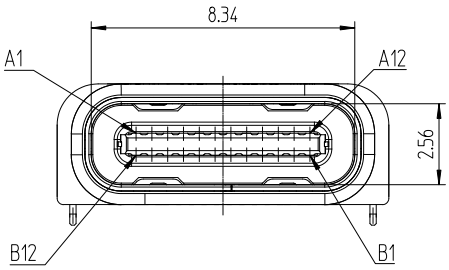

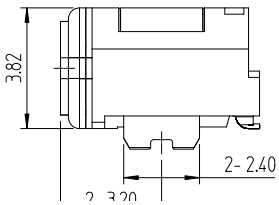

Recommended PCB Layout

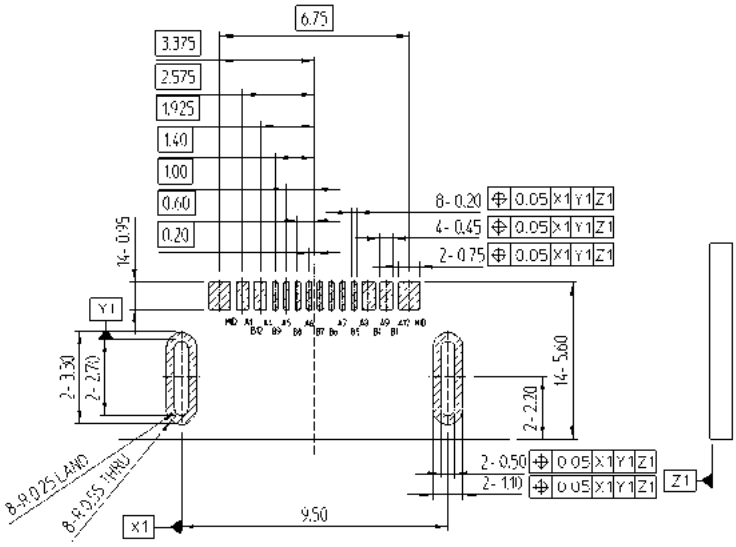

Dec.1.2024 Copyright 2024 HIROSE ELECTRIC CO., LTD. All Rights Reserved.

Standard Receptacle

Mid-Mount, Right Angle Hybrid (SMT+THR*), 24pos., Supports 5Gbps & 5A, 8.35mm Depth

Unit : mm

Part No.	HRS No.	Purchase Unit
CX70M-24P1	CL 0480-0304-0-00	1500pcs per reel

- TID No. 5,200,000,077
  * THR : Through Hole Reflow

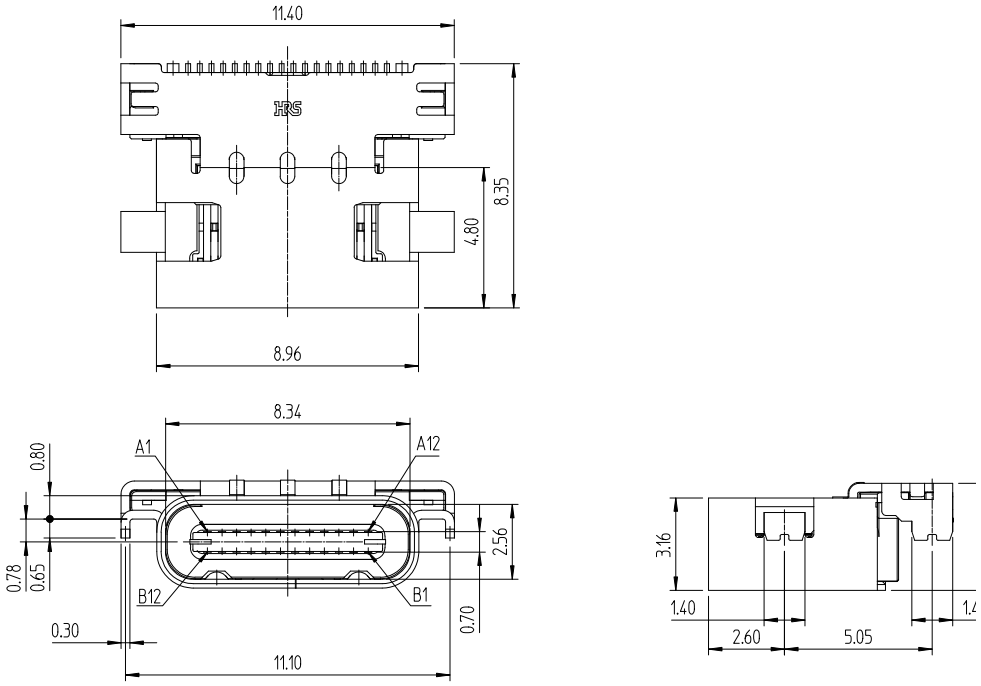

Recommended PCB Layout

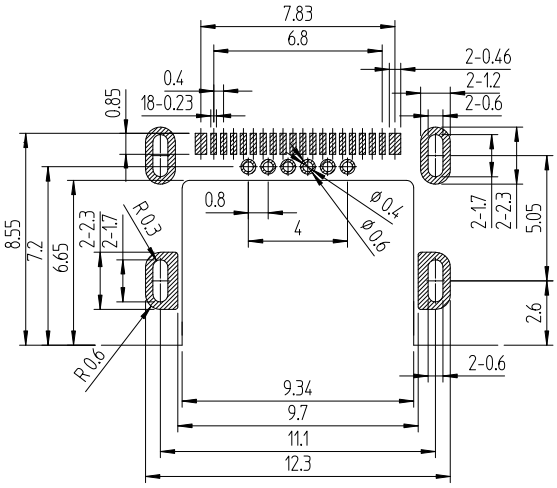

Dec.1.2024 Copyright 2024 HIROSE ELECTRIC CO., LTD. All Rights Reserved.

Mid-Mount, Right Angle Hybrid (SMT+THR*), 24pos., Supports 5Gbps & 5A, 7.95mm Depth

Unit : mm

Part No.	HRS No.	Purchase Unit
CX70M-24P2	CL 0480-0329-0-00	1500pcs per reel

* THR : Through Hole Reflow

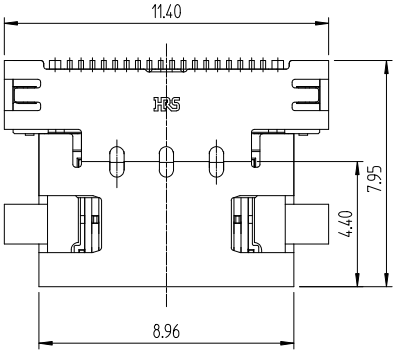

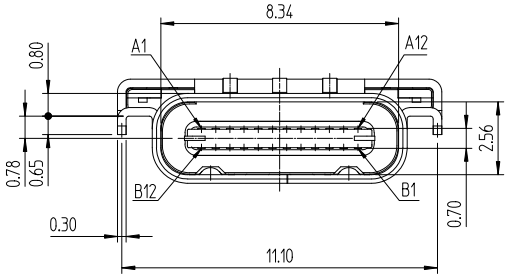

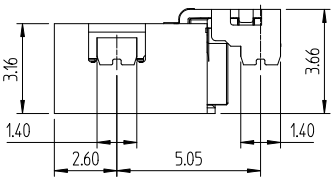

Recommended PCB Layout

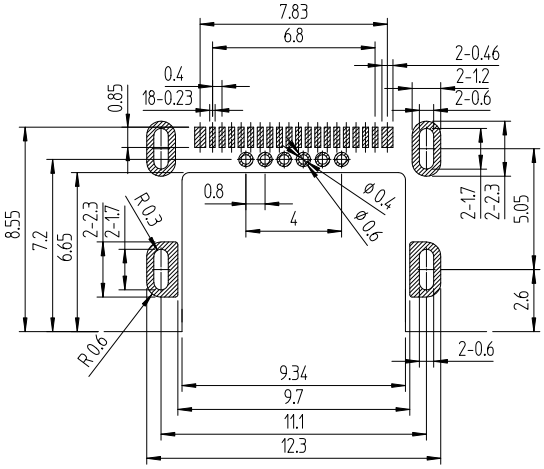

Dec.1.2024 Copyright 2024 HIROSE ELECTRIC CO., LTD. All Rights Reserved.

Mid-Mount, Right Angle Hybrid (SMT+THR*), 24pos., Supports 20Gbps & 6A, Shell Spring Design

Unit : mm

Part No.	HRS No.	Purchase Unit
CX70M1-24P	CL 0480-0691-0-00	1400pcs per reel

* THR : Through Hole Reflow

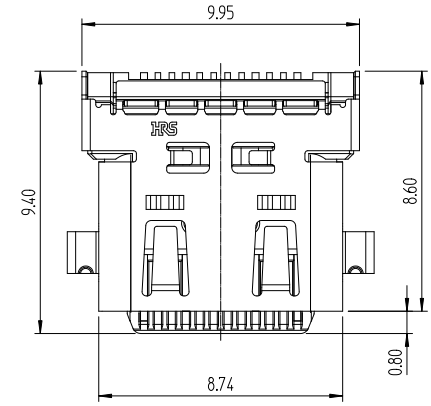

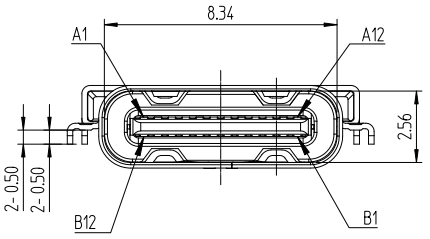

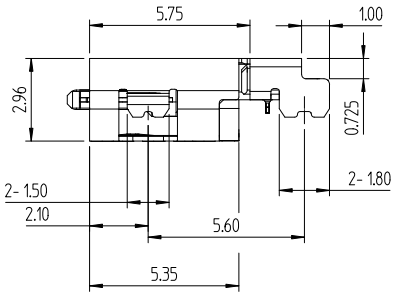

Recommended PCB Layout

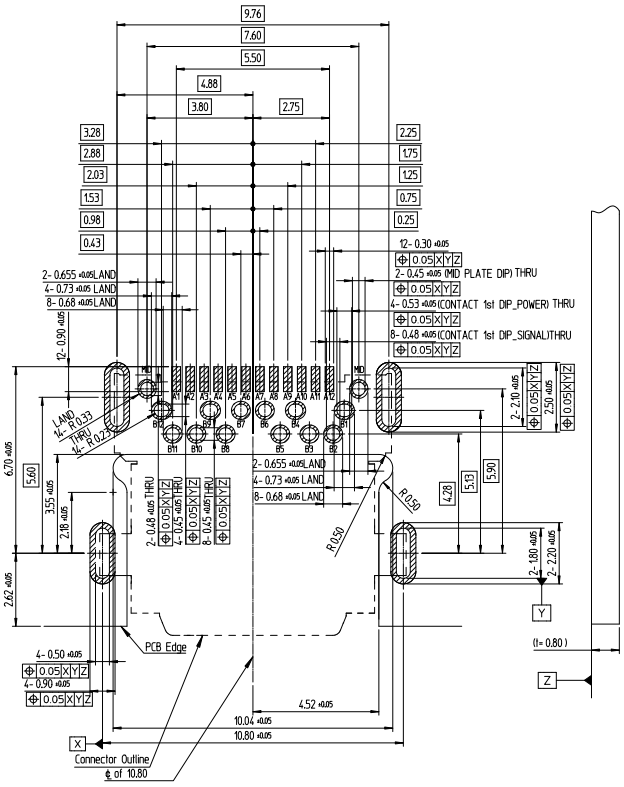

Dec.1.2024 Copyright 2024 HIROSE ELECTRIC CO., LTD. All Rights Reserved.

Mid-Mount, Right Angle (SMT Double-row), 24pos., Supports 20Gbps & 5A , Shell Spring Design

Unit : mm

Part No.	HRS No.	Purchase Unit
CX90M3-24P	CL 0480-0919-0-00	1500pcs per reel

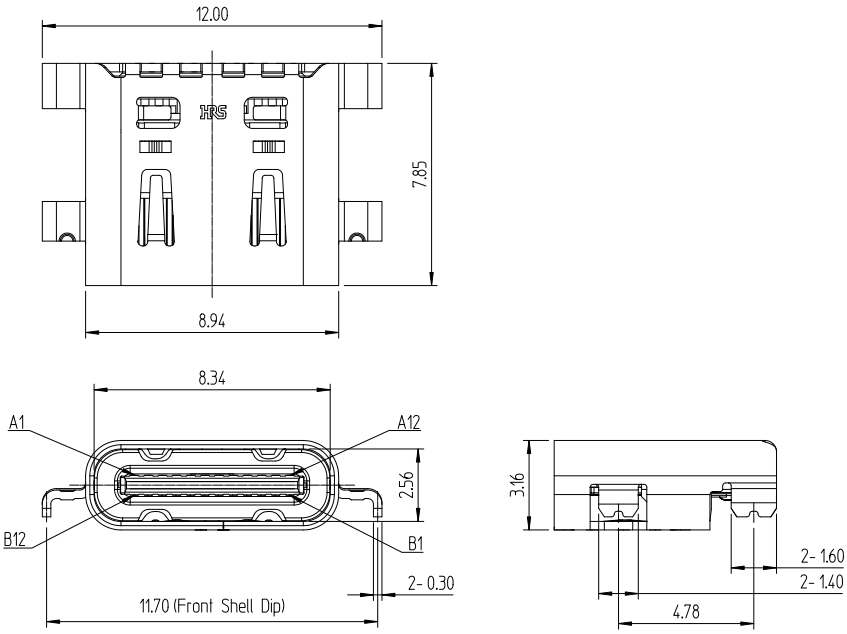

Recommended PCB Layout

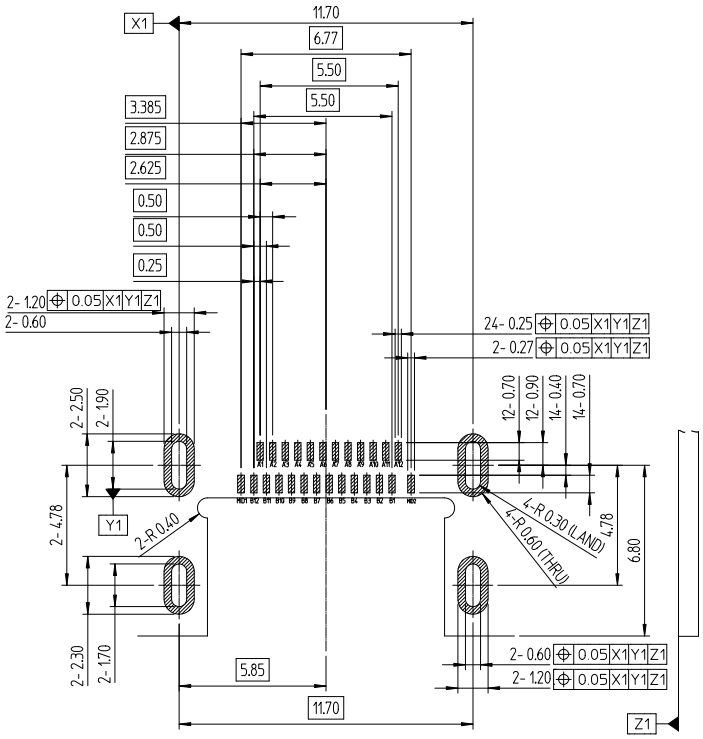

Dec.1.2024 Copyright 2024 HIROSE ELECTRIC CO., LTD. All Rights Reserved.

Mid-Mount, Right Angle (SMT Single-row), 16pos., Supports 480Mbps & 6A, Round Shell Type

Unit : mm

Part No.	HRS No.	Purchase Unit
CX90M-16P	CL 0480-0513-0-00	1600pcs per reel

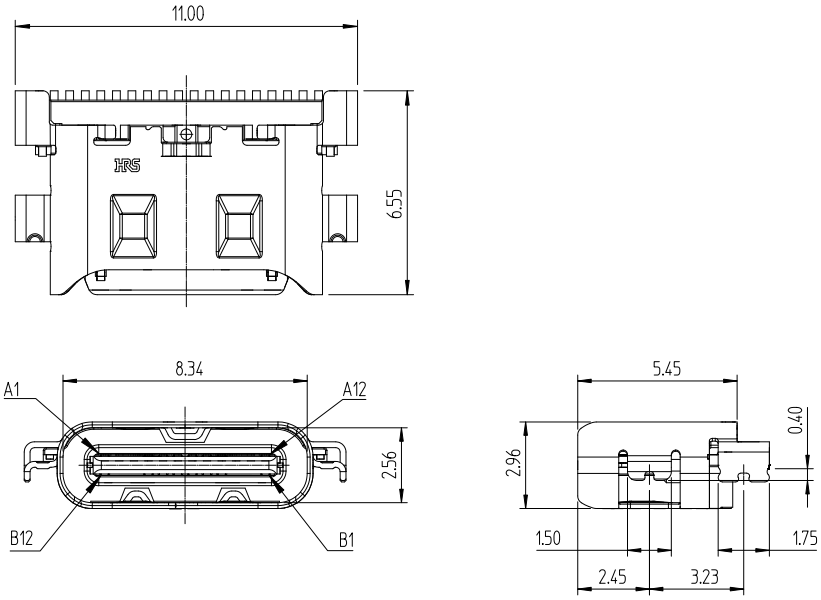

Recommended PCB Layout

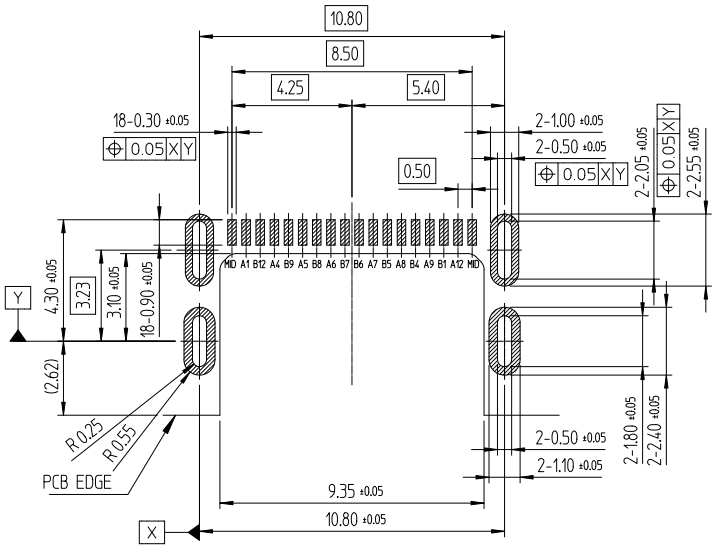

Dec.1.2024 Copyright 2024 HIROSE ELECTRIC CO., LTD. All Rights Reserved.

Mid-Mount, Right Angle (SMT Single-row), 16pos., Supports 480Mbps & 6A, Flat Shell Type

Unit : mm

Part No.	HRS No.	Purchase Unit
CX90MF-16P	CL 0480-0985-0-00	1600pcs per reel

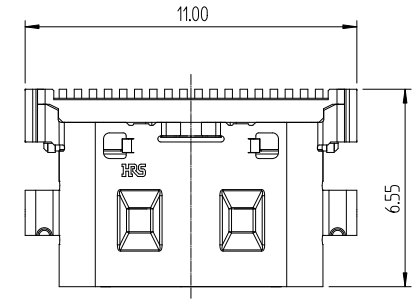

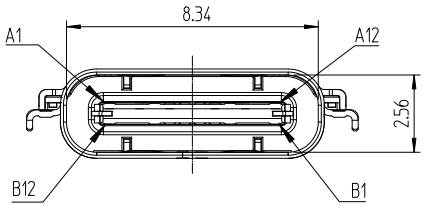

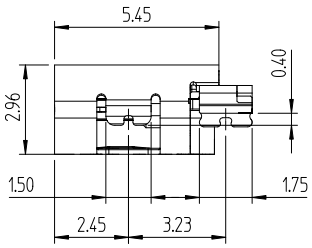

Recommended PCB Layout

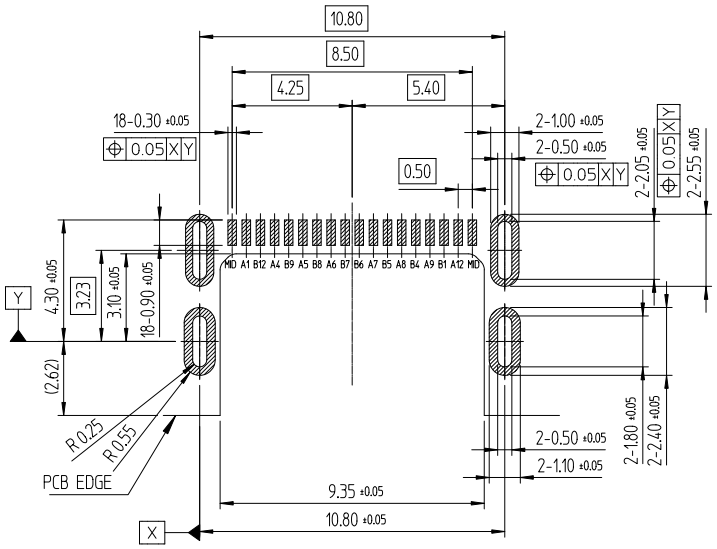

Dec.1.2024 Copyright 2024 HIROSE ELECTRIC CO., LTD. All Rights Reserved.

Top-Mount, Vertical (SMT), 24pos., Supports 20Gbps & 5A

Unit : mm

Part No.	HRS No.	Purchase Unit
CX80B1-24P	CL 0480-0625-0-00	600pcs per reel

- TID No. 5,200,000,701

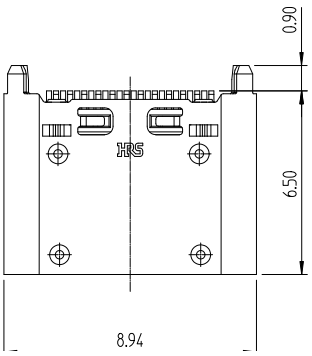

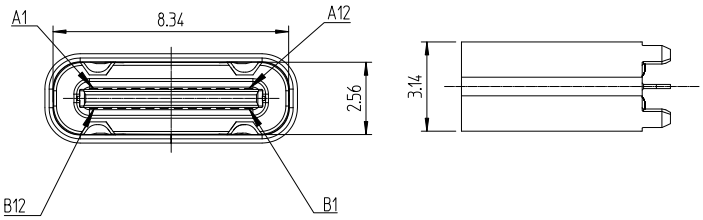

Recommended PCB Layout

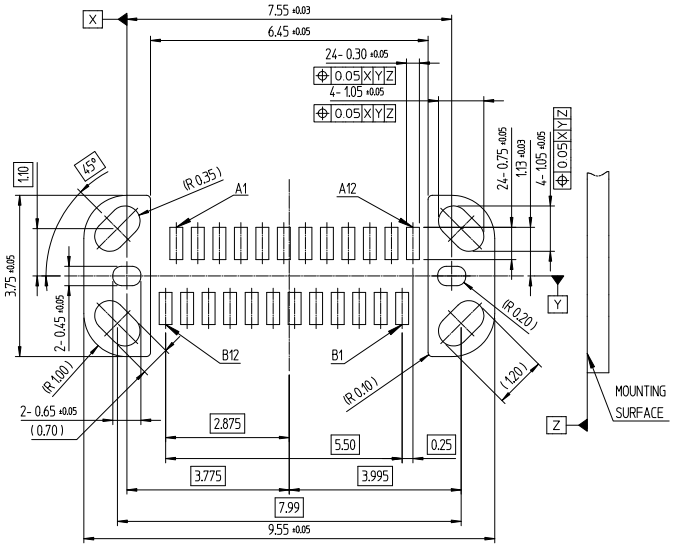

Dec.1.2024 Copyright 2024 HIROSE ELECTRIC CO., LTD. All Rights Reserved.

Top-Mount, Vertical (SMT), 24pos., Supports 20Gbps & 5A, Shell Spring Design

Unit : mm

Part No.	HRS No.	Purchase Unit
CX80B2-24P	CL 0480-0897-0-00	600pcs per reel

- TID No. 8295

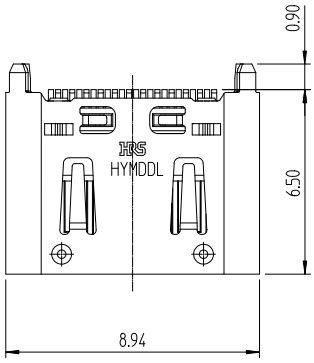

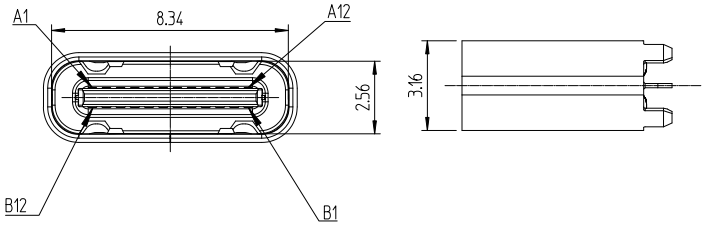

Recommended PCB Layout

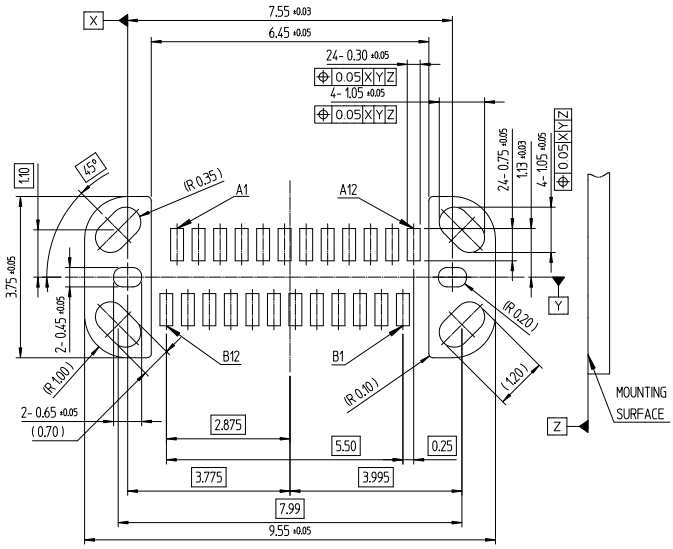

Dec.1.2024 Copyright 2024 HIROSE ELECTRIC CO., LTD. All Rights Reserved.

Top-Mount, Right Angle (SMT Double-row), 24pos., Supports 20Gbps & 5A, Shell Through-Hole Height：0.6mm

Unit : mm

Part No.	HRS No.	Purchase Unit
CX90B1-24P	CL 0480-0497-0-00	1500pcs per reel

- TID No. 5,200,000,499

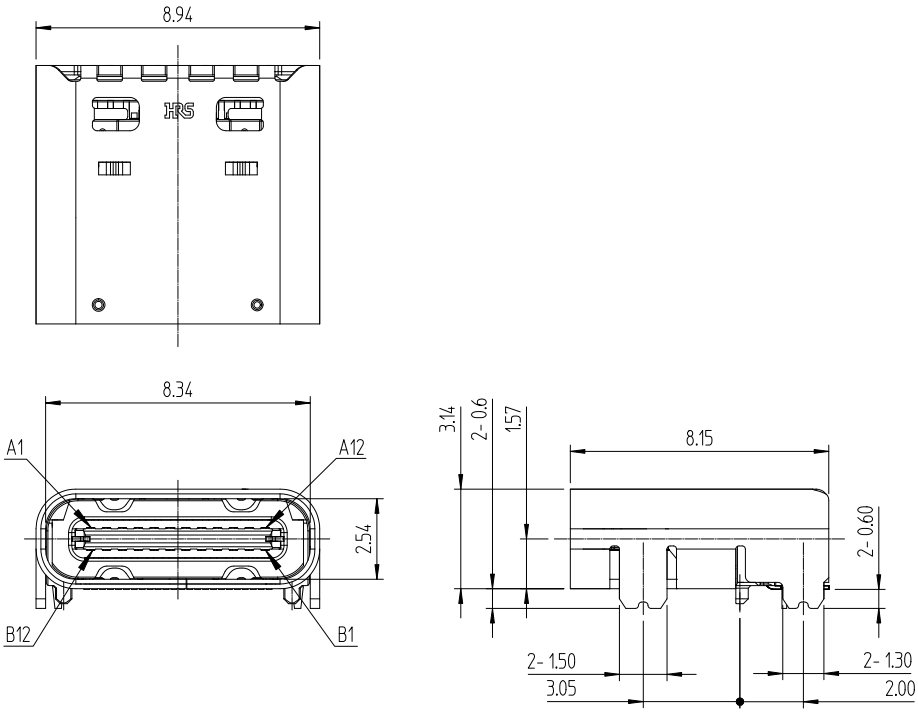

Recommended PCB Layout

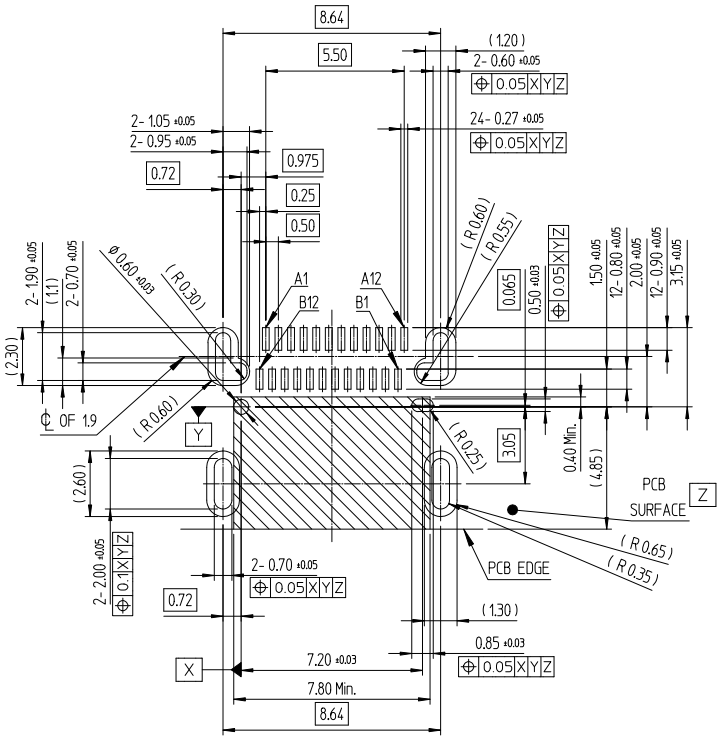

Dec.1.2024 Copyright 2024 HIROSE ELECTRIC CO., LTD. All Rights Reserved.

Top-Mount, Right Angle (SMT Double-row), 24pos., Supports 20Gbps & 5A, Shell Through-Hole Height：1.2mm

Unit : mm

Part No.	HRS No.	Purchase Unit
CX90B1B-24P	CL 0480-0809-0-00	1500pcs per reel

- TID No. 4626

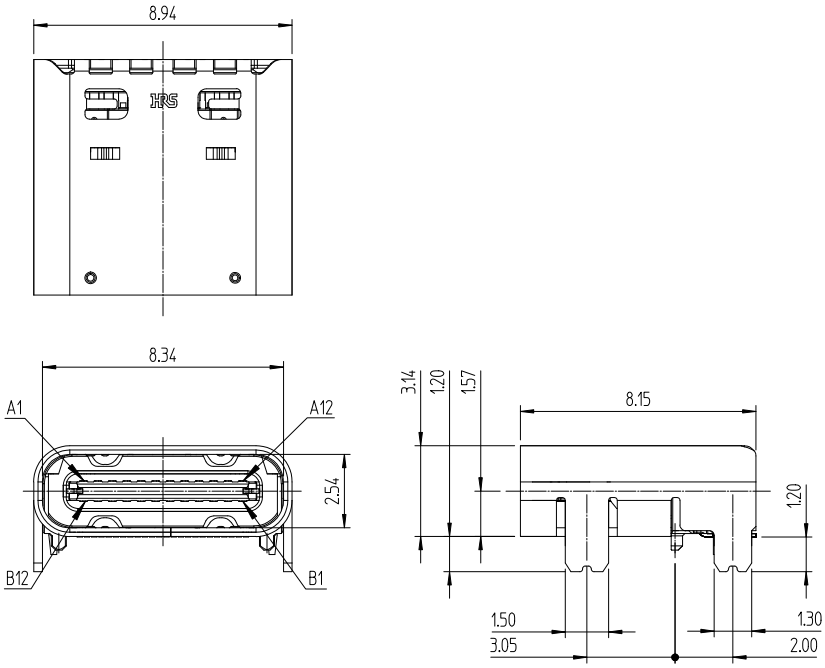

Recommended PCB Layout

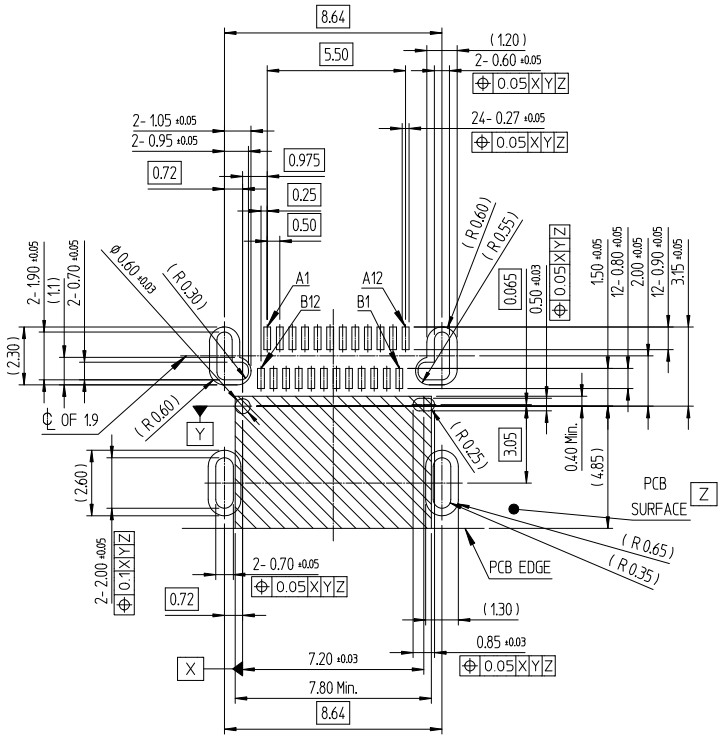

Dec.1.2024 Copyright 2024 HIROSE ELECTRIC CO., LTD. All Rights Reserved.

Top-Mount, Right Angle (SMT Double-row), 24pos., Supports 20Gbps & 5A, Shell Through-Hole Height：1.2mm, Shell Spring Design

Unit : mm

Part No.	HRS No.	Purchase Unit
CX90B2-24P	CL 0480-0889-0-00	1500pcs per reel

- TID No. 7365

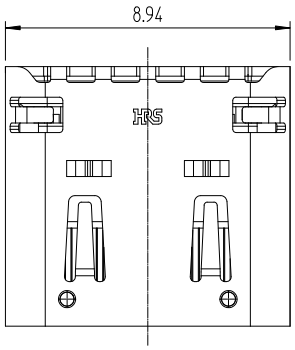

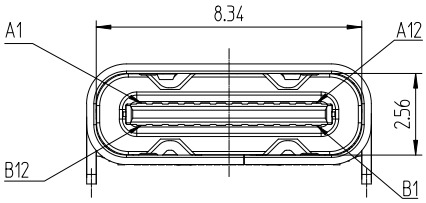

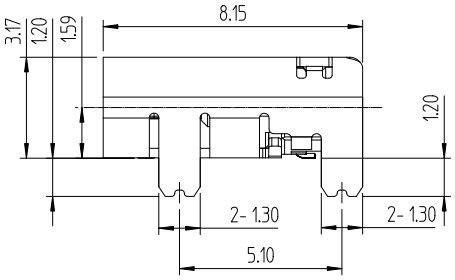

Recommended PCB Layout

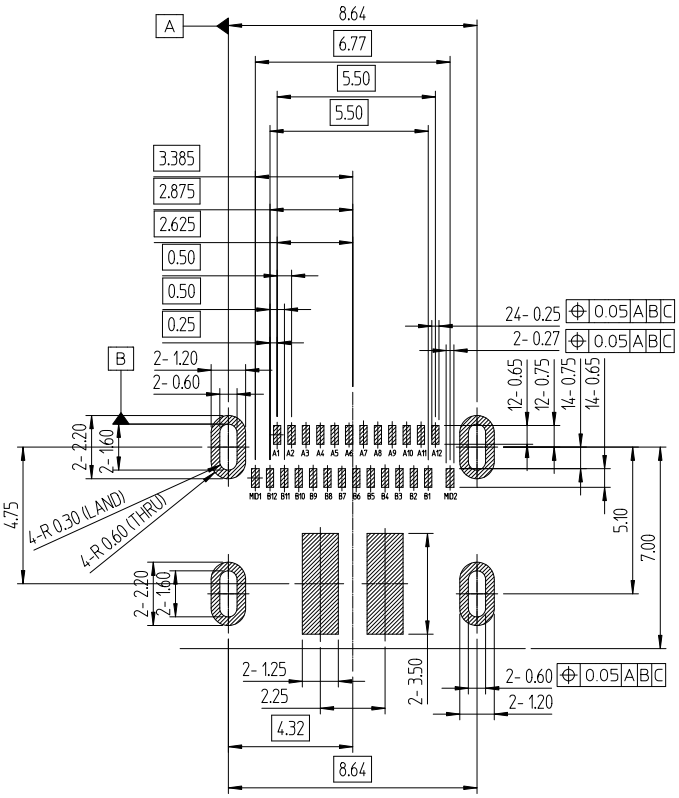

Dec.1.2024 Copyright 2024 HIROSE ELECTRIC CO., LTD. All Rights Reserved.

Top-Mount, Right Angle (SMT Double-row), 24pos., Supports 20Gbps & 5A, Shell Through-Hole Height：0.6mm, Shell Spring Design

Unit : mm

Part No.	HRS No.	Purchase Unit
CX90B2-24P1	CL 0480-1058-0-00	1500pcs per reel

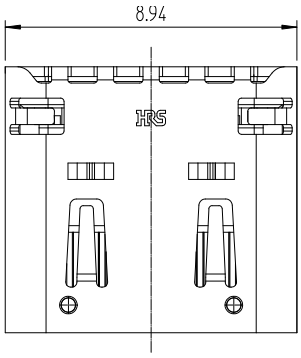

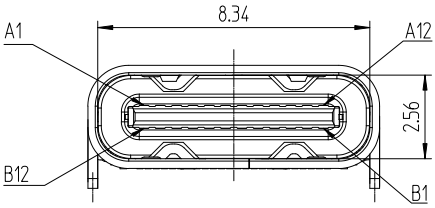

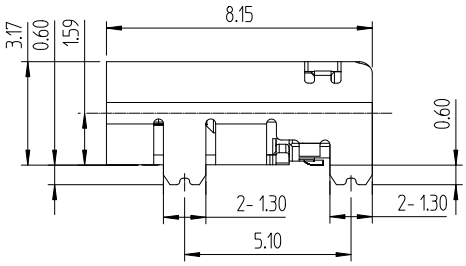

Recommended PCB Layout

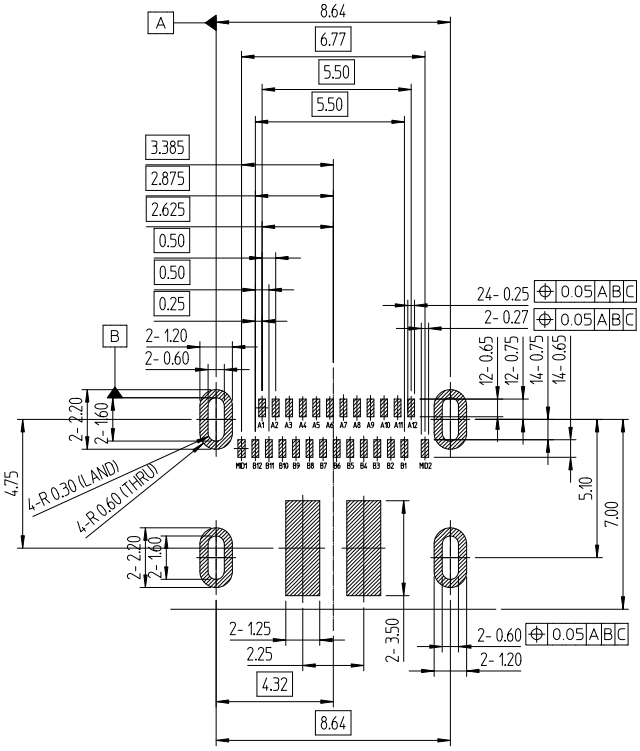

Dec.1.2024 Copyright 2024 HIROSE ELECTRIC CO., LTD. All Rights Reserved.

Top-Mount, Right Angle (SMT Single-row), 16pos., Supports 480Mbps & 5A , Round Shell Type

Unit : mm

Part No.	HRS No.	Purchase Unit
CX90B-16P	CL 0480-0755-0-00	1500pcs per reel

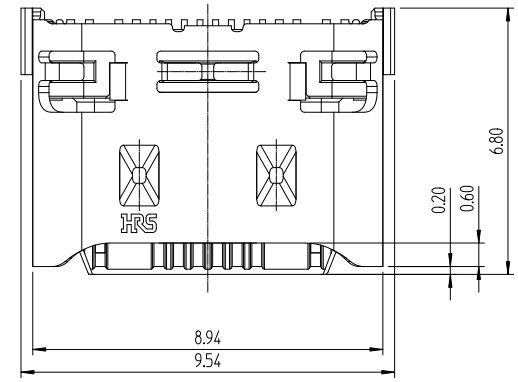

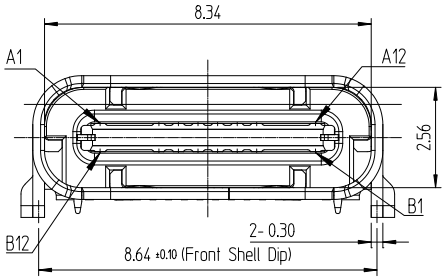

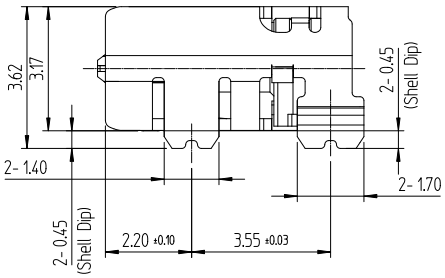

Recommended PCB Layout

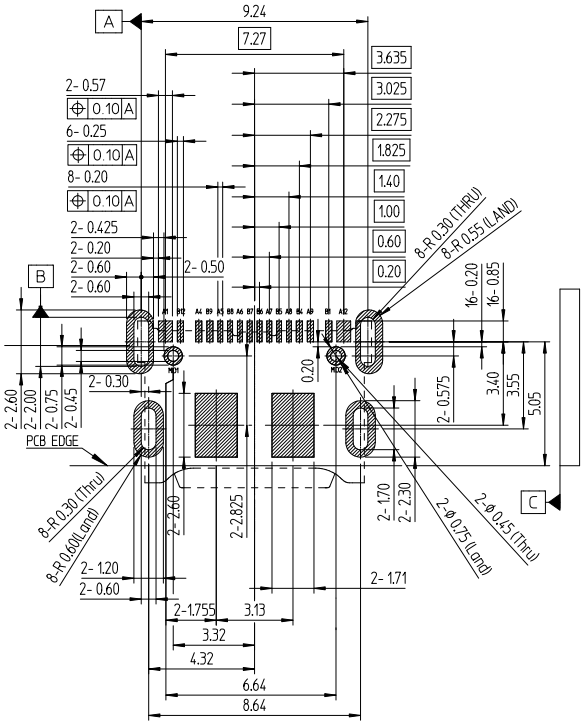

Dec.1.2024 Copyright 2024 HIROSE ELECTRIC CO., LTD. All Rights Reserved.

Top-Mount, Right Angle (SMT Single-row), 16pos., Supports 480Mbps & 5A, Shell Spring Design, Flat Shell Type

Unit : mm

Part No.	HRS No.	Purchase Unit
CX90B-16P1	CL 0480-0986-0-00	1500pcs per reel

- TID No. 9312

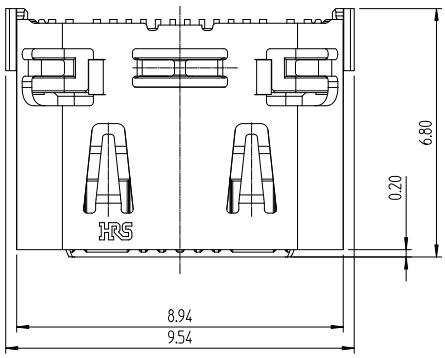

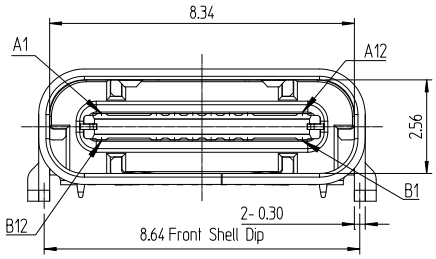

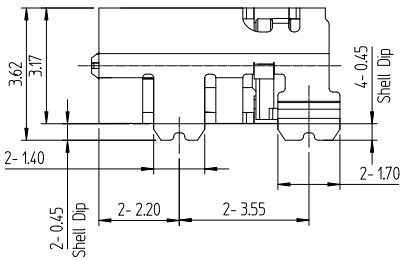

Recommended PCB Layout

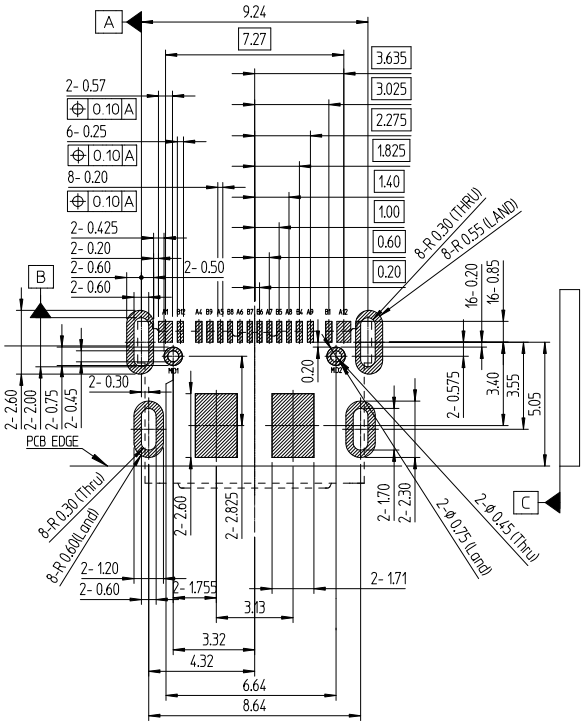

Dec.1.2024 Copyright 2024 HIROSE ELECTRIC CO., LTD. All Rights Reserved.

Plug

Top-Mount, Vertical (SMT), 24pos., Supports 20Gbps & 5A, With Lock Latch

Unit : mm

Part No.	HRS No.	Remarks	Purchase Unit
CX81B-24S	CL 0480-1044-0-00	With Lock Latch	400pcs per reel

- PCB Mounting Type
- The CX81B-24S and CX81B-24S1 have the same dimensions except with or without a lock latch.

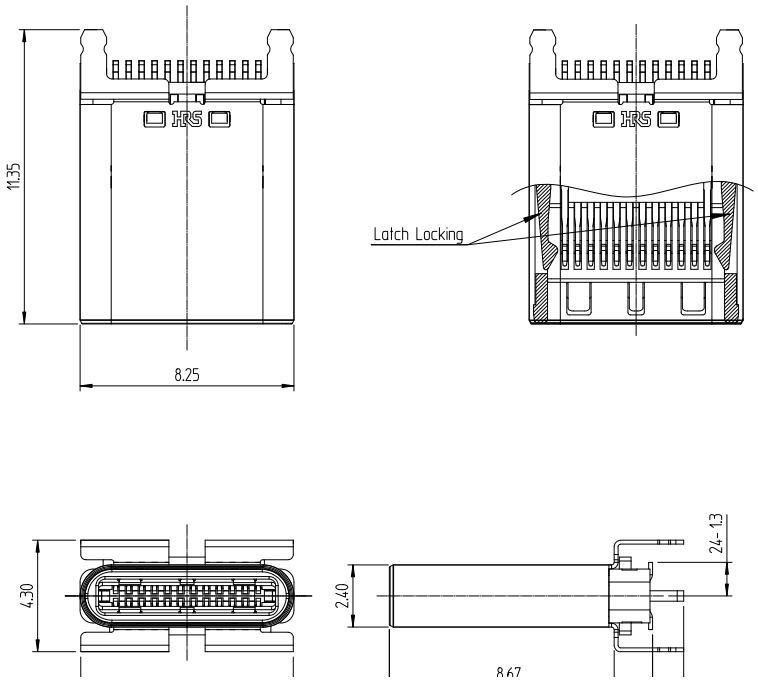

Recommended PCB Layout

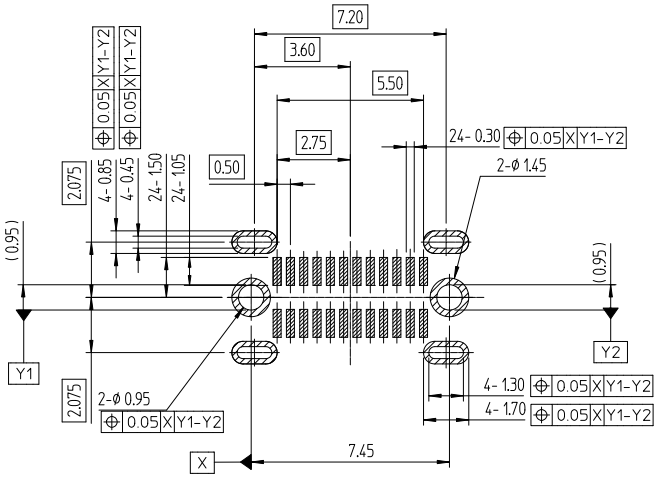

Dec.1.2024 Copyright 2024 HIROSE ELECTRIC CO., LTD. All Rights Reserved.

Top-Mount, Vertical (SMT), 24pos., Supports 20Gbps & 5A, Without Lock Latch

Unit : mm

Part No.	HRS No.	Remarks	Purchase Unit
CX81B-24S1	CL 0480-1110-0-00	Without Lock Latch	400pcs per reel

- PCB Mounting Type
- The CX81B-24S and CX81B-24S1 have the same dimensions except with or without a lock latch.

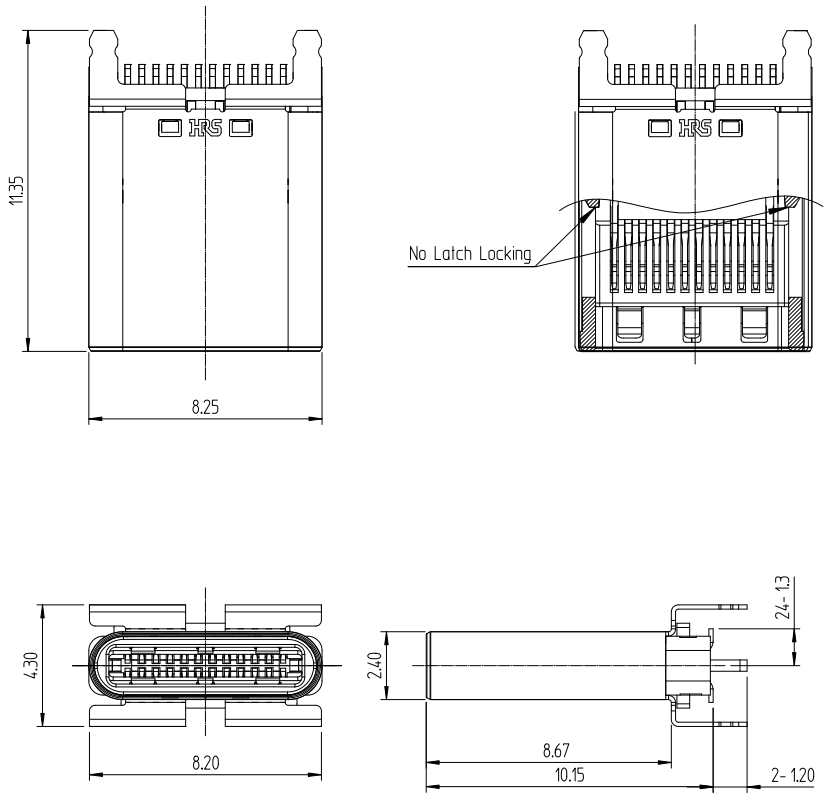

Recommended PCB Layout

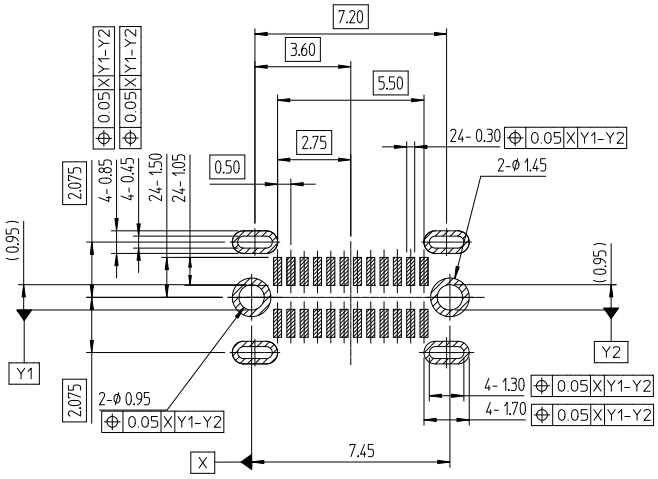

Dec.1.2024 Copyright 2024 HIROSE ELECTRIC CO., LTD. All Rights Reserved.

Plug Unit, Paddle Card (SMT Double-row), 24pos., Supports 20Gbps & 5A

Unit : mm

Part No.	HRS No.	Purchase Unit
CX60-24S-UNIT	CL 0480-0465-0-00	150pcs per tray

- TID No. 5,200,000,291
- PCB Wire Soldering Type

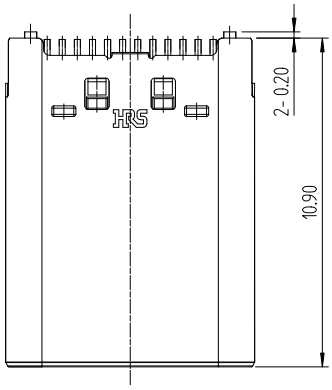

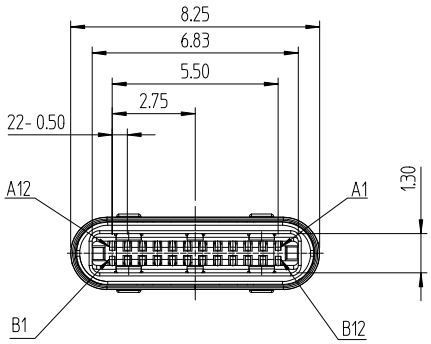

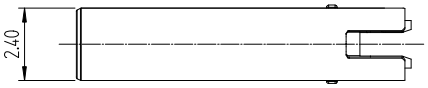

Recommended PCB Layout

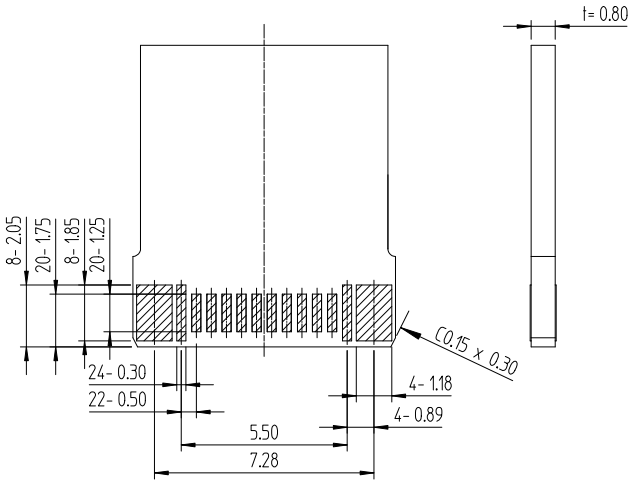

Dec.1.2024 Copyright 2024 HIROSE ELECTRIC CO., LTD. All Rights Reserved.

Plug Shell

Unit : mm

Part No.	HRS No.	Purchase Unit
CX60-SLDA	CL 0480-0522-0-00	3000pcs per reel

- Cable Diameter：ø4.8

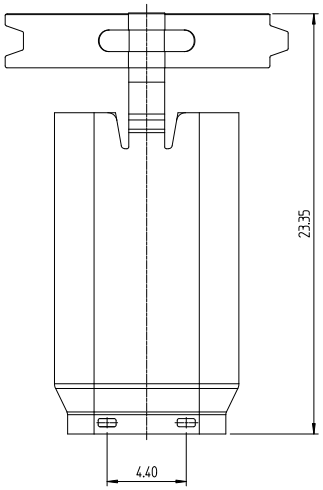

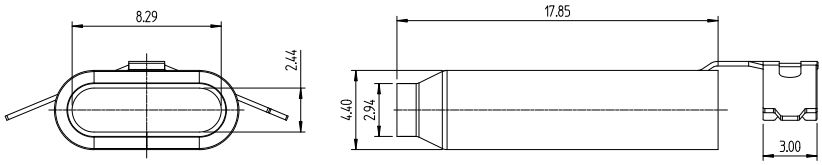

Cable Assembly, Slim Type, Cable Length 1m, 24pos., Supports 20Gbps & 5A

Unit : mm

Part No.	HRS No.	Purchase Unit
CX60-24S-1000-C1	CL 0480-0823-0-00	1pc per bag

- TID No. 5648

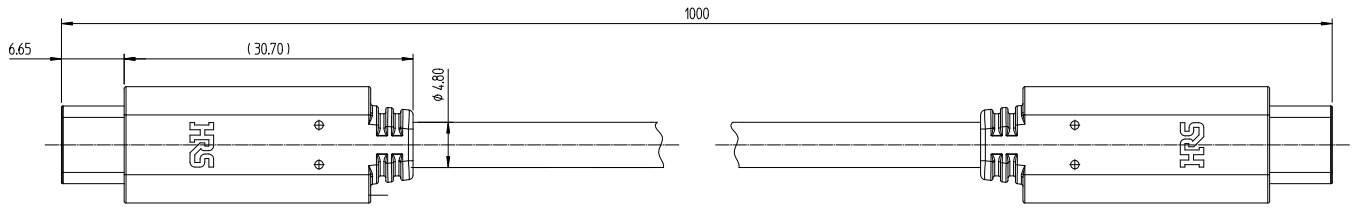

Dec.1.2024 Copyright 2024 HIROSE ELECTRIC CO., LTD. All Rights Reserved.

Cable Assembly, Screw Locking Type [Dual Screw], Cable Length 1m, 24pos., Supports 20Gbps & 5A

Unit : mm

Part No.	HRS No.	Purchase Unit
CX60-24S-1000-CD	CL 0480-0777-0-00	1pc per bag

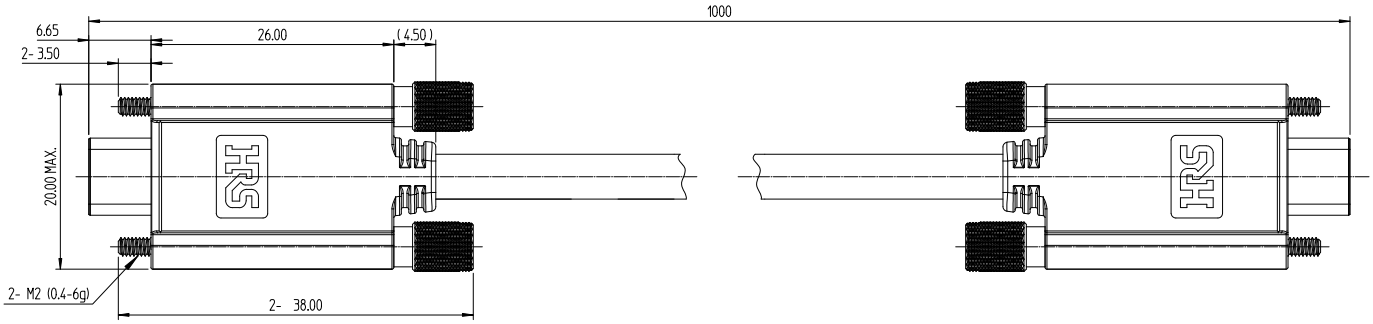

Cable Assembly, Screw Locking Type [Single Screw], Cable Length 1m, 24pos., Supports 20Gbps & 5A

Unit : mm

Part No.	HRS No.	Purchase Unit
CX60-24S-1000-CS	CL 0480-0778-0-00	1pc per bag

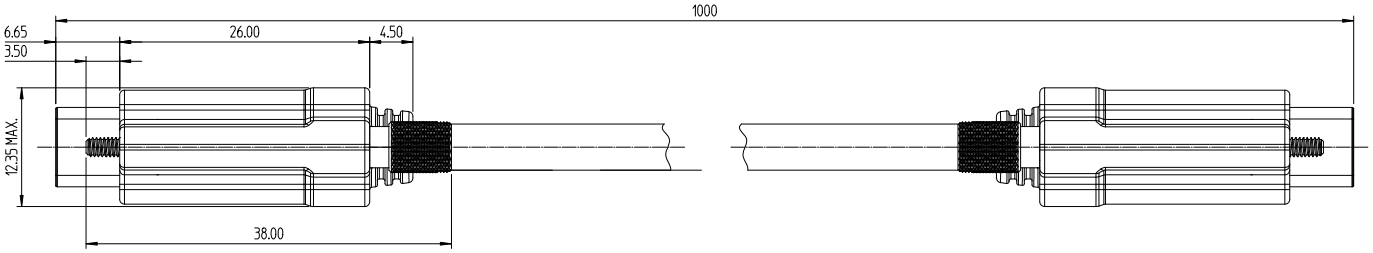

*Screw locking type products comply with the "Universal Serial Bus Type-C Locking Connector Specification Revision 1.0".
Please refer to the standard for details.
https://www.usb.org/sites/default/files/documents/usb_type-c_locking_connector_specification_rev_1_0_20160309_0.pdf

Dec.1.2024 Copyright 2024 HIROSE ELECTRIC CO., LTD. All Rights Reserved.

Usage Precautions

1. Please handle connectors with care. Excessive external force may damage the connectors.
2. To extract the plug, hold the plug body itself and remove straight from the receptacle.
   Do not pull on the cable to extract the plug as this may damage the connector.
3. Due to the assembly process there may be some abrasions on the surface of the receptacle or plug.
   This does not have a negative impact on the performance of the product.
4. Since the surface of the receptacle is plated, the appearance may differ from lot to lot but this does not affect the product performance.

While Taking into Consideration

Specifications mentioned in this catalog are reference values.
When considering to order or use this product, please review the Drawing and Product Specifications sheets.
Use an appropriate cable when using the connector in combination with cables.
If considering usage of a non-specified cable, please contact your sales representative.
If assembly process is done by jigs & tools which are not identified by Hirose, the warranty of the product may be affected.
If considering usage for below mentioned applications, please contact your sales representative.
In cases where the application will demand a high level of reliability, such as automotive, medical instruments, public infrastructure, aerospace/defense etc. Hirose must review before assurance of reliability can be given.

Dec.1.2024 Copyright 2024 HIROSE ELECTRIC CO., LTD. All Rights Reserved.

HIROSE

HIROSE ELECTRIC CO., LTD
2-6-3,Nakagawa Chuoh,Tsuzuki-Ku,Yokohama-Shi 224-8540,JAPAN
https://www.hirose.com/

※ The contents of this catalog are current as of date of 07/ 2024. Contents are subject to change without notice for the purpose of improvements.
※ The HRS logo and "HIROSE" are trademarks of HIROSE ELECTRIC CO., LTD.