Product Data Sheet

GW27023

27 COMBI Range

A complete, versatile system of modular containers, perfectly integrable in the SYSTEM domestic range and able to meet the high protection installation requirements of the residential, commercial and industrial sectors. The 27 COMBI range is available both in the IP40 version and in watertight versions with IP55, IP65 and IP66 degree of protection, recommended for all outdoor applications which are subjected to extreme atmospheric conditions.

Description	8 modules	Colour	Grey RAL 7035
No. knockout holes Ø23	10 on sides / 2 on the bottom	Type of knockout holes	Removable with tool
IP degree	IP40	Insulation class	II
Mechanical resistance	IK07	Configuration	Module 4 x 2
Compartment pre-arrangement	2	Characteristics	Halogen free
Lid screws	Corrosion-resistant steel	Torque screws tightening	0.8 NM
Outer dim. LxHxD (mm)	132x132x55	Glow Wire Test	650 °C
Thermo-pressure with ball	70 °C	Standard	EN 60670-1
Installation temperature	-25 +60 °C	Electrocod	0212

BEHAVIOUR WITH CHEMICAL AND ATMOSPHERIC AGENTS

Saline solution	Acids		Bases		Solvents				Mineral oil	UV rays
	Concentrated	Diluited	Concentrated	Diluited	Hexane	Benzol	Acetone	Alcohol		
Resistant	Limited resistance	Resistant	Resistant	Resistant	Limited resistance	Not resistant	Not resistant	Not resistant	Limited resistance	Resistant

DIMENSIONAL

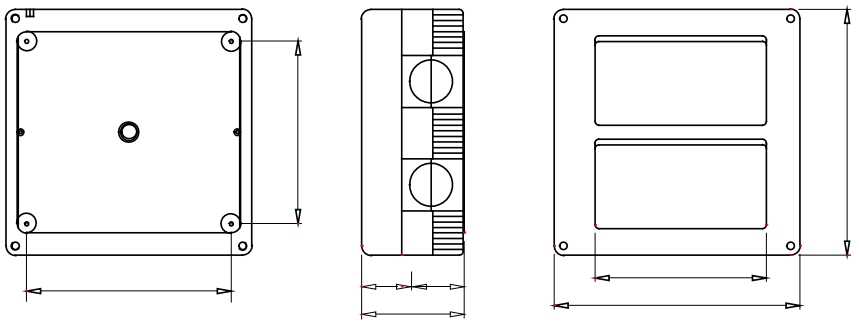

TECHNICAL SYMBOLOGY

Removable with tool | IP40 | II | IK07 | Halogen free | 650 °C | 70 °C

STANDARDS/APPROVALS

GEWISS S.p.A. Via A. Volta, 1
24069 Cenate Sotto - Bergamo - Italy
tel. +39 035 94 61 11 fax +39 035 94 69 09
Company subject to the management and coordination of Polifin S.p.A.

www.gewiss.com
sat@gewiss.com
Last update 23/01/2026

Data, measures, designs and pictures are shown only as informative purposes, and could be changed without previous notice