SYMMETRIC 1A POWER SUPPLY

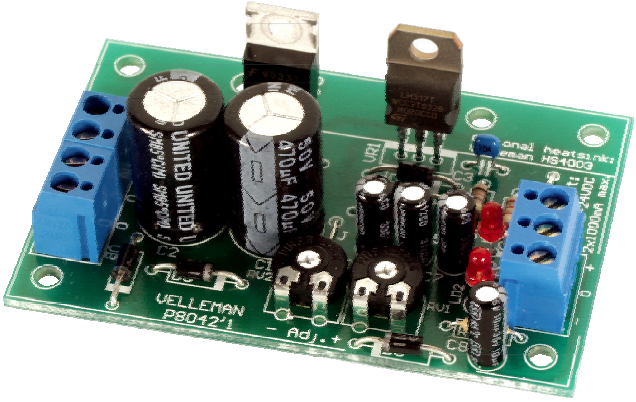

K8042

Low cost universal symmetric power supply

ILLUSTRATED ASSEMBLY MANUAL

H8042IP-1

sales@prom-elec.com / ООО ПРОМЭЛЕКТРОНИКА

Features

- ☑ low cost universal symmetric power supply
- ☑ just add a suitable transformer and a heatsink
- ☑ ideal for e.g. op-amp applications, amplifiers, ...
- ☑ trimmers can be replaced by potmeters to allow continuous adjustment of output voltage
- ☑ LED output indicators
- ☑ compact size

Specifications :

- positive and negative output adjustable between 1.2 and 24VDC
- output current: up to 2 x 1A continuous (with suitable heatsink)
- max. input voltage: 2 x 24VAC
- very good line and load regulation
- low ripple
- short circuit protection
- thermal protection
- optional heatsink: HS4003 (for maximum 20W dissipation)
- dimensions: 78 x 52 x 24mm (3.1" x 2.0" x 0.9")

1. Assembly (Skipping this can lead to troubles !)
Ok, so we have your attention. These hints will help you to make this project successful. Read them carefully.

1.1 Make sure you have the right tools:

- A good quality soldering iron (25-40W) with a small tip.
- Wipe it often on a wet sponge or cloth, to keep it clean; then apply solder to the tip, to give it a wet look. This is called 'thinning' and will protect the tip, and enables you to make good connections. When solder rolls off the tip, it needs cleaning.
- Thin raisin-core solder. Do not use any flux or grease.
- A diagonal cutter to trim excess wires. To avoid injury when cutting excess leads, hold the lead so they cannot fly towards the eyes.
- Needle nose pliers, for bending leads, or to hold components in place.
- Small blade and Phillips screwdrivers. A basic range is fine.

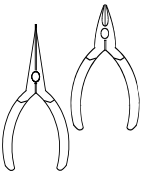

For some projects, a basic multi-meter is required, or might be handy

1.2 Assembly Hints :

⇒ Make sure the skill level matches your experience, to avoid disappointments.
⇒ Follow the instructions carefully. Read and understand the entire step before you perform each operation.
⇒ Perform the assembly in the correct order as stated in this manual
⇒ Position all parts on the PCB (Printed Circuit Board) as shown on the drawings.
⇒ Values on the circuit diagram are subject to changes.
⇒ Values in this assembly guide are correct*
⇒ Use the check-boxes to mark your progress.
⇒ Please read the included information on safety and customer service

* Typographical inaccuracies excluded. Always look for possible last minute manual updates, indicated as 'NOTE' on a separate leaflet.

1.3 Soldering Hints :

1- Mount the component against the PCB surface and carefully solder the leads

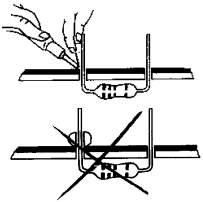

2- Make sure the solder joints are cone-shaped and shiny

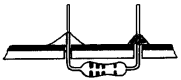

3- Trim excess leads as close as possible to the solder joint

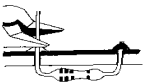

AXIAL COMPONENTS ARE TAPED IN THE CORRECT MOUNTING SEQUENCE !

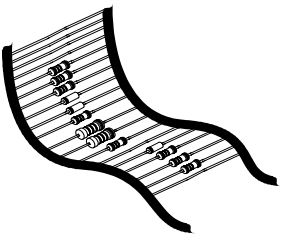

REMOVE THEM FROM THE TAPE ONE AT A TIME !

You will find the colour code for the resistances and the LEDs on our website: http://www.velleman.be/common/service.aspx

1. Jump wire

❑ J

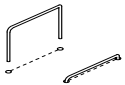

2. Diodes. Watch the polarity !

❑ D1 : 1N4007
❑ D2 : 1N4007
❑ D3 : 1N4007
❑ D4 : 1N4007
❑ D5 : 1N4007
❑ D6 : 1N4007
❑ D7 : 1N4007
❑ D8 : 1N4007
❑ D9 : 1N4007
❑ D10 : 1N4007

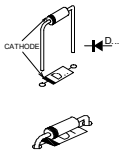

3. Resistors

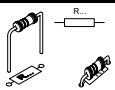

❑ R1 : 120 (1 - 2 - 1 - B)
❑ R2 : 120 (1 - 2 - 1 - B)
❑ R3 : 2K2 (2 - 2 - 2 - B)
❑ R4 : 2K2 (2 - 2 - 2 - B)

4. Capacitors.

❑ C3 : 100nF (104)
❑ C4 : 100nF (104)

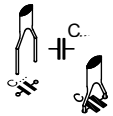

5. Trim potentiometers

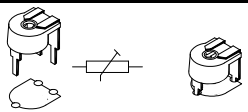

❑ RV1 : 2K2 (2K5)
❑ RV2 : 2K2 (2K5)

6. Terminal blocks

❑ SK1 : 2p
❑ SK2 : 2p

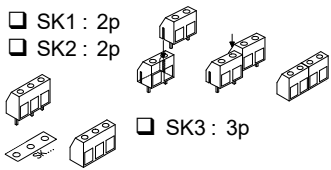

❑ SK3 : 3p

7. LEDs. Watch the polarity!

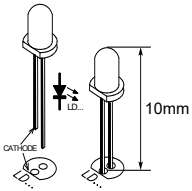

❑ LD1 : 3mm Red
❑ LD2 : 3mm Red

8. Electrolytic Capacitors. Watch the polarity !

❑ C5 : 10µF
❑ C6 : 10µF
❑ C7 : 10µF
❑ C8 : 10µF

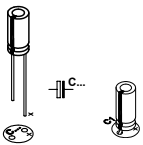

❑ C1 : 1000µF
❑ C2 : 1000µF

9. Voltage regulators

- ❑ VR1 : LM317
- ❑ VR2 : LM337

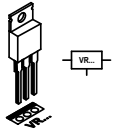

10. Heatsink

☝ **When you want to use the maximal 20W dissipation mount the optional heat sink, ordernr. : HS4003.**

❶

- ❑ Apply a little heat conducting paste (obtain from your specialized dealer) to one side of an insulation plate and press it with this side against the heatsink, there were the component has to be fitted.
- ❑ Then apply a little heat conducting paste to the component itself, fit the component onto the heatsink and fix it by means of an insulation tube, an 15mm M3 bolt and a nut.

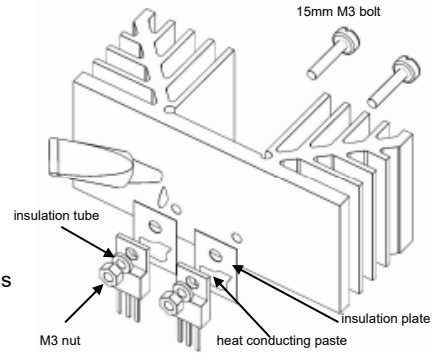

2

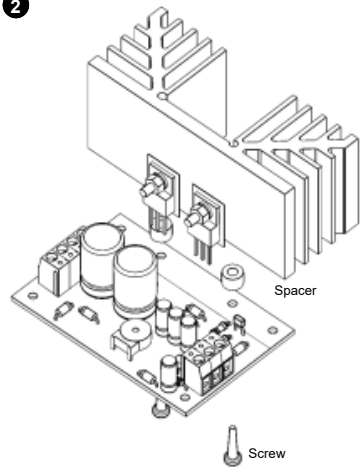

- Fit the components and heatsink onto the PCB and fix it by means of two 5mm spacers and two screws.

3

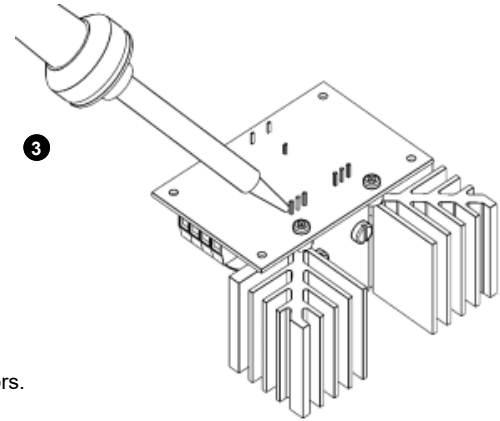

- Solder now the connections of the voltage regulators.

11. Using a metal enclosure as a heatsink

- When mounting the Kit into a enclosure, you have to drill two holes in the backside of the housing to pass the 15mm M3 bolts trough.

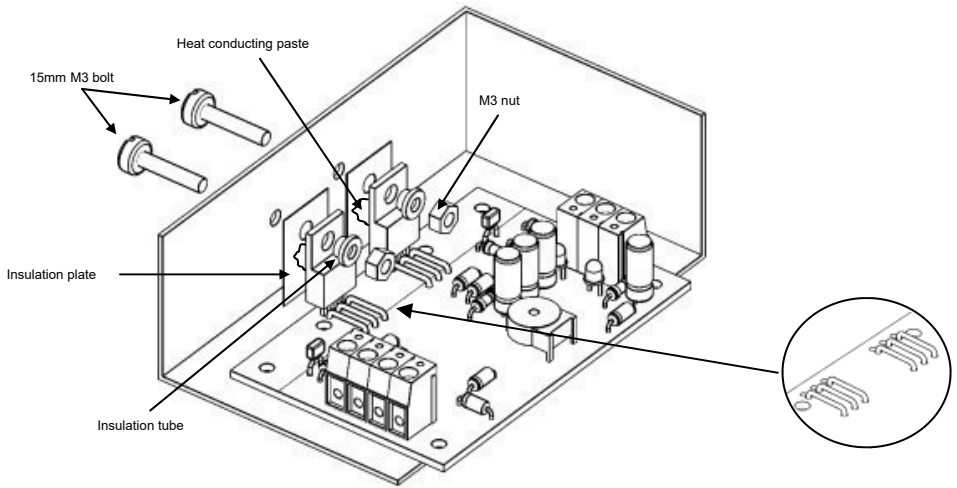

12. Connection

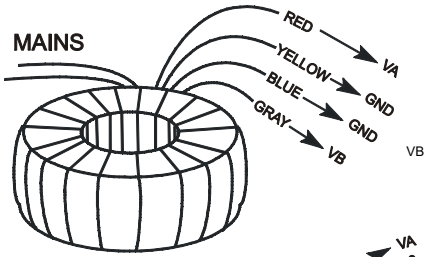

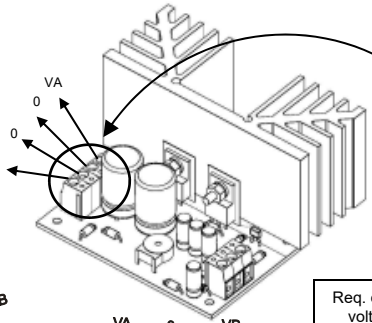

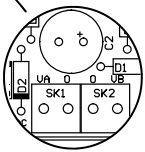

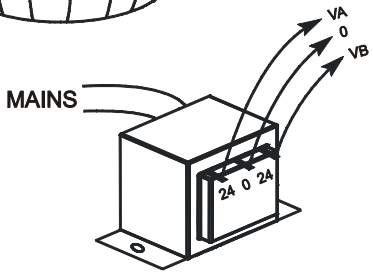

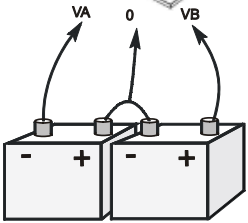

Req. output voltage	Req. AC input voltage (transformer)
+/- 1,2 ... 5V	2 x 9VAC
+/- 5 ... 9V	2 x 12 - 15VAC
+/- 9 ... 12V	2 x 15VAC
+/- 12 ... 15V	2 x 18VAC
+/- 15 ... 18V	2 x 22VAC
Absolute max. AC input : 2 x 24VAC	

13. PCB layout

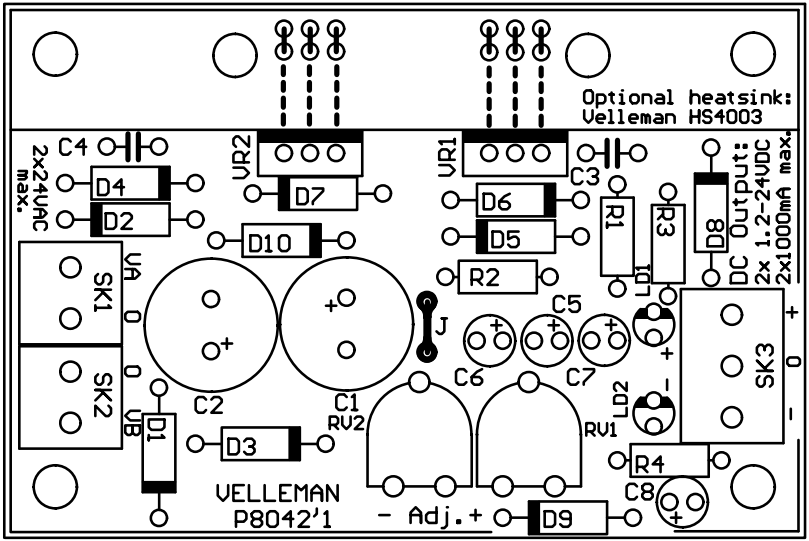

14. Diagram

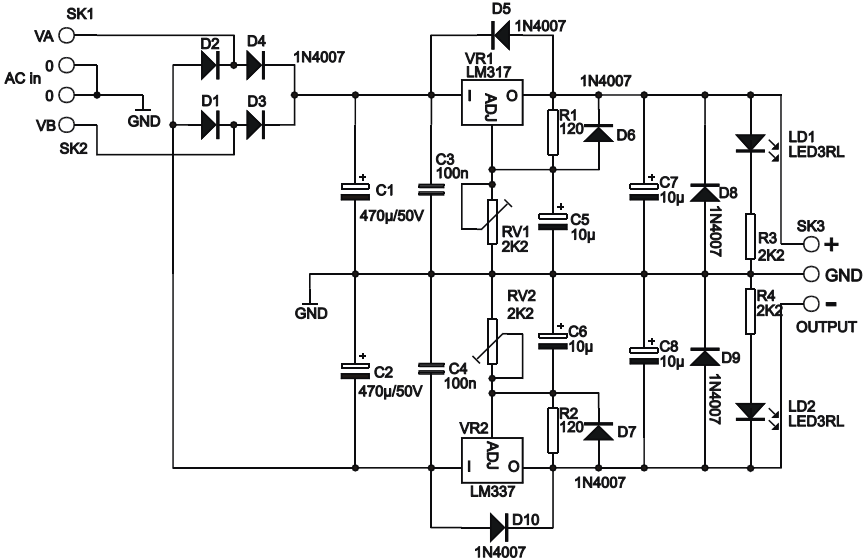
SK1
VA
AC in
0
0
VB
SK2
GND
D2
D4
D1
D3
1N4007
D5
1N4007
VR1
LM317
I
ADJ
O
1N4007
R1
120
D6
C3
100n
C1
470µ/50V
RV1
2K2
C5
10µ
C7
10µ
D8
1N4007
LD1
LED3RL
R3
2K2
SK3
+
GND
GND
RV2
2K2
C6
10µ
R4
2K2
-
OUTPUT
C2
470µ/50V
C4
100n
C8
10µ
D9
1N4007
LD2
LED3RL
R2
120
D7
VR2
ADJ
I
O
LM337
1N4007
D10
1N4007

VELLEMAN NV
Legen Heirweg 33, B-9890 GAVERE
Belgium (Europe)

Modifications and typographical errors reserved © Velleman nv.
H8042IP'1 - 2014 (rev.2)

5 410329 327132