MEDER electronic
Products for tomorrow...

Europe: +49 / 7731 8399 0 | Email: info@meder.com
USA: +1 / 508 295 0771 | Email: salesusa@meder.com
Asia: +852 / 2955 1682 | Email: salesasia@meder.com

Item No.:
9151710022
Item:
MK15-B-2

Dimensions

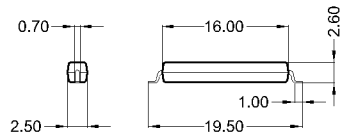

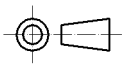

unspecified tolerances ± 0.1mm
nicht spezifizierte Toleranzen ± 0.1mm

Marking
Sensibility and DateCode
EN60062

MEDER - B YM

Lötvorschrift / soldering information
reflow soldering conditions according to JEDEC norm J-STD-020C

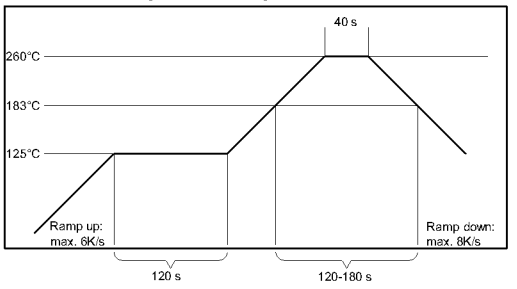

Tape and Reel Packaging (IEC 60286-3)

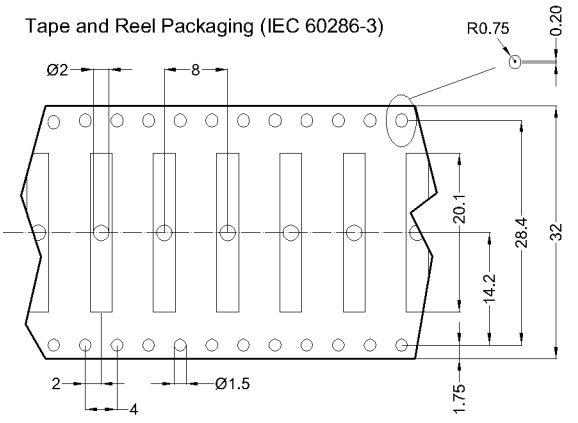

Magnetic properties	Conditions	Min	Typ	Max	Unit
Pull-In	at 20°C	18		38	
Test equipment		KMS-11			
Pull-In in milliTesla (modified conta	MS150 - phys. caused tolerance +/- 0.1mT	1,2		2,1	mT
Test equipment		MS-150			

Contact data 66/1	Conditions	Min	Typ	Max	Unit
Contact-material		Rhodium			
Contact rating	Any DC combination of V & A not to exceed their individual max.'s			10	W
Switching voltage	DC or Peak AC			180	V
Switching current	DC or Peak AC			0,5	A
Contact resistance static	Measured with 40% overdrive Start Value			150	mOhm
Breakdown voltage (>20 AT)	according to IEC 255-5	200			VDC

Special Product Data	Conditions	Min	Typ	Max	Unit
Housing material		mineral-filled epoxy			

Environmental data	Conditions	Min	Typ	Max	Unit
Shock	1/2 sine wave duration 11ms			30	g
Vibration	from 10 - 2000 Hz			20	g
Ambient temperature		-40		130	°C
Storage temperature		-50		130	°C
Cleaning		fully sealed			

sales@prom-elec.com / ООО ПРОМЭЛЕКТРОНИКА