RoHS

Specification

Customer Name：_____

Customer P/N：OF-SMD5730

Factory P/N：_____

Sending Date：_____

sales@prom-elec.com / ООО ПРОМЭЛЕКТРОНИКА

Features

- PLCC-2 Package.
- Extremely wide viewing angle.
- Suitable for all SMT assembly and solder process.
- Available on tape and reel.
- Moisture sensitivity level: Level 4.
- Package:2500pcs/reel.
- RoHS compliant.

Description

The White LED which was fabricated using a blue chip and the phosphor

ATTENTION
OBSERVE PRECAUTIONS
FOR HANDLING
ELECTROSTATIC
DISCHARGE
SENSITIVE
DEVICES

Applications

■ Optical indicator

■ Indoor display

■ Automotive lighting

■ Backlight for LCD, switch and Symbol, display

■ Tubular light application

■ General use

Package Dimensions

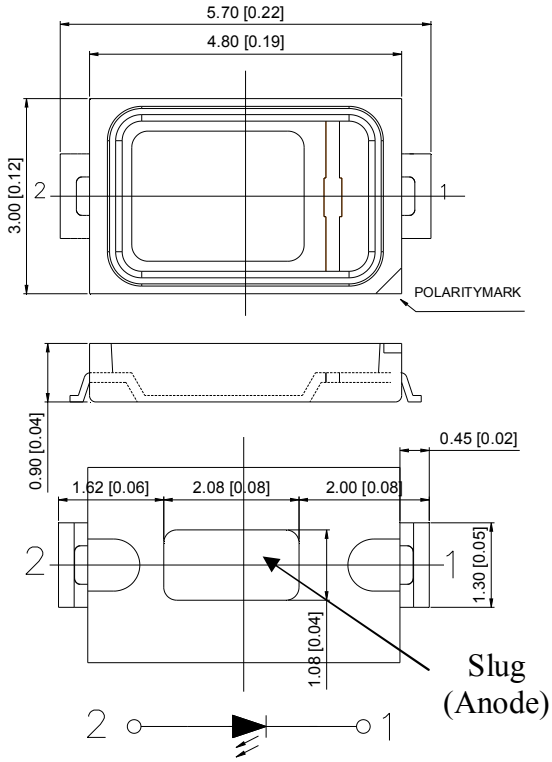

Recommended Soldering Pattern

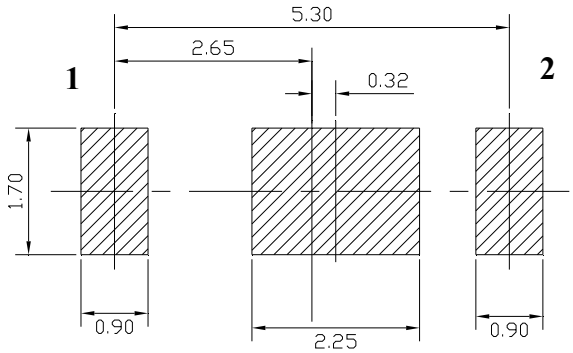

Notes:

1. All dimension units are millimeters.

2.All dimension tolerance is ±0.15mm unless otherwise noted.

Selection Guide

Part No.	Chip Materials	Lens Type
OF-SMD5730	InGaN	Yellow Diffused

Mass Production list

Part No.	CCT（K） Min	CCT（K） Typ	CCT（K） Max	Φ（lm） Min	Φ（lm） Typ	Test Conditions
OF-SMD5730	5700	6000	6500	58	63	IF=150mA
	4750	5000	5300	58	63	IF=150mA
	3800	4000	4250	58	63	IF=150mA
	2800	3000	3100	53	58	IF=150mA

Electrical / Optical Characteristics at Ta=25°C

Parameter	Symbol	Min.	Typ.	Max.	Units	Test Conditions
Forward Voltage	VF	2.8	- -	3.6	V	IF=150mA
Viewing Angle	2θ1/2	- -	120	- -	deg	IF=150mA
Color Rendering Index	Ra	70	- -	- -		IF=150mA
Reverse Current	IR	- -	- -	10	μA	VR = 5V

Note:

1. θ1/2 is the angle from optical centerline where the luminous intensity is 1/2 the optical centerline value.

2. the above luminous flux measurement allowance tolerance ±10%.

3. the above Color Rendering Index measurement allowance tolerance ：±2

4.The above forward voltage measurement allowance tolerance is ±0.1V.

5. The above color coordinates measurement allowance tolerance is ±0.003.

Absolute Maximum Ratings at Ta=25°C

Parameter	Symbol	Rating	Units
Power Dissipation	Pd	500	mW
Forward Current	IF	150	mA
Peak Forward Current [1]	IFP	200	mA
Reverse Voltage	VR	5	V
Electrostatic Discharge (HBM)	ESD	1000	V
Operating Temperature	Topr	-40 ~ +85	℃
Storage Temperature	Tstg	-40 ~ +100	℃
Thermal Resistance（Junction / Soldering point）	Rthj-s	22	℃/W
Junction Temperature	Tj	115	℃

Note:

1. 1/10 Duty cycle, 0.1ms pulse width.

Typical optical characteristics curves

Soldering Temperature vs. Forward Current

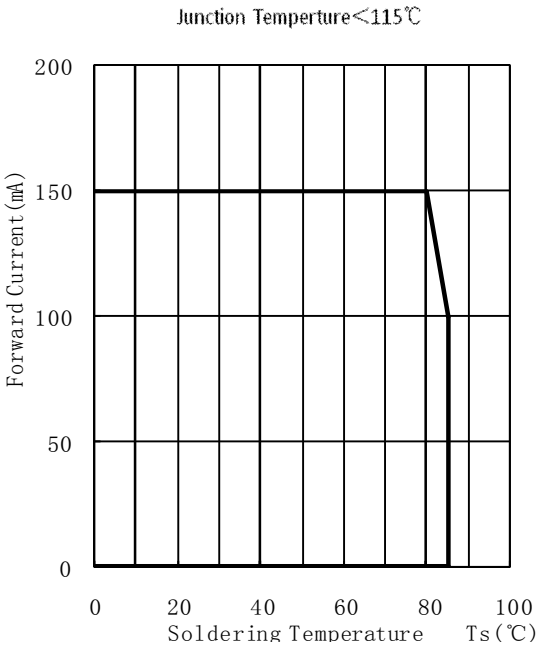

Forward Current VS. Relative Intensity

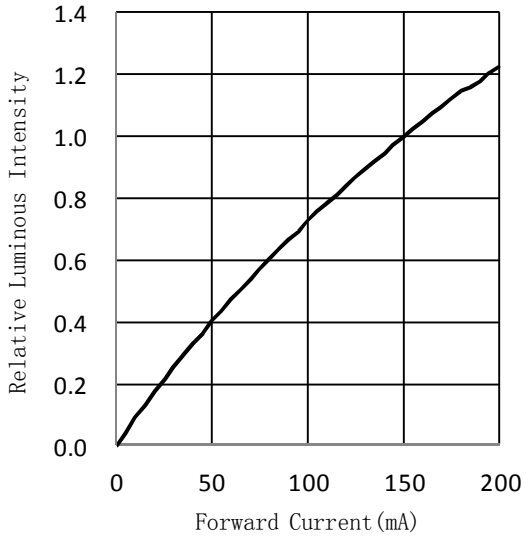

Forward Voltage VS. Forward Current

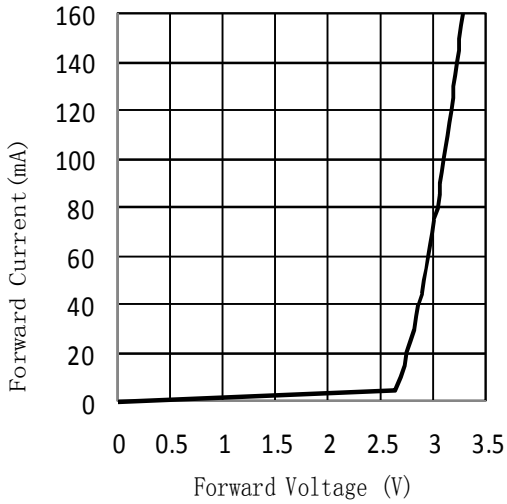

Ambient Temperature VS. Relative Intensity

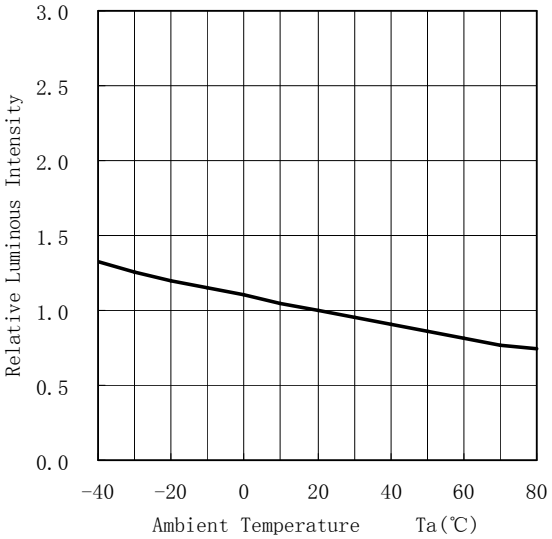

Typical optical characteristics curves

Relative spectral emission

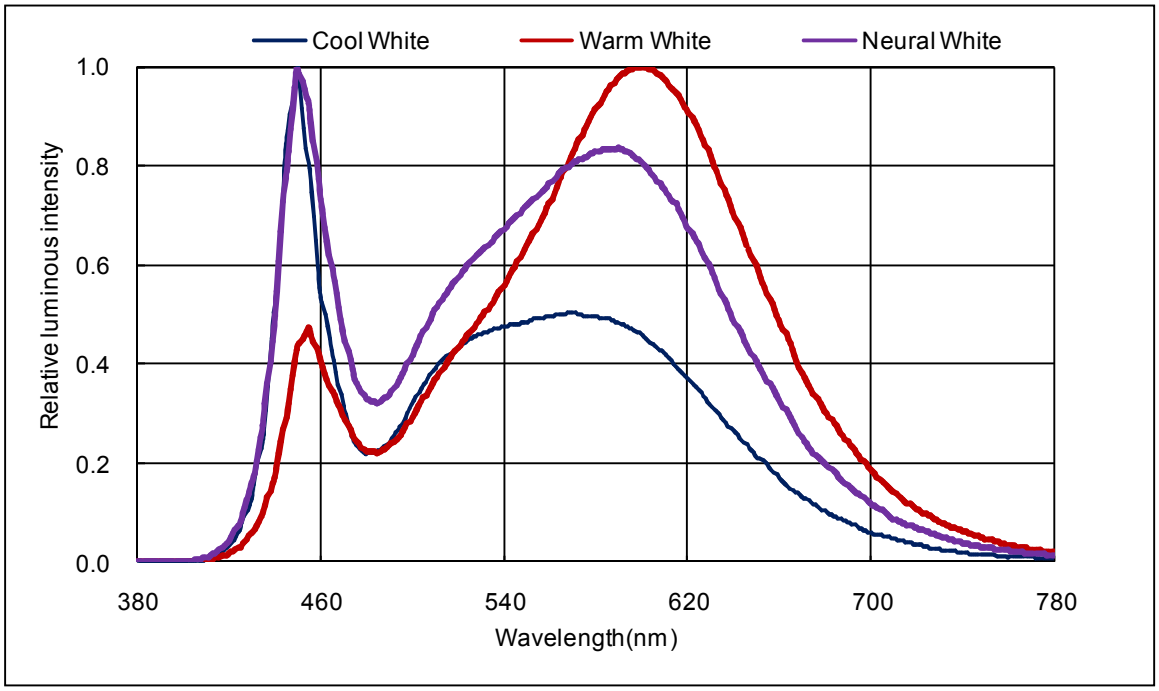

Radiation diagram

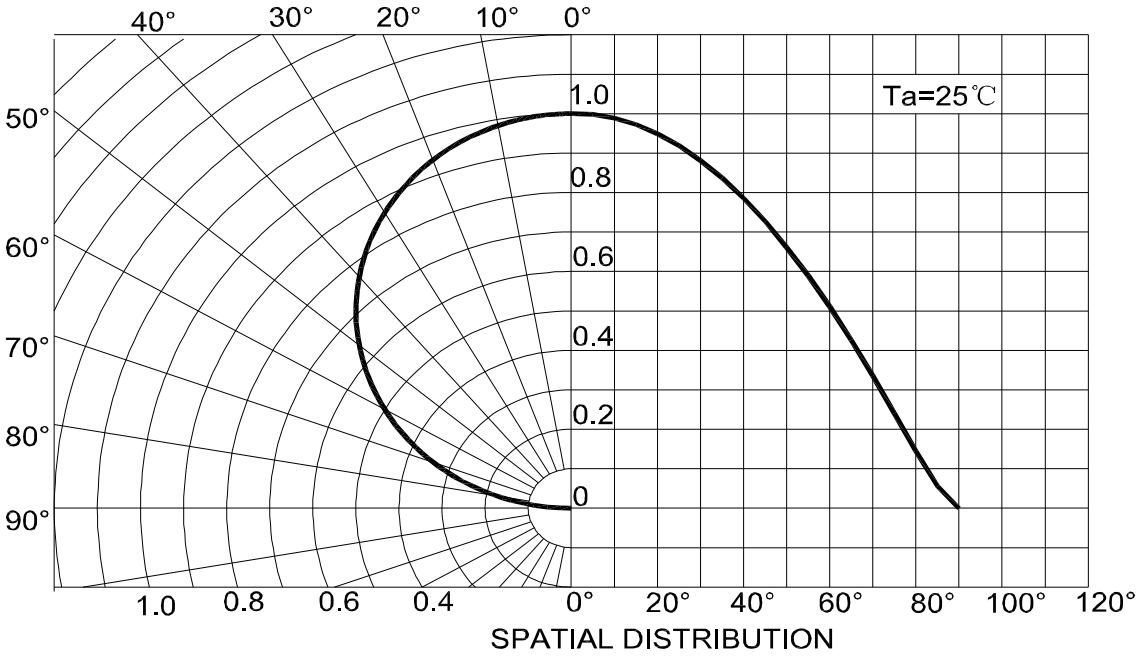

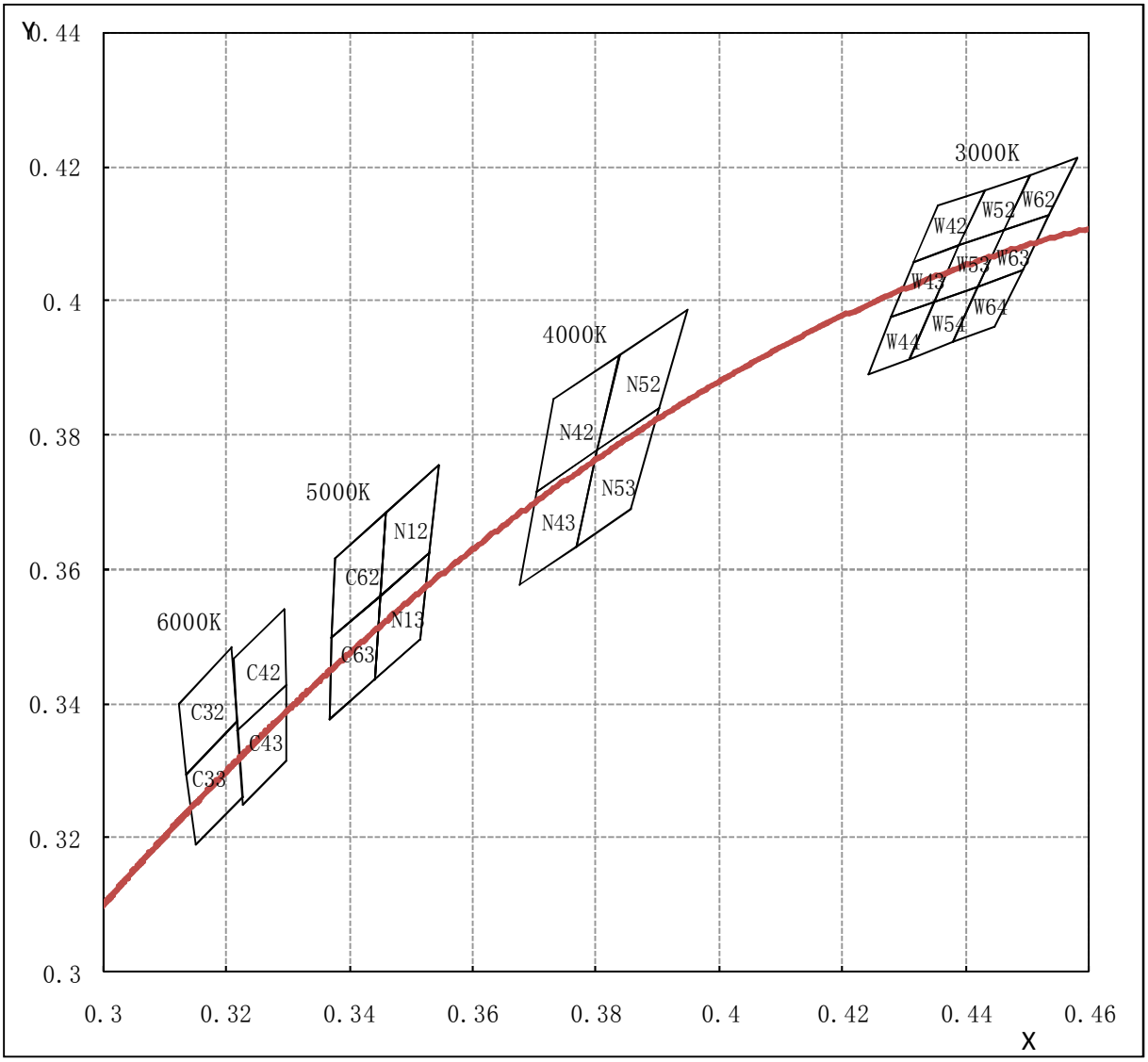
Y
0.44
0.42
0.4
0.38
0.36
0.34
0.32
0.3
0.3
0.32
0.34
0.36
0.38
0.4
0.42
0.44
0.46
X
3000K
W42
W52
W62
W43
W53
W63
W44
W54
W64
4000K
N52
N42
N53
N43
5000K
N12
C62
N13
C63
6000K
C42
C32
C43
C33

Bin Range of ChromatIclty Coordlnate

CCT	Bin Code Bin	CIE_x	CIE_y	Bin Code	CIE_x	CIE_y
6000K	C32 6000-6500K	0. 3205	0. 3481	C42 5700-6000K	0. 3211	0. 3468
		0. 3117	0. 3393		0. 3294	0. 3542
		0. 3131	0. 329		0. 3296	0. 3429
		0. 3213	0. 3371		0. 3219	0. 3360
	C33 6000-6500K	0. 3213	0. 3371	C43 5700-6000K	0. 3219	0. 3360
		0. 3131	0. 329		0. 3296	0. 3429
		0. 3150	0. 3190		0. 3298	0. 3315
		0. 3226	0. 3262		0. 3227	0. 3251
5000K	C62 5000-5300K	0. 3376	0. 3616	N12 4750-5000K	0. 3461	0. 3685
		0. 3461	0. 3685		0. 3545	0. 3754
		0. 3451	0. 3561		0. 3530	0. 3625
		0. 3372	0. 3497		0. 3451	0. 3561
	C63 5000-5300K	0. 3372	0. 3497	N13 4750-5000K	0. 3451	0. 3561
		0. 3451	0. 3561		0. 3530	0. 3625
		0. 3441	0. 3437		0. 3514	0. 3496
		0. 3368	0. 3378		0. 3441	0. 3437
4000K	N42 4000-4250K	0. 3731	0. 3853	N52 3800-4000K	0. 3839	0. 3920
		0. 3839	0. 3920		0. 3947	0. 3987
		0. 3803	0. 3777		0. 3903	0. 3839
		0. 3703	0. 3716		0. 3803	0. 3777
	N43 4000-4250K	0. 3703	0. 3716	N53 3800-4000K	0. 3803	0. 3777
		0. 3803	0. 3777		0. 3903	0. 3839
		0. 3767	0. 3634		0. 3858	0. 3690
		0. 3675	0. 3578		0. 3767	0. 3634

Bin Range of ChromatIclty Coordlnate

CCT	Bin Code Bin	CIE_x	CIE_y	Bin Code	CIE_x	CIE_y
3000K	W42 3000-3100K	0.4354	0.4142	W43 3000-3100K	0.4316	0.4059
		0.4430	0.4165		0.4390	0.4082
		0.4390	0.4082		0.4350	0.3998
		0.4316	0.4059		0.4279	0.3975
	W44 3000-3100K	0.4279	0.3975	W52 2900-3000K	0.4430	0.4165
		0.4350	0.3998		0.4505	0.4189
		0.4310	0.3915		0.4463	0.4106
		0.4241	0.3892		0.4390	0.4082
	W53 2900-3000K	0.4390	0.4082	W54 2900-3000K	0.4350	0.3998
		0.4463	0.4106		0.4420	0.4022
		0.4420	0.4022		0.4378	0.3939
		0.4350	0.3998		0.4310	0.3915
	W62 2800-2900K	0.4505	0.4189	W63 2800-2900K	0.4463	0.4106
		0.4581	0.4212		0.4536	0.4129
		0.4536	0.4129		0.4492	0.4045
		0.4463	0.4106		0.4420	0.4022
	W64 2800-2900K	0.4420	0.4022			
		0.4492	0.4045			
		0.4447	0.3962			
		0.4378	0.3939			

Reliability Test Items And Conditions

Test Items	Ref.Standard	Test Condition	Time	Quantity	Ac/Re
Reflow	JESD22-B106	Temp:260℃max T=10 sec	3 times.	22Pcs.	0/1
Temperature Cycle	JESD22-A104	100℃±5℃ 30 min. ↑↓5 min -40℃±5℃ 30 min.	100 Cycles	22Pcs.	0/1
High Temperature Storage	JESD22-A103	Temp:100℃±5℃	1000Hrs.	22Pcs.	0/1
Low Temperature Storage	JESD22-A119	Temp:-40℃±5℃	1000Hrs.	22Pcs.	0/1
Life Test	JESD22-A108	Ta=25℃±5℃ IF=150mA	1000Hrs.	22Pcs.	0/1
High Temperature High Humidity Life Test	JESD22-A101	85℃±5℃/ 85%RH IF=100mA	1000Hrs.	22Pcs.	0/1

Criteria For Judging Damage

Test Items	Symbol	Test Condition	Criteria For Judgement	
			Min.	Max.
Forward Voltage	VF	IF=150mA	- -	U.S.L*)x1.1
Reverse Current	IR	VR = 5V	- -	10uA
Luminous Flux	Im	IF=150mA	L.S.L*)x0.7	- -

U.S.L: Upper standard level

L.S.L: Lower standard level

*The technical information shown in the data sheets are limited to the typical characteristics and circuit examples of the referenced products. It does not constitute the warranting of industrial property nor the granting of any license.

SMT Reflow Soldering Instructions

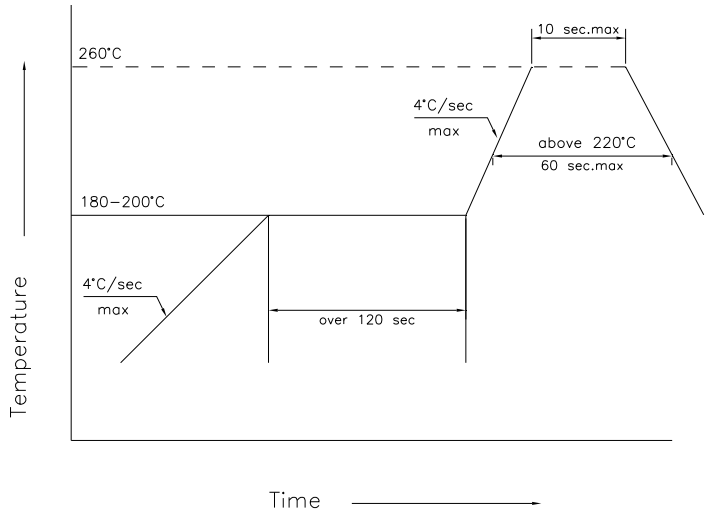

1.Reflow soldering should not be done more than two times.
2.When soldering , do not put stress on the LEDs during heating

Soldering iron

1.When hand soldering, keep the temperature of iron below less 300℃ less than 3 seconds

2.The hand solder should be done only one times

Repairing

Repair should not be done after the LEDs have been soldered. When repairing is unavoidable, a double-head soldering iron should be used (as below figure). It should be confirmed in advance whether the characteristics of LEDs will or will not be damaged by repairing.

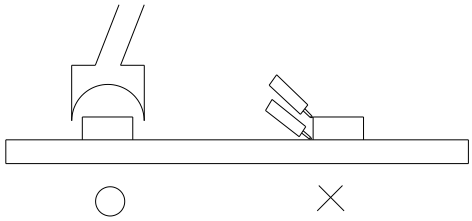

Cautions

The encapsulated material of the LEDs is silicone. Therefore the LEDs have a soft surface on the top of package. The pressure to the top surface will be influence to the reliability of the LEDs. Precautions should be taken to avoid the strong pressure on the encapsulated part. So when use the picking up nozzle, the pressure on the silicone resin should be proper.

Handling Precautions

Compare to epoxy encapsulant that is hard and brittle, silicone is softer and flexible. Although its characteristic significantly reduces thermal stress, it is more prone to damage by external mechanical force . As a result, Special handling precautions must be observed during assembling using silicone encapsulated LED products, Failure to comply might leads to damage and premature failure of the LED.

1.Handle the component along the side surface by using forceps or appropriate tools; do not directly touch or Handle the silicone lens surface, it may damage the internal circuitry.

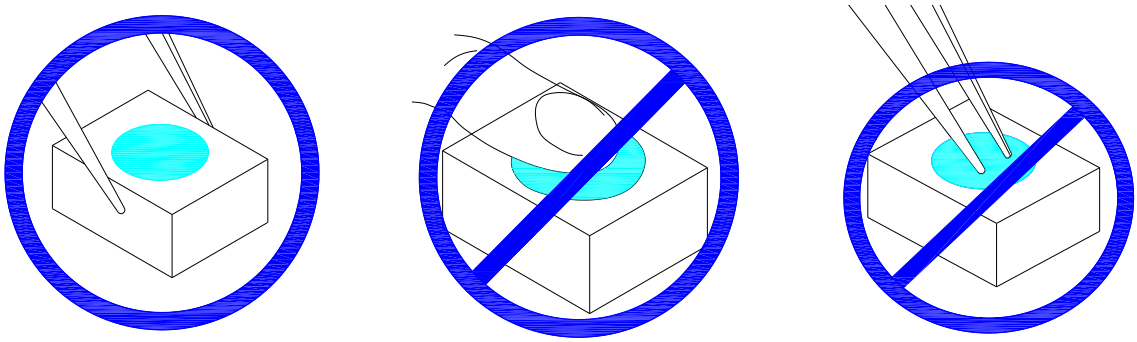

2.The outer diameter of the SMD pickup nozzle should not exceed the size of the LED to prevent air leaks. The inner diameter of the nozzle should be as large as possible. A pliable material is suggested for the nozzle tip to avoid scratching or damaging the LED surface during pickup. The dimensions of the component must be accurately programmed in the pick-and-place machine to insure precise pickup and avoid damage during production.

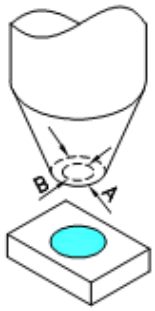

3.Do not stack together assembled PCBs containing LEDs. Impact may scratch the silicone lens or damage the internal circuitry

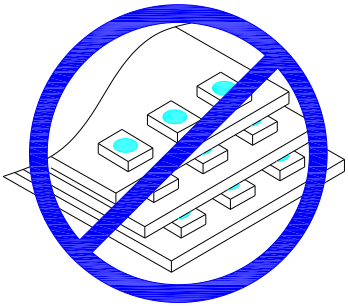

4.Not suitable to operate in acidic environment, PH<7

5.LED operating environment and sulfur element composition cannot be over 100PPM in the LED mating usage material.

6.When we need to use external glue for LED application products, please make sure that the external gluematches the LED packaging glue. Additionally ,as most of LED packaging glue is silica gel, and it has strong Oxygen permeability as well as strong moisture permeability; in order to prevent external material from getting into the inside of LED, which may cause the malfunction of LED, the single content of Bromine element is required to be less than 900PPM,the single content of Chlorine element is required to be less than 900PPM,the total content of Bromine element and Chlorine element in the external glue of the application products is required to be less than 1500PPM

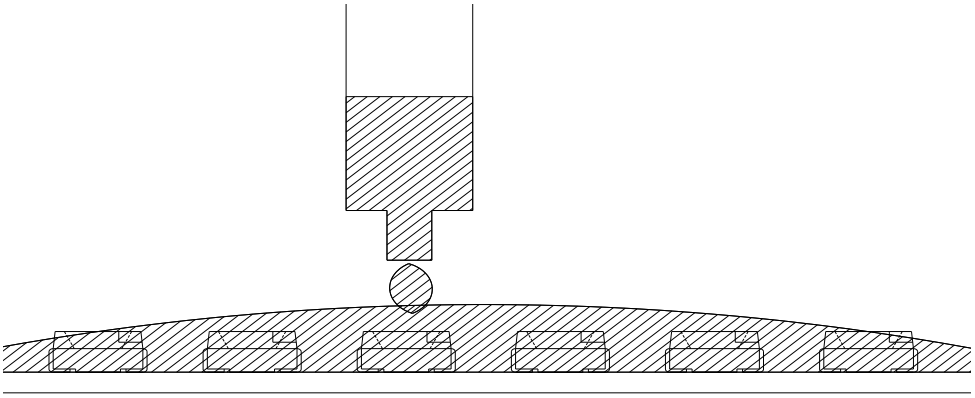

7.Other points for attention, please refer to our LED user manual.

Label

IV: Luminous intensity rank
VF: Forward voltage rank
X/Y: Coordinate rank
TC: Color temperature

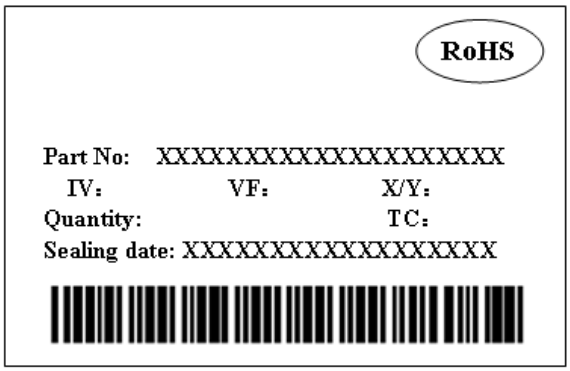

Tape Specifications (Units : mm)

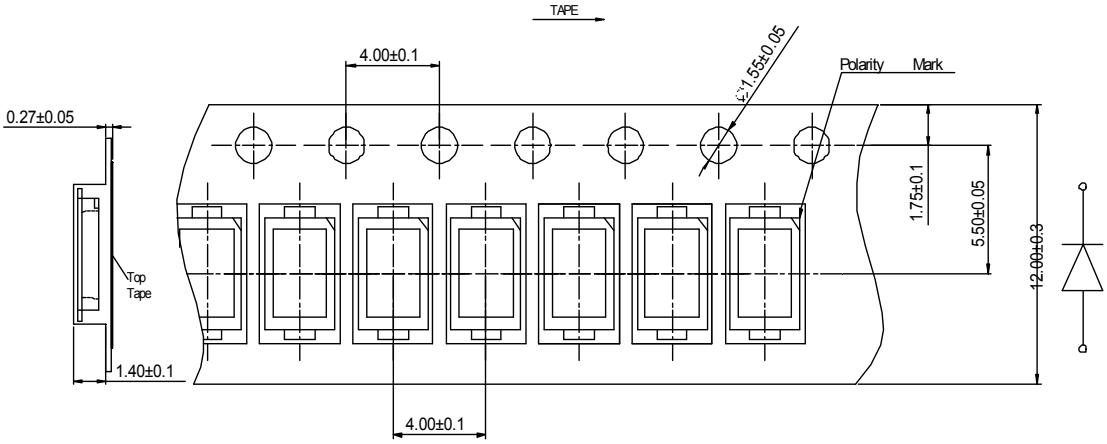

Reel Dimensions

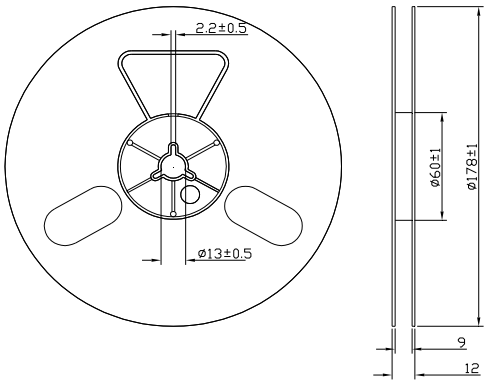

Moisture Resistant Packaging

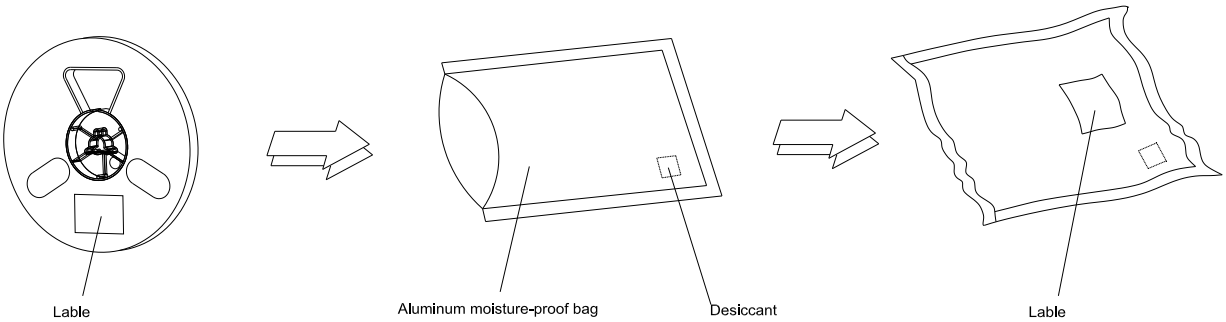

Note: The tolerances unless mentioned is ±0.1mm , Unit: mm