Soldering Irons With Heating Element and Transformer Soldering Irons Quick Start Guide

1. Introduction

Dear Customer! Thank you for your purchase in TME! To protect the environment we have prepared for you this quick start guide. Before operating the unit, please read it carefully. Please visit www.tme.eu Illustrations in this manual are only example images and may differ from the actual item. It does not change their main characteristics.

2. Application

The device is designed for soldering wire ends and electronic components

3. Unit setup and operation

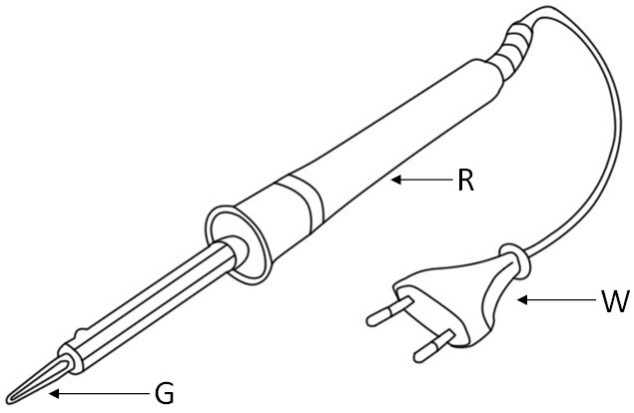

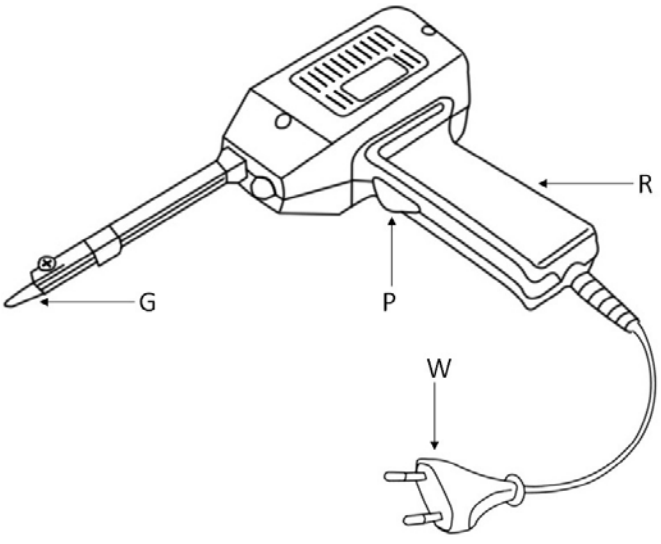

R - Handle,

Transfer Multisort Elektronik Sp. z o.o.
ul. Ustronna 41, 93-350 Łódź, Poland, correspondence address: 90-951 Łódź 40, PO BOX 2071
tel. +48 42 645 54 44, fax +48 42 645 54 70, export@tme.eu, www.tme.eu
VAT ID: PL7290108984, REGON (NACE): 473171710, District Court for Łódź-Śródmieście, NCR: 0000165815, initial capital: 3 300 000 PLN

sales@prom-elec.com / ООО ПРОМЭЛЕКТРОНИКА

G - Soldering tip
W - Power supply plug 230V AC
P - Power switch

- Plug the power cord into the appropriate outlet.
- Put in a safe place until warm up.

4. Precautions

- Do not turn on the unit immediately after moving it from a cold to a warm room. Condensation may damage the device.
- Damaged power cord must be immediately replaced by a qualified technician.
- The device can be used only in well-ventilated areas.
- Do not cover the ventilation holes.
- Never operate the unit with wet hands or when wires are wet as this could cause a short circuit or electric shock.
- Do not place hot device near the flammable objects, liquids or gases.
- Do not use the soldering iron to heat the plastic as it can produce toxic fumes.
- Touching a hot tip to the power cord may cause the insulation to melt and can result in electrical shock.
- There is a danger of burns by liquid solder.
- Use the proper protective clothing.
- Do not work on live parts.
- Do not leave the unit unattended.
- The unit should be kept out of reach of children.
- Do not use soldering iron for purposes other than soldering.
- After finishing the work, turn off the power, unplug the power cord and wait for the device to cool down.
- It is forbidden to make any construction modifications to the device. Unauthorised construction modifications will result in loss of warranty, and may also cause a malfunction or an accident.
- Never use the device as a hair dryer, touch the heating element or direct hot air directly onto the skin.
- Worn electrical equipment can not be disposed of with othe household waste. Worn electrical equipment must be stored in places designated for that.

Electronic Components

Transfer Multisort Elektronik Sp. z o.o.

ul. Ustronna 41, 93-350 Łódź, Poland, correspondence address: 90-951 Łódź 40, PO BOX 2071
tel. +48 42 645 54 44, fax +48 42 645 54 70, export@tme.eu, www.tme.eu

VAT ID: PL7290108984, REGON (NACE): 473171710, District Court for Łódź-Śródmieście, NCR: 0000165815, initial capital: 3 300 000 PLN