L78

Positive voltage regulator ICs

Datasheet - production data

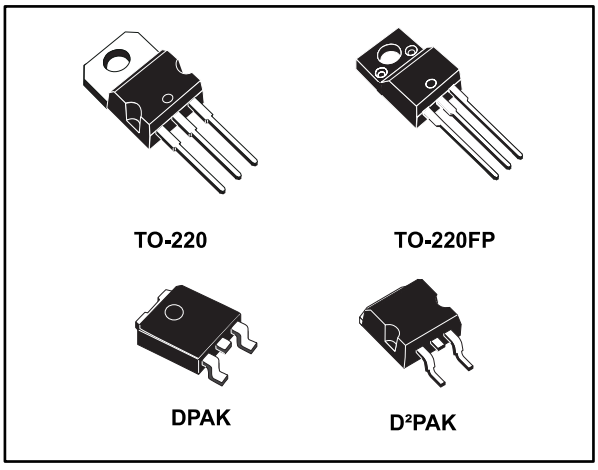

Features

- Output current up to 1.5 A
- Output voltages of 5; 6; 8; 8.5; 9; 12; 15; 18; 24 V
- Thermal overload protection
- Short circuit protection
- Output transition SOA protection
- 2 % output voltage tolerance (A version)
- Guaranteed in extended temperature range (A version)

Description

The L78 series of three-terminal positive regulators is available in TO-220, TO-220FP, D²PAK and DPAK packages and several fixed output voltages, making it useful in a wide range of applications.

These regulators can provide local on-card regulation, eliminating the distribution problems associated with single point regulation. Each type embeds internal current limiting, thermal shut-down and safe area protection, making it essentially indestructible. If adequate heat sinking is provided, they can deliver over 1 A output current. Although designed primarily as fixed voltage regulators, these devices can be used with external components to obtain adjustable voltage and currents.

This is information on a product in full production. www.st.com

sales@prom-elec.com / ООО ПРОМЭЛЕКТРОНИКА

Contents

1 Diagram 3

2 Pin configuration 4

3 Maximum ratings 5

4 Test circuits 6

5 Electrical characteristics 7

6 Application information 23

6.1 Design consideration 23

7 Typical performance 31

8 Package information 33

8.1 TO-220 (dual gauge) package information 34

8.2 TO-220 (single gauge) package information 36

8.3 TO-220FP package information 38

8.4 TO-220 packing information 40

8.5 DPAK package information 41

8.6 D²PAK (SMD 2L STD-ST) type A package information 44

8.7 D²PAK (SMD 2L Wooseok-subcon.) package information 46

8.8 D²PAK and DPAK packing information 49

9 Ordering information 52

10 Revision history 53

1 Diagram

Figure 1: Block diagram

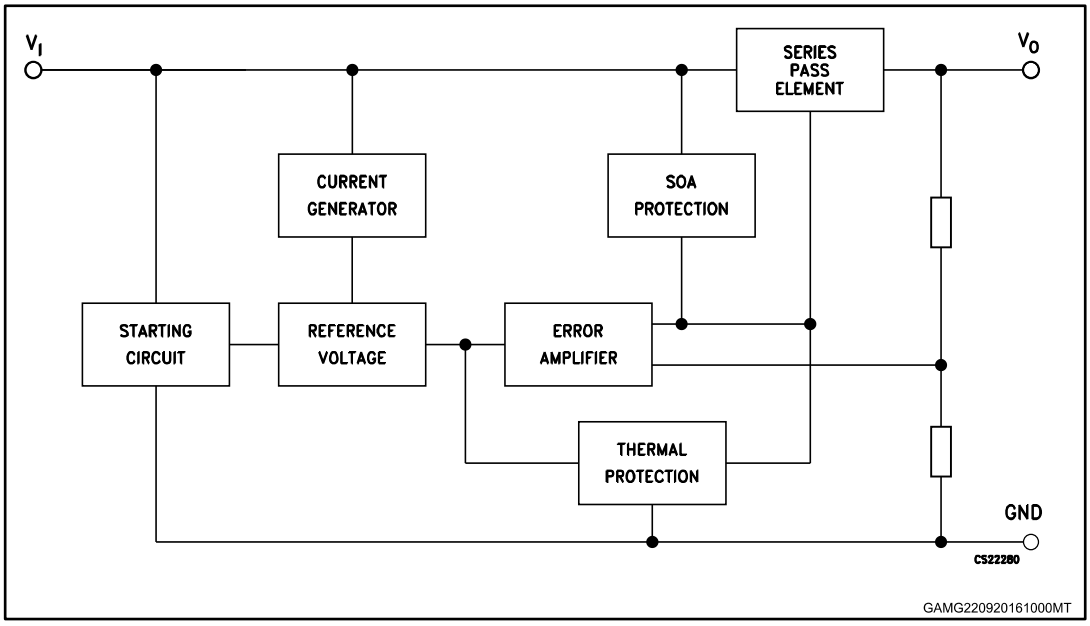

2 Pin configuration

Figure 2: Pin connections (top view)

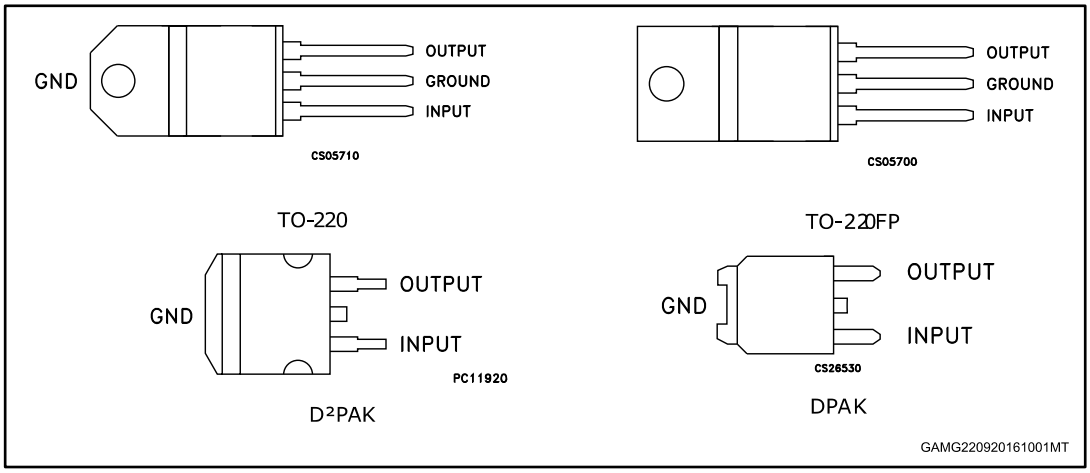

Figure 3: Schematic diagram

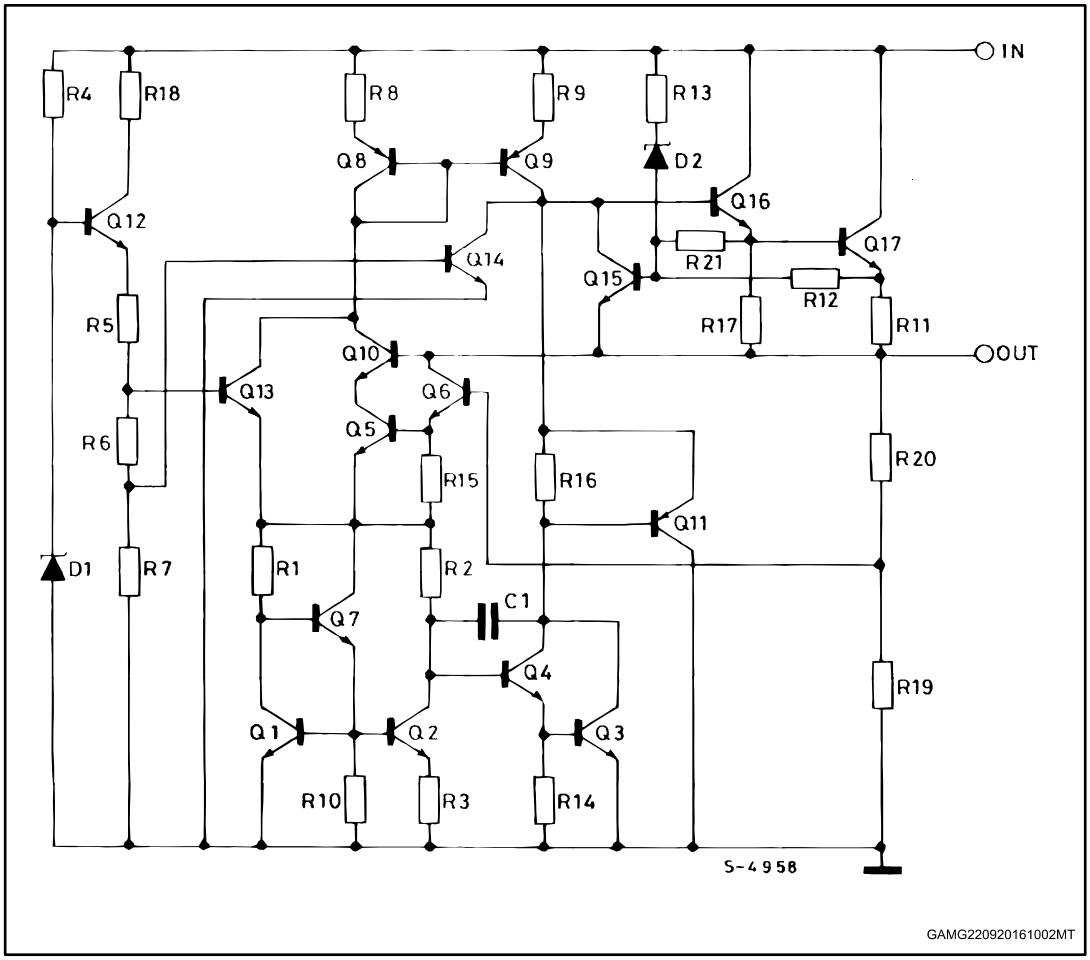

3 Maximum ratings

Table 1: Absolute maximum ratings

Symbol	Parameter		Value	Unit
V_I	DC input voltage	for V_O= 5 to 18 V	35	V
		for V_O= 20, 24 V	40	
I_O	Output current		Internally limited	
P_D	Power dissipation		Internally limited	
T_{STG}	Storage temperature range		-65 to 150	°C
T_{OP}	Operating junction temperature range	for L78xxC, L78xxAC	0 to 125	°C
		for L78xxAB	-40 to 125	

Absolute maximum ratings are those values beyond which damage to the device may occur. Functional operation under these condition is not implied.

Table 2: Thermal data

Symbol	Parameter	D²PAK	DPAK	TO-220	TO-220FP	Unit
R_{thJC}	Thermal resistance junction-case	3	8	5	5	°C/W
R_{thJA}	Thermal resistance junction-ambient	62.5	100	50	60	°C/W

Figure 4: Application circuits

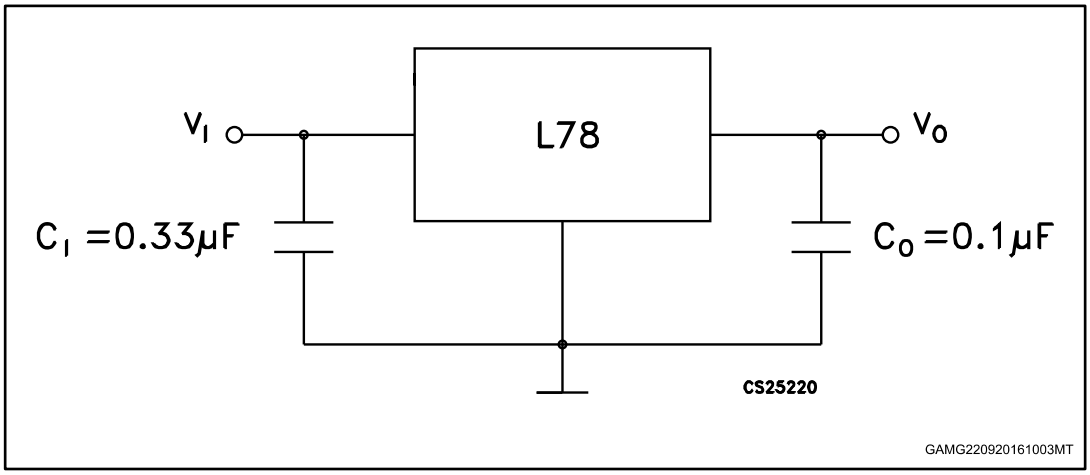

4 Test circuits

Figure 5: DC parameter

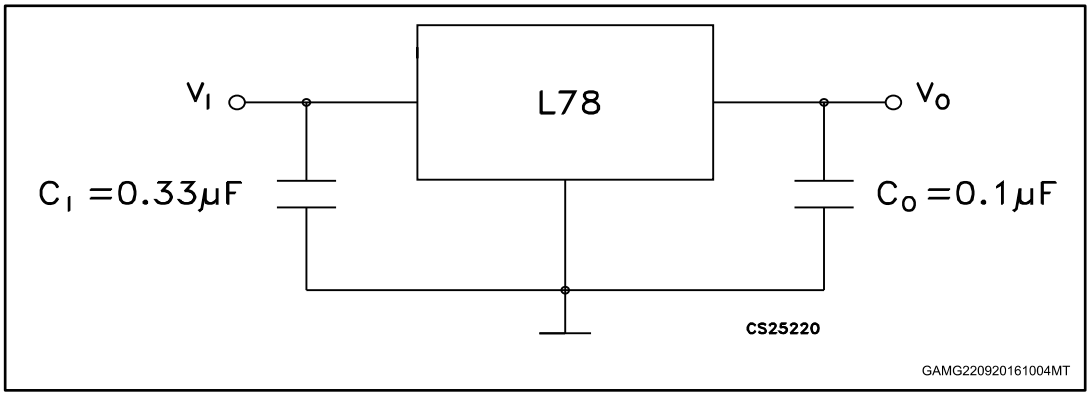

Figure 6: Load regulation

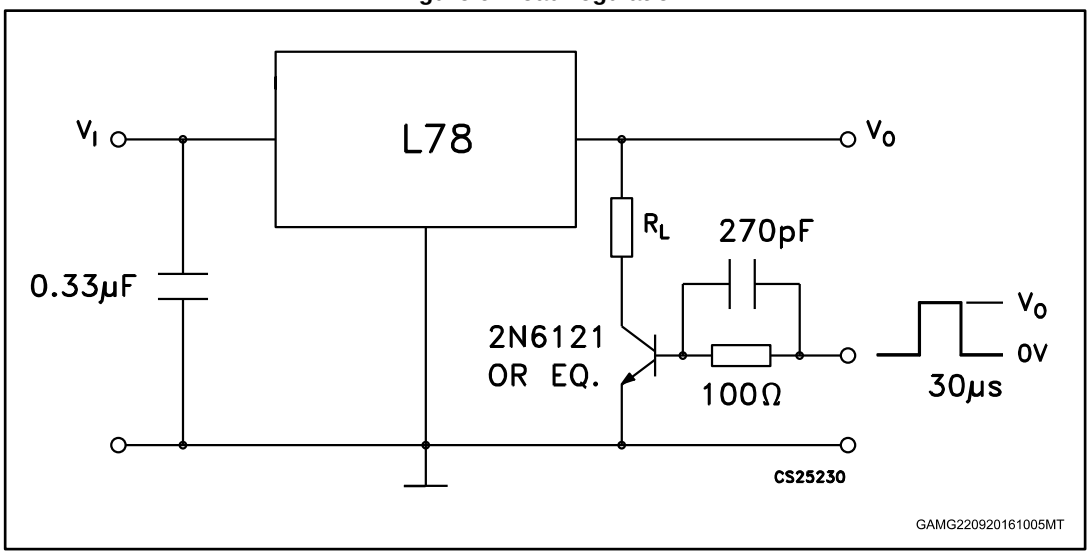

Figure 7: Ripple rejection

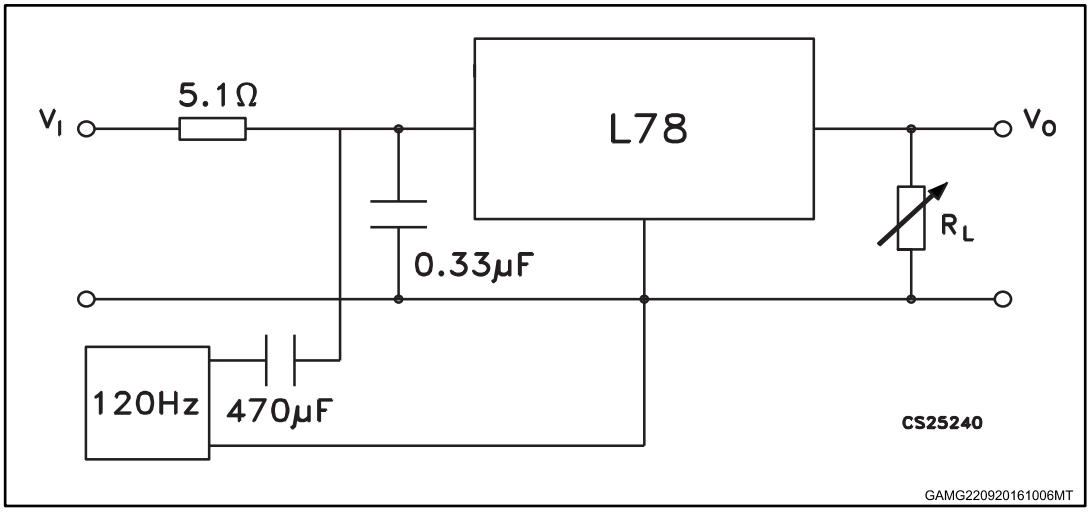

5 Electrical characteristics

V_I = 10 V, I_O = 1 A, T_J = 0 to 125 °C (L7805AC), T_J = -40 to 125 °C (L7805AB), unless otherwise specified[a]

Table 3: Electrical characteristics of L7805A

Symbol	Parameter	Test conditions	Min.	Typ.	Max.	Unit
V_O	Output voltage	T_J = 25 °C	4.9	5	5.1	V
V_O	Output voltage	I_O = 5 mA to 1 A, V_I = 7.5 to 18 V	4.8	5	5.2	V
V_O	Output voltage	I_O = 1 A, V_I = 18 to 20 V, T_J = 25 °C	4.8	5	5.2	V
ΔV_O (1)	Line regulation	V_I = 7.5 to 25 V, I_O = 500 mA, T_J = 25 °C		7	50	mV
		V_I = 8 to 12 V		10	50	mV
		V_I = 8 to 12 V, T_J = 25 °C		2	25	mV
		V_I = 7.3 to 20 V, T_J = 25 °C		7	50	mV
ΔV_O (1)	Load regulation	I_O = 5 mA to 1 A		25	100	mV
		I_O = 5 mA to 1.5 A, T_J = 25 °C		30	100	
		I_O = 250 to 750 mA		8	50	
I_q	Quiescent current	T_J = 25 °C		4.3	6	mA
					6	mA
ΔI_q	Quiescent current change	V_I = 8 to 23 V, I_O = 500 mA			0.8	mA
		V_I = 7.5 to 20 V, T_J = 25 °C			0.8	mA
		I_O = 5 mA to 1 A			0.5	mA
SVR	Supply voltage rejection	V_I = 8 to 18 V, f = 120 Hz, I_O = 500 mA		68		dB
V_d	Dropout voltage	I_O = 1 A, T_J = 25 °C		2		V
eN	Output noise voltage	T_A = 25 °C, B =10 Hz to 100 kHz		10		µV/V_O
R_O	Output resistance	f = 1 kHz		17		mΩ
I_{sc}	Short circuit current	V_I = 35 V, T_A = 25 °C		0.2		A
I_{scp}	Short circuit peak current	T_J = 25 °C		2.2		A
$\Delta V_O/\Delta T$	Output voltage drift			-1.1		mV/°C

Notes:

(1)Load and line regulation are specified at constant junction temperature. Changes in V_O due to heating effects must be taken into account separately. Pulse testing with low duty cycle is used.

[a] Minimum load current for regulation is 5 mA.

V_I = 11 V, I_O = 1 A, T_J = 0 to 125 °C (L7806AC), T_J = -40 to 125 °C (L7806AB), unless otherwise specified[a]

Table 4: Electrical characteristics of L7806A

Symbol	Parameter	Test conditions	Min.	Typ.	Max.	Unit
V_O	Output voltage	T_J = 25 °C	5.88	6	6.12	V
V_O	Output voltage	I_O = 5 mA to 1 A, V_I = 8.6 to 19 V	5.76	6	6.24	V
V_O	Output voltage	I_O = 1 A, V_I = 19 to 21 V, T_J = 25 °C	5.76	6	6.24	V
ΔV_O (1)	Line regulation	V_I = 8.6 to 25 V, I_O = 500 mA, T_J = 25 °C		9	60	mV
		V_I = 9 to 13 V		11	60	mV
		V_I = 9 to 13 V, T_J = 25 °C		3	30	mV
		V_I = 8.3 to 21 V, T_J = 25 °C		9	60	mV
ΔV_O (1)	Load regulation	I_O = 5 mA to 1 A		25	100	mV
		I_O = 5 mA to 1.5 A, T_J = 25 °C		30	100	
		I_O = 250 to 750 mA		10	50	
I_q	Quiescent current	T_J = 25° C		4.3	6	mA
					6	mA
ΔI_q	Quiescent current change	V_I = 9 to 24 V, I_O = 500 mA			0.8	mA
		V_I = 8.6 to 21 V, T_J = 25 °C			0.8	mA
		I_O = 5 mA to 1 A			0.5	mA
SVR	Supply voltage rejection	V_I = 9 to 19 V, f = 120 Hz, I_O = 500 mA		65		dB
V_d	Dropout voltage	I_O = 1 A, T_J = 25 °C		2		V
eN	Output noise voltage	T_A = 25 °C, B =10 Hz to 100 kHz		10		µV/V_O
R_O	Output resistance	f = 1 kHz		17		mΩ
I_{sc}	Short circuit current	V_I = 35 V, T_A = 25 °C		0.2		A
I_{scp}	Short circuit peak current	T_J = 25 °C		2.2		A
$\Delta V_O/\Delta T$	Output voltage drift			-0.8		mV/°C

Notes:

(1)Load and line regulation are specified at constant junction temperature. Changes in V_O due to heating effects must be taken into account separately. Pulse testing with low duty cycle is used.

[a] Minimum load current for regulation is 5 mA.

V_I = 14 V, I_O = 1 A, T_J = 0 to 125 °C (L7808AC), T_J = -40 to 125 °C (L7808AB), unless otherwise specified[a]

Table 5: Electrical characteristics of L7808A

Symbol	Parameter	Test conditions	Min.	Typ.	Max.	Unit
V_O	Output voltage	T_J = 25 °C	7.84	8	8.16	V
V_O	Output voltage	I_O = 5 mA to 1 A, V_I = 10.6 to 21 V	7.7	8	8.3	V
V_O	Output voltage	I_O = 1 A, V_I = 21 to 23 V, T_J = 25 °C	7.7	8	8.3	V
ΔV_O (1)	Line regulation	V_I = 10.6 to 25 V, I_O = 500 mA, T_J = 25 °C		12	80	mV
		V_I = 11 to 17 V		15	80	mV
		V_I = 11 to 17 V, T_J = 25 °C		5	40	mV
		V_I = 10.4 to 23 V, T_J = 25 °C		12	80	mV
ΔV_O (1)	Load regulation	I_O = 5 mA to 1 A		25	100	mV
		I_O = 5 mA to 1.5 A, T_J = 25 °C		30	100	
		I_O = 250 to 750 mA		10	50	
I_q	Quiescent current	T_J = 25 °C		4.3	6	mA
					6	mA
ΔI_q	Quiescent current change	V_I = 11 to 23 V, I_O = 500 mA			0.8	mA
		V_I = 10.6 to 23 V, T_J = 25 °C			0.8	mA
		I_O = 5 mA to 1 A			0.5	mA
SVR	Supply voltage rejection	V_I = 11.5 to 21.5 V, f = 120 Hz, I_O = 500 mA		62		dB
V_d	Dropout voltage	I_O = 1 A, T_J = 25 °C		2		V
eN	Output noise voltage	T_A = 25 °C, B =10 Hz to 100 kHz		10		µV/V_O
R_O	Output resistance	f = 1 kHz		18		mΩ
I_{sc}	Short circuit current	V_I = 35 V, T_A = 25 °C		0.2		A
I_{scp}	Short circuit peak current	T_J = 25 °C		2.2		A
$\Delta V_O/\Delta T$	Output voltage drift			-0.8		mV/°C

Notes:

(1)Load and line regulation are specified at constant junction temperature. Changes in V_O due to heating effects must be taken into account separately. Pulse testing with low duty cycle is used.

[a] Minimum load current for regulation is 5 mA.

V_I = 15 V, I_O = 1 A, T_J = 0 to 125 °C (L7809AC), T_J = -40 to 125 °C (L7809AB), unless otherwise specified[a]

Table 6: Electrical characteristics of L7809A

Symbol	Parameter	Test conditions	Min.	Typ.	Max.	Unit
V_O	Output voltage	T_J = 25 °C	8.82	9	9.18	V
V_O	Output voltage	I_O = 5 mA to 1 A, V_I = 10.6 to 22 V	8.65	9	9.35	V
V_O	Output voltage	I_O = 1 A, V_I = 22 to 24 V, T_J = 25 °C	8.65	9	9.35	V
ΔV_O (1)	Line regulation	V_I = 10.6 to 25 V, I_O = 500 mA, T_J = 25 °C		12	90	mV
		V_I = 11 to 17 V		15	90	mV
		V_I = 11 to 17 V, T_J = 25 °C		5	45	mV
		V_I = 11.4 to 23 V, T_J = 25 °C		12	90	mV
ΔV_O (1)	Load regulation	I_O = 5 mA to 1 A		25	100	mV
		I_O = 5 mA to 1.5 A, T_J = 25 °C		30	100	
		I_O = 250 to 750 mA		10	50	
I_q	Quiescent current	T_J = 25 °C		4.3	6	mA
					6	mA
ΔI_q	Quiescent current change	V_I = 11 to 25 V, I_O = 500 mA			0.8	mA
		V_I = 10.6 to 23 V, T_J = 25 °C			0.8	mA
		I_O = 5 mA to 1 A			0.5	mA
SVR	Supply voltage rejection	V_I = 11.5 to 21.5 V, f = 120 Hz, I_O = 500 mA		61		dB
V_d	Dropout voltage	I_O = 1 A, T_J = 25 °C		2		V
eN	Output noise voltage	T_A = 25 °C, B =10 Hz to 100 kHz		10		µV/V_O
R_O	Output resistance	f = 1 kHz		18		mΩ
I_{sc}	Short circuit current	V_I = 35 V, T_A = 25 °C		0.2		A
I_{scp}	Short circuit peak current	T_J = 25 °C		2.2		A
$\Delta V_O/\Delta T$	Output voltage drift			-0.8		mV/°C

Notes:

(1)Load and line regulation are specified at constant junction temperature. Changes in V_O due to heating effects must be taken into account separately. Pulse testing with low duty cycle is used.

[a] Minimum load current for regulation is 5 mA.

V_I = 19 V, I_O = 1 A, T_J = 0 to 125 °C (L7812AC), T_J = -40 to 125 °C (L7812AB), unless otherwise specified[a]

Table 7: Electrical characteristics of L7812A

Symbol	Parameter	Test conditions	Min.	Typ.	Max.	Unit
V_O	Output voltage	T_J = 25 °C	11.75	12	12.25	V
V_O	Output voltage	I_O = 5 mA to 1 A, V_I = 14.8 to 25 V	11.5	12	12.5	V
V_O	Output voltage	I_O = 1 A, V_I = 25 to 27 V, T_J = 25 °C	11.5	12	12.5	V
ΔV_O (1)	Line regulation	V_I = 14.8 to 30 V, I_O = 500 mA, T_J = 25 °C		13	120	mV
		V_I = 16 to 12 V		16	120	mV
		V_I = 16 to 12 V, T_J = 25 °C		6	60	mV
		V_I = 14.5 to 27 V, T_J = 25 °C		13	120	mV
ΔV_O (1)	Load regulation	I_O = 5 mA to 1 A		25	100	mV
		I_O = 5 mA to 1.5 A, T_J = 25 °C		30	100	
		I_O = 250 to 750 mA		10	50	
I_q	Quiescent current	T_J = 25 °C		4.4	6	mA
					6	mA
DI_q	Quiescent current change	V_I = 15 to 30 V, I_O = 500 mA			0.8	mA
		V_I = 14.8 to 27 V, T_J = 25 °C			0.8	mA
		I_O = 5 mA to 1 A			0.5	mA
SVR	Supply voltage rejection	V_I = 15 to 25 V, f = 120 Hz, I_O = 500 mA		60		dB
V_d	Dropout voltage	I_O = 1 A, T_J = 25 °C		2		V
eN	Output noise voltage	T_A = 25 °C, B = 10 Hz to 100 kHz		10		µV/V_O
R_O	Output resistance	f = 1 kHz		18		mΩ
I_{sc}	Short circuit current	V_I = 35 V, T_A = 25 °C		0.2		A
I_{scp}	Short circuit peak current	T_J = 25 °C		2.2		A
$\Delta V_O/\Delta T$	Output voltage drift			-1		mV/°C

Notes:

(1)Load and line regulation are specified at constant junction temperature. Changes in V_O due to heating effects must be taken into account separately. Pulse testing with low duty cycle is used.

[a] Minimum load current for regulation is 5 mA.

V_I = 23 V, I_O = 1 A, T_J = 0 to 125 °C (L7815AC), T_J = -40 to 125 °C (L7815AB), unless otherwise specified[a]

Table 8: Electrical characteristics of L7815A

Symbol	Parameter	Test conditions	Min.	Typ.	Max.	Unit
V_O	Output voltage	T_J = 25 °C	14.7	15	15.3	V
V_O	Output voltage	I_O = 5 mA to 1 A, V_I = 17.9 to 28 V	14.4	15	15.6	V
V_O	Output voltage	I_O = 1 A, V_I = 28 to 30 V, T_J = 25 °C	14.4	15	15.6	V
ΔV_O (1)	Line regulation	V_I = 17.9 to 30 V, I_O = 500 mA, T_J = 25 °C		13	150	mV
		V_I = 20 to 26 V		16	150	mV
		V_I = 20 to 26 V, T_J = 25 °C		6	75	mV
		V_I = 17.5 to 30 V, T_J = 25 °C		13	150	mV
ΔV_O (1)	Load regulation	I_O = 5 mA to 1 A		25	100	mV
		I_O = 5 mA to 1.5 A, T_J = 25 °C		30	100	
		I_O = 250 to 750 mA		10	50	
I_q	Quiescent current	T_J = 25 °C		4.4	6	mA
					6	mA
ΔI_q	Quiescent current change	V_I = 17.5 to 30 V, I_O = 500 mA			0.8	mA
		V_I = 17.5 to 30 V, T_J = 25 °C			0.8	mA
		I_O = 5 mA to 1 A			0.5	mA
SVR	Supply voltage rejection	V_I = 18.5 to 28.5 V, f = 120 Hz, I_O = 500 mA		58		dB
V_d	Dropout voltage	I_O = 1 A, T_J = 25 °C		2		V
eN	Output noise voltage	T_A = 25 °C, B = 10Hz to 100 kHz		10		µV/V_O
R_O	Output resistance	f = 1 kHz		19		mΩ
I_{sc}	Short circuit current	V_I = 35 V, T_A = 25 °C		0.2		A
I_{scp}	Short circuit peak current	T_J = 25 °C		2.2		A
$\Delta V_O/\Delta T$	Output voltage drift			-1		mV/°C

Notes:

(1)Load and line regulation are specified at constant junction temperature. Changes in V_O due to heating effects must be taken into account separately. Pulse testing with low duty cycle is used.

[a] Minimum load current for regulation is 5 mA.

V_I = 33 V, I_O = 1 A, T_J = 0 to 125 °C (L7824AC), T_J = -40 to 125 °C (L7824AB), unless otherwise specified[a]

Table 9: Electrical characteristics of L7824A

Symbol	Parameter	Test conditions	Min.	Typ.	Max.	Unit
V_O	Output voltage	T_J = 25 °C	23.5	24	24.5	V
V_O	Output voltage	I_O = 5 mA to 1 A, V_I = 27.3 to 37 V	23	24	25	V
V_O	Output voltage	I_O = 1 A, V_I = 37 to 38 V, T_J = 25 °C	23	24	25	V
ΔV_O (1)	Line regulation	V_I = 27 to 38 V, I_O = 500 mA, T_J = 25 °C		31	240	mV
		V_I = 30 to 36 V		35	200	mV
		V_I = 30 to 36 V, T_J = 25 °C		14	120	mV
		V_I = 26.7 to 38 V, T_J = 25 °C		31	240	mV
ΔV_O (1)	Load regulation	I_O = 5 mA to 1 A		25	100	mV
		I_O = 5 mA to 1.5 A, T_J = 25 °C		30	100	
		I_O = 250 to 750 mA		10	50	
I_q	Quiescent current	T_J = 25 °C		4.6	6	mA
					6	mA
ΔI_q	Quiescent current change	V_I = 27.3 to 38 V, I_O = 500 mA			0.8	mA
		V_I = 27.3 to 38 V, T_J = 25 °C			0.8	mA
		I_O = 5 mA to 1 A			0.5	mA
SVR	Supply voltage rejection	V_I = 28 to 38 V, f = 120 Hz, I_O = 500 mA		54		dB
V_d	Dropout voltage	I_O = 1 A, T_J = 25 °C		2		V
eN	Output noise voltage	T_A = 25 °C, B = 10 Hz to 100 kHz		10		µV/V_O
R_O	Output resistance	f = 1 kHz		20		m
I_{sc}	Short circuit current	V_I = 35 V, T_A = 25 °C		0.2		A
I_{scp}	Short circuit peak current	T_J = 25 °C		2.2		A
$\Delta V_O/\Delta T$	Output voltage drift			-1.5		mV/°C

Notes:

(1)Load and line regulation are specified at constant junction temperature. Changes in V_O due to heating effects must be taken into account separately. Pulse testing with low duty cycle is used.

[a] Minimum load current for regulation is 5 mA.

Refer to the test circuits, T_J = 0 to 125 °C, V_I = 10 V, I_O = 500 mA, C_I = 0.33 µF, C_O = 0.1 µF unless otherwise specified[a]

Table 10: Electrical characteristics of L7805C

Symbol	Parameter	Test conditions	Min.	Typ.	Max.	Unit
V_O	Output voltage	T_J = 25 °C	4.8	5	5.2	V
V_O	Output voltage	I_O = 5 mA to 1 A, V_I = 7 to 18 V	4.75	5	5.25	V
V_O	Output voltage	I_O = 1 A, V_I = 18 to 20V, T_J = 25 °C	4.75	5	5.25	V
ΔV_O(1)	Line regulation	V_I = 7 to 25 V, T_J = 25 °C		3	100	mV
		V_I = 8 to 12 V, T_J = 25 °C		1	50	
ΔV_O(1)	Load regulation	I_O = 5 mA to 1.5 A, T_J = 25 °C			100	mV
		I_O = 250 to 750 mA, T_J = 25 °C			50	
I_d	Quiescent current	T_J = 25° C			8	mA
ΔI_d	Quiescent current change	I_O = 5 mA to 1 A			0.5	mA
		V_I = 7 to 23 V			0.8	
$\Delta V_O/\Delta T$	Output voltage drift	I_O = 5 mA		-1.1		mV/°C
eN	Output noise voltage	B = 10 Hz to 100 kHz, T_J = 25 °C		40		µV/V_O
SVR	Supply voltage rejection	V_I = 8 to 18 V, f = 120 Hz	62			dB
V_d	Dropout voltage	I_O = 1 A, T_J = 25 °C		2		V
R_O	Output resistance	f = 1 kHz		17		mΩ
I_{sc}	Short circuit current	V_I = 35 V, T_J = 25 °C		0.75		A
I_{scp}	Short circuit peak current	T_J = 25 °C		2.2		A

Notes:

(1)Load and line regulation are specified at constant junction temperature. Changes in V_O due to heating effects must be taken into account separately. Pulse testing with low duty cycle is used.

[a] Minimum load current for regulation is 5 mA.

Refer to the test circuits, T_J = 0 to 125 °C, V_I = 11 V, I_O = 500 mA, C_I = 0.33 µF, C_O = 0.1 µF unless otherwise specified[a]

Table 11: Electrical characteristics of L7806C

Symbol	Parameter	Test conditions	Min.	Typ.	Max.	Unit
V_O	Output voltage	T_J = 25 °C	5.75	6	6.25	V
V_O	Output voltage	I_O = 5 mA to 1 A, V_I = 8 to 19 V	5.7	6	6.3	V
V_O	Output voltage	I_O = 1 A, V_I = 19 to 21 V, T_J = 25 °C	5.7	6	6.3	V
ΔV_O(1)	Line regulation	V_I = 8 to 25 V, T_J = 25 °C			120	mV
		V_I = 9 to 13 V, T_J = 25 °C			60	
ΔV_O(1)	Load regulation	I_O = 5 mA to 1.5 A, T_J = 25 °C			120	mV
		I_O = 250 to 750 mA, T_J = 25 °C			60	
I_d	Quiescent current	T_J = 25 °C			8	mA
DI_d	Quiescent current change	I_O = 5 mA to 1 A			0.5	mA
		V_I = 8 to 24 V			1.3	
$\Delta V_O/\Delta T$	Output voltage drift	I_O = 5 mA		-0.8		mV/°C
eN	Output noise voltage	B = 10 Hz to 100 kHz, T_J = 25 °C		45		µV/V_O
SVR	Supply voltage rejection	V_I = 9 to 19 V, f = 120 Hz	59			dB
V_d	Dropout voltage	I_O = 1 A, T_J = 25 °C		2		V
R_O	Output resistance	f = 1 kHz		19		mΩ
I_{sc}	Short circuit current	V_I = 35 V, T_J = 25 °C		0.55		A
I_{scp}	Short circuit peak current	T_J = 25 °C		2.2		A

Notes:

(1)Load and line regulation are specified at constant junction temperature. Changes in V_O due to heating effects must be taken into account separately. Pulse testing with low duty cycle is used.

[a] Minimum load current for regulation is 5 mA.

Refer to the test circuits, T_J = 0 to 125 °C, V_I = 14 V, I_O = 500 mA, C_I = 0.33 µF, C_O = 0.1 µF unless otherwise specified[a]

Table 12: Electrical characteristics of L7808C

Symbol	Parameter	Test conditions	Min.	Typ.	Max.	Unit
V_O	Output voltage	T_J = 25 °C	7.7	8	8.3	V
V_O	Output voltage	I_O = 5 mA to 1 A, V_I = 10.5 to 21 V	7.6	8	8.4	V
V_O	Output voltage	I_O = 1 A, V_I = 21 to 25 V, T_J = 25 °C	7.6	8	8.4	V
ΔV_O(1)	Line regulation	V_I = 10.5 to 25 V, T_J = 25 °C			160	mV
		V_I = 11 to 17 V, T_J = 25 °C			80	
ΔV_O(1)	Load regulation	I_O = 5 mA to 1.5 A, T_J = 25 °C			160	mV
		I_O = 250 to 750 mA, T_J = 25 °C			80	
I_d	Quiescent current	T_J = 25 °C			8	mA
ΔI_d	Quiescent current change	I_O = 5 mA to 1 A			0.5	mA
		V_I = 10.5 to 25 V			1	
$\Delta V_O/\Delta T$	Output voltage drift	I_O = 5 mA		-0.8		mV/°C
eN	Output noise voltage	B = 10 Hz to 100 kHz, T_J = 25 °C		52		µV/V_O
SVR	Supply voltage rejection	V_I = 11.5 to 21.5 V, f = 120 Hz	56			dB
V_d	Dropout voltage	I_O = 1 A, T_J = 25 °C		2		V
R_O	Output resistance	f = 1 kHz		16		mΩ
I_{sc}	Short circuit current	V_I = 35 V, T_J = 25 °C		0.45		A
I_{scp}	Short circuit peak current	T_J = 25 °C		2.2		A

Notes:

(1)Load and line regulation are specified at constant junction temperature. Changes in V_O due to heating effects must be taken into account separately. Pulse testing with low duty cycle is used.

[a] Minimum load current for regulation is 5 mA.

Refer to the test circuits, T_J = 0 to 125 °C, V_I = 14.5 V, I_O = 500 mA, C_I = 0.33 µF, C_O = 0.1 µF unless otherwise specified[a]

Table 13: Electrical characteristics of L7885C

Symbol	Parameter	Test conditions	Min.	Typ.	Max.	Unit
V_O	Output voltage	T_J = 25 °C	8.2	8.5	8.8	V
V_O	Output voltage	I_O = 5 mA to 1 A, V_I = 11 to 21.5 V	8.1	8.5	8.9	V
V_O	Output voltage	I_O = 1 A, V_I = 21.5 to 26 V, T_J = 25 °C	8.1	8.5	8.9	V
ΔV_O(1)	Line regulation	V_I = 11 to 27 V, T_J = 25 °C			160	mV
		V_I = 11.5 to 17.5 V, T_J = 25 °C			80	
ΔV_O(1)	Load regulation	I_O = 5 mA to 1.5 A, T_J = 25 °C			160	mV
		I_O = 250 to 750 mA, T_J = 25 °C			80	
I_d	Quiescent current	T_J = 25 °C			8	mA
ΔI_d	Quiescent current change	I_O = 5 mA to 1 A			0.5	mA
		V_I = 11 to 26 V			1	
$\Delta V_O/\Delta T$	Output voltage drift	I_O = 5 mA		-0.8		mV/°C
eN	Output noise voltage	B = 10 Hz to 100 kHz, T_J = 25 °C		55		µV/V_O
SVR	Supply voltage rejection	V_I = 12 to 22 V, f = 120 Hz	56			dB
V_d	Dropout voltage	I_O = 1 A, T_J = 25 °C		2		V
R_O	Output resistance	f = 1 kHz		16		mΩ
I_{sc}	Short circuit current	V_I = 35 V, T_J = 25 °C		0.45		A
I_{scp}	Short circuit peak current	T_J = 25 °C		2.2		A

Notes:

(1)Load and line regulation are specified at constant junction temperature. Changes in V_O due to heating effects must be taken into account separately. Pulse testing with low duty cycle is used.

[a] Minimum load current for regulation is 5 mA.

Refer to the test circuits, T_J = 0 to 125 °C, V_I = 15 V, I_O = 500 mA, C_I = 0.33 µF, C_O = 0.1 µF unless otherwise specified[a]

Table 14: Electrical characteristics of L7809C

Symbol	Parameter	Test conditions	Min.	Typ.	Max.	Unit
V_O	Output voltage	T_J = 25 °C	8.64	9	9.36	V
V_O	Output voltage	I_O = 5 mA to 1 A, V_I = 11.5 to 22 V	8.55	9	9.45	V
V_O	Output voltage	I_O = 1 A, V_I = 22 to 26 V, T_J = 25 °C	8.55	9	9.45	V
ΔV_O(1)	Line regulation	V_I = 11.5 to 26 V, T_J = 25 °C			180	mV
		V_I = 12 to 18 V, T_J = 25 °C			90	
ΔV_O(1)	Load regulation	I_O = 5 mA to 1.5 A, T_J = 25 °C			180	mV
		I_O = 250 to 750 mA, T_J = 25 °C			90	
I_d	Quiescent current	T_J = 25 °C			8	mA
ΔI_d	Quiescent current change	I_O = 5 mA to 1 A			0.5	mA
		V_I = 11.5 to 26 V			1	
$\Delta V_O/\Delta T$	Output voltage drift	I_O = 5 mA		-1		mV/°C
eN	Output noise voltage	B = 10 Hz to 100 kHz, T_J = 25 °C		70		µV/V_O
SVR	Supply voltage rejection	V_I = 12 to 23 V, f = 120 Hz	55			dB
V_d	Dropout voltage	I_O = 1 A, T_J = 25 °C		2		V
R_O	Output resistance	f = 1 kHz		17		mΩ
I_{sc}	Short circuit current	V_I = 35 V, T_J = 25 °C		0.40		A
I_{scp}	Short circuit peak current	T_J = 25 °C		2.2		A

Notes:

(1)Load and line regulation are specified at constant junction temperature. Changes in V_O due to heating effects must be taken into account separately. Pulse testing with low duty cycle is used.

[a] Minimum load current for regulation is 5 mA.

Refer to the test circuits, T_J = 0 to 125 °C, V_I = 19 V, I_O = 500 mA, C_I = 0.33 µF, C_O = 0.1 µF unless otherwise specified[a]

Table 15: Electrical characteristics of L7812C

Symbol	Parameter	Test conditions	Min.	Typ.	Max.	Unit
V_O	Output voltage	T_J = 25 °C	11.5	12	12.5	V
V_O	Output voltage	I_O = 5 mA to 1 A, V_I = 14.5 to 25 V	11.4	12	12.6	V
V_O	Output voltage	I_O = 1 A, V_I = 25 to 27 V, T_J = 25 °C	11.4	12	12.6	V
ΔV_O[(1)]	Line regulation	V_I = 14.5 to 30 V, T_J = 25 °C			240	mV
		V_I = 16 to 22 V, T_J = 25 °C			120	
ΔV_O[(1)]	Load regulation	I_O = 5 mA to 1.5 A, T_J = 25 °C			240	mV
		I_O = 250 to 750 mA, T_J = 25 °C			120	
I_d	Quiescent current	T_J = 25 °C			8	mA
ΔI_d	Quiescent current change	I_O = 5 mA to 1 A			0.5	mA
		V_I = 14.5 to 30 V			1	
$\Delta V_O/\Delta T$	Output voltage drift	I_O = 5 mA		-1		mV/°C
eN	Output noise voltage	B = 10 Hz to 100 kHz, T_J = 25 °C		75		µV/V_O
SVR	Supply voltage rejection	V_I = 15 to 25 V, f = 120 Hz	55			dB
V_d	Dropout voltage	I_O = 1 A, T_J = 25 °C		2		V
R_O	Output resistance	f = 1 kHz		18		mΩ
I_{sc}	Short circuit current	V_I = 35 V, T_J = 25 °C		0.35		A
I_{scp}	Short circuit peak current	T_J = 25 °C		2.2		A

Notes:

(1)Load and line regulation are specified at constant junction temperature. Changes in V_O due to heating effects must be taken into account separately. Pulse testing with low duty cycle is used.

[a] Minimum load current for regulation is 5 mA.

Refer to the test circuits, T_J = 0 to 125 °C, V_I = 23 V, I_O = 500 mA, C_I = 0.33 µF, C_O = 0.1 µF unless otherwise specified[a]

Table 16: Electrical characteristics of L7815C

Symbol	Parameter	Test conditions	Min.	Typ.	Max.	Unit
V_O	Output voltage	T_J = 25 °C	14.4	15	15.6	V
V_O	Output voltage	I_O = 5 mA to 1 A, V_I = 17.5 to 28 V	14.25	15	15.75	V
V_O	Output voltage	I_O = 1 A, V_I = 28 to 30 V, T_J = 25 °C	14.25	15	15.75	V
ΔV_O(1)	Line regulation	V_I = 17.5 to 30 V, T_J = 25 °C			300	mV
		V_I = 20 to 26 V, T_J = 25 °C			150	
ΔV_O(1)	Load regulation	I_O = 5 mA to 1.5 A, T_J = 25 °C			300	mV
		I_O = 250 to 750 mA, T_J = 25 °C			150	
I_d	Quiescent current	T_J = 25 °C			8	mA
ΔI_d	Quiescent current change	I_O = 5 mA to 1A			0.5	mA
		V_I = 17.5 to 30 V			1	
$\Delta V_O/\Delta T$	Output voltage drift	I_O = 5 mA		-1		mV/°C
eN	Output noise voltage	B = 10 Hz to 100kHz, T_J = 25 °C		90		µV/V_O
SVR	Supply voltage rejection	V_I = 18.5 to 28.5 V, f = 120 Hz	54			dB
V_d	Dropout voltage	I_O = 1 A, T_J = 25 °C		2		V
R_O	Output resistance	f = 1 kHz		19		mΩ
I_{sc}	Short circuit current	V_I = 35 V, T_J = 25 °C		0.23		A
I_{scp}	Short circuit peak current	T_J = 25 °C		2.2		A

Notes:

(1)Load and line regulation are specified at constant junction temperature. Changes in V_O due to heating effects must be taken into account separately. Pulse testing with low duty cycle is used.

[a] Minimum load current for regulation is 5 mA.

Refer to the test circuits, T_J = 0 to 125 °C, V_I = 26 V, I_O = 500 mA, C_I = 0.33 µF, C_O = 0.1 µF unless otherwise specified[a]

Table 17: Electrical characteristics of L7818C

Symbol	Parameter	Test conditions	Min.	Typ.	Max.	Unit
V_O	Output voltage	T_J = 25 °C	17.3	18	18.7	V
V_O	Output voltage	I_O = 5 mA to 1 A, V_I = 21 to 31 V	17.1	18	18.9	V
V_O	Output voltage	I_O = 1 A, V_I = 31 to 33 V, T_J = 25 °C	17.1	18	18.9	V
ΔV_O(1)	Line regulation	V_I = 21 to 33 V, T_J = 25 °C			360	mV
		V_I = 24 to 30 V, T_J = 25 °C			180	
ΔV_O(1)	Load regulation	I_O = 5 mA to 1.5 A, T_J = 25 °C			360	mV
		I_O = 250 to 750 mA, T_J = 25 °C			180	
I_d	Quiescent current	T_J = 25 °C			8	mA
ΔI_d	Quiescent current change	I_O = 5 mA to 1 A			0.5	mA
		V_I = 21 to 33 V			1	
$\Delta V_O/\Delta T$	Output voltage drift	I_O = 5 mA		-1		mV/°C
eN	Output noise voltage	B = 10 Hz to 100 kHz, T_J = 25 °C		110		µV/V_O
SVR	Supply voltage rejection	V_I = 22 to 32 V, f = 120 Hz	53			dB
V_d	Dropout voltage	I_O = 1 A, T_J = 25 °C		2		V
R_O	Output resistance	f = 1 kHz		22		mΩ
I_{sc}	Short circuit current	V_I = 35 V, T_J = 25 °C		0.20		A
I_{scp}	Short circuit peak current	T_J = 25 °C		2.1		A

Notes:

(1)Load and line regulation are specified at constant junction temperature. Changes in V_O due to heating effects must be taken into account separately. Pulse testing with low duty cycle is used.

[a] Minimum load current for regulation is 5 mA.

Refer to the test circuits, T_J = 0 to 125 °C, V_I = 33 V, I_O = 500 mA, C_I = 0.33 µF, C_O = 0.1 µF unless otherwise specified[a]

Table 18: Electrical characteristics of L7824C

Symbol	Parameter	Test conditions	Min.	Typ.	Max.	Unit
V_O	Output voltage	T_J = 25 °C	23	24	25	V
V_O	Output voltage	I_O = 5 mA to 1 A, V_I = 27 to 37 V	22.8	24	25.2	V
V_O	Output voltage	I_O = 1 A, V_I = 37 to 38 V, T_J = 25 °C	22.8	24	25.2	V
ΔV_O(1)	Line regulation	V_I = 27 to 38 V, T_J = 25 °C			480	mV
		V_I = 30 to 36 V, T_J = 25 °C			240	
ΔV_O(1)	Load regulation	I_O = 5 mA to 1.5 A, T_J = 25 °C			480	mV
		I_O = 250 to 750 mA, T_J = 25 °C			240	
I_d	Quiescent current	T_J = 25 °C			8	mA
ΔI_d	Quiescent current change	I_O = 5 mA to 1 A			0.5	mA
		V_I = 27 to 38 V			1	
$\Delta V_O/\Delta T$	Output voltage drift	I_O = 5 mA		-1.5		mV/°C
eN	Output noise voltage	B = 10 Hz to 100 kHz, T_J = 25 °C		170		µV/V_O
SVR	Supply voltage rejection	V_I = 28 to 38 V, f = 120 Hz	50			dB
V_d	Dropout voltage	I_O = 1 A, T_J = 25 °C		2		V
R_O	Output resistance	f = 1 kHz		28		mΩ
I_{sc}	Short circuit current	V_I = 35 V, T_J = 25° C		0.15		A
I_{scp}	Short circuit peak current	T_J = 25 °C		2.1		A

Notes:

(1)Load and line regulation are specified at constant junction temperature. Changes in V_O due to heating effects must be taken into account separately. Pulse testing with low duty cycle is used.

[a] Minimum load current for regulation is 5 mA.

6 Application information

6.1 Design consideration

The L78 Series of fixed voltage regulators are designed with thermal overload protection that shuts down the circuit when subjected to an excessive power overload condition, internal short-circuit protection that limits the maximum current the circuit will pass, and output transistor safe-area compensation that reduces the output short-circuit current as the voltage across the pass transistor is increased. In many low current applications, compensation capacitors are not required. However, it is recommended that the regulator input be bypassed with capacitor if the regulator is connected to the power supply filter with long lengths, or if the output load capacitance is large. An input bypass capacitor should be selected to provide good high frequency characteristics to insure stable operation under all load conditions. A 0.33 µF or larger tantalum, mylar or other capacitor having low internal impedance at high frequencies should be chosen. The bypass capacitor should be mounted with the shortest possible leads directly across the regulators input terminals. Normally good construction techniques should be used to minimize ground loops and lead resistance drops since the regulator has no external sense lead.

The addition of an operational amplifier allows adjustment to higher or intermediate values while retaining regulation characteristics. The minimum voltage obtained with the arrangement is 2 V greater than the regulator voltage.

The circuit of *Figure 13: "High current voltage regulator"* can be modified to provide supply protection against short circuit by adding a short circuit sense resistor, RSC, and an additional PNP transistor. The current sensing PNP must be able to handle the short circuit current of the three terminal regulator Therefore a four ampere plastic power transistor is specified.

Figure 8: Fixed output regulator

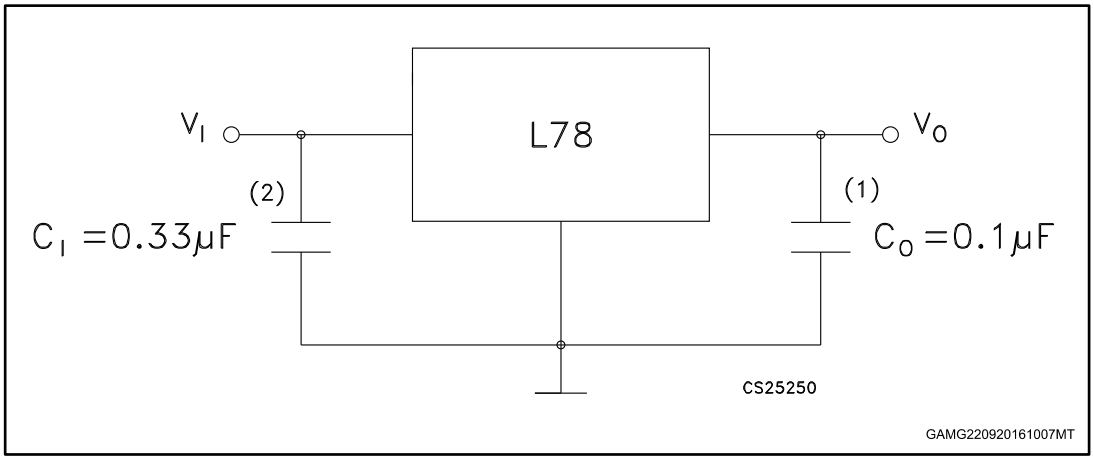

1. Although no output capacitor is need for stability, it does improve transient response.
2. Required if regulator is located an appreciable distance from power supply filter.

Figure 9: Current regulator

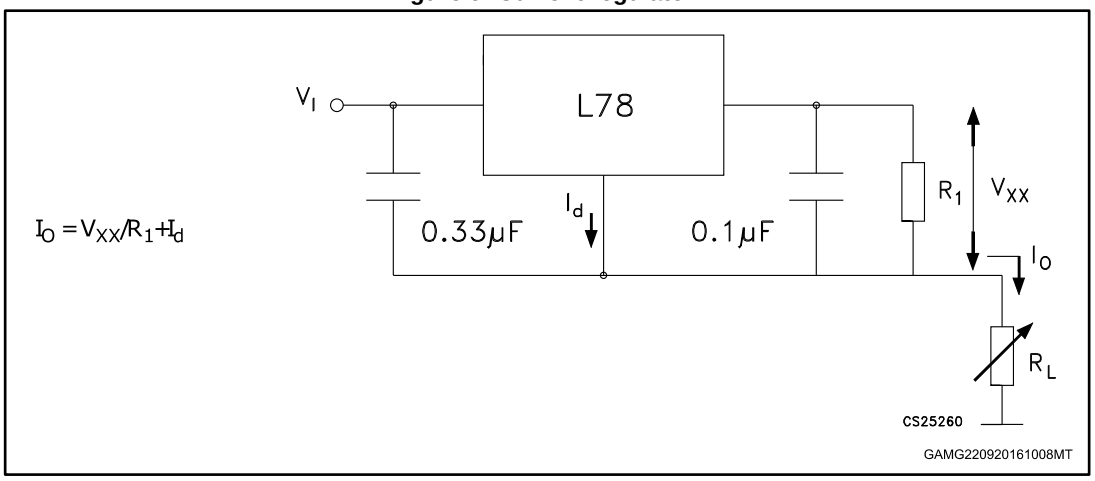

Figure 10: Circuit for increasing output voltage

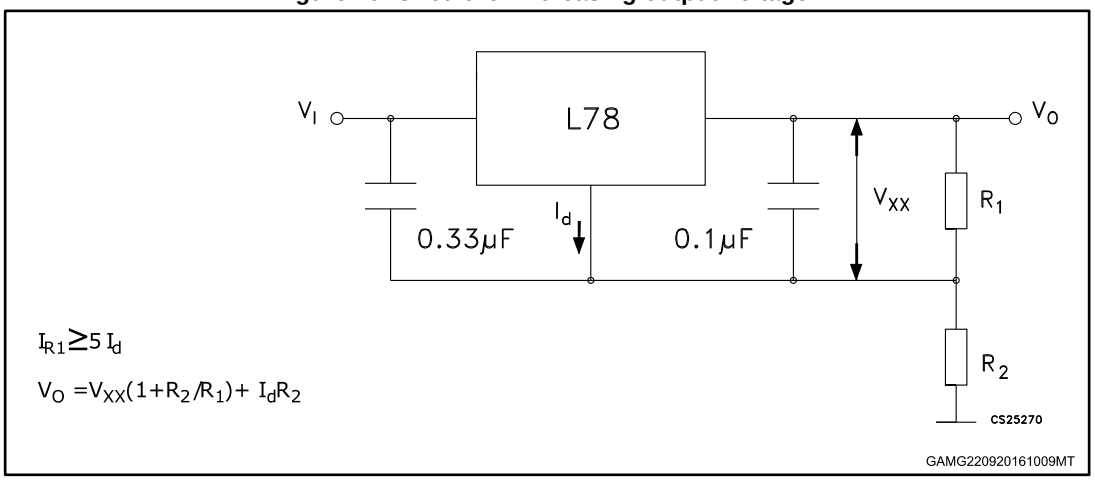

Figure 11: Adjustable output regulator (7 to 30 V)

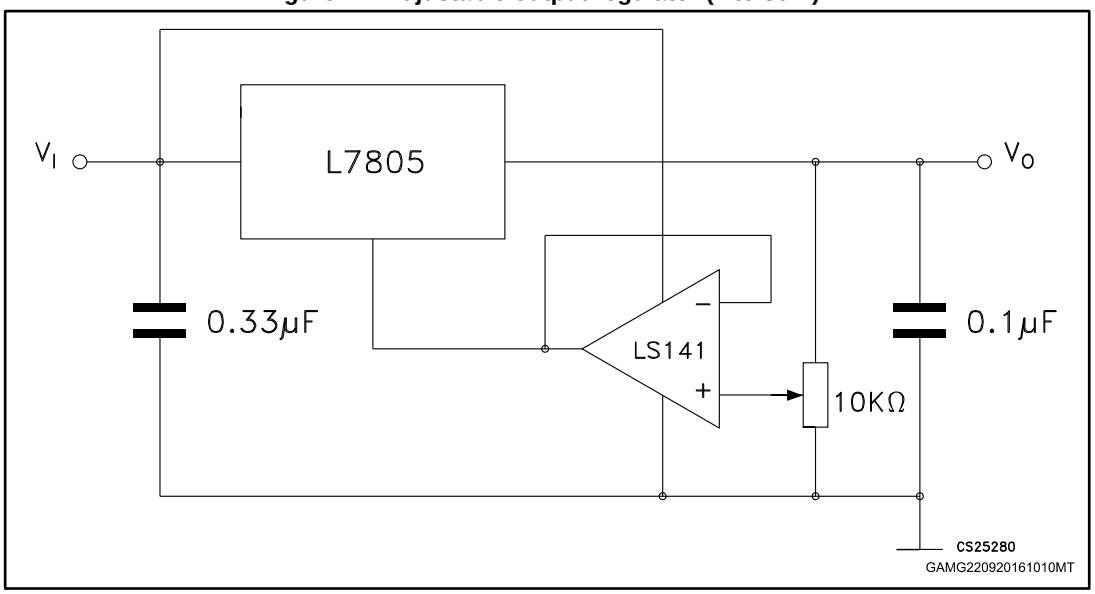

Figure 12: 0.5 to 10 V regulator

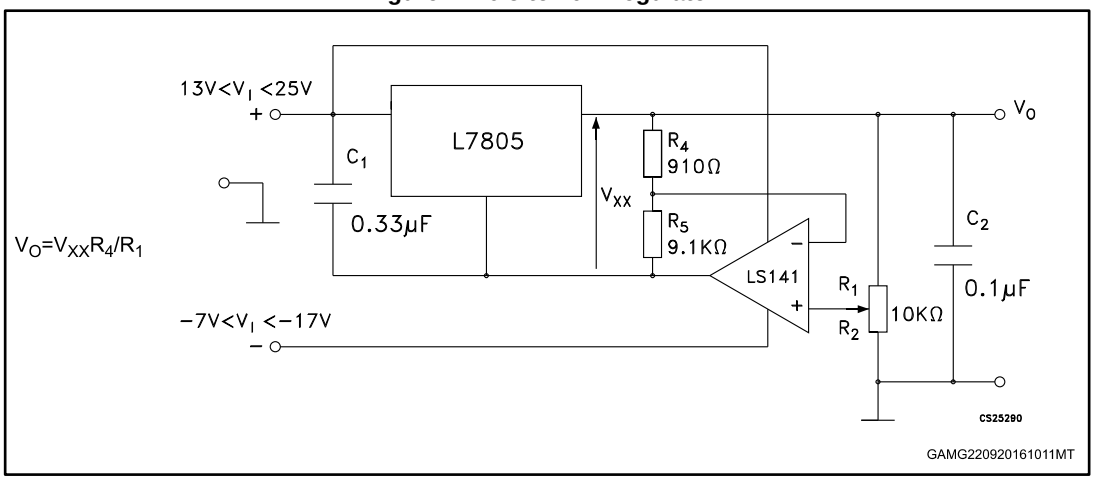

Figure 13: High current voltage regulator

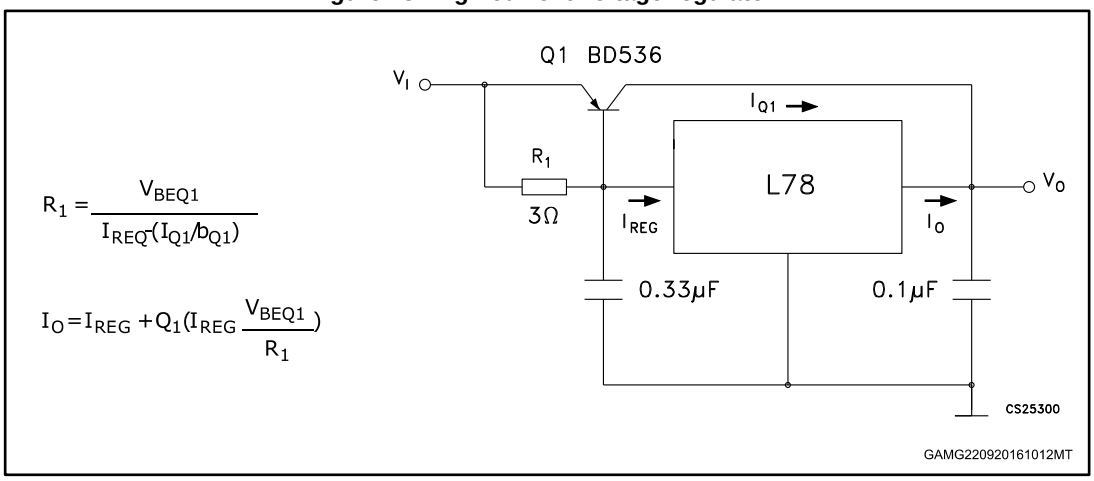

Figure 14: High output current with short circuit protection

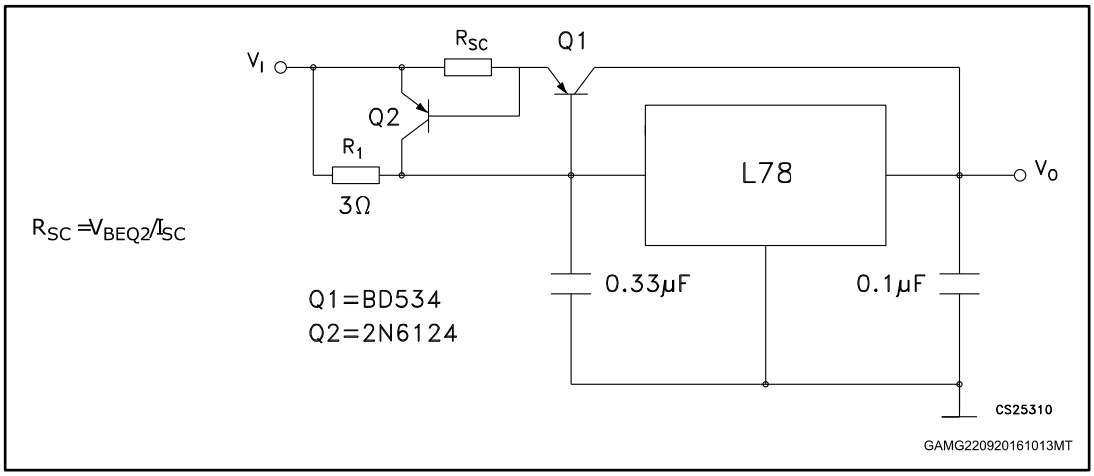

Figure 15: Tracking voltage regulator

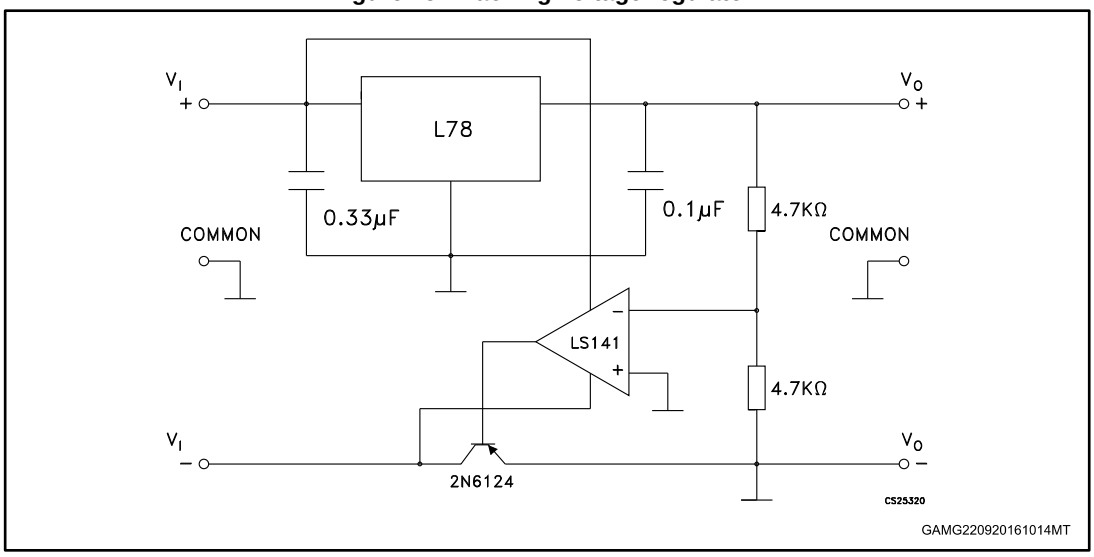

Figure 16: Split power supply (± 15 V - 1 A)

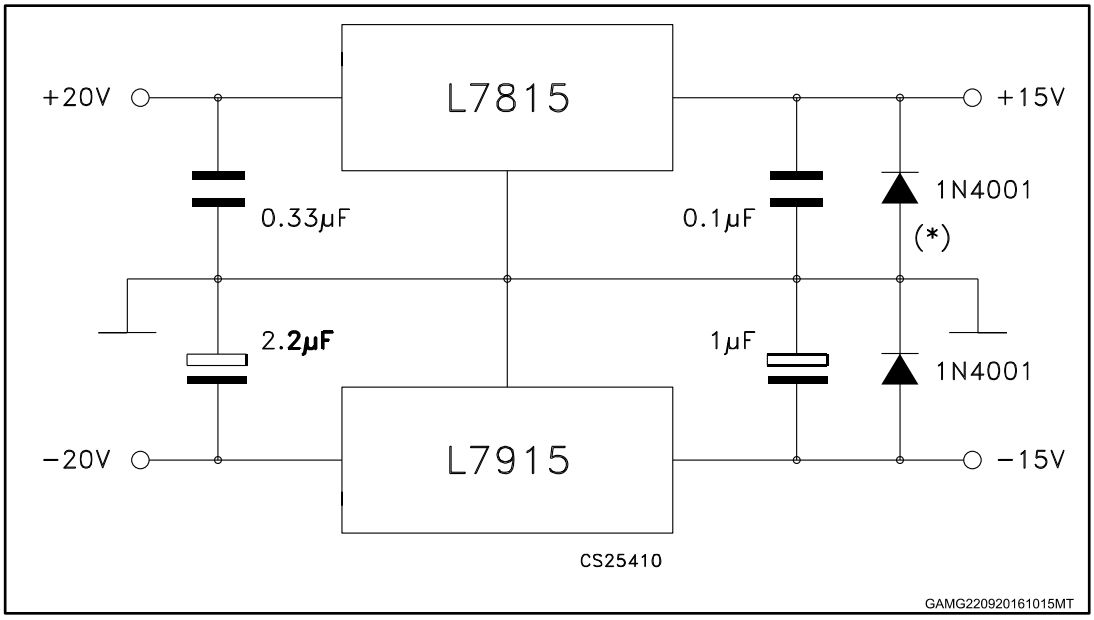

* Against potential latch-up problems.

Figure 17: Negative output voltage circuit

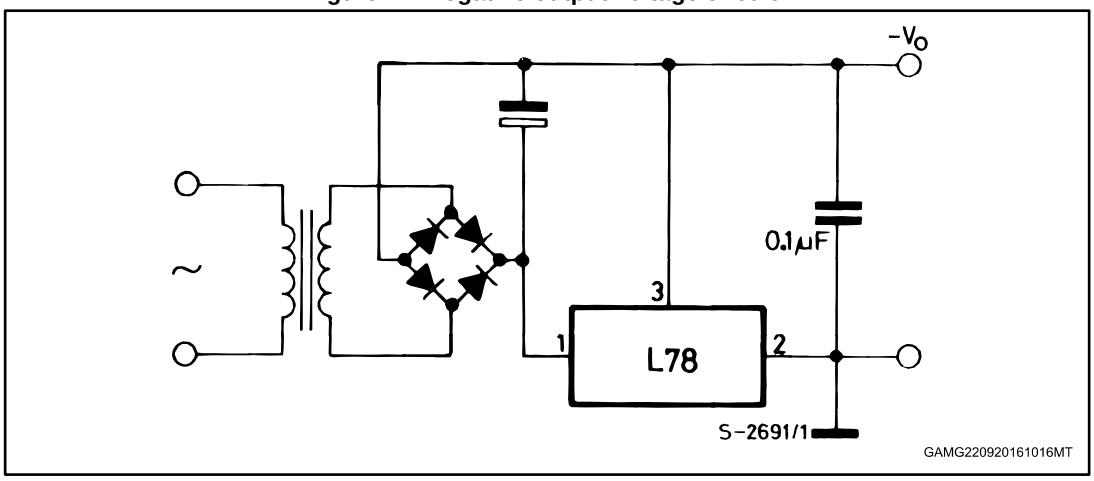

Figure 18: Switching regulator

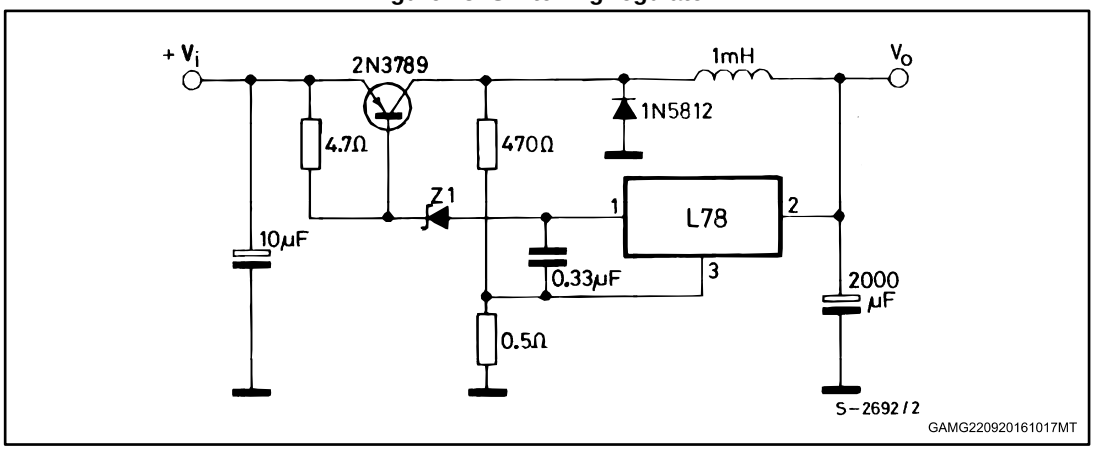

Figure 19: High input voltage circuit (configuration 1)

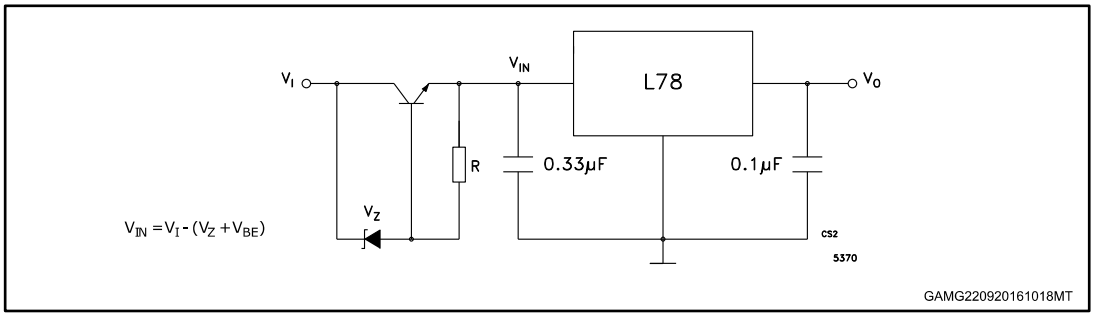

Figure 20: High input voltage circuit (configuration 2)

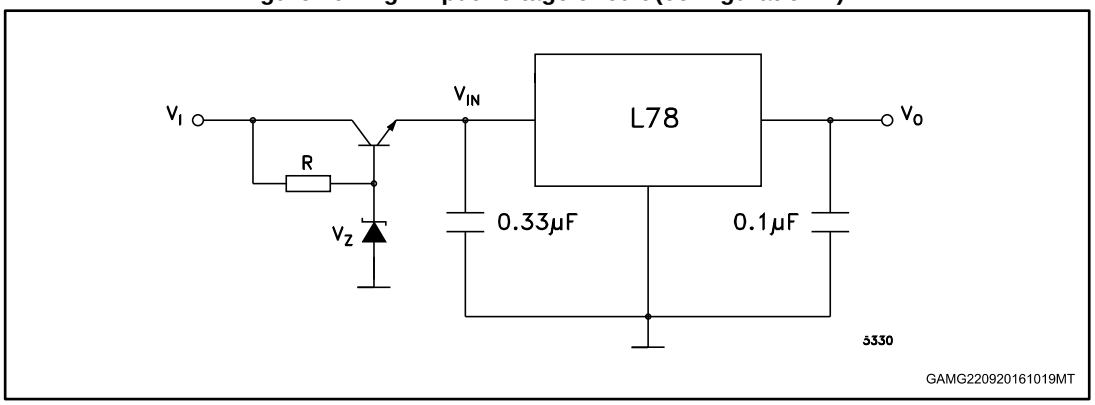

Figure 21: High input and output voltage

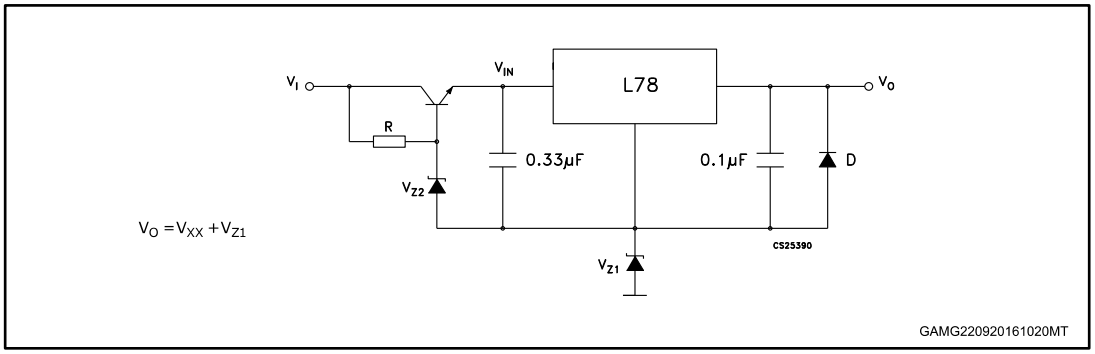

Figure 22: Reducing power dissipation with dropping resistor

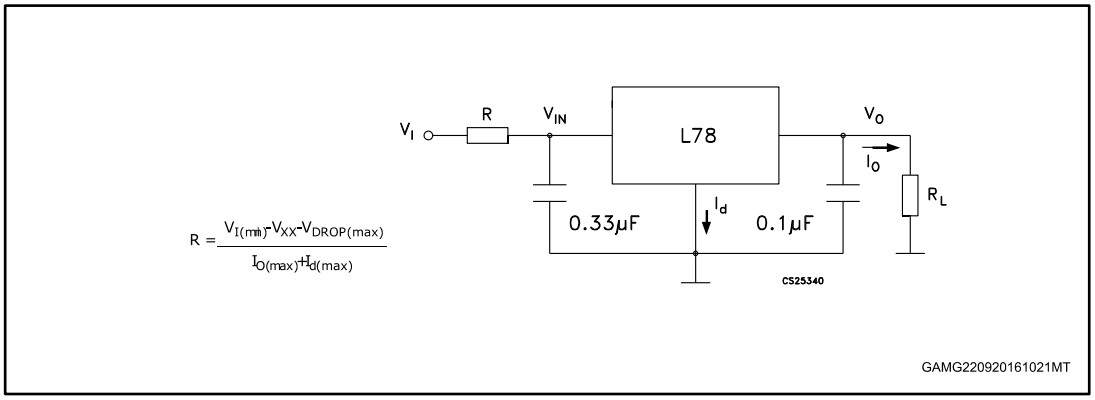

Figure 23: Remote shutdown

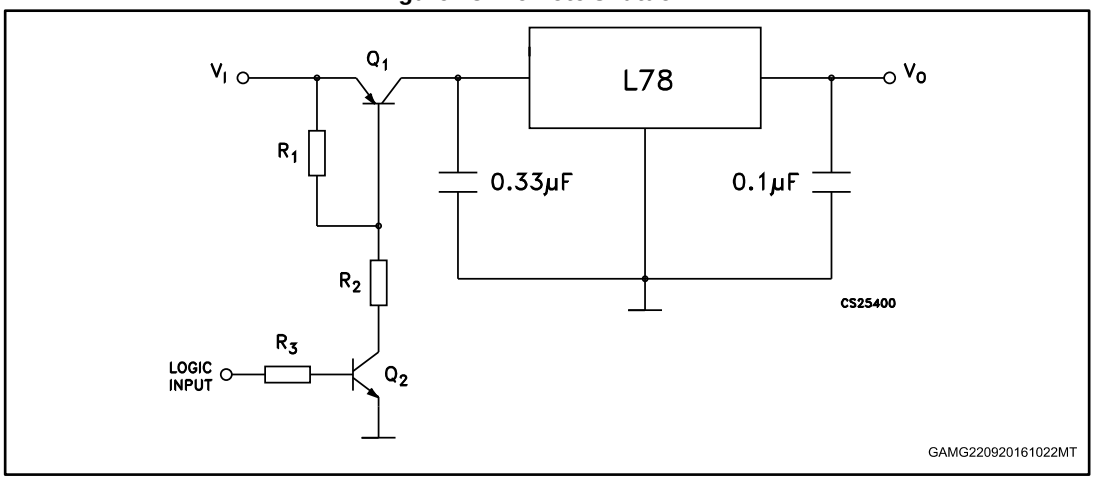

Figure 24: Power AM modulator (unity voltage gain, IO ≤ 0.5)

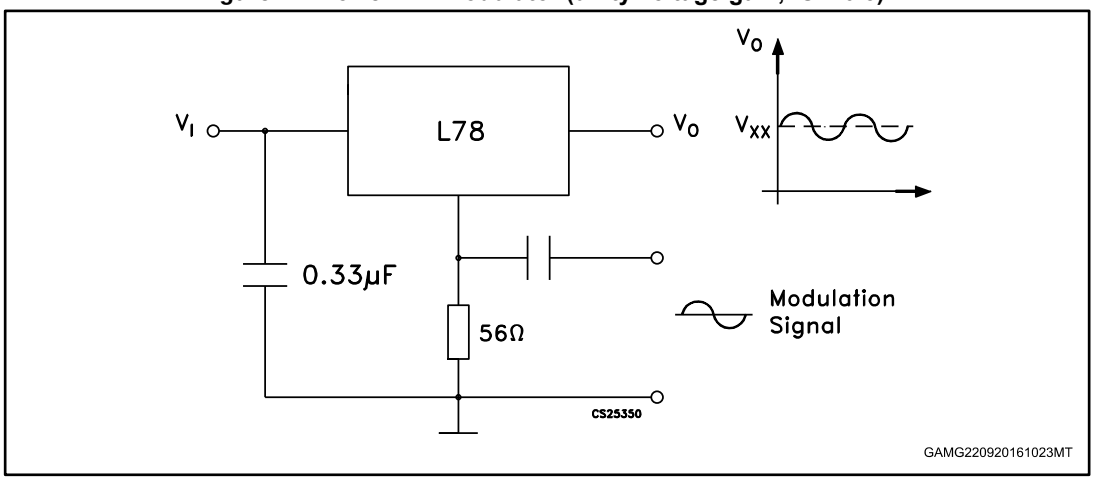

The circuit performs well up to 100 kHz.

Figure 25: Adjustable output voltage with temperature compensation

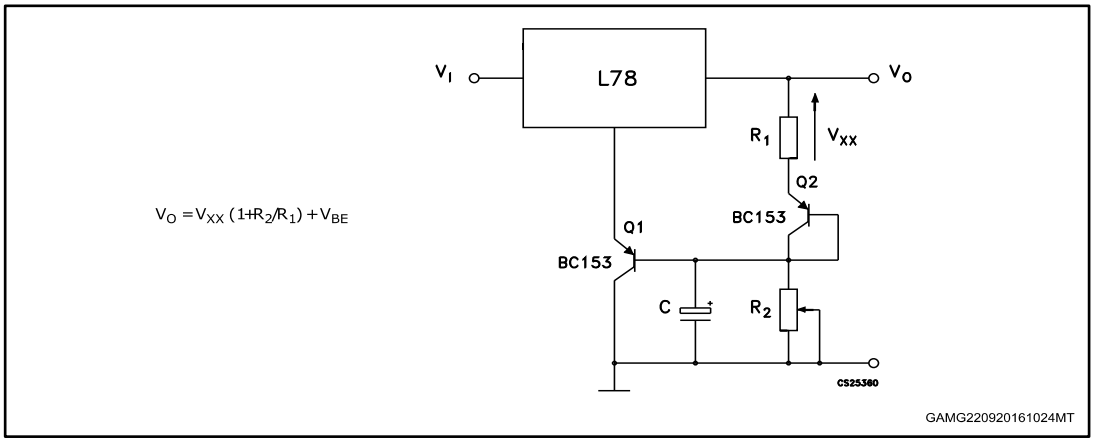

Q_2 is connected as a diode in order to compensate the variation of the Q_1 V_{BE} with the temperature. C allows a slow rise time of the V_O.

Figure 26: Light controllers (VO(min) = VXX + VBE)

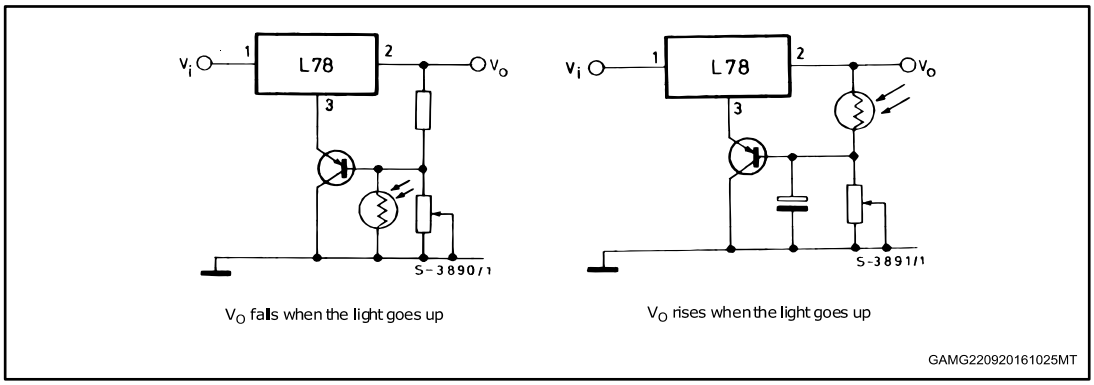

Figure 27: Protection against input short-circuit with high capacitance loads

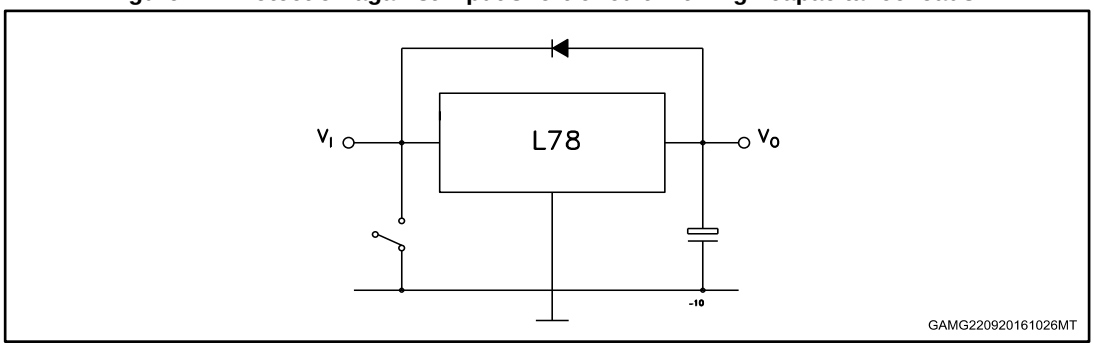

Application with high capacitance loads and an output voltage greater than 6 volts need an external diode (see *Figure 22: "Reducing power dissipation with dropping resistor"*) to protect the device against input short circuit. In this case the input voltage falls rapidly while the output voltage decrease slowly. The capacitance discharges by means of the base-emitter junction of the series pass transistor in the regulator. If the energy is sufficiently high, the transistor may be destroyed. The external diode by-passes the current from the IC to ground.

7 Typical performance

Figure 28: Dropout voltage vs junction temperature

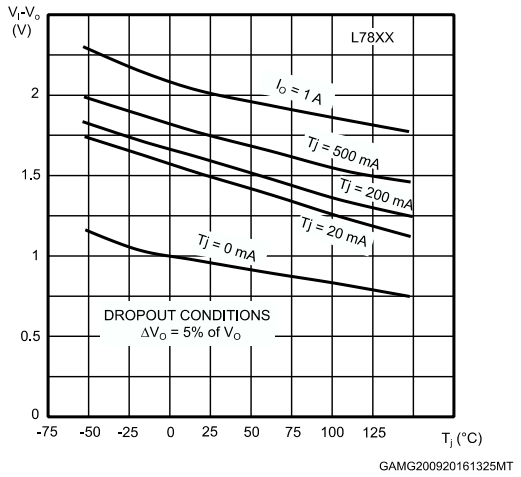

Figure 29: Peak output current vs input/output differential voltage

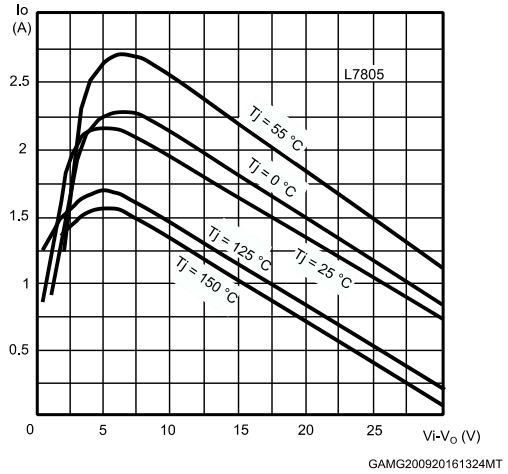

Figure 30: Supply voltage rejection vs frequency

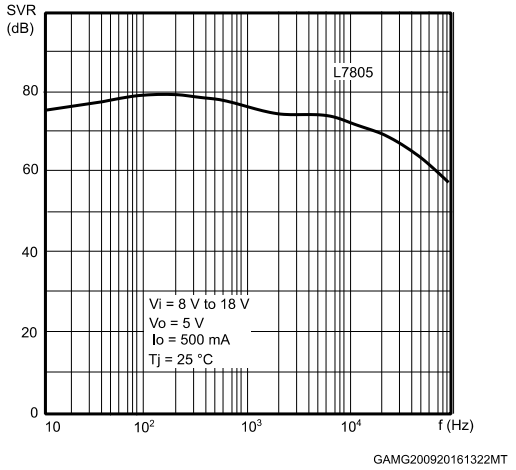

Figure 31: Output voltage vs junction temperature

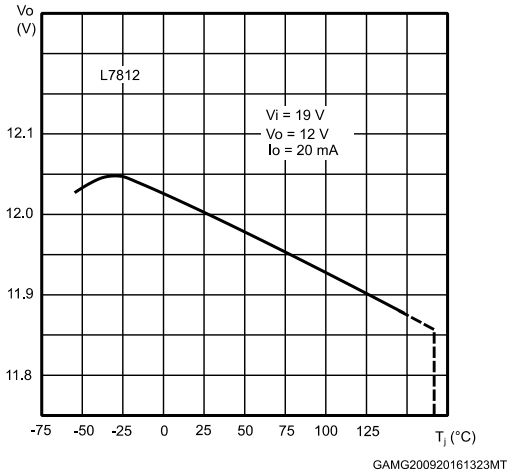

Figure 32: Output impedance vs frequency

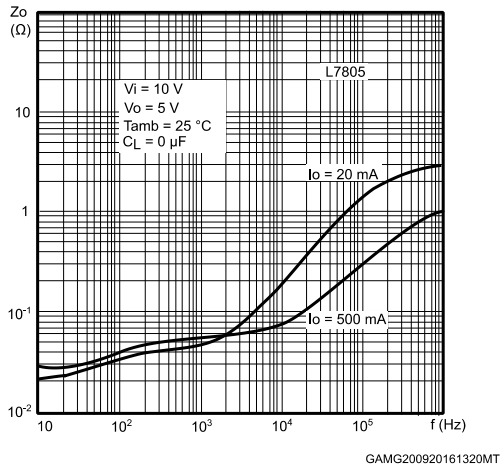

Figure 33: Quiescent current vs junction temp.

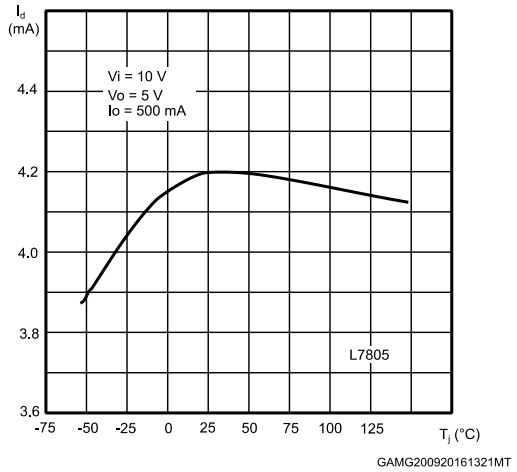

Figure 34: Load transient response

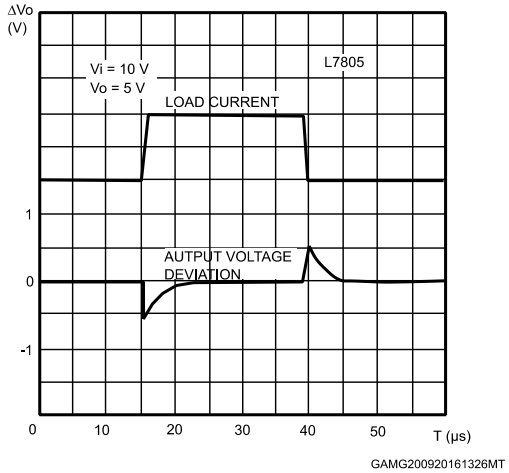

Figure 35: Line transient response

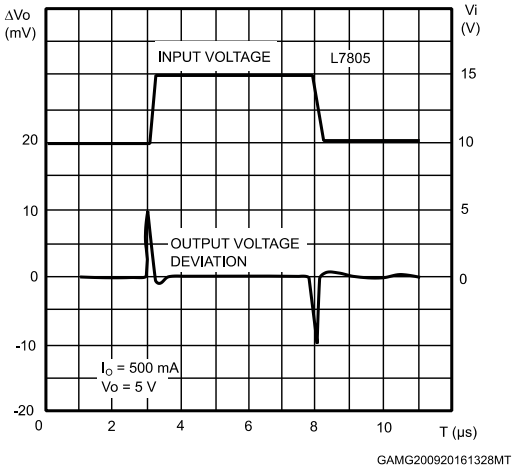

Figure 36: Quiescent current vs. input voltage

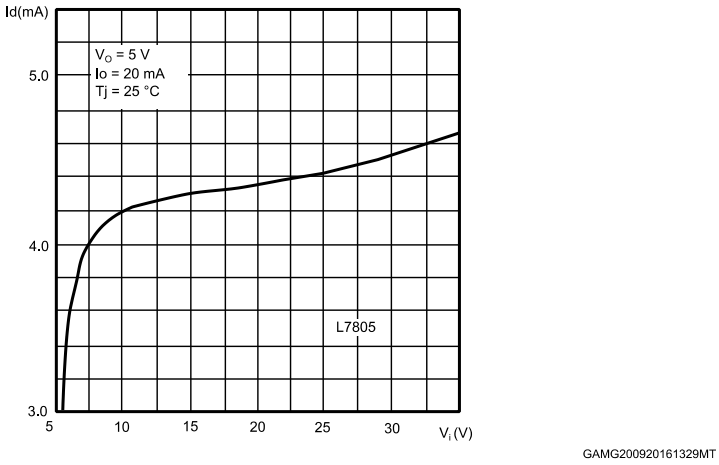

8 Package information

In order to meet environmental requirements, ST offers these devices in different grades of ECOPACK® packages, depending on their level of environmental compliance. ECOPACK® specifications, grade definitions and product status are available at: ***www.st.com***. ECOPACK® is an ST trademark.

8.1 TO-220 (dual gauge) package information

Figure 37: TO-220 (dual gauge) package outline

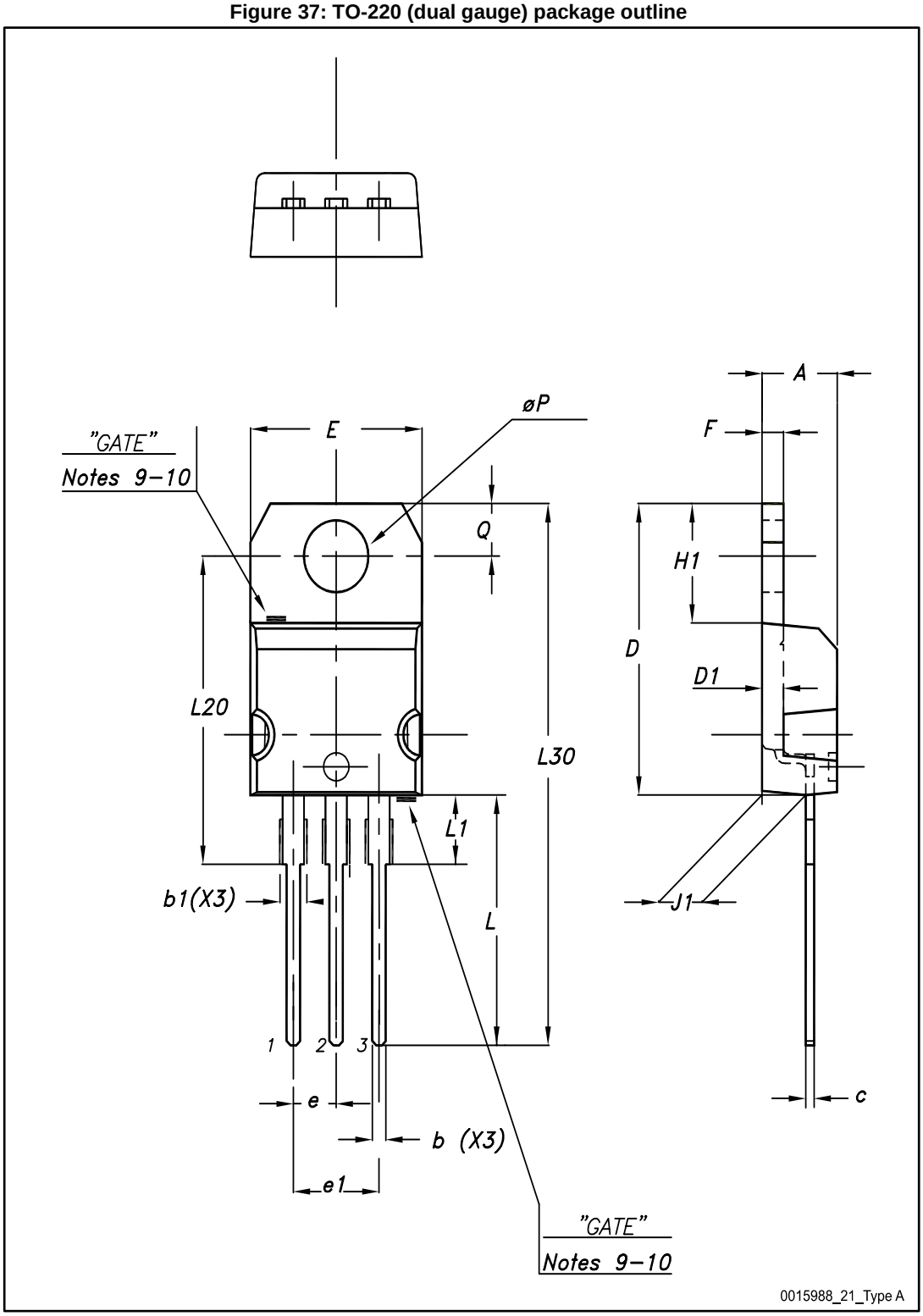

Table 19: TO-220 (dual gauge) mechanical data

Dim.	mm		
	Min.	Typ.	Max.
A	4.40		4.60
b	0.61		0.88
b1	1.14		1.70
c	0.48		0.70
D	15.25		15.75
D1		1.27	
E	10		10.40
e	2.40		2.70
e1	4.95		5.15
F	1.23		1.32
H1	6.20		6.60
J1	2.40		2.72
L	13		14
L1	3.50		3.93
L20		16.40	
L30		28.90	
ØP	3.75		3.85
Q	2.65		2.95

8.2 TO-220 (single gauge) package information

Figure 38: TO-220 (single gauge) package outline

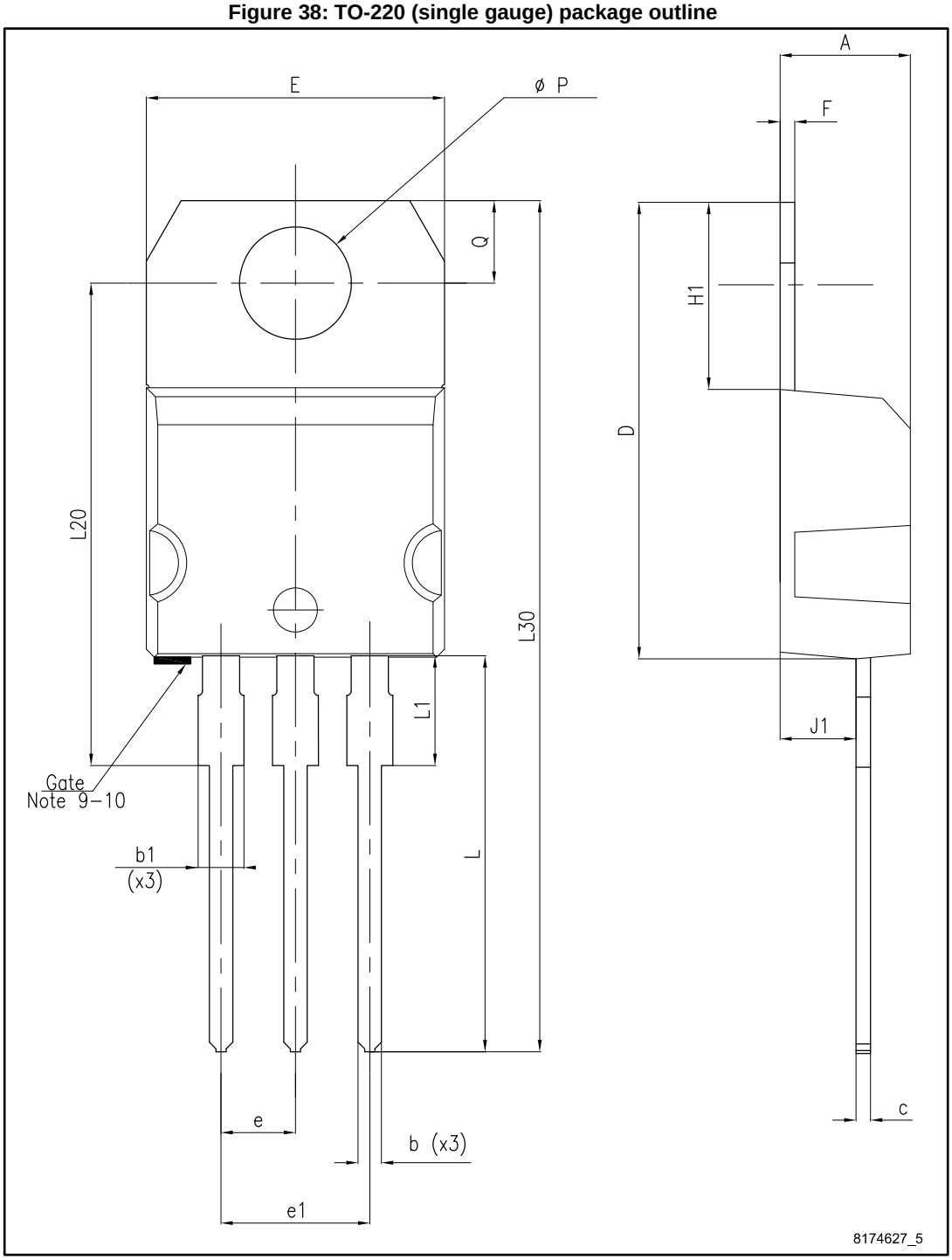

Table 20: TO-220 (single gauge) mechanical data

Dim.	mm		
	Min.	Typ.	Max.
A	4.40		4.60
b	0.61		0.88
b1	1.14		1.70
c	0.48		0.70
D	15.25		15.75
E	10.00		10.40
e	2.40		2.70
e1	4.95		5.15
F	0.51		0.60
H1	6.20		6.60
J1	2.40		2.72
L	13.00		14.00
L1	3.50		3.93
L20		16.40	
L30		28.90	
ØP	3.75		3.85
Q	2.65		2.95

8.3 TO-220FP package information

Figure 39: TO-220FP package outline

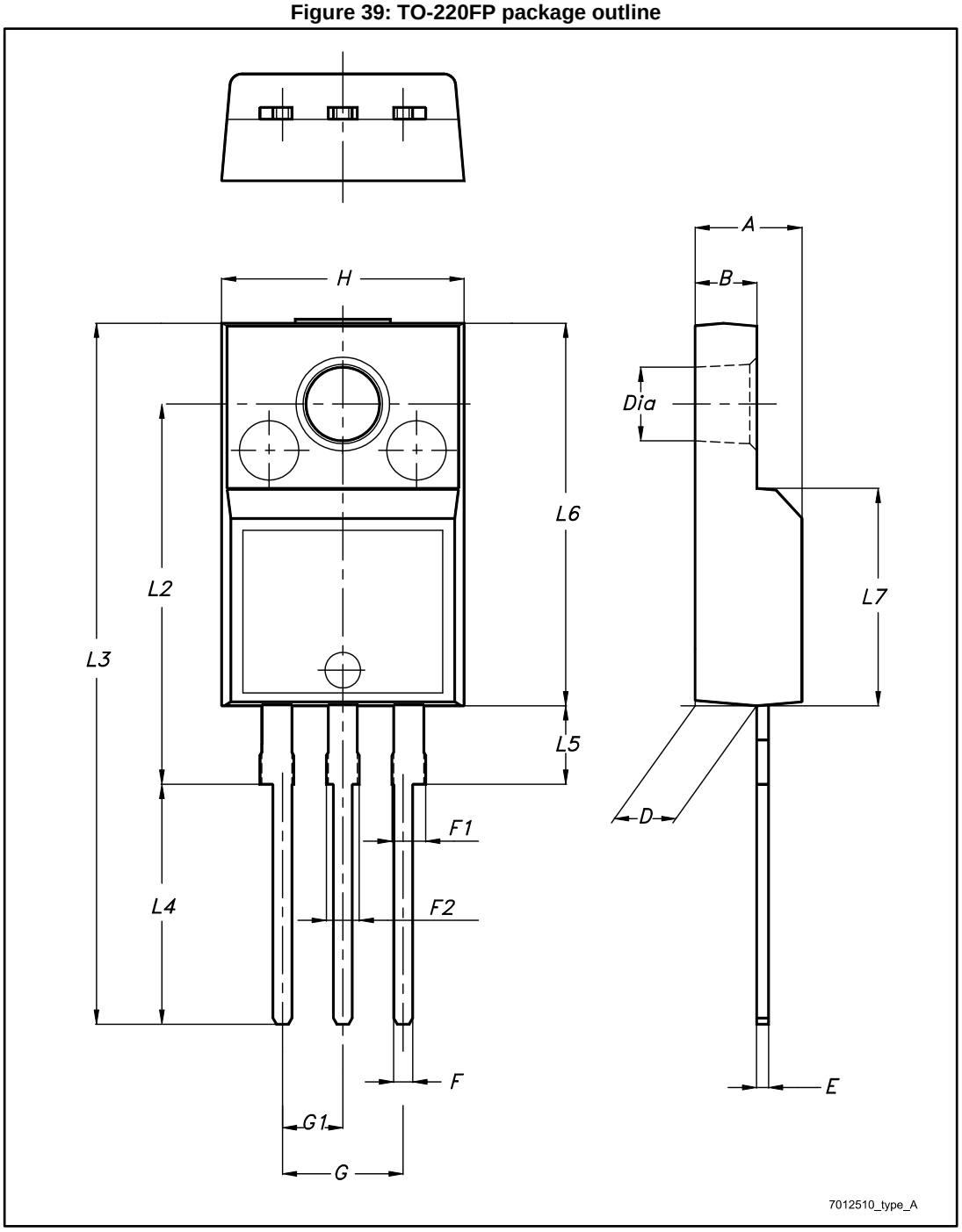

Table 21: TO-220FP package mechanical data

Dim.	mm		
	Min.	Typ.	Max.
A	4.4		4.6
B	2.5		2.7
D	2.5		2.75
E	0.45		0.7
F	0.75		1
F1	1.15		1.70
F2	1.15		1.70
G	4.95		5.2
G1	2.4		2.7
H	10		10.4
L2		16	
L3	28.6		30.6
L4	9.8		10.6
L5	2.9		3.6
L6	15.9		16.4
L7	9		9.3
Dia	3		3.2

8.4 TO-220 packing information

Figure 40: Tube for TO-220 (dual gauge) (mm.)

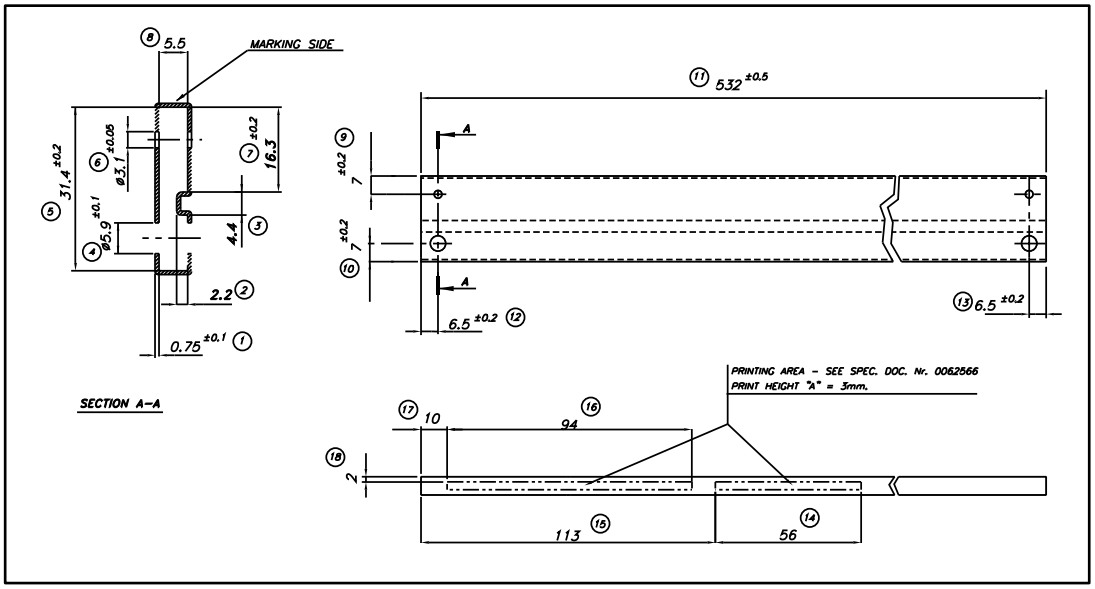

Figure 41: Tube for TO-220 (single gauge) (mm.)

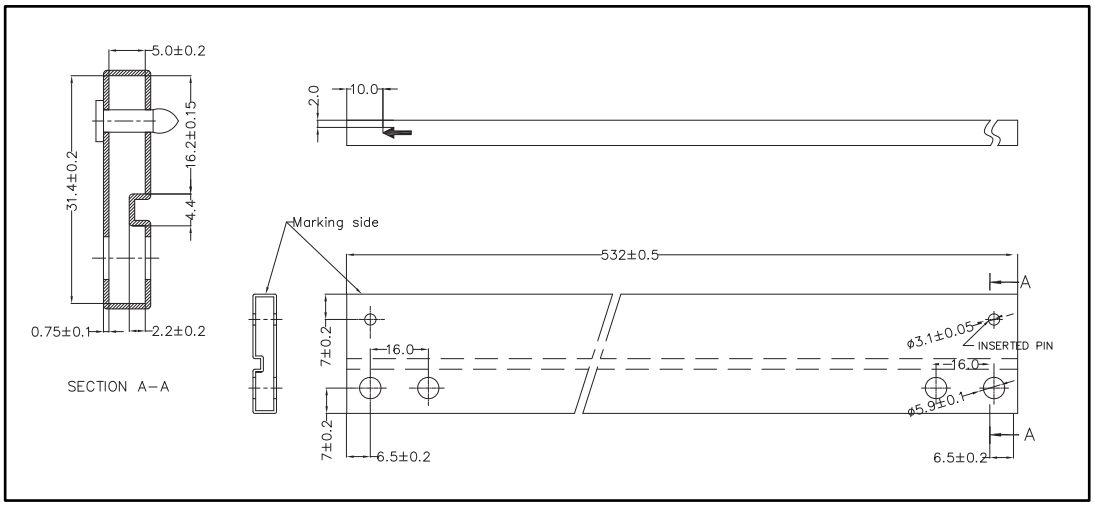

8.5 DPAK package information

Figure 42: DPAK package outline

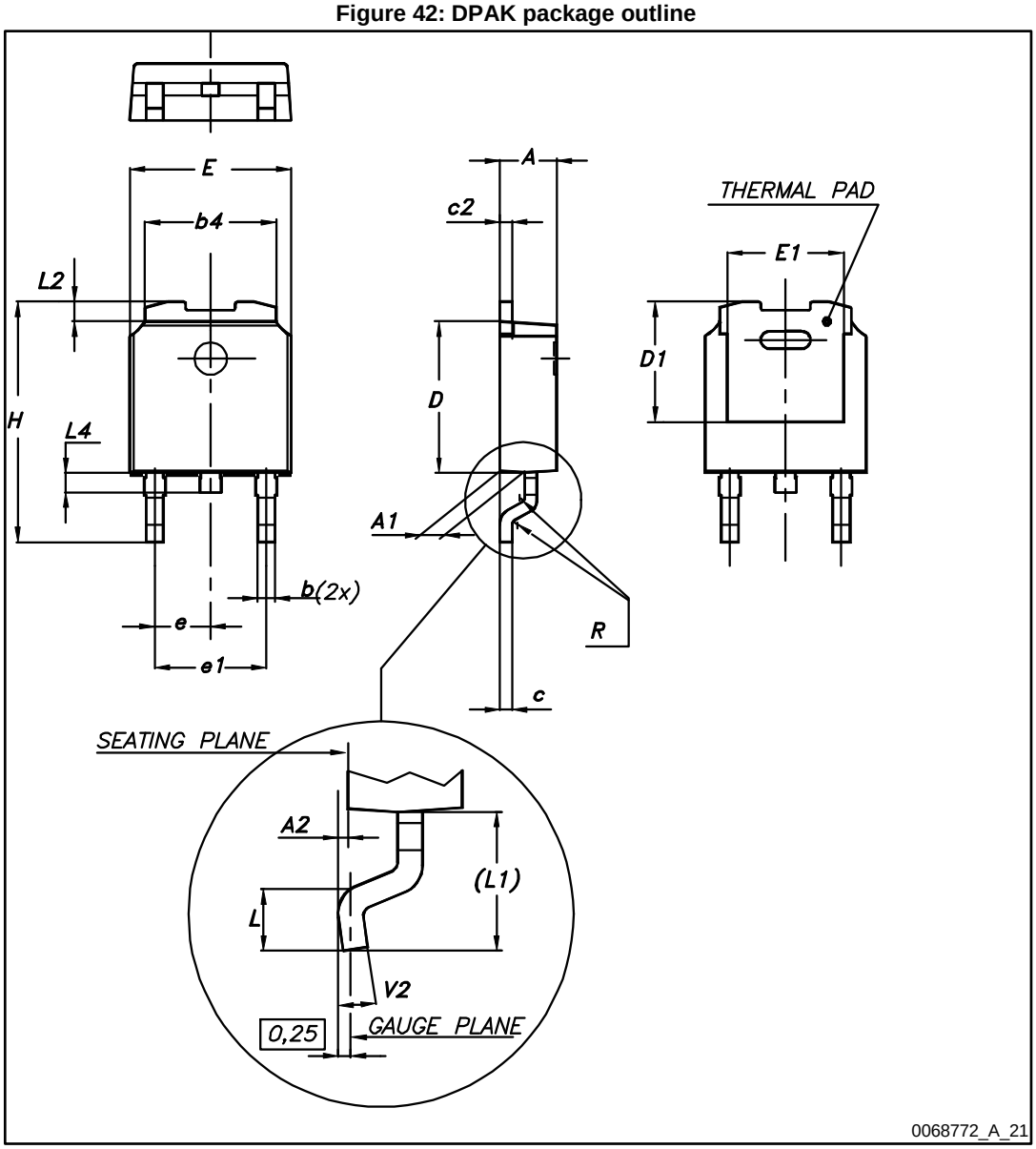

Table 22: DPAK mechanical data

Dim.	mm		
	Min.	Typ.	Max.
A	2.20		2.40
A1	0.90		1.10
A2	0.03		0.23
b	0.64		0.90
b4	5.20		5.40
c	0.45		0.60
c2	0.48		0.60
D	6.00		6.20
D1		5.10	
E	6.40		6.60
E1		4.70	
e		2.28	
e1	4.40		4.60
H	9.35		10.10
L	1.00		1.50
(L1)		2.80	
L2		0.80	
L4	0.60		1.00
R		0.20	
V2	0°		8°

Figure 43: DPAK recommended footprint (dimensions are in mm)

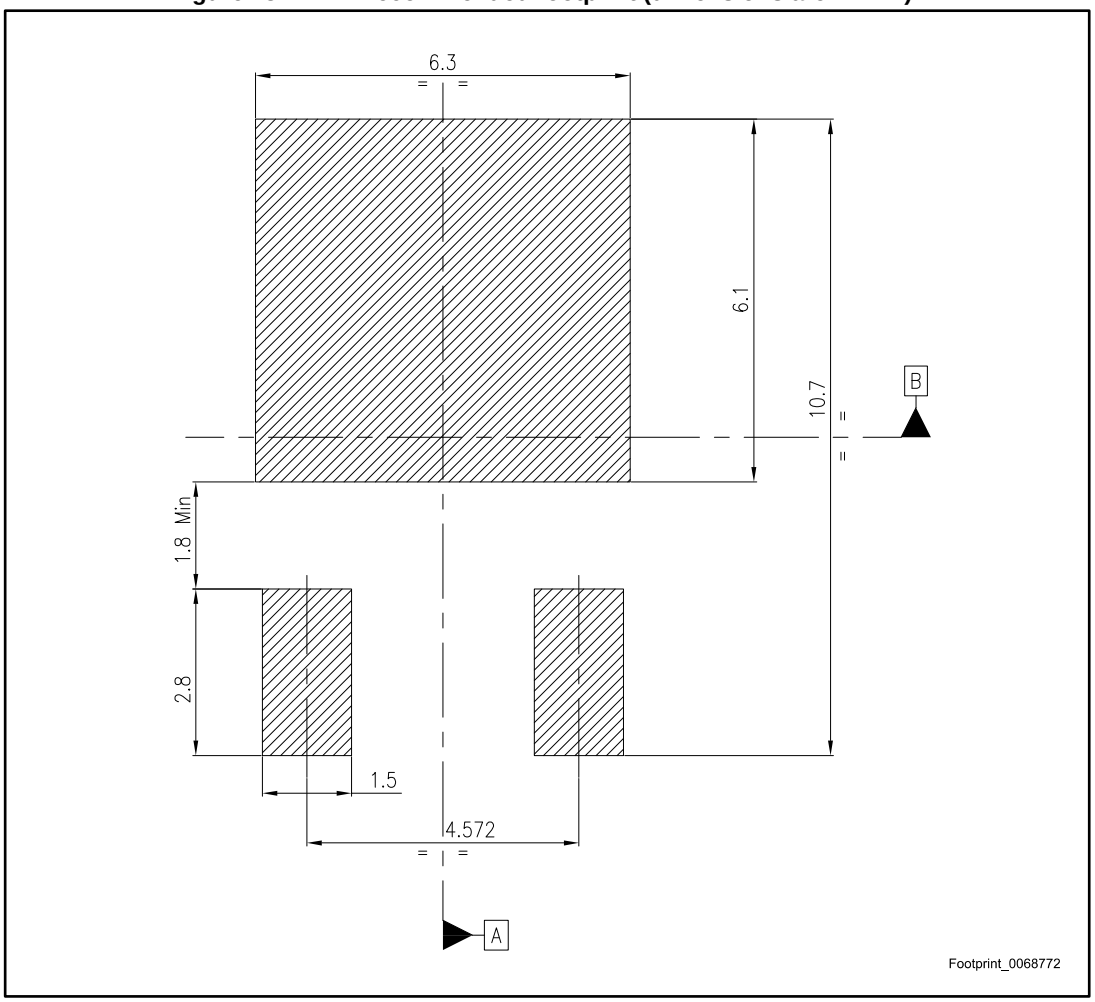

8.6 D²PAK (SMD 2L STD-ST) type A package information

Figure 44: D²PAK (SMD 2L STD-ST) type A package outline

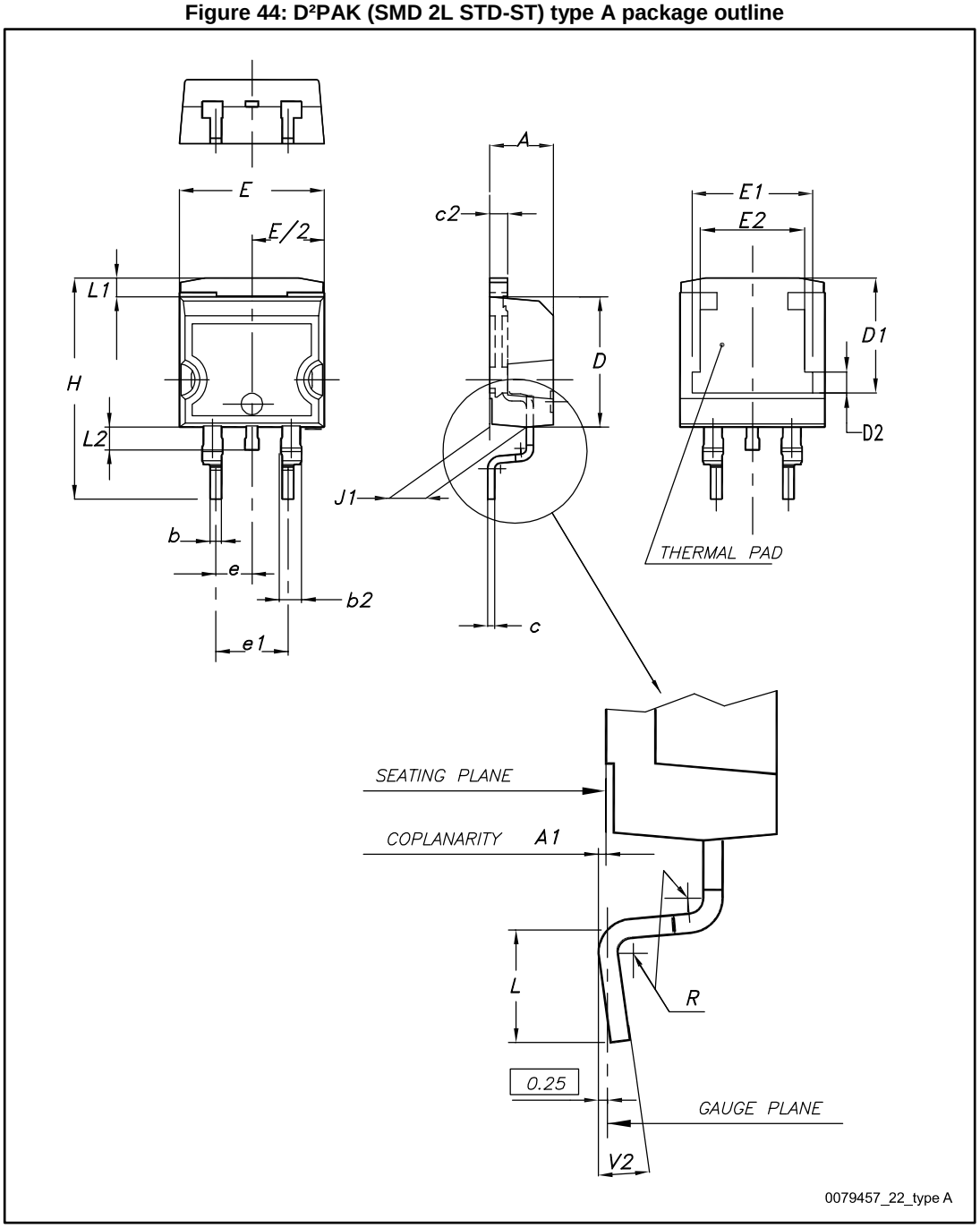

Table 23: D²PAK (SMD 2L STD-ST) mechanical data

Dim.	mm		
	Min.	Typ.	Max.
A	4.40		4.60
A1	0.03		0.23
b	0.70		0.93
b2	1.14		1.70
c	0.45		0.60
c2	1.23		1.36
D	8.95		9.35
D1	7.50	7.75	8.00
D2	1.10	1.30	1.50
E	10		10.40
E1	8.50	8.70	8.90
E2	6.85	7.05	7.25
e		2.54	
e1	4.88		5.28
H	15		15.85
J1	2.49		2.69
L	2.29		2.79
L1	1.27		1.40
L2	1.30		1.75
R		0.4	
V2	0°		8°

8.7 D²PAK (SMD 2L Wooseok-subcon.) package information

Figure 45: D²PAK (SMD 2L Wooseok-subcon.) package outline

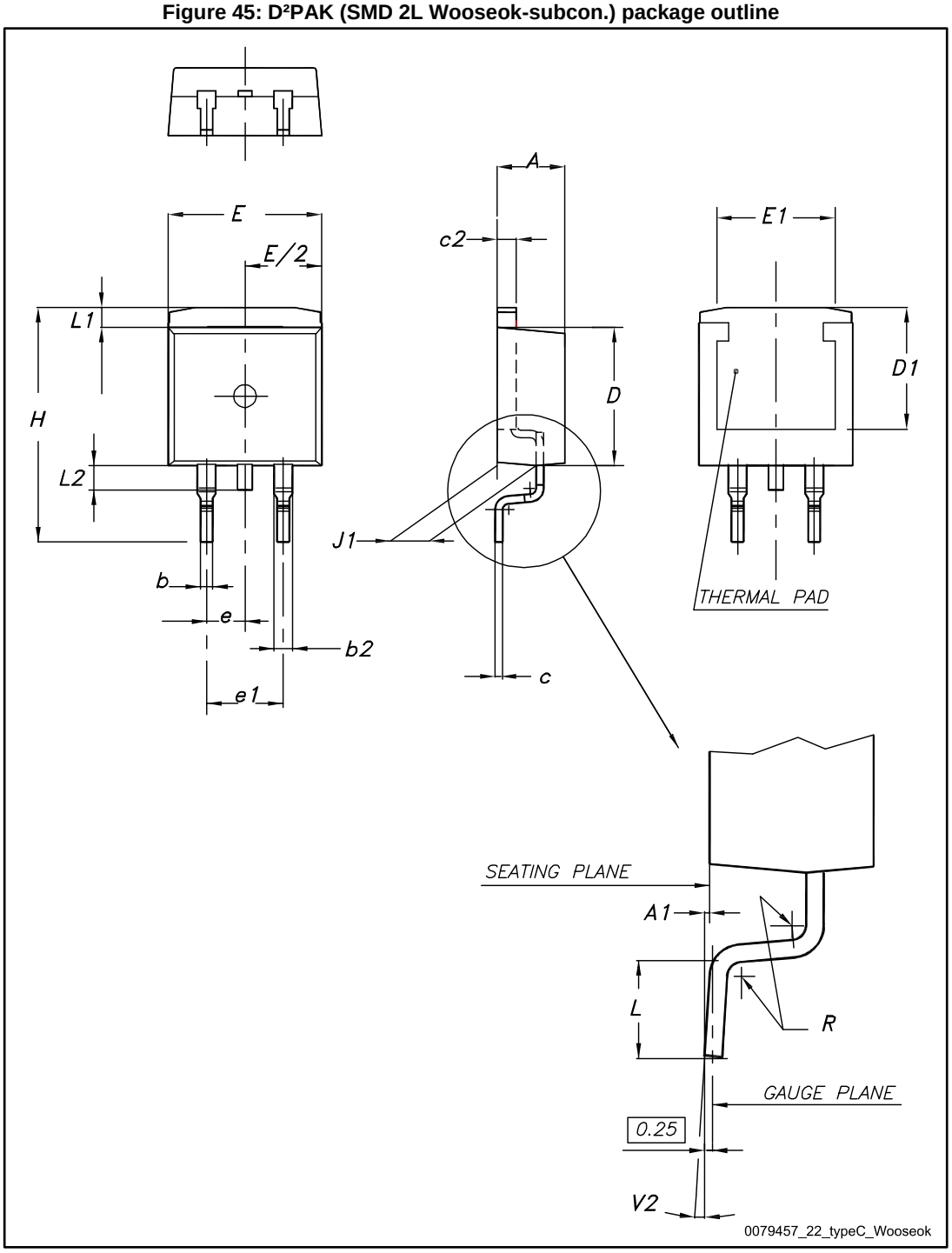

Table 24: D²PAK (SMD 2L Wooseok-subcon.) mechanical data

Dim.	mm		
	Min.	Typ.	Max.
A	4.30		4.70
A1	0		0.20
b	0.70		0.90
b2	1.17		1.37
c	0.45	0.50	0.60
c2	1.25	1.30	1.40
D	9	9.20	9.40
D1	7.50		
E	9.80		10.20
E1	7.50		
e		2.54	
e1		5.08	
H	15	15.30	15.60
J1	2.20		2.60
L	1.79		2.79
L1	1		1.40
L2	1.20		1.60
R		0.30	
V2	0°		3°

Figure 46: D²PAK (SMD 2L Wooseok-subcon.) recommended footprint

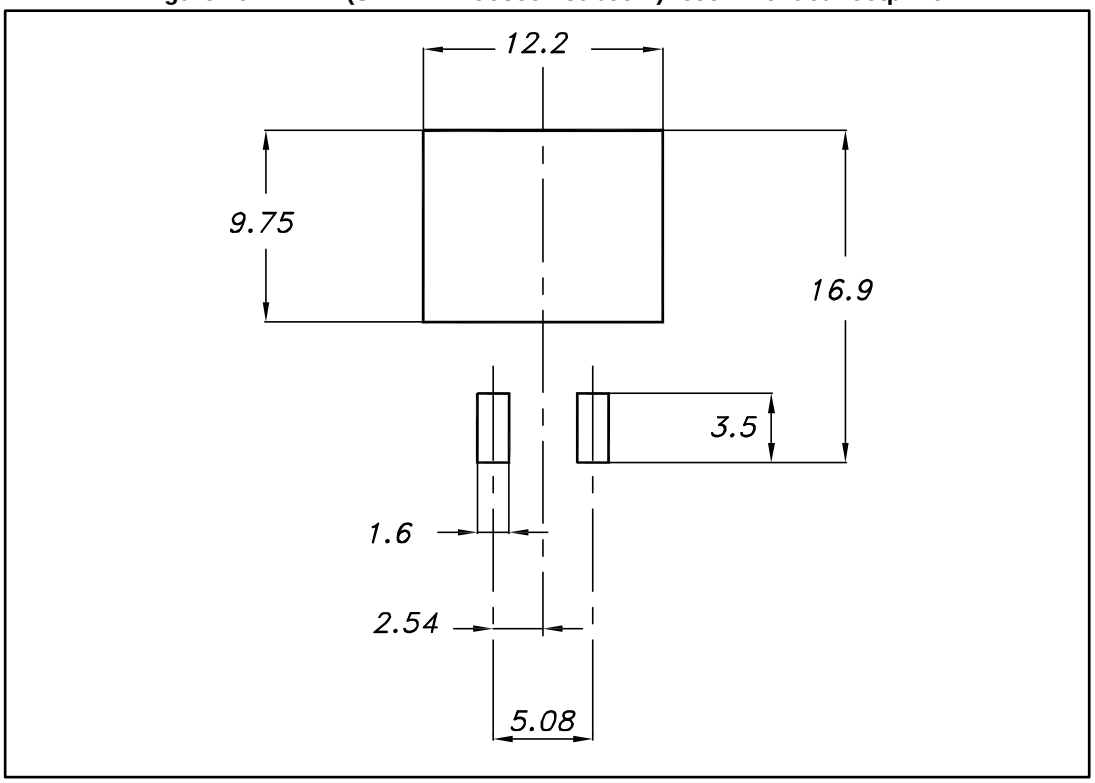

8.8 D²PAK and DPAK packing information

Figure 47: Tape outline

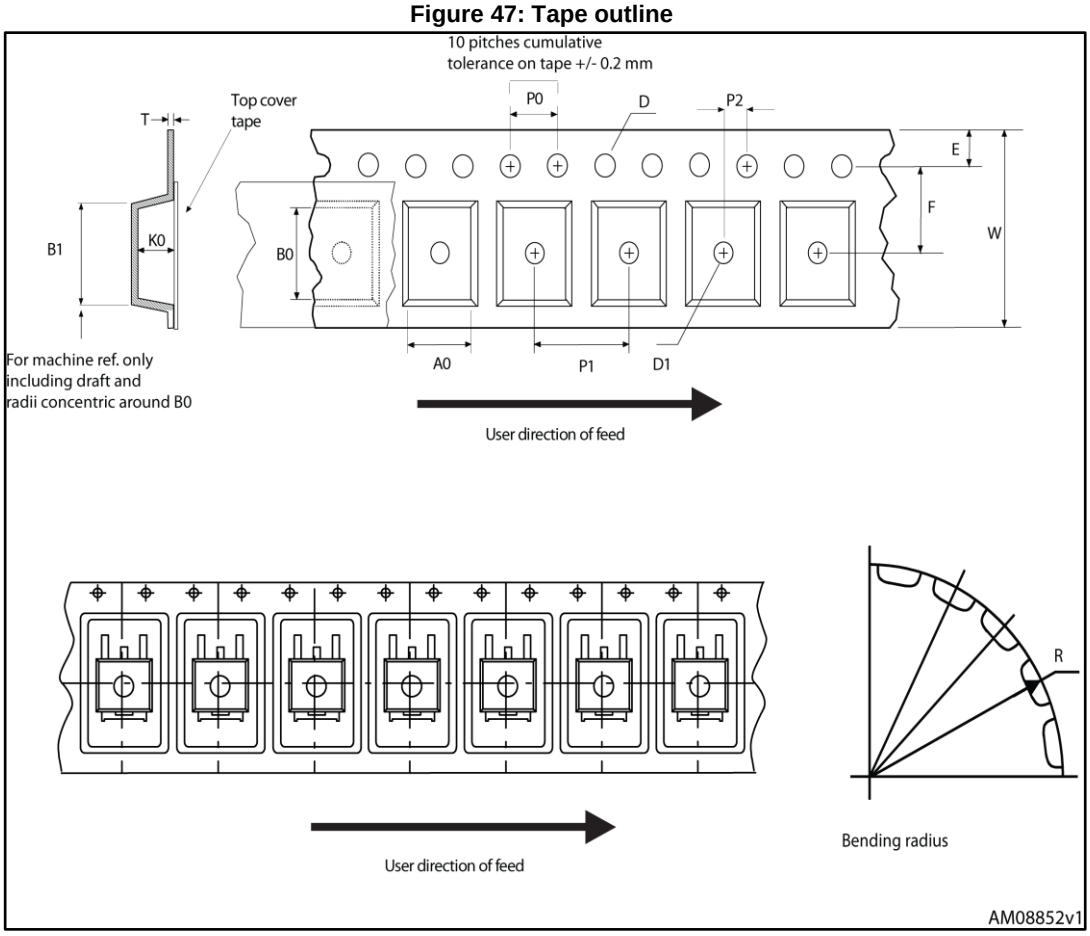

Figure 48: Reel outline

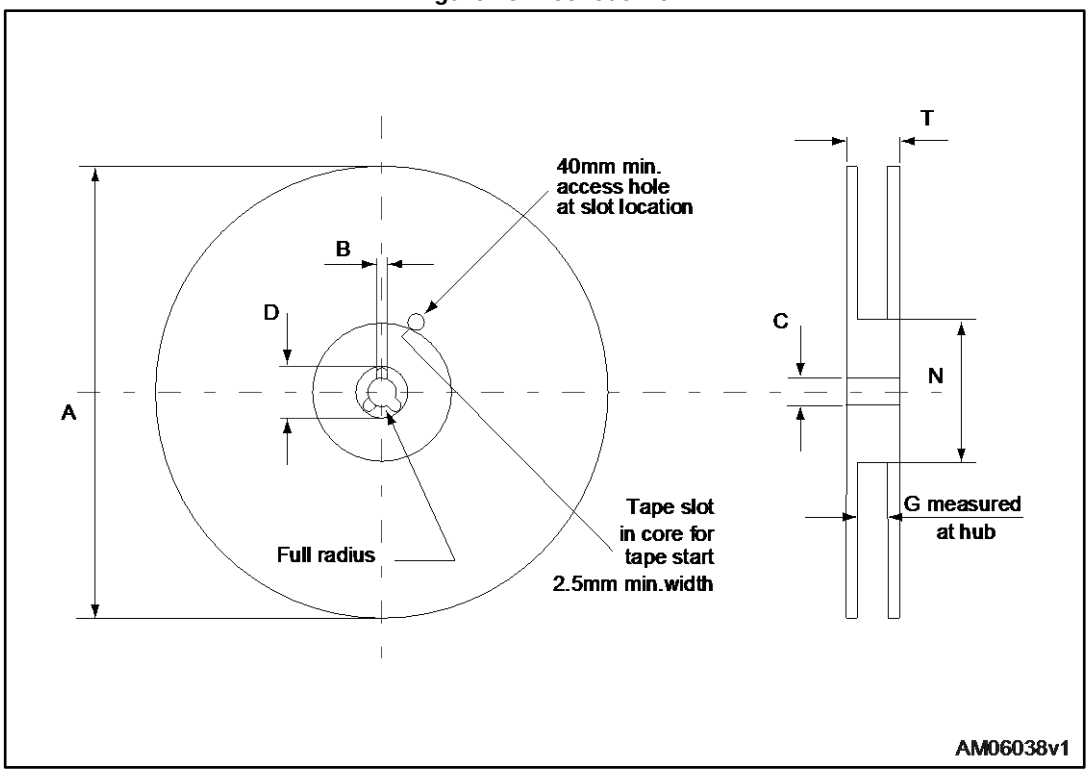

Table 25: D²PAK tape and reel mechanical data

Tape			Reel		
Dim.	mm		Dim.	mm	
	Min.	Max.		Min.	Max.
A0	10.5	10.7	A		330
B0	15.7	15.9	B	1.5	
D	1.5	1.6	C	12.8	13.2
D1	1.59	1.61	D	20.2	
E	1.65	1.85	G	24.4	26.4
F	11.4	11.6	N	100	
K0	4.8	5.0	T		30.4
P0	3.9	4.1			
P1	11.9	12.1	Base quantity		1000
P2	1.9	2.1	Bulk quantity		1000
R	50				
T	0.25	0.35			
W	23.7	24.3			

Table 26: DPAK tape and reel mechanical data

Tape			Reel		
Dim.	mm		Dim.	mm	
	Min.	Max.		Min.	Max.
A0	6.8	7	A		330
B0	10.4	10.6	B	1.5	
B1		12.1	C	12.8	13.2
D	1.5	1.6	D	20.2	
D1	1.5		G	16.4	18.4
E	1.65	1.85	N	50	
F	7.4	7.6	T		22.4
K0	2.55	2.75			
P0	3.9	4.1	Base qty.		2500
P1	7.9	8.1	Bulk qty.		2500
P2	1.9	2.1			
R	40				
T	0.25	0.35			
W	15.7	16.3			

9 Ordering information

Table 27: Order codes

Part number	Order codes					
	TO-220 (single gauge)	TO-220 (dual gauge)	DPAK	D²PAK	TO-220FP	Output voltages
L7805C	L7805CV	L7805CV-DG	L7805CDT-TR	L7805CD2T-TR	L7805CP	5 V
L7805AB	L7805ABV	L7805ABV-DG		L7805ABD2T-TR	L7805ABP	5 V
L7805AC	L7805ACV	L7805ACV-DG		L7805ACD2T-TR	L7805ACP	5 V
L7806C	L7806CV	L7806CV-DG		L7806CD2T-TR		6 V
L7806AB	L7806ABV	L7806ABV-DG		L7806ABD2T-TR		6 V
L7806AC	L7806ACV	L7806ACV-DG				6 V
L7808C	L7808CV	L7808CV-DG		L7808CD2T-TR		8 V
L7808AB	L7808ABV	L7808ABV-DG		L7808ABD2T-TR		8 V
L7808AC	L7808ACV	L7808ACV-DG				8 V
L7885C	L7885CV					8.5 V
L7809C	L7809CV	L7809CV-DG		L7809CD2T-TR	L7809CP	9 V
L7809AB	L7809ABV	L7809ABV-DG		L7809ABD2T-TR		9 V
L7809AC	L7809ACV					9 V
L7812C	L7812CV	L7812CV-DG		L7812CD2T-TR	L7812CP	12 V
L7812AB	L7812ABV	L7812ABV-DG		L7812ABD2T-TR		12 V
L7812AC	L7812ACV	L7812ACV-DG		L7812ACD2T-TR		12 V
L7815C	L7815CV	L7815CV-DG		L7815CD2T-TR	L7815CP	15 V
L7815AB	L7815ABV	L7815ABV-DG		L7815ABD2T-TR		15 V
L7815AC	L7815ACV	L7815ACV-DG		L7815ACD2T-TR		15 V
L7818C	L7818CV	L7818CV-DG				18 V
L7824C	L7824CV	L7824CV-DG		L7824CD2T-TR	L7824CP	24 V
L7824AB	L7824ABV	L7824ABV-DG				24 V
L7824AC	L7824ACV	L7824ACV-DG				24 V

10 Revision history

Table 28: Document revision history

Date	Revision	Changes
21-Jun-2004	12	Document updating.
03-Aug-2006	13	Order codes has been updated and new template.
19-Jan-2007	14	D²PAK mechanical data has been updated and add footprint data.
31-May-2007	15	Order codes has been updated.
29-Aug-2007	16	Added Table 1 in cover page.
11-Dec-2007	17	Modified: Table 27.
06-Feb-2008	18	Added: TO-220 mechanical data Figure 38 on page 38 , Figure 39 on page 39, and Table 23 on page 37. Modified: Table 27 on page 58.
18-Mar-2008	19	Added: Table 29: DPAK mechanical data on page 50, Table 30: Tape and reel DPAK mechanical data on page 52. Modified: Table 27 on page 58.
26-Jan-2010	20	Modified Table 1 on page 1 and Table 23 on page 37, added: Figure 38 on page 38 and Figure 39 on page 39, Figure 40 on page 45 and Figure 41 on page 45.
04-Mar-2010	21	Added notes Figure 38 on page 38.
08-Sep-2010	22	Modified Table 27 on page 58.
23-Nov-2010	23	Added: TJ = 25 °C test condition in DVO on Table 3, 4, 5, 6, 7, 8 and Table 9.
16-Sep-2011	24	Modified title on page 1.
30-Nov-2011	25	Added: order codes L7805CV-DG, L7806CV-DG, L7808ABV-DG, L7812CV-DG and L7815CV-DG Table 27 on page 58.
08-Feb-2012	26	Added: order codes L7805ACV-DG, L7805ABV-DG, L7806ABV-DG, L7808CV-DG, L7809CV-DG, L7812ACV-DG, L7818CV-DG, L7824CV-DG Table 27 on page 58.
27-Mar-2012	27	Added: order codes L7812ABV-DG, L7815ABV-DG Table 27 on page 58.
27-Apr-2012	28	Modified: VI = 10.4 to 23 V ==> VI = 11.4 to 23 V test conditon value Line regulation Table 6 on page 13.
10-May-2012	29	Added: order codes L7806ACV-DG, L7808ACV-DG, L7815ACV-DG, L7824ABV-DG and L7824ACV-DG Table 27 on page 58.
19-Sep-2012	30	Modified load regulation units from V to mV in Table 3 to Table 9.
12-Mar-2013	31	Modified: VO output voltage at 25 °C min. value 14.4 V Table 16 on page 23.
04-Mar-2014	32	Part numbers L78xx, L78xxC, L78xxAB, L78xxAC changed to L78. Removed TO-3 package. Updated the description in cover page, Section 2: Pin configuration, Section 3: Maximum ratings, Section 4: Test circuits, Section 5: Electrical characteristics, Section 6: Application information, Section 8: Package information and Table 27: Order codes. Added Section 9: Packaging mechanical data. Minor text changes.
26-Feb-2016	33	Updated *Section 8: Package information*. Minor text changes.
28-Nov-2016	34	Updated *Section 9: "Ordering information"*. Minor text changes.

IMPORTANT NOTICE – PLEASE READ CAREFULLY

STMicroelectronics NV and its subsidiaries ("ST") reserve the right to make changes, corrections, enhancements, modifications, and improvements to ST products and/or to this document at any time without notice. Purchasers should obtain the latest relevant information on ST products before placing orders. ST products are sold pursuant to ST's terms and conditions of sale in place at the time of order acknowledgement.

Purchasers are solely responsible for the choice, selection, and use of ST products and ST assumes no liability for application assistance or the design of Purchasers' products.

No license, express or implied, to any intellectual property right is granted by ST herein.

Resale of ST products with provisions different from the information set forth herein shall void any warranty granted by ST for such product.

ST and the ST logo are trademarks of ST. All other product or service names are the property of their respective owners.

Information in this document supersedes and replaces information previously supplied in any prior versions of this document.

© 2016 STMicroelectronics – All rights reserved