STM32F205xx
STM32F207xx

ARM®-based 32-bit MCU, 150DMIPs, up to 1 MB Flash/128+4KB RAM, USB OTG HS/FS, Ethernet, 17 TIMs, 3 ADCs, 15 comm. interfaces & camera

Datasheet - production data

Features

- Core: ARM® 32-bit Cortex®-M3 CPU (120 MHz max) with Adaptive real-time accelerator (ART Accelerator™) allowing 0-wait state execution performance from Flash memory, MPU, 150 DMIPS/1.25 DMIPS/MHz (Dhrystone 2.1)
- Memories
  - Up to 1 Mbyte of Flash memory
  - 512 bytes of OTP memory
  - Up to 128 + 4 Kbytes of SRAM
  - Flexible static memory controller that supports Compact Flash, SRAM, PSRAM, NOR and NAND memories
  - LCD parallel interface, 8080/6800 modes
- Clock, reset and supply management
  - From 1.8 to 3.6 V application supply + I/Os
  - POR, PDR, PVD and BOR
  - 4 to 26 MHz crystal oscillator
  - Internal 16 MHz factory-trimmed RC
  - 32 kHz oscillator for RTC with calibration
  - Internal 32 kHz RC with calibration
- Low-power modes
  - Sleep, Stop and Standby modes
  - V_{BAT} supply for RTC, 20 × 32 bit backup registers, and optional 4 KB backup SRAM
- 3 × 12-bit, 0.5 µs ADCs with up to 24 channels and up to 6 MSPS in triple interleaved mode
- 2 × 12-bit D/A converters
- General-purpose DMA: 16-stream controller with centralized FIFOs and burst support
- Up to 17 timers
  - Up to twelve 16-bit and two 32-bit timers, up to 120 MHz, each with up to four IC/OC/PWM or pulse counter and quadrature (incremental) encoder input

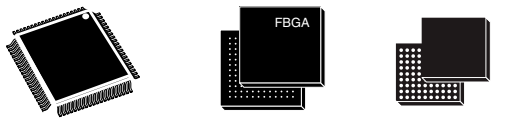

LQFP64 (10 × 10 mm) LQFP100 (14 × 14 mm) LQFP144 (20 × 20 mm) LQFP176 (24 × 24 mm)	UFBGA176 (10 × 10 mm)	WLCSP64+2 (0.400 mm pitch)

- Debug mode: Serial wire debug (SWD), JTAG, and Cortex®-M3 Embedded Trace Macrocell™
- Up to 140 I/O ports with interrupt capability:
  - Up to 136 fast I/Os up to 60 MHz
  - Up to 138 5 V-tolerant I/Os
- Up to 15 communication interfaces
  - Up to 3 × I^2C interfaces (SMBus/PMBus)
  - Up to four USARTs and two UARTs (7.5 Mbit/s, ISO 7816 interface, LIN, IrDA, modem control)
  - Up to three SPIs (30 Mbit/s), two with muxed I^2S to achieve audio class accuracy via audio PLL or external PLL
  - 2 × CAN interfaces (2.0B Active)
  - SDIO interface
- Advanced connectivity
  - USB 2.0 full-speed device/host/OTG controller with on-chip PHY
  - USB 2.0 high-speed/full-speed device/host/OTG controller with dedicated DMA, on-chip full-speed PHY and ULPI
  - 10/100 Ethernet MAC with dedicated DMA: supports IEEE 1588v2 hardware, MII/RMII
- 8- to 14-bit parallel camera interface (48 Mbyte/s max.)
- CRC calculation unit
- 96-bit unique ID

This is information on a product in full production. www.st.com

sales@prom-elec.com / ООО ПРОМЭЛЕКТРОНИКА

Table 1. Device summary

Reference	Part numbers
STM32F205xx	STM32F205RB, STM32F205RC, STM32F205RE, STM32F205RF, STM32F205RG STM32F205VB, STM32F205VC, STM32F205VE, STM32F205VF, STM32F205VG STM32F205ZC, STM32F205ZE, STM32F205ZF, STM32F205ZG
STM32F207xx	STM32F207IC, STM32F207IE, STM32F207IF, STM32F207IG STM32F207VC, STM32F207VE, STM32F207VF, STM32F207VG STM32F207ZC, STM32F207ZE, STM32F207ZF, STM32F207ZG

Contents

1 Introduction 13

2 Description 14

2.1 Full compatibility throughout the family 18

3 Functional overview 21

3.1 ARM® Cortex®-M3 core with embedded Flash and SRAM 21

3.2 Adaptive real-time memory accelerator (ART Accelerator™) 21

3.3 Memory protection unit 21

3.4 Embedded Flash memory 22

3.5 CRC (cyclic redundancy check) calculation unit 22

3.6 Embedded SRAM 22

3.7 Multi-AHB bus matrix 22

3.8 DMA controller (DMA) 23

3.9 Flexible static memory controller (FSMC) 24

3.10 Nested vectored interrupt controller (NVIC) 24

3.11 External interrupt/event controller (EXTI) 25

3.12 Clocks and startup 25

3.13 Boot modes 25

3.14 Power supply schemes 25

3.15 Power supply supervisor 26

3.16 Voltage regulator 26

3.16.1 Regulator ON 26

3.16.2 Regulator OFF 27

3.16.3 Regulator ON/OFF and internal reset ON/OFF availability 31

3.17 Real-time clock (RTC), backup SRAM and backup registers 31

3.18 Low-power modes 32

3.19 V_{BAT} operation 32

3.20 Timers and watchdogs 33

3.20.1 Advanced-control timers (TIM1, TIM8) 33

3.20.2 General-purpose timers (TIMx) 34

3.20.3 Basic timers TIM6 and TIM7 34

3.20.4 Independent watchdog . . . 35
3.20.5 Window watchdog . . . 35
3.20.6 SysTick timer . . . 35
3.21 Inter-integrated circuit interface (I²C) . . . 35
3.22 Universal synchronous/asynchronous receiver transmitters (UARTs/USARTs) . . . 35
3.23 Serial peripheral interface (SPI) . . . 36
3.24 Inter-integrated sound (I^2S) . . . 36
3.25 SDIO . . . 36
3.26 Ethernet MAC interface with dedicated DMA and IEEE 1588 support . . . 37
3.27 Controller area network (CAN) . . . 37
3.28 Universal serial bus on-the-go full-speed (OTG_FS) . . . 38
3.29 Universal serial bus on-the-go high-speed (OTG_HS) . . . 38
3.30 Audio PLL (PLLI2S) . . . 39
3.31 Digital camera interface (DCMI) . . . 39
3.32 True random number generator (RNG) . . . 39
3.33 GPIOs (general-purpose inputs/outputs) . . . 39
3.34 ADCs (analog-to-digital converters) . . . 40
3.35 DAC (digital-to-analog converter) . . . 40
3.36 Temperature sensor . . . 40
3.37 Serial wire JTAG debug port (SWJ-DP) . . . 41
3.38 Embedded Trace Macrocell™ . . . 41

4 Pinouts and pin description . . . 42

5 Memory mapping . . . 67

6 Electrical characteristics . . . 69
6.1 Parameter conditions . . . 69
6.1.1 Minimum and maximum values . . . 69
6.1.2 Typical values . . . 69
6.1.3 Typical curves . . . 69
6.1.4 Loading capacitor . . . 69
6.1.5 Pin input voltage . . . 69
6.1.6 Power supply scheme . . . 70

6.1.7 Current consumption measurement 71
6.2 Absolute maximum ratings 71
6.3 Operating conditions 72
6.3.1 General operating conditions 72
6.3.2 VCAP1/VCAP2 external capacitor 75
6.3.3 Operating conditions at power-up / power-down (regulator ON) 76
6.3.4 Operating conditions at power-up / power-down (regulator OFF) 76
6.3.5 Embedded reset and power control block characteristics 77
6.3.6 Supply current characteristics 78
6.3.7 Wakeup time from low-power mode 89
6.3.8 External clock source characteristics 90
6.3.9 Internal clock source characteristics 93
6.3.10 PLL characteristics 95
6.3.11 PLL spread spectrum clock generation (SSCG) characteristics 98
6.3.12 Memory characteristics 99
6.3.13 EMC characteristics 101
6.3.14 Absolute maximum ratings (electrical sensitivity) 103
6.3.15 I/O current injection characteristics 104
6.3.16 I/O port characteristics 105
6.3.17 NRST pin characteristics 110
6.3.18 TIM timer characteristics 111
6.3.19 Communications interfaces 112
6.3.20 12-bit ADC characteristics 125
6.3.21 DAC electrical characteristics 129
6.3.22 Temperature sensor characteristics 131
6.3.23 V_{BAT} monitoring characteristics 132
6.3.24 Embedded reference voltage 132
6.3.25 FSMC characteristics 132
6.3.26 Camera interface (DCMI) timing specifications 150
6.3.27 SD/SDIO MMC card host interface (SDIO) characteristics 150
6.3.28 RTC characteristics 151

7 Package information 152
7.1 LQFP64 package information 152
7.2 WLCSP64+2 package information 154
7.3 LQFP100 package information 156

7.4 LQFP144 package information 159
7.5 LQFP176 package information 163
7.6 UFBGA176+25 package information 166
7.7 Thermal characteristics 169

8 Ordering information 170

9 Revision history 171

List of tables

Table 1. Device summary . . . 2
Table 2. STM32F205xx features and peripheral counts . . . 15
Table 3. STM32F207xx features and peripheral counts . . . 16
Table 4. Regulator ON/OFF and internal reset ON/OFF availability . . . 31
Table 5. Timer feature comparison . . . 33
Table 6. USART feature comparison . . . 36
Table 7. Legend/abbreviations used in the pinout table . . . 46
Table 8. STM32F20x pin and ball definitions . . . 47
Table 9. FSMC pin definition . . . 58
Table 10. Alternate function mapping . . . 61
Table 11. Voltage characteristics . . . 71
Table 12. Current characteristics . . . 72
Table 13. Thermal characteristics . . . 72
Table 14. General operating conditions . . . 72
Table 15. Limitations depending on the operating power supply range . . . 74
Table 16. VCAP1/VCAP2 operating conditions . . . 75
Table 17. Operating conditions at power-up / power-down (regulator ON) . . . 76
Table 18. Operating conditions at power-up / power-down (regulator OFF) . . . 76
Table 19. Embedded reset and power control block characteristics . . . 77
Table 20. Typical and maximum current consumption in Run mode, code with data processing running from Flash memory (ART accelerator enabled) or RAM . . . 79
Table 21. Typical and maximum current consumption in Run mode, code with data processing running from Flash memory (ART accelerator disabled) . . . 80
Table 22. Typical and maximum current consumption in Sleep mode . . . 83
Table 23. Typical and maximum current consumptions in Stop mode . . . 85
Table 24. Typical and maximum current consumptions in Standby mode . . . 86
Table 25. Typical and maximum current consumptions in V_{BAT} mode . . . 86
Table 26. Peripheral current consumption . . . 87
Table 27. Low-power mode wakeup timings . . . 89
Table 28. High-speed external user clock characteristics . . . 90
Table 29. Low-speed external user clock characteristics . . . 90
Table 30. HSE 4-26 MHz oscillator characteristics . . . 92
Table 31. LSE oscillator characteristics (f_{LSE} = 32.768 kHz) . . . 93
Table 32. HSI oscillator characteristics . . . 93
Table 33. LSI oscillator characteristics . . . 94
Table 34. Main PLL characteristics . . . 95
Table 35. PLLI2S (audio PLL) characteristics . . . 96
Table 36. SSCG parameters constraint . . . 98
Table 37. Flash memory characteristics . . . 100
Table 38. Flash memory programming . . . 100
Table 39. Flash memory programming with V_{PP} . . . 101
Table 40. Flash memory endurance and data retention . . . 101
Table 41. EMS characteristics . . . 102
Table 42. EMI characteristics . . . 103
Table 43. ESD absolute maximum ratings . . . 103
Table 44. Electrical sensitivities . . . 104
Table 45. I/O current injection susceptibility . . . 104
Table 46. I/O static characteristics . . . 105

Table 47. Output voltage characteristics . . . 108
Table 48. I/O AC characteristics . . . 108
Table 49. NRST pin characteristics . . . 110
Table 50. Characteristics of TIMx connected to the APB1 domain . . . 111
Table 51. Characteristics of TIMx connected to the APB2 domain . . . 112
Table 52. I^2C characteristics . . . 113
Table 53. SCL frequency (f_{PCLK1}= 30 MHz.,V_{DD} = 3.3 V) . . . 114
Table 54. SPI characteristics . . . 115
Table 55. I^2S characteristics . . . 118
Table 56. USB OTG FS startup time . . . 120
Table 57. USB OTG FS DC electrical characteristics . . . 120
Table 58. USB OTG FS electrical characteristics . . . 121
Table 59. USB HS DC electrical characteristics . . . 121
Table 60. Clock timing parameters . . . 121
Table 61. ULPI timing . . . 122
Table 62. Ethernet DC electrical characteristics . . . 122
Table 63. Dynamics characteristics: Ethernet MAC signals for SMI . . . 123
Table 64. Dynamics characteristics: Ethernet MAC signals for RMII . . . 123
Table 65. Dynamics characteristics: Ethernet MAC signals for MII . . . 124
Table 66. ADC characteristics . . . 125
Table 67. ADC accuracy . . . 126
Table 68. DAC characteristics . . . 129
Table 69. Temperature sensor characteristics . . . 131
Table 70. V_{BAT} monitoring characteristics . . . 132
Table 71. Embedded internal reference voltage . . . 132
Table 72. Asynchronous non-multiplexed SRAM/PSRAM/NOR read timings . . . 133
Table 73. Asynchronous non-multiplexed SRAM/PSRAM/NOR write timings . . . 134
Table 74. Asynchronous multiplexed PSRAM/NOR read timings . . . 135
Table 75. Asynchronous multiplexed PSRAM/NOR write timings . . . 136
Table 76. Synchronous multiplexed NOR/PSRAM read timings . . . 138
Table 77. Synchronous multiplexed PSRAM write timings . . . 139
Table 78. Synchronous non-multiplexed NOR/PSRAM read timings . . . 140
Table 79. Synchronous non-multiplexed PSRAM write timings . . . 141
Table 80. Switching characteristics for PC Card/CF read and write cycles in attribute/common space . . . 146
Table 81. Switching characteristics for PC Card/CF read and write cycles in I/O space . . . 147
Table 82. Switching characteristics for NAND Flash read cycles . . . 149
Table 83. Switching characteristics for NAND Flash write cycles . . . 150
Table 84. DCMI characteristics . . . 150
Table 85. SD/MMC characteristics . . . 151
Table 86. RTC characteristics . . . 151
Table 87. LQFP64 - 64-pin, 10 x 10 mm low-profile quad flat package mechanical data . . . 152
Table 88. WLCSP64+2 - 66-ball, 4.539 x 4.911 mm, 0.4 mm pitch wafer level chip scale package mechanical data . . . 154
Table 89. WLCSP64 recommended PCB design rules (0.4 mm pitch) . . . 155
Table 90. LQPF100 - 100-pin, 14 x 14 mm low-profile quad flat package mechanical data . . . 156
Table 91. LQFP144 - 144-pin, 20 x 20 mm low-profile quad flat package mechanical data . . . 160
Table 92. LQFP176 - 176-pin, 24 x 24 mm low profile quad flat package mechanical data . . . 163

Table 93. UFBGA176+25, - 201-ball, 10 x 10 mm, 0.65 mm pitch, ultra fine pitch ball grid array package mechanical data 166
Table 94. UFBGA176+25 recommended PCB design rules (0.65 mm pitch BGA) 167
Table 95. Package thermal characteristics 169
Table 96. Ordering information scheme 170
Table 97. Document revision history 171

List of figures

Figure 1. Compatible board design between STM32F10x and STM32F2xx for LQFP64 package . . . 18
Figure 2. Compatible board design between STM32F10x and STM32F2xx for LQFP100 package . . . 19
Figure 3. Compatible board design between STM32F10x and STM32F2xx for LQFP144 package . . . 19
Figure 4. STM32F20x block diagram . . . 20
Figure 5. Multi-AHB matrix . . . 23
Figure 6. Regulator OFF/internal reset ON . . . 28
Figure 7. Regulator OFF/internal reset OFF . . . 29
Figure 8. Startup in regulator OFF: slow V_{DD} slope, power-down reset risen after V_{CAP_1}/V_{CAP_2} stabilization . . . 30
Figure 9. Startup in regulator OFF: fast V_{DD} slope, power-down reset risen before V_{CAP_1}/V_{CAP_2} stabilization . . . 30
Figure 10. STM32F20x LQFP64 pinout . . . 42
Figure 11. STM32F20x WLCSP64+2 ballout . . . 42
Figure 12. STM32F20x LQFP100 pinout . . . 43
Figure 13. STM32F20x LQFP144 pinout . . . 44
Figure 14. STM32F20x LQFP176 pinout . . . 45
Figure 15. STM32F20x UFBGA176 ballout . . . 46
Figure 16. Memory map . . . 68
Figure 17. Pin loading conditions . . . 69
Figure 18. Pin input voltage . . . 69
Figure 19. Power supply scheme . . . 70
Figure 20. Current consumption measurement scheme . . . 71
Figure 21. Number of wait states versus f_{CPU} and V_{DD} range . . . 75
Figure 22. External capacitor C_{EXT} . . . 75
Figure 23. Typical current consumption vs. temperature, Run mode, code with data processing running from RAM, and peripherals ON . . . 81
Figure 24. Typical current consumption vs. temperature, Run mode, code with data processing running from RAM, and peripherals OFF . . . 81
Figure 25. Typical current consumption vs. temperature, Run mode, code with data processing running from Flash, ART accelerator OFF, peripherals ON . . . 82
Figure 26. Typical current consumption vs. temperature, Run mode, code with data processing running from Flash, ART accelerator OFF, peripherals OFF . . . 82
Figure 27. Typical current consumption vs. temperature in Sleep mode, peripherals ON . . . 84
Figure 28. Typical current consumption vs. temperature in Sleep mode, peripherals OFF . . . 84
Figure 29. Typical current consumption vs. temperature in Stop mode . . . 85
Figure 30. High-speed external clock source AC timing diagram . . . 91
Figure 31. Low-speed external clock source AC timing diagram . . . 91
Figure 32. Typical application with an 8 MHz crystal . . . 92
Figure 33. Typical application with a 32.768 kHz crystal . . . 93
Figure 34. ACC_{HSI} versus temperature . . . 94
Figure 35. ACC_{LSI} versus temperature . . . 95
Figure 36. PLL output clock waveforms in center spread mode . . . 99
Figure 37. PLL output clock waveforms in down spread mode . . . 99

Figure 38. FT I/O input characteristics . . . 107
Figure 39. I/O AC characteristics definition . . . 110
Figure 40. Recommended NRST pin protection . . . 110
Figure 41. I^2C bus AC waveforms and measurement circuit . . . 114
Figure 42. SPI timing diagram - slave mode and CPHA = 0 . . . 116
Figure 43. SPI timing diagram - slave mode and CPHA = 1 . . . 116
Figure 44. SPI timing diagram - master mode . . . 117
Figure 45. I^2S slave timing diagram (Philips protocol)(1) . . . 119
Figure 46. I^2S master timing diagram (Philips protocol)(1) . . . 119
Figure 47. USB OTG FS timings: definition of data signal rise and fall time . . . 121
Figure 48. ULPI timing diagram . . . 122
Figure 49. Ethernet SMI timing diagram . . . 123
Figure 50. Ethernet RMII timing diagram . . . 123
Figure 51. Ethernet MII timing diagram . . . 124
Figure 52. ADC accuracy characteristics . . . 127
Figure 53. Typical connection diagram using the ADC . . . 127
Figure 54. Power supply and reference decoupling (V_{REF+} not connected to V_{DDA}) . . . 128
Figure 55. Power supply and reference decoupling (V_{REF+} connected to V_{DDA}) . . . 129
Figure 56. 12-bit buffered/non-buffered DAC . . . 131
Figure 57. Asynchronous non-multiplexed SRAM/PSRAM/NOR read waveforms . . . 133
Figure 58. Asynchronous non-multiplexed SRAM/PSRAM/NOR write waveforms . . . 134
Figure 59. Asynchronous multiplexed PSRAM/NOR read waveforms . . . 135
Figure 60. Asynchronous multiplexed PSRAM/NOR write waveforms . . . 136
Figure 61. Synchronous multiplexed NOR/PSRAM read timings . . . 138
Figure 62. Synchronous multiplexed PSRAM write timings . . . 139
Figure 63. Synchronous non-multiplexed NOR/PSRAM read timings . . . 140
Figure 64. Synchronous non-multiplexed PSRAM write timings . . . 141
Figure 65. PC Card/CompactFlash controller waveforms for common memory read access . . . 143
Figure 66. PC Card/CompactFlash controller waveforms for common memory write access . . . 143
Figure 67. PC Card/CompactFlash controller waveforms for attribute memory read access . . . 144
Figure 68. PC Card/CompactFlash controller waveforms for attribute memory write access . . . 145
Figure 69. PC Card/CompactFlash controller waveforms for I/O space read access . . . 145
Figure 70. PC Card/CompactFlash controller waveforms for I/O space write access . . . 146
Figure 71. NAND controller waveforms for read access . . . 148
Figure 72. NAND controller waveforms for write access . . . 148
Figure 73. NAND controller waveforms for common memory read access . . . 149
Figure 74. NAND controller waveforms for common memory write access . . . 149
Figure 75. SDIO high-speed mode . . . 150
Figure 76. SD default mode . . . 151
Figure 77. LQFP64 - 64-pin, 10 x 10 mm low-profile quad flat package outline . . . 152
Figure 78. LQFP64 - 64-pin, 10 x 10 mm low-profile quad flat package recommended footprint . . . 153
Figure 79. WLCSP64+2 - 66-ball, 3.639 x 3.971 mm, 0.4 mm pitch wafer level chip scale package outline . . . 154
Figure 80. WLCSP64+2 - 66-ball, 4.539 x 4.911 mm, 0.4 mm pitch wafer level chip scale package recommended footprint . . . 155
Figure 81. LQFP100 - 100-pin, 14 x 14 mm low-profile quad flat package outline . . . 156
Figure 82. LQFP100 - 100-pin, 14 x 14 mm low-profile quad flat recommended footprint . . . 157
Figure 83. LQFP100 marking (package top view) . . . 158
Figure 84. LQFP144 - 144-pin, 20 x 20 mm low-profile quad flat package outline . . . 159
Figure 85. LQFP144 - 144-pin,20 x 20 mm low-profile quad flat package

recommended footprint 161
Figure 86. LQFP144 marking (package top view) 162
Figure 87. LQFP176 - 176-pin, 24 x 24 mm low profile quad flat package outline 163
Figure 88. LQFP176 - 176-pin, 24 x 24 mm low profile quad flat package recommended footprint 165
Figure 89. UFBGA176+25 - 201-ball, 10 x 10 mm, 0.65 mm pitch, ultra fine pitch ball grid array package outline 166
Figure 90. UFBGA176+25 - 201-ball, 10 x 10 mm, 0.65 mm pitch, ultra fine pitch ball grid array package recommended footprint 167
Figure 91. UFBGA176+25 marking (package top view) 168

1 Introduction

This datasheet provides the description of the STM32F205xx and STM32F207xx lines of microcontrollers. For more details on the whole STMicroelectronics STM32 family, refer to *Section 2.1: Full compatibility throughout the family*.

The STM32F205xx and STM32F207xx datasheet should be read in conjunction with the STM32F20x/STM32F21x reference manual. They will be referred to as STM32F20x devices throughout the document.

For information on programming, erasing and protection of the internal Flash memory, refer to the STM32F20x/STM32F21x Flash programming manual (PM0059).

The reference and Flash programming manuals are both available from the STMicroelectronics website *www.st.com*.

For information on the Cortex®-M3 core refer to the Cortex®-M3 Technical Reference Manual, available from the *www.arm.com* website.

2 Description

The STM32F20x family is based on the high-performance ARM® Cortex®-M3 32-bit RISC core operating at a frequency of up to 120 MHz. The family incorporates high-speed embedded memories (Flash memory up to 1 Mbyte, up to 128 Kbytes of system SRAM), up to 4 Kbytes of backup SRAM, and an extensive range of enhanced I/Os and peripherals connected to two APB buses, three AHB buses and a 32-bit multi-AHB bus matrix.

The devices also feature an adaptive real-time memory accelerator (ART Accelerator™) that allows to achieve a performance equivalent to 0 wait state program execution from Flash memory at a CPU frequency up to 120 MHz. This performance has been validated using the CoreMark® benchmark.

All devices offer three 12-bit ADCs, two DACs, a low-power RTC, twelve general-purpose 16-bit timers including two PWM timers for motor control, two general-purpose 32-bit timers. a true number random generator (RNG). They also feature standard and advanced communication interfaces. New advanced peripherals include an SDIO, an enhanced flexible static memory control (FSMC) interface (for devices offered in packages of 100 pins and more), and a camera interface for CMOS sensors. The devices also feature standard peripherals.

- Up to three I^2Cs
- Three SPIs, two I^2Ss. To achieve audio class accuracy, the I^2S peripherals can be clocked via a dedicated internal audio PLL or via an external PLL to allow synchronization.
- Four USARTs and two UARTs
- A USB OTG high-speed with full-speed capability (with the ULPI)
- A second USB OTG (full-speed)
- Two CANs
- An SDIO interface
- Ethernet and camera interface available on STM32F207xx devices only.

Note: The STM32F205xx and STM32F207xx devices operate in the –40 to +105 °C temperature range from a 1.8 V to 3.6 V power supply. On devices in WLCSP64+2 package, if IRROFF is set to $V_{DD,}$ the supply voltage can drop to 1.7 V when the device operates in the 0 to 70 °C temperature range using an external power supply supervisor (see Section 3.16).

A comprehensive set of power-saving modes allow the design of low-power applications.

STM32F205xx and STM32F207xx devices are offered in various packages ranging from 64 pins to 176 pins. The set of included peripherals changes with the device chosen.These features make the STM32F205xx and STM32F207xx microcontroller family suitable for a wide range of applications:

- Motor drive and application control
- Medical equipment
- Industrial applications: PLC, inverters, circuit breakers
- Printers, and scanners
- Alarm systems, video intercom, and HVAC
- Home audio appliances

Figure 4 shows the general block diagram of the device family.

Table 2. STM32F205xx features and peripheral counts

Peripherals		STM32F205Rx					STM32F205Vx					STM32F205Zx			
Flash memory in Kbytes		128	256	512	768	1024	128	256	512	768	1024	256	512	768	1024
SRAM in Kbytes	System (SRAM1+SRAM2)	64 (48+16)	96 (80+16)	128 (112+16)			64 (48+16)	96 (80+16)	128 (112+16)			96 (80+16)	128 (112+16)		
	Backup	4					4					4			
FSMC memory controller		No					Yes(1)								
Ethernet		No													
Timers	General-purpose	10													
	Advanced-control	2													
	Basic	2													
	IWDG	Yes													
	WWDG	Yes													
RTC		Yes													
Random number generator		Yes													
Comm. interfaces	SPI/(I^2S)	3/(2)(2)													
	I^2C	3													
	USART UART	4 2													
	USB OTG FS	Yes													
	USB OTG HS	Yes													
	CAN	2													
Camera interface		No													
GPIOs		51					82					114			
SDIO		Yes													
12-bit ADC Number of channels		3													
		16					16					24			
12-bit DAC Number of channels		Yes 2													
Maximum CPU frequency		120 MHz													
Operating voltage		1.8 V to 3.6 V(3)													

Table 2. STM32F205xx features and peripheral counts (continued)

Peripherals	STM32F205Rx				STM32F205Vx	STM32F205Zx
Operating temperatures	Ambient temperatures: –40 to +85 °C /–40 to +105 °C					
	Junction temperature: –40 to + 125 °C					
Package	LQFP64	LQFP64 WLCSP64 +2	LQFP64	LQFP64 WLCSP64+2	LQFP100	LQFP144

1. For the LQFP100 package, only FSMC Bank1 or Bank2 are available. Bank1 can only support a multiplexed NOR/PSRAM memory using the NE1 Chip Select. Bank2 can only support a 16- or 8-bit NAND Flash memory using the NCE2 Chip Select. The interrupt line cannot be used since Port G is not available in this package.
2. The SPI2 and SPI3 interfaces give the flexibility to work in an exclusive way in either the SPI mode or the I2S audio mode.
3. On devices in WLCSP64+2 package, if IRROFF is set to V_{DD}, the supply voltage can drop to 1.7 V when the device operates in the 0 to 70 °C temperature range using an external power supply supervisor (see *Section 3.16*).

Table 3. STM32F207xx features and peripheral counts

Peripherals		STM32F207Vx				STM32F207Zx				STM32F207Ix			
Flash memory in Kbytes		256	512	768	1024	256	512	768	1024	256	512	768	1024
SRAM in Kbytes	System (SRAM1+SRAM2)	128 (112+16)											
	Backup	4											
FSMC memory controller		Yes(1)											
Ethernet		Yes											
Timers	General-purpose	10											
	Advanced-control	2											
	Basic	2											
	IWDG	Yes											
	WWDG	Yes											
RTC		Yes											
Random number generator		Yes											

Table 3. STM32F207xx features and peripheral counts (continued)

Peripherals		STM32F207Vx	STM32F207Zx	STM32F207Ix
Comm. interfaces	SPI/(I^2S)	3/(2)[2]		
	I^2C	3		
	USART UART	4 2		
	USB OTG FS	Yes		
	USB OTG HS	Yes		
	CAN	2		
Camera interface		Yes		
GPIOs		82	114	140
SDIO		Yes		
12-bit ADC Number of channels		3		
		16	24	24
12-bit DAC Number of channels		Yes 2		
Maximum CPU frequency		120 MHz		
Operating voltage		1.8 V to 3.6 V[3]		
Operating temperatures		Ambient temperatures: –40 to +85 °C/–40 to +105 °C		
		Junction temperature: –40 to + 125 °C		
Package		LQFP100	LQFP144	LQFP176/ UFBGA176

1. For the LQFP100 package, only FSMC Bank1 or Bank2 are available. Bank1 can only support a multiplexed NOR/PSRAM memory using the NE1 Chip Select. Bank2 can only support a 16- or 8-bit NAND Flash memory using the NCE2 Chip Select. The interrupt line cannot be used since Port G is not available in this package.
2. The SPI2 and SPI3 interfaces give the flexibility to work in an exclusive way in either the SPI mode or the I2S audio mode.
3. On devices in WLCSP64+2 package, if IRROFF is set to V_{DD}, the supply voltage can drop to 1.7 V when the device operates in the 0 to 70 °C temperature range using an external power supply supervisor (see *Section 3.16*).

2.1 Full compatibility throughout the family

The STM32F205xx and STM32F207xx constitute the STM32F20x family whose members are fully pin-to-pin, software and feature compatible, allowing the user to try different memory densities and peripherals for a greater degree of freedom during the development cycle.

The STM32F205xx and STM32F207xx devices maintain a close compatibility with the whole STM32F10xxx family. All functional pins are pin-to-pin compatible. The STM32F205xx and STM32F207xx, however, are not drop-in replacements for the STM32F10xxx devices: the two families do not have the same power scheme, and so their power pins are different. Nonetheless, transition from the STM32F10xxx to the STM32F20x family remains simple as only a few pins are impacted.

Figure 1, *Figure 2* and *Figure 3* provide compatible board designs between the STM32F20x and the STM32F10xxx family.

Figure 1. Compatible board design between STM32F10x and STM32F2xx for LQFP64 package

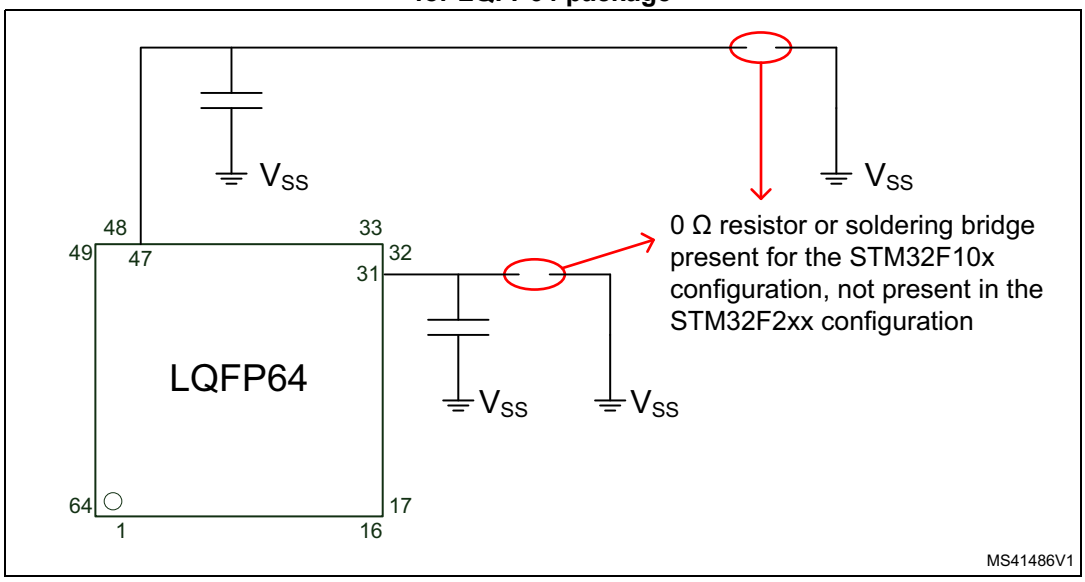

Figure 2. Compatible board design between STM32F10x and STM32F2xx for LQFP100 package

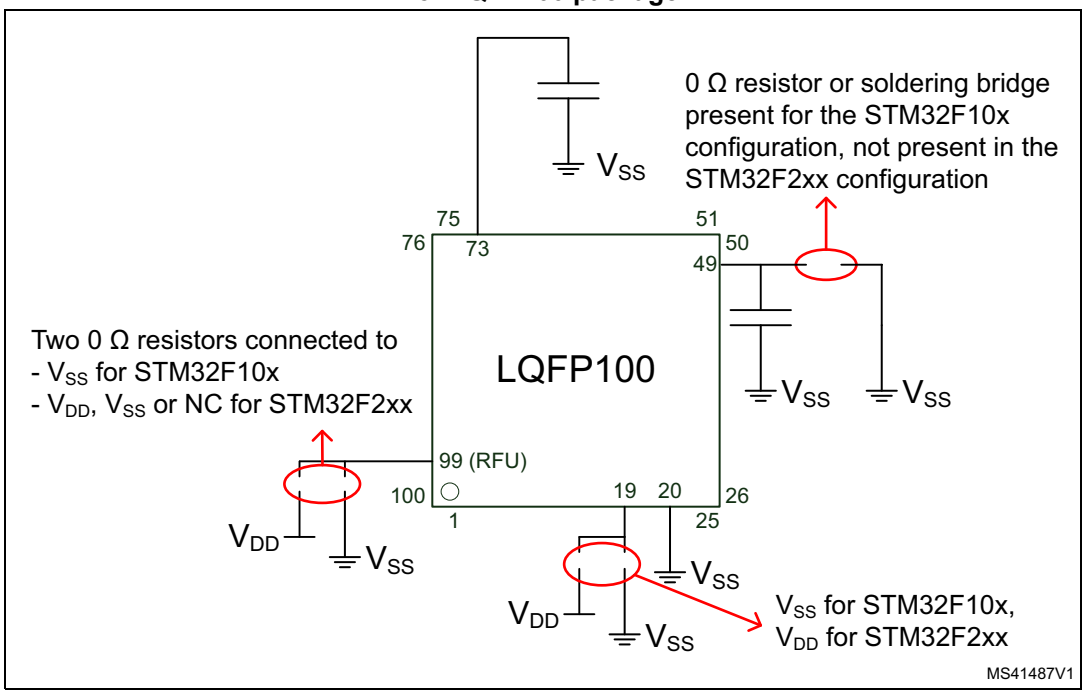

1. RFU = reserved for future use.

Figure 3. Compatible board design between STM32F10x and STM32F2xx for LQFP144 package

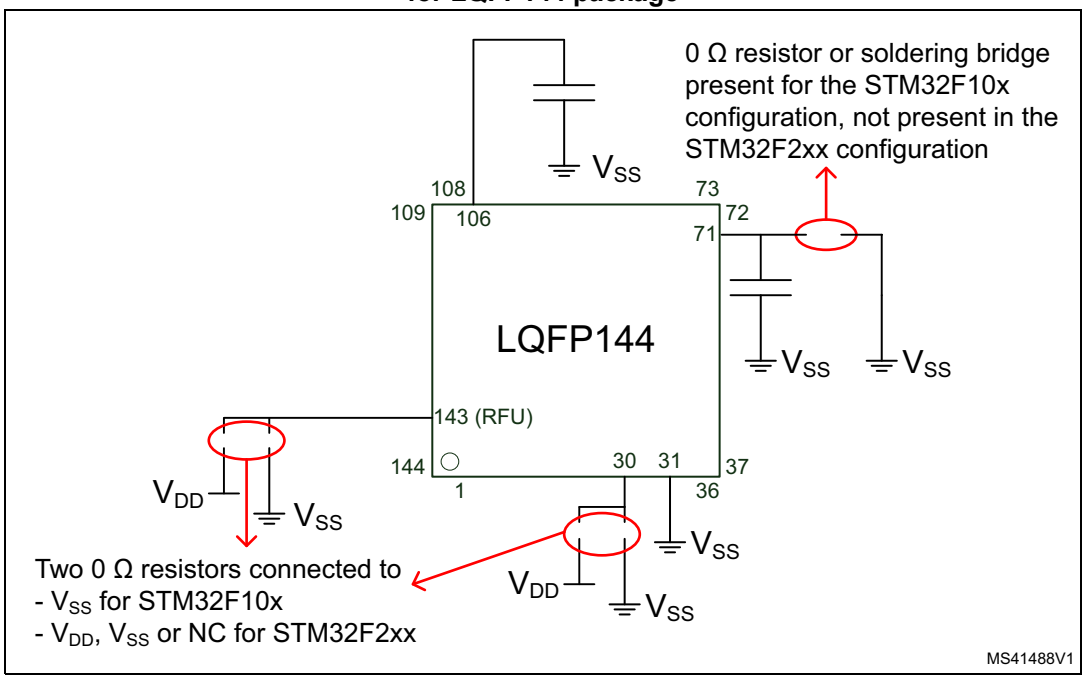

1. RFU = reserved for future use.

Figure 4. STM32F20x block diagram

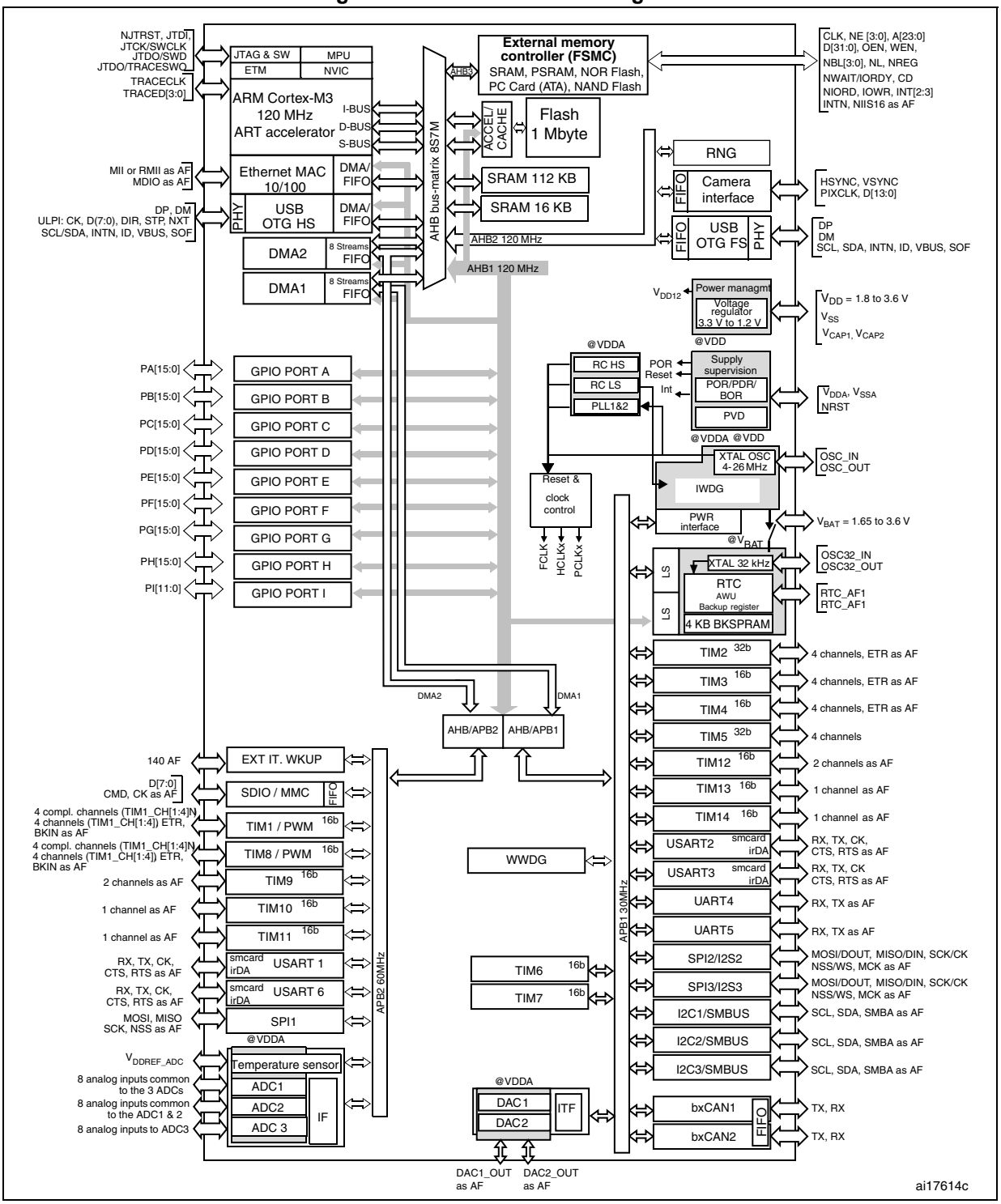

1. The timers connected to APB2 are clocked from TIMxCLK up to 120 MHz, while the timers connected to APB1 are clocked from TIMxCLK up to 60 MHz.
2. The camera interface and Ethernet are available only in STM32F207xx devices.

3 Functional overview

3.1 ARM® Cortex®-M3 core with embedded Flash and SRAM

The ARM® Cortex®-M3 processor is the latest generation of ARM processors for embedded systems. It was developed to provide a low-cost platform that meets the needs of MCU implementation, with a reduced pin count and low-power consumption, while delivering outstanding computational performance and an advanced response to interrupts.

The ARM® Cortex®-M3 32-bit RISC processor features exceptional code-efficiency, delivering the high-performance expected from an ARM core in the memory size usually associated with 8- and 16-bit devices.

With its embedded ARM® core, the STM32F20x family is compatible with all ARM® tools and software.

Figure 4 shows the general block diagram of the STM32F20x family.

3.2 Adaptive real-time memory accelerator (ART Accelerator™)

The ART Accelerator™ is a memory accelerator which is optimized for STM32 industry-standard ARM® Cortex®-M3 processors. It balances the inherent performance advantage of the ARM® Cortex®-M3 over Flash memory technologies, which normally requires the processor to wait for the Flash memory at higher operating frequencies.

To release the processor full 150 DMIPS performance at this frequency, the accelerator implements an instruction prefetch queue and branch cache which increases program execution speed from the 128-bit Flash memory. Based on CoreMark® benchmark, the performance achieved thanks to the ART accelerator is equivalent to 0 wait state program execution from Flash memory at a CPU frequency up to 120 MHz.

3.3 Memory protection unit

The memory protection unit (MPU) is used to manage the CPU accesses to memory to prevent one task to accidentally corrupt the memory or resources used by any other active task. This memory area is organized into up to 8 protected areas that can in turn be divided up into 8 subareas. The protection area sizes are between 32 bytes and the whole 4 gigabytes of addressable memory.

The MPU is especially helpful for applications where some critical or certified code has to be protected against the misbehavior of other tasks. It is usually managed by an RTOS (real-time operating system). If a program accesses a memory location that is prohibited by the MPU, the RTOS can detect it and take action. In an RTOS environment, the kernel can dynamically update the MPU area setting, based on the process to be executed.

The MPU is optional and can be bypassed for applications that do not need it.

3.4 Embedded Flash memory

The STM32F20x devices embed a 128-bit wide Flash memory of 128 Kbytes, 256 Kbytes, 512 Kbytes, 768 Kbytes or 1 Mbyte available for storing programs and data.

The devices also feature 512 bytes of OTP memory that can be used to store critical user data such as Ethernet MAC addresses or cryptographic keys.

3.5 CRC (cyclic redundancy check) calculation unit

The CRC (cyclic redundancy check) calculation unit is used to get a CRC code from a 32-bit data word and a fixed generator polynomial.

Among other applications, CRC-based techniques are used to verify data transmission or storage integrity. In the scope of the EN/IEC 60335-1 standard, they offer a means of verifying the Flash memory integrity. The CRC calculation unit helps compute a software signature during runtime, to be compared with a reference signature generated at link-time and stored at a given memory location.

3.6 Embedded SRAM

All STM32F20x products embed:

- Up to 128 Kbytes of system SRAM accessed (read/write) at CPU clock speed with 0 wait states
- 4 Kbytes of backup SRAM.

  The content of this area is protected against possible unwanted write accesses, and is retained in Standby or V_{BAT} mode.

3.7 Multi-AHB bus matrix

The 32-bit multi-AHB bus matrix interconnects all the masters (CPU, DMAs, Ethernet, USB HS) and the slaves (Flash memory, RAM, FSMC, AHB and APB peripherals) and ensures a seamless and efficient operation even when several high-speed peripherals work simultaneously.

Figure 5. Multi-AHB matrix

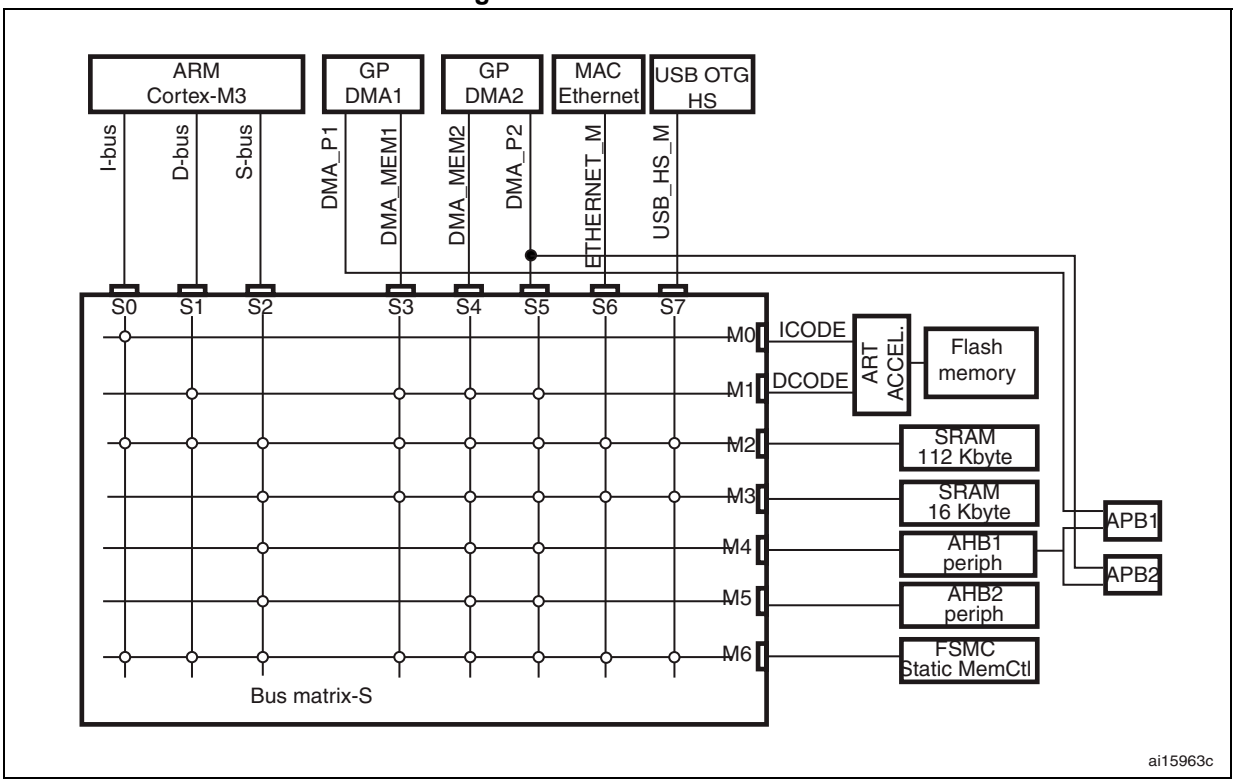

3.8 DMA controller (DMA)

The devices feature two general-purpose dual-port DMAs (DMA1 and DMA2) with 8 streams each. They are able to manage memory-to-memory, peripheral-to-memory and memory-to-peripheral transfers. They share some centralized FIFOs for APB/AHB peripherals, support burst transfer and are designed to provide the maximum peripheral bandwidth (AHB/APB).

The two DMA controllers support circular buffer management, so that no specific code is needed when the controller reaches the end of the buffer. The two DMA controllers also have a double buffering feature, which automates the use and switching of two memory buffers without requiring any special code.

Each stream is connected to dedicated hardware DMA requests, with support for software trigger on each stream. Configuration is made by software and transfer sizes between source and destination are independent.

The DMA can be used with the main peripherals:

- SPI and I^2S
- I^2C
- USART and UART
- General-purpose, basic and advanced-control timers TIMx
- DAC
- SDIO
- Camera interface (DCMI)
- ADC.

3.9 Flexible static memory controller (FSMC)

The FSMC is embedded in all STM32F20x devices. It has four Chip Select outputs supporting the following modes: PC Card/Compact Flash, SRAM, PSRAM, NOR Flash and NAND Flash.

Functionality overview:

- Write FIFO
- Code execution from external memory except for NAND Flash and PC Card
- Maximum frequency (f_{HCLK}) for external access is 60 MHz

LCD parallel interface

The FSMC can be configured to interface seamlessly with most graphic LCD controllers. It supports the Intel 8080 and Motorola 6800 modes, and is flexible enough to adapt to specific LCD interfaces. This LCD parallel interface capability makes it easy to build cost-effective graphic applications using LCD modules with embedded controllers or high performance solutions using external controllers with dedicated acceleration.

3.10 Nested vectored interrupt controller (NVIC)

The STM32F20x devices embed a nested vectored interrupt controller able to manage 16 priority levels, and handle up to 81 maskable interrupt channels plus the 16 interrupt lines of the Cortex®-M3.

The NVIC main features are the following:

- Closely coupled NVIC gives low-latency interrupt processing
- Interrupt entry vector table address passed directly to the core
- Closely coupled NVIC core interface
- Allows early processing of interrupts
- Processing of late arriving, higher-priority interrupts
- Support tail chaining
- Processor state automatically saved
- Interrupt entry restored on interrupt exit with no instruction overhead

This hardware block provides flexible interrupt management features with minimum interrupt latency.

3.11 External interrupt/event controller (EXTI)

The external interrupt/event controller consists of 23 edge-detector lines used to generate interrupt/event requests. Each line can be independently configured to select the trigger event (rising edge, falling edge, both) and can be masked independently. A pending register maintains the status of the interrupt requests. The EXTI can detect an external line with a pulse width shorter than the Internal APB2 clock period. Up to 140 GPIOs can be connected to the 16 external interrupt lines.

3.12 Clocks and startup

On reset the 16 MHz internal RC oscillator is selected as the default CPU clock. The 16 MHz internal RC oscillator is factory-trimmed to offer 1% accuracy. The application can then select as system clock either the RC oscillator or an external 4-26 MHz clock source. This clock is monitored for failure. If failure is detected, the system automatically switches back to the internal RC oscillator and a software interrupt is generated (if enabled). Similarly, full interrupt management of the PLL clock entry is available when necessary (for example if an indirectly used external oscillator fails).

The advanced clock controller clocks the core and all peripherals using a single crystal or oscillator. In particular, the ethernet and USB OTG FS peripherals can be clocked by the system clock.

Several prescalers and PLLs allow the configuration of the three AHB buses, the high-speed APB (APB2) and the low-speed APB (APB1) domains. The maximum frequency of the three AHB buses is 120 MHz and the maximum frequency the high-speed APB domains is 60 MHz. The maximum allowed frequency of the low-speed APB domain is 30 MHz.

The devices embed a dedicate PLL (PLLI2S) that allow them to achieve audio class performance. In this case, the I^2S master clock can generate all standard sampling frequencies from 8 kHz to 192 kHz.

3.13 Boot modes

At startup, boot pins are used to select one out of three boot options:

- Boot from user Flash
- Boot from system memory
- Boot from embedded SRAM

The boot loader is located in system memory. It is used to reprogram the Flash memory by using USART1 (PA9/PA10), USART3 (PC10/PC11 or PB10/PB11), CAN2 (PB5/PB13), USB OTG FS in Device mode (PA11/PA12) through DFU (device firmware upgrade).

3.14 Power supply schemes

- V_{DD} = 1.8 to 3.6 V: external power supply for I/Os and the internal regulator (when enabled), provided externally through V_{DD} pins. On devices in WLCSP64+2 package, if IRROFF is set to V_{DD}, the supply voltage can drop to 1.7 V when the device operates

in the 0 to 70 °C temperature range using an external power supply supervisor (see *Section 3.16*).

- V_{SSA}, V_{DDA} = 1.8 to 3.6 V: external analog power supplies for ADC, DAC, Reset blocks, RCs and PLL. V_{DDA} and V_{SSA} must be connected to V_{DD} and V_{SS}, respectively.
- V_{BAT} = 1.65 to 3.6 V: power supply for RTC, external clock, 32 kHz oscillator and backup registers (through power switch) when V_{DD} is not present.

Refer to *Figure 19: Power supply scheme* for more details.

3.15 Power supply supervisor

The devices have an integrated power-on reset (POR) / power-down reset (PDR) circuitry coupled with a Brownout reset (BOR) circuitry.

At power-on, POR/PDR is always active and ensures proper operation starting from 1.8 V. After the 1.8 V POR threshold level is reached, the option byte loading process starts, either to confirm or modify default BOR threshold levels, or to disable BOR permanently. Three BOR thresholds are available through option bytes.

The device remains in reset mode when V_{DD} is below a specified threshold, $V_{POR/PDR}$ or V_{BOR}, without the need for an external reset circuit. On devices in WLCSP64+2 package, the BOR, POR and PDR features can be disabled by setting IRROFF pin to V_{DD}. In this mode an external power supply supervisor is required (see *Section 3.16*).

The devices also feature an embedded programmable voltage detector (PVD) that monitors the V_{DD}/V_{DDA} power supply and compares it to the V_{PVD} threshold. An interrupt can be generated when V_{DD}/V_{DDA} drops below the V_{PVD} threshold and/or when V_{DD}/V_{DDA} is higher than the V_{PVD} threshold. The interrupt service routine can then generate a warning message and/or put the MCU into a safe state. The PVD is enabled by software.

3.16 Voltage regulator

The regulator has five operating modes:

- Regulator ON
  - Main regulator mode (MR)
  - Low-power regulator (LPR)
  - Power-down
- Regulator OFF
  - Regulator OFF/internal reset ON
  - Regulator OFF/internal reset OFF

3.16.1 Regulator ON

The regulator ON modes are activated by default on LQFP packages.On WLCSP64+2 package, they are activated by connecting both REGOFF and IRROFF pins to V_{SS}, while only REGOFF must be connected to V_{SS} on UFBGA176 package (IRROFF is not available).

V_{DD} minimum value is 1.8 V.

There are three power modes configured by software when the regulator is ON:

- MR is used in the nominal regulation mode
- LPR is used in Stop modes

  The LP regulator mode is configured by software when entering Stop mode.
- Power-down is used in Standby mode.

  The Power-down mode is activated only when entering Standby mode. The regulator output is in high impedance and the kernel circuitry is powered down, inducing zero consumption. The contents of the registers and SRAM are lost).

Two external ceramic capacitors should be connected on V_{CAP_1} and V_{CAP_2} pin. Refer to *Figure 19: Power supply scheme* and *Table 16: VCAP1/VCAP2 operating conditions*.

All packages have the regulator ON feature.

3.16.2 Regulator OFF

This feature is available only on packages featuring the REGOFF pin. The regulator is disabled by holding REGOFF high. The regulator OFF mode allows to supply externally a V12 voltage source through V_{CAP_1} and V_{CAP_2} pins.

The two 2.2 µF ceramic capacitors should be replaced by two 100 nF decoupling capacitors. Refer to *Figure 19: Power supply scheme*.

When the regulator is OFF, there is no more internal monitoring on V12. An external power supply supervisor should be used to monitor the V12 of the logic power domain. PA0 pin should be used for this purpose, and act as power-on reset on V12 power domain.

In regulator OFF mode, the following features are no more supported:

- PA0 cannot be used as a GPIO pin since it allows to reset the part of the 1.2 V logic power domain which is not reset by the NRST pin.
- As long as PA0 is kept low, the debug mode cannot be used at power-on reset. As a consequence, PA0 and NRST pins must be managed separately if the debug connection at reset or pre-reset is required.

Regulator OFF/internal reset ON

On WLCSP64+2 package, this mode is activated by connecting REGOFF pin to V_{DD} and IRROFF pin to V_{SS}. On UFBGA176 package, only REGOFF must be connected to V_{DD} (IRROFF not available). In this mode, V_{DD}/V_{DDA} minimum value is 1.8 V.

The regulator OFF/internal reset ON mode allows to supply externally a 1.2 V voltage source through V_{CAP_1} and V_{CAP_2} pins, in addition to V_{DD}.

Figure 6. Regulator OFF/internal reset ON

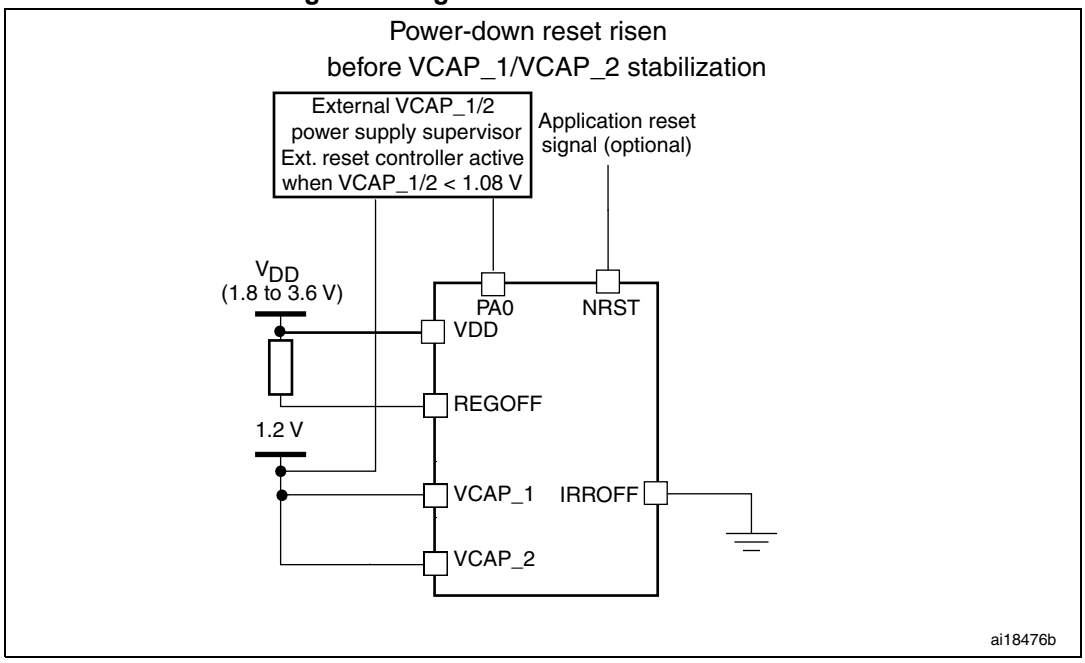

The following conditions must be respected:

- V_{DD} should always be higher than V_{CAP_1} and V_{CAP_2} to avoid current injection between power domains.
- If the time for V_{CAP_1} and V_{CAP_2} to reach 1.08 V is faster than the time for V_{DD} to reach 1.8 V, then PA0 should be kept low to cover both conditions: until V_{CAP_1} and V_{CAP_2} reach 1.08 V and until V_{DD} reaches 1.8 V (see *Figure 8*).
- Otherwise, If the time for V_{CAP_1} and V_{CAP_2} to reach 1.08 V is slower than the time for V_{DD} to reach 1.8 V, then PA0 should be asserted low externally (see *Figure 9*).
- If V_{CAP_1} and V_{CAP_2} go below 1.08 V and V_{DD} is higher than 1.8 V, then a reset must be asserted on PA0 pin.

Regulator OFF/internal reset OFF

On WLCSP64+2 package, this mode activated by connecting REGOFF to V_{SS} and IRROFF to V_{DD}. IRROFF cannot be activated in conjunction with REGOFF. This mode is available only on the WLCSP64+2 package. It allows to supply externally a 1.2 V voltage source through V_{CAP_1} and V_{CAP_2} pins. In this mode, the integrated power-on reset (POR)/ power-down reset (PDR) circuitry is disabled.

An external power supply supervisor should monitor both the external 1.2 V and the external V_{DD} supply voltage, and should maintain the device in reset mode as long as they remain below a specified threshold. The V_{DD} specified threshold, below which the device must be maintained under reset, is 1.8 V. This supply voltage can drop to 1.7 V when the device operates in the 0 to 70 °C temperature range. A comprehensive set of power-saving modes allows the design of low-power applications.

Figure 7. Regulator OFF/internal reset OFF

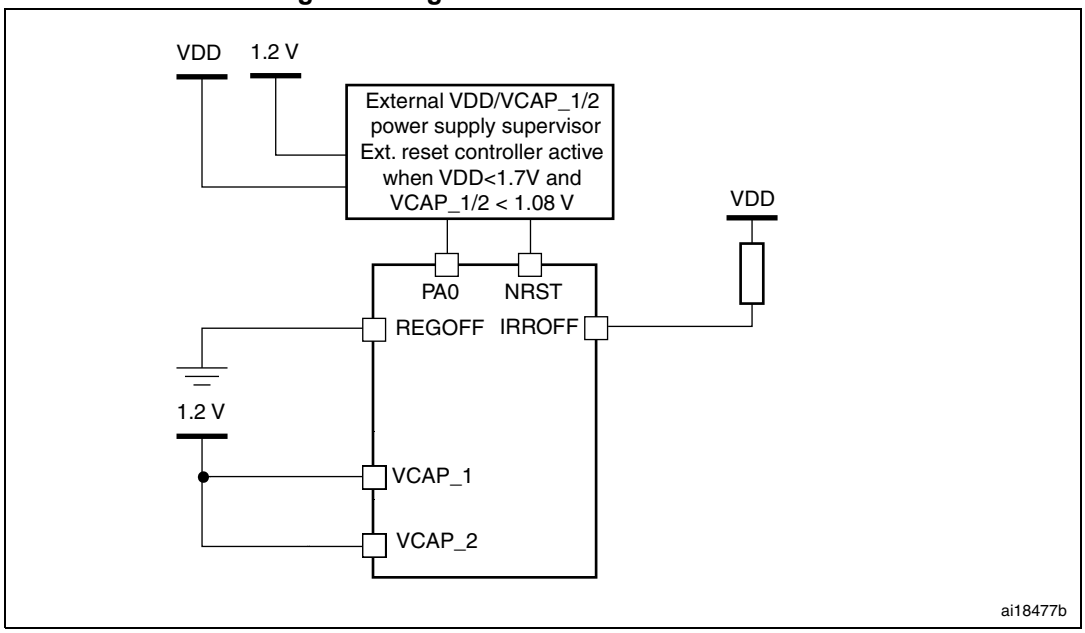

The following conditions must be respected:

- V_{DD} should always be higher than V_{CAP_1} and V_{CAP_2} to avoid current injection between power domains (see *Figure 8*).
- PA0 should be kept low to cover both conditions: until V_{CAP_1} and V_{CAP_2} reach 1.08 V, and until V_{DD} reaches 1.7 V.
- NRST should be controlled by an external reset controller to keep the device under reset when V_{DD} is below 1.7 V (see *Figure 9*).

In this mode, when the internal reset is OFF, the following integrated features are no more supported:

- The integrated power-on reset (POR) / power-down reset (PDR) circuitry is disabled.
- The brownout reset (BOR) circuitry is disabled.
- The embedded programmable voltage detector (PVD) is disabled.
- V_{BAT} functionality is no more available and V_{BAT} pin should be connected to VDD.

Figure 8. Startup in regulator OFF: slow V_{DD} slope, power-down reset risen after V_{CAP_1}/V_{CAP_2} stabilization

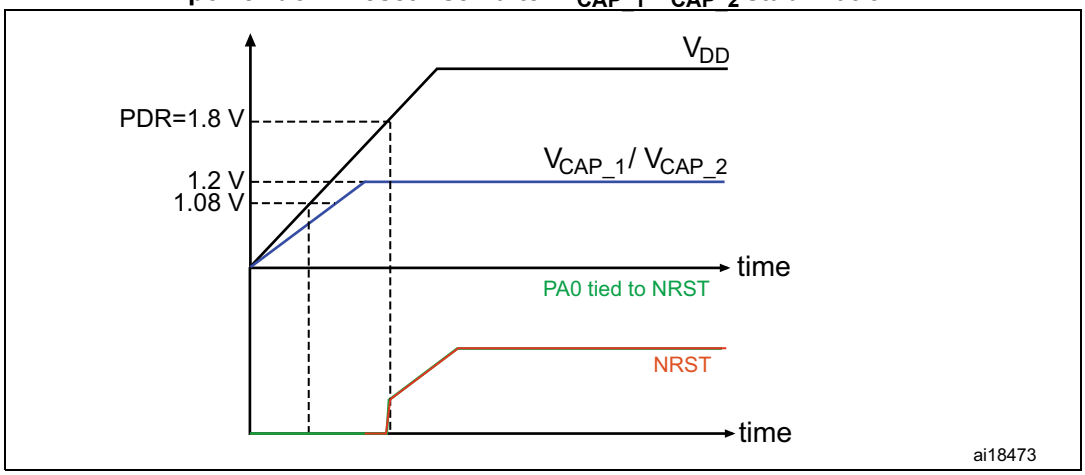

1. This figure is valid both whatever the internal reset mode (ON or OFF).

Figure 9. Startup in regulator OFF: fast V_{DD} slope, power-down reset risen before V_{CAP_1}/V_{CAP_2} stabilization

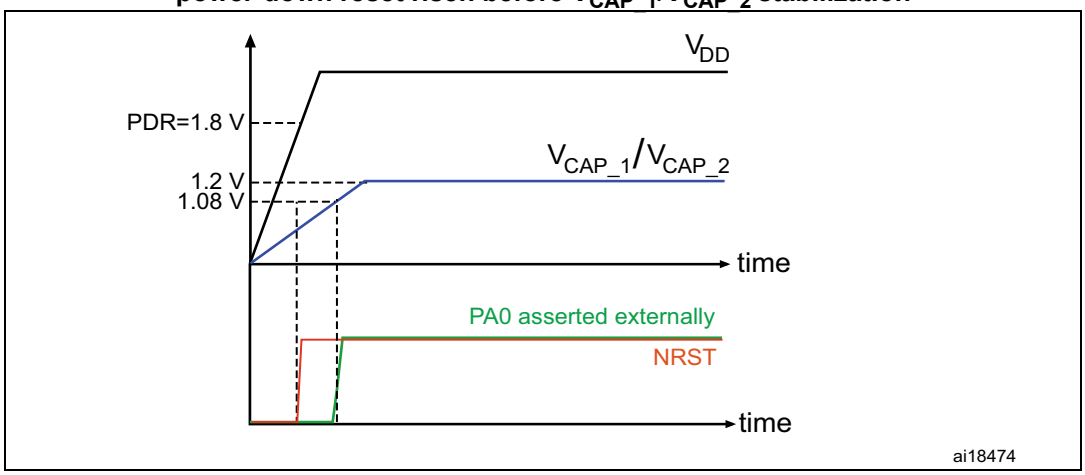

3.16.3 Regulator ON/OFF and internal reset ON/OFF availability

Table 4. Regulator ON/OFF and internal reset ON/OFF availability

Package	Regulator ON/internal reset ON	Regulator OFF/internal reset ON	Regulator OFF/internal reset OFF
LQFP64 LQFP100 LQFP144 LQFP176	Yes	No	No
WLCSP 64+2	Yes REGOFF and IRROFF set to V_{SS}	Yes REGOFF set to V_{DD} and IRROFF set to V_{SS}	Yes REGOFF set to V_{SS} and IRROFF set to V_{DD}
UFBGA176	Yes REGOFF set to V_{SS}	Yes REGOFF set to V_{DD}	No

3.17 Real-time clock (RTC), backup SRAM and backup registers

The backup domain of the STM32F20x devices includes:

- The real-time clock (RTC)
- 4 Kbytes of backup SRAM
- 20 backup registers

The real-time clock (RTC) is an independent BCD timer/counter. Its main features are the following:

- Dedicated registers contain the second, minute, hour (in 12/24 hour), week day, date, month, year, in BCD (binary-coded decimal) format.
- Automatic correction for 28, 29 (leap year), 30, and 31 day of the month.
- Programmable alarm and programmable periodic interrupts with wakeup from Stop and Standby modes.
- It is clocked by a 32.768 kHz external crystal, resonator or oscillator, the internal low-power RC oscillator or the high-speed external clock divided by 128. The internal low-speed RC has a typical frequency of 32 kHz. The RTC can be calibrated using an external 512 Hz output to compensate for any natural quartz deviation.
- Two alarm registers are used to generate an alarm at a specific time and calendar fields can be independently masked for alarm comparison. To generate a periodic interrupt, a 16-bit programmable binary auto-reload downcounter with programmable resolution is available and allows automatic wakeup and periodic alarms from every 120 µs to every 36 hours.
- A 20-bit prescaler is used for the time base clock. It is by default configured to generate a time base of 1 second from a clock at 32.768 kHz.
- Reference clock detection: a more precise second source clock (50 or 60 Hz) can be used to enhance the calendar precision.

The 4-Kbyte backup SRAM is an EEPROM-like area.It can be used to store data which need to be retained in VBAT and standby mode.This memory area is disabled to minimize power consumption (see *Section 3.18: Low-power modes*). It can be enabled by software.

The backup registers are 32-bit registers used to store 80 bytes of user application data when V_{DD} power is not present. Backup registers are not reset by a system, a power reset, or when the device wakes up from the Standby mode (see *Section 3.18: Low-power modes*).

Like backup SRAM, the RTC and backup registers are supplied through a switch that is powered either from the V_{DD} supply when present or the V_{BAT} pin.

3.18 Low-power modes

The STM32F20x family supports three low-power modes to achieve the best compromise between low-power consumption, short startup time and available wakeup sources:

- **Sleep mode**

  In Sleep mode, only the CPU is stopped. All peripherals continue to operate and can wake up the CPU when an interrupt/event occurs.

- **Stop mode**

  The Stop mode achieves the lowest power consumption while retaining the contents of SRAM and registers. All clocks in the 1.2 V domain are stopped, the PLL, the HSI RC and the HSE crystal oscillators are disabled. The voltage regulator can also be put either in normal or in low-power mode.

  The device can be woken up from the Stop mode by any of the EXTI line. The EXTI line source can be one of the 16 external lines, the PVD output, the RTC alarm / wakeup / tamper / time stamp events, the USB OTG FS/HS wakeup or the Ethernet wakeup.

- **Standby mode**

  The Standby mode is used to achieve the lowest power consumption. The internal voltage regulator is switched off so that the entire 1.2 V domain is powered off. The PLL, the HSI RC and the HSE crystal oscillators are also switched off. After entering Standby mode, the SRAM and register contents are lost except for registers in the backup domain and the backup SRAM when selected.

  The device exits the Standby mode when an external reset (NRST pin), an IWDG reset, a rising edge on the WKUP pin, or an RTC alarm / wakeup / tamper /time stamp event occurs.

Note: The RTC, the IWDG, and the corresponding clock sources are not stopped when the device enters the Stop or Standby mode.

3.19 V_{BAT} operation

The V_{BAT} pin allows to power the device V_{BAT} domain from an external battery or an external supercapacitor.

V_{BAT} operation is activated when V_{DD} is not present.

The V_{BAT} pin supplies the RTC, the backup registers and the backup SRAM.

Note: When the microcontroller is supplied from V_{BAT}, external interrupts and RTC alarm/events do not exit it from V_{BAT} operation.

When using WLCSP64+2 package, if IRROFF pin is connected to V_{DD}, the V_{BAT} functionality is no more available and V_{BAT} pin should be connected to V_{DD}.

3.20 Timers and watchdogs

The STM32F20x devices include two advanced-control timers, eight general-purpose timers, two basic timers and two watchdog timers.

All timer counters can be frozen in debug mode.

Table 5 compares the features of the advanced-control, general-purpose and basic timers.

Table 5. Timer feature comparison

Timer type	Timer	Counter resolution	Counter type	Prescaler factor	DMA request generation	Capture/ compare channels	Complementary output	Max interface clock	Max timer clock
Advanced-control	TIM1, TIM8	16-bit	Up, Down, Up/down	Any integer between 1 and 65536	Yes	4	Yes	60 MHz	120 MHz
General purpose	TIM2, TIM5	32-bit	Up, Down, Up/down	Any integer between 1 and 65536	Yes	4	No	30 MHz	60 MHz
	TIM3, TIM4	16-bit	Up, Down, Up/down	Any integer between 1 and 65536	Yes	4	No	30 MHz	60 MHz
Basic	TIM6, TIM7	16-bit	Up	Any integer between 1 and 65536	Yes	0	No	30 MHz	60 MHz
General purpose	TIM9	16-bit	Up	Any integer between 1 and 65536	No	2	No	60 MHz	120 MHz
	TIM10, TIM11	16-bit	Up	Any integer between 1 and 65536	No	1	No	60 MHz	120 MHz
	TIM12	16-bit	Up	Any integer between 1 and 65536	No	2	No	30 MHz	60 MHz
	TIM13, TIM14	16-bit	Up	Any integer between 1 and 65536	No	1	No	30 MHz	60 MHz

3.20.1 Advanced-control timers (TIM1, TIM8)

The advanced-control timers (TIM1, TIM8) can be seen as three-phase PWM generators multiplexed on 6 channels. They have complementary PWM outputs with programmable inserted dead times. They can also be considered as complete general-purpose timers. Their 4 independent channels can be used for:

- Input capture
- Output compare
- PWM generation (edge- or center-aligned modes)
- One-pulse mode output

If configured as standard 16-bit timers, they have the same features as the general-purpose TIMx timers. If configured as 16-bit PWM generators, they have full modulation capability (0-100%).

The TIM1 and TIM8 counters can be frozen in debug mode. Many of the advanced-control timer features are shared with those of the standard TIMx timers which have the same architecture. The advanced-control timer can therefore work together with the TIMx timers via the Timer Link feature for synchronization or event chaining.

3.20.2 General-purpose timers (TIMx)

There are ten synchronizable general-purpose timers embedded in the STM32F20x devices (see *Table 5* for differences).

TIM2, TIM3, TIM4, TIM5

The STM32F20x include 4 full-featured general-purpose timers. TIM2 and TIM5 are 32-bit timers, and TIM3 and TIM4 are 16-bit timers. The TIM2 and TIM5 timers are based on a 32-bit auto-reload up/downcounter and a 16-bit prescaler. The TIM3 and TIM4 timers are based on a 16-bit auto-reload up/downcounter and a 16-bit prescaler. They all feature 4 independent channels for input capture/output compare, PWM or one-pulse mode output. This gives up to 16 input capture/output compare/PWMs on the largest packages.

The TIM2, TIM3, TIM4, TIM5 general-purpose timers can work together, or with the other general-purpose timers and the advanced-control timers TIM1 and TIM8 via the Timer Link feature for synchronization or event chaining.

The counters of TIM2, TIM3, TIM4, TIM5 can be frozen in debug mode. Any of these general-purpose timers can be used to generate PWM outputs.

TIM2, TIM3, TIM4, TIM5 all have independent DMA request generation. They are capable of handling quadrature (incremental) encoder signals and the digital outputs from 1 to 4 hall-effect sensors.

TIM10, TIM11 and TIM9

These timers are based on a 16-bit auto-reload upcounter and a 16-bit prescaler. TIM10 and TIM11 feature one independent channel, whereas TIM9 has two independent channels for input capture/output compare, PWM or one-pulse mode output. They can be synchronized with the TIM2, TIM3, TIM4, TIM5 full-featured general-purpose timers. They can also be used as simple time bases.

TIM12, TIM13 and TIM14

These timers are based on a 16-bit auto-reload upcounter and a 16-bit prescaler. TIM13 and TIM14 feature one independent channel, whereas TIM12 has two independent channels for input capture/output compare, PWM or one-pulse mode output. They can be synchronized with the TIM2, TIM3, TIM4, TIM5 full-featured general-purpose timers.

They can also be used as simple time bases.

3.20.3 Basic timers TIM6 and TIM7

These timers are mainly used for DAC trigger and waveform generation. They can also be used as a generic 16-bit time base.

3.20.4 Independent watchdog

The independent watchdog is based on a 12-bit downcounter and 8-bit prescaler. It is clocked from an independent 32 kHz internal RC and as it operates independently from the main clock, it can operate in Stop and Standby modes. It can be used either as a watchdog to reset the device when a problem occurs, or as a free-running timer for application timeout management. It is hardware- or software-configurable through the option bytes.
The counter can be frozen in debug mode.

3.20.5 Window watchdog

The window watchdog is based on a 7-bit downcounter that can be set as free-running. It can be used as a watchdog to reset the device when a problem occurs. It is clocked from the main clock. It has an early warning interrupt capability and the counter can be frozen in debug mode.

3.20.6 SysTick timer

This timer is dedicated to real-time operating systems, but could also be used as a standard downcounter. It features:

- A 24-bit downcounter
- Autoreload capability
- Maskable system interrupt generation when the counter reaches 0
- Programmable clock source

3.21 Inter-integrated circuit interface (I^2C)

Up to three I^2C bus interfaces can operate in multimaster and slave modes. They can support the Standard- and Fast-modes. They support the 7/10-bit addressing mode and the 7-bit dual addressing mode (as slave). A hardware CRC generation/verification is embedded.

They can be served by DMA and they support SMBus 2.0/PMBus.

3.22 Universal synchronous/asynchronous receiver transmitters (UARTs/USARTs)

The STM32F20x devices embed four universal synchronous/asynchronous receiver transmitters (USART1, USART2, USART3 and USART6) and two universal asynchronous receiver transmitters (UART4 and UART5).

These six interfaces provide asynchronous communication, IrDA SIR ENDEC support, multiprocessor communication mode, single-wire half-duplex communication mode and have LIN Master/Slave capability. The USART1 and USART6 interfaces are able to communicate at speeds of up to 7.5 Mbit/s. The other available interfaces communicate at up to 3.75 Mbit/s.

USART1, USART2, USART3 and USART6 also provide hardware management of the CTS and RTS signals, Smart Card mode (ISO 7816 compliant) and SPI-like communication capability. All interfaces can be served by the DMA controller.

Table 6. USART feature comparison

USART name	Standard features	Modem (RTS/CTS)	LIN	SPI master	irDA	Smartcard (ISO 7816)	Max baud rate in Mbit/s (oversampling by 16)	Max baud rate in Mbit/s (oversampling by 8)	APB mapping
USART1	X	X	X	X	X	X	1.87	7.5	APB2 (max. 60 MHz)
USART2	X	X	X	X	X	X	1.87	3.75	APB1 (max. 30 MHz)
USART3	X	X	X	X	X	X	1.87	3.75	APB1 (max. 30 MHz)
UART4	X	-	X	-	X	-	1.87	3.75	APB1 (max. 30 MHz)
UART5	X	-	X	-	X	-	3.75	3.75	APB1 (max. 30 MHz)
USART6	X	X	X	X	X	X	3.75	7.5	APB2 (max. 60 MHz)

3.23 Serial peripheral interface (SPI)

The STM32F20x devices feature up to three SPIs in slave and master modes in full-duplex and simplex communication modes. SPI1 can communicate at up to 30 Mbits/s, while SPI2 and SPI3 can communicate at up to 15 Mbit/s. The 3-bit prescaler gives 8 master mode frequencies and the frame is configurable to 8 bits or 16 bits. The hardware CRC generation/verification supports basic SD Card/MMC modes. All SPIs can be served by the DMA controller.

The SPI interface can be configured to operate in TI mode for communications in master mode and slave mode.

3.24 Inter-integrated sound (I^2S)

Two standard I^2S interfaces (multiplexed with SPI2 and SPI3) are available. They can operate in master or slave mode, in half-duplex communication modes, and can be configured to operate with a 16-/32-bit resolution as input or output channels. Audio sampling frequencies from 8 kHz up to 192 kHz are supported. When either or both of the I^2S interfaces is/are configured in master mode, the master clock can be output to the external DAC/CODEC at 256 times the sampling frequency.

All I2Sx interfaces can be served by the DMA controller.

3.25 SDIO

An SD/SDIO/MMC host interface is available, that supports MultiMediaCard System Specification Version 4.2 in three different databus modes: 1-bit (default), 4-bit and 8-bit.

The interface allows data transfer at up to 48 MHz in 8-bit mode, and is compliant with the SD Memory Card Specification Version 2.0.

The SDIO Card Specification Version 2.0 is also supported with two different databus modes: 1-bit (default) and 4-bit.

The current version supports only one SD/SDIO/MMC4.2 card at any one time and a stack of MMC4.1 or previous.

In addition to SD/SDIO/MMC, this interface is fully compliant with the CE-ATA digital protocol Rev1.1.

3.26 Ethernet MAC interface with dedicated DMA and IEEE 1588 support

Peripheral available only on the STM32F207xx devices.

The STM32F207xx devices provide an IEEE-802.3-2002-compliant media access controller (MAC) for ethernet LAN communications through an industry-standard medium-independent interface (MII) or a reduced medium-independent interface (RMII). The STM32F207xx requires an external physical interface device (PHY) to connect to the physical LAN bus (twisted-pair, fiber, etc.). the PHY is connected to the STM32F207xx MII port using 17 signals for MII or 9 signals for RMII, and can be clocked using the 25 MHz (MII) or 50 MHz (RMII) output from the STM32F207xx.

The STM32F207xx includes the following features:

- Supports 10 and 100 Mbit/s rates
- Dedicated DMA controller allowing high-speed transfers between the dedicated SRAM and the descriptors (see the STM32F20x and STM32F21x reference manual for details)
- Tagged MAC frame support (VLAN support)
- Half-duplex (CSMA/CD) and full-duplex operation
- MAC control sublayer (control frames) support
- 32-bit CRC generation and removal
- Several address filtering modes for physical and multicast address (multicast and group addresses)
- 32-bit status code for each transmitted or received frame
- Internal FIFOs to buffer transmit and receive frames. The transmit FIFO and the receive FIFO are both 2 Kbytes, that is 4 Kbytes in total
- Supports hardware PTP (precision time protocol) in accordance with IEEE 1588 2008 (PTP V2) with the time stamp comparator connected to the TIM2 input
- Triggers interrupt when system time becomes greater than target time

3.27 Controller area network (CAN)

The two CANs are compliant with the 2.0A and B (active) specifications with a bitrate up to 1 Mbit/s. They can receive and transmit standard frames with 11-bit identifiers as well as extended frames with 29-bit identifiers. Each CAN has three transmit mailboxes, two receive FIFOS with 3 stages and 28 shared scalable filter banks (all of them can be used even if one

CAN is used). The 256 bytes of SRAM which are allocated for each CAN are not shared with any other peripheral.

3.28 Universal serial bus on-the-go full-speed (OTG_FS)

The devices embed an USB OTG full-speed device/host/OTG peripheral with integrated transceivers. The USB OTG FS peripheral is compliant with the USB 2.0 specification and with the OTG 1.0 specification. It has software-configurable endpoint setting and supports suspend/resume. The USB OTG full-speed controller requires a dedicated 48 MHz clock that is generated by a PLL connected to the HSE oscillator. The major features are:

- Combined Rx and Tx FIFO size of 320 × 35 bits with dynamic FIFO sizing
- Supports the session request protocol (SRP) and host negotiation protocol (HNP)
- 4 bidirectional endpoints
- 8 host channels with periodic OUT support
- HNP/SNP/IP inside (no need for any external resistor)
- For OTG/Host modes, a power switch is needed in case bus-powered devices are connected
- Internal FS OTG PHY support

3.29 Universal serial bus on-the-go high-speed (OTG_HS)

The STM32F20x devices embed a USB OTG high-speed (up to 480 Mb/s) device/host/OTG peripheral. The USB OTG HS supports both full-speed and high-speed operations. It integrates the transceivers for full-speed operation (12 MB/s) and features a UTMI low-pin interface (ULPI) for high-speed operation (480 MB/s). When using the USB OTG HS in HS mode, an external PHY device connected to the ULPI is required.

The USB OTG HS peripheral is compliant with the USB 2.0 specification and with the OTG 1.0 specification. It has software-configurable endpoint setting and supports suspend/resume. The USB OTG full-speed controller requires a dedicated 48 MHz clock that is generated by a PLL connected to the HSE oscillator. The major features are:

- Combined Rx and Tx FIFO size of 1024× 35 bits with dynamic FIFO sizing
- Supports the session request protocol (SRP) and host negotiation protocol (HNP)
- 6 bidirectional endpoints
- 12 host channels with periodic OUT support
- Internal FS OTG PHY support
- External HS or HS OTG operation supporting ULPI in SDR mode. The OTG PHY is connected to the microcontroller ULPI port through 12 signals. It can be clocked using the 60 MHz output.
- Internal USB DMA
- HNP/SNP/IP inside (no need for any external resistor)
- For OTG/Host modes, a power switch is needed in case bus-powered devices are connected

3.30 Audio PLL (PLLI2S)

The devices feature an additional dedicated PLL for audio I^2S application. It allows to achieve error-free I^2S sampling clock accuracy without compromising on the CPU performance, while using USB peripherals.

The PLLI2S configuration can be modified to manage an I^2S sample rate change without disabling the main PLL (PLL) used for CPU, USB and Ethernet interfaces.

The audio PLL can be programmed with very low error to obtain sampling rates ranging from 8 kHz to 192 kHz.

In addition to the audio PLL, a master clock input pin can be used to synchronize the I2S flow with an external PLL (or Codec output).

3.31 Digital camera interface (DCMI)

The camera interface is not available in STM32F205xx devices.

STM32F207xx products embed a camera interface that can connect with camera modules and CMOS sensors through an 8-bit to 14-bit parallel interface, to receive video data. The camera interface can sustain up to 27 Mbyte/s at 27 MHz or 48 Mbyte/s at 48 MHz. It features:

- Programmable polarity for the input pixel clock and synchronization signals
- Parallel data communication can be 8-, 10-, 12- or 14-bit
- Supports 8-bit progressive video monochrome or raw Bayer format, YCbCr 4:2:2 progressive video, RGB 565 progressive video or compressed data (like JPEG)
- Supports continuous mode or snapshot (a single frame) mode
- Capability to automatically crop the image

3.32 True random number generator (RNG)

All STM32F2xxx products embed a true RNG that delivers 32-bit random numbers produced by an integrated analog circuit.

3.33 GPIOs (general-purpose inputs/outputs)

Each of the GPIO pins can be configured by software as output (push-pull or open-drain, with or without pull-up or pull-down), as input (floating, with or without pull-up or pull-down) or as peripheral alternate function. Most of the GPIO pins are shared with digital or analog alternate functions. All GPIOs are high-current-capable and have speed selection to better manage internal noise, power consumption and electromagnetic emission.

The I/O alternate function configuration can be locked if needed by following a specific sequence in order to avoid spurious writing to the I/Os registers.

To provide fast I/O handling, the GPIOs are on the fast AHB1 bus with a clock up to 120 MHz that leads to a maximum I/O toggling speed of 60 MHz.

3.34 ADCs (analog-to-digital converters)

Three 12-bit analog-to-digital converters are embedded and each ADC shares up to 16 external channels, performing conversions in the single-shot or scan mode. In scan mode, automatic conversion is performed on a selected group of analog inputs.

Additional logic functions embedded in the ADC interface allow:

- Simultaneous sample and hold
- Interleaved sample and hold

The ADC can be served by the DMA controller. An analog watchdog feature allows very precise monitoring of the converted voltage of one, some or all selected channels. An interrupt is generated when the converted voltage is outside the programmed thresholds.

The events generated by the timers TIM1, TIM2, TIM3, TIM4, TIM5 and TIM8 can be internally connected to the ADC start trigger and injection trigger, respectively, to allow the application to synchronize A/D conversion and timers.

3.35 DAC (digital-to-analog converter)

The two 12-bit buffered DAC channels can be used to convert two digital signals into two analog voltage signal outputs. The design structure is composed of integrated resistor strings and an amplifier in inverting configuration.

This dual digital Interface supports the following features:

- two DAC converters: one for each output channel
- 8-bit or 12-bit monotonic output
- left or right data alignment in 12-bit mode
- synchronized update capability
- noise-wave generation
- triangular-wave generation
- dual DAC channel independent or simultaneous conversions
- DMA capability for each channel
- external triggers for conversion
- input voltage reference V_{REF+}

Eight DAC trigger inputs are used in the device. The DAC channels are triggered through the timer update outputs that are also connected to different DMA streams.

3.36 Temperature sensor

The temperature sensor has to generate a voltage that varies linearly with temperature. The conversion range is between 1.8 and 3.6 V. The temperature sensor is internally connected to the ADC1_IN16 input channel which is used to convert the sensor output voltage into a digital value.

As the offset of the temperature sensor varies from chip to chip due to process variation, the internal temperature sensor is mainly suitable for applications that detect temperature changes instead of absolute temperatures. If an accurate temperature reading is needed, then an external temperature sensor part should be used.

3.37 Serial wire JTAG debug port (SWJ-DP)

The ARM SWJ-DP interface is embedded, and is a combined JTAG and serial wire debug port that enables either a serial wire debug or a JTAG probe to be connected to the target. The JTAG TMS and TCK pins are shared with SWDIO and SWCLK, respectively, and a specific sequence on the TMS pin is used to switch between JTAG-DP and SW-DP.

3.38 Embedded Trace Macrocell™

The ARM Embedded Trace Macrocell provides a greater visibility of the instruction and data flow inside the CPU core by streaming compressed data at a very high rate from the STM32F20x through a small number of ETM pins to an external hardware trace port analyzer (TPA) device. The TPA is connected to a host computer using USB, Ethernet, or any other high-speed channel. Real-time instruction and data flow activity can be recorded and then formatted for display on the host computer that runs the debugger software. TPA hardware is commercially available from common development tool vendors.

The Embedded Trace Macrocell operates with third party debugger software tools.

4 Pinouts and pin description

Figure 10. STM32F20x LQFP64 pinout

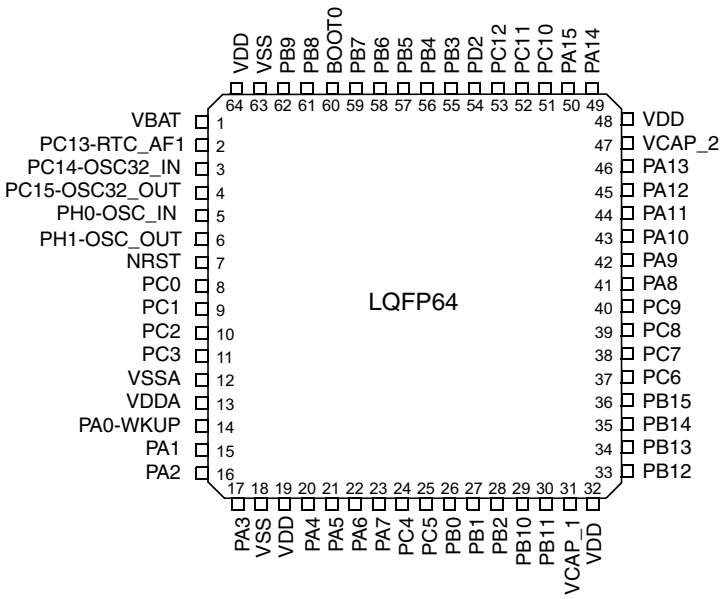

1. The above figure shows the package top view.

Figure 11. STM32F20x WLCSP64+2 ballout

	1	2	3	4	5	6	7	8	9
A	PA14	PA15	PC12	PB3	PB5	PB7	PB9	VDD	V_{BAT}
B	VSS	PA13	PC10	PB4	PB6	BOOT0	PB8	PC13	PC14
C	PA12	VCAP_2	PC11				PD2	IRROFF	PC15
D	PC9	PA11	PA10				PC2	VSS	VDD
E	VDD	PA8	PA9				PA0	NRST	PH0-OSC_IN
F	VSS	PC7	PC8				VREF+	PC1	PH1-OSC_OUT
G	PB15	PC6	PC5				PA3	PC3	PC0
H	PB14	PB13	PB10	PC4	PA6	PA5	REGOFF	PA1	VSS_5
J	PB12	PB11	VCAP_1	PB2	PB1	PB0	PA7	PA4	PA2

ai18470c

1. The above figure shows the package top view.

Figure 12. STM32F20x LQFP100 pinout

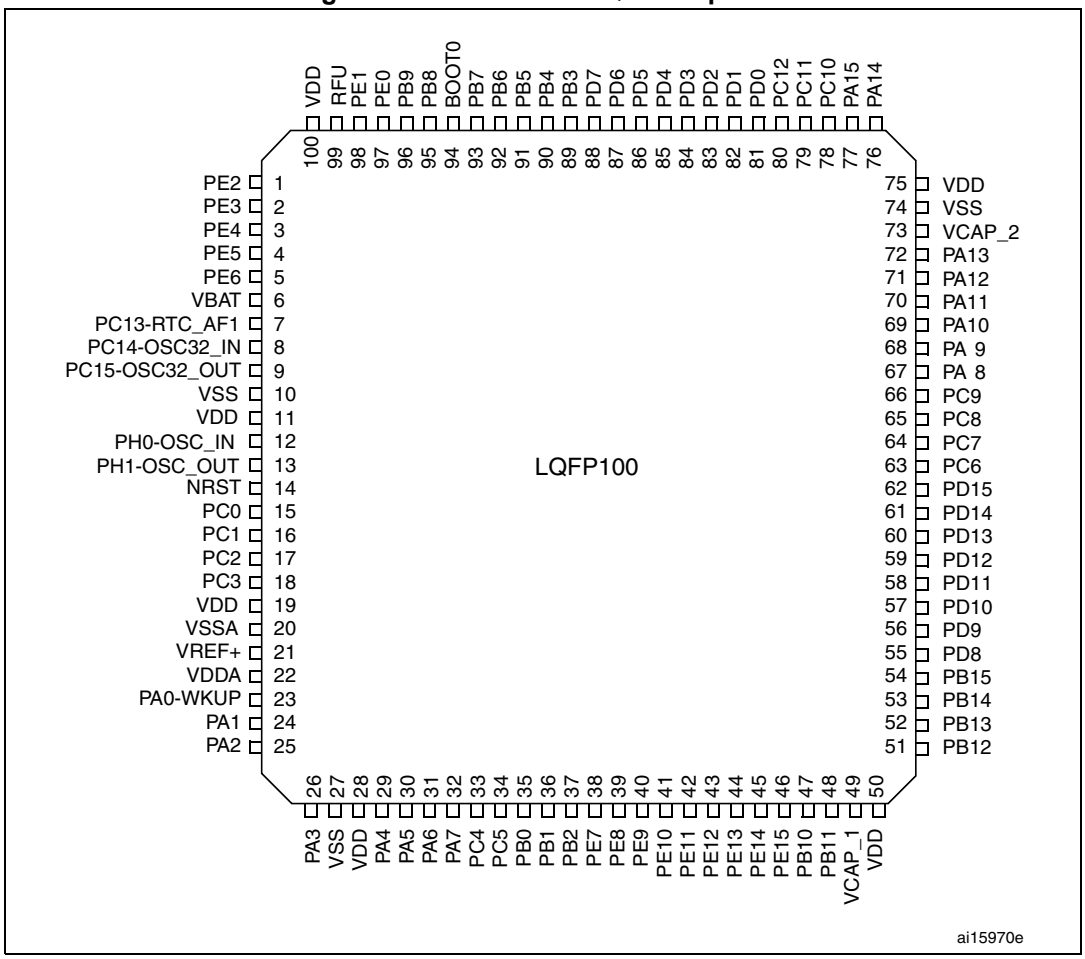

1. RFU means “reserved for future use”. This pin can be tied to V_{DD},V_{SS} or left unconnected.
2. The above figure shows the package top view.

Figure 13. STM32F20x LQFP144 pinout

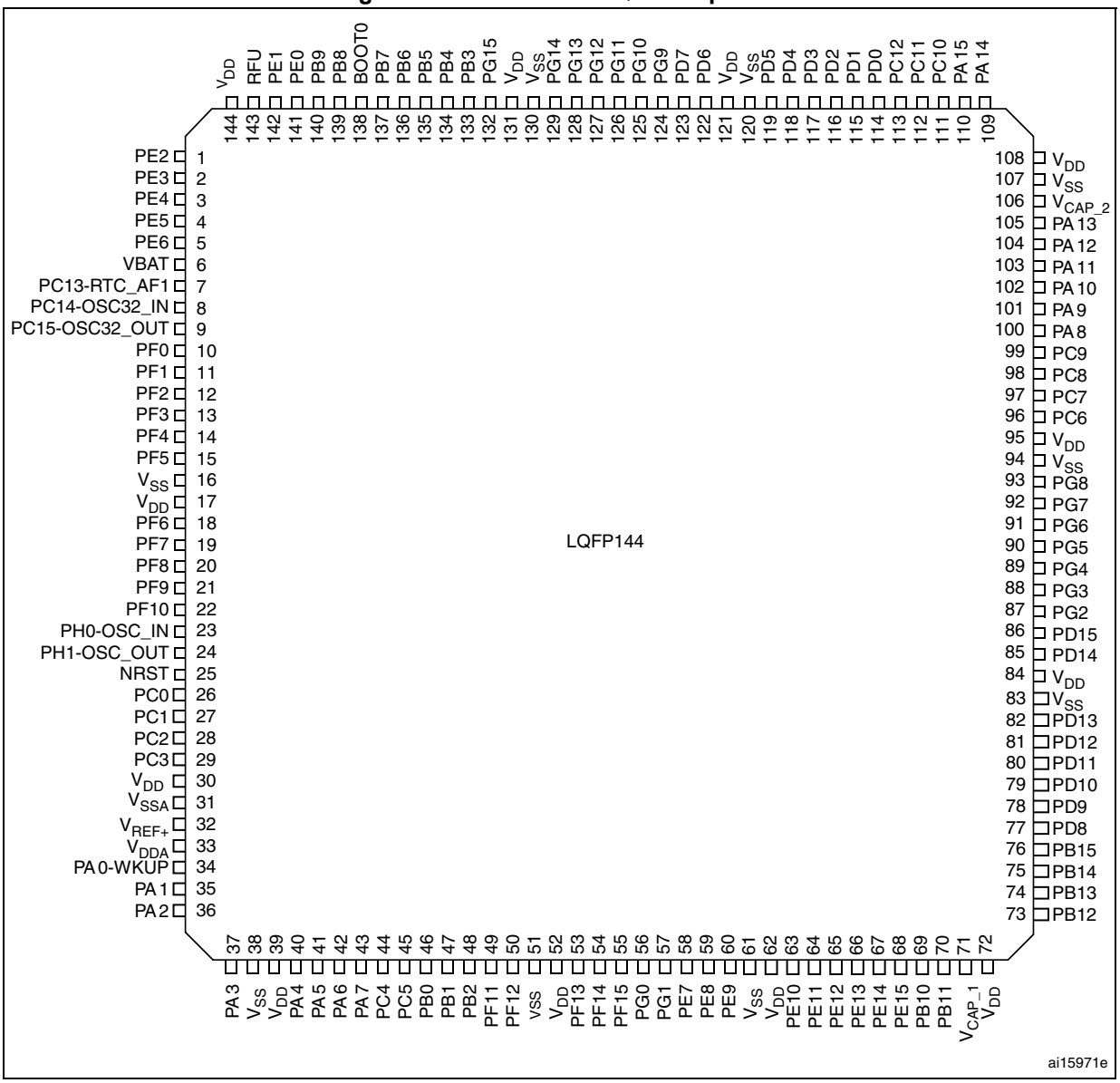

1. RFU means “reserved for future use”. This pin can be tied to V_{DD},V_{SS} or left unconnected.
2. The above figure shows the package top view.

Figure 14. STM32F20x LQFP176 pinout

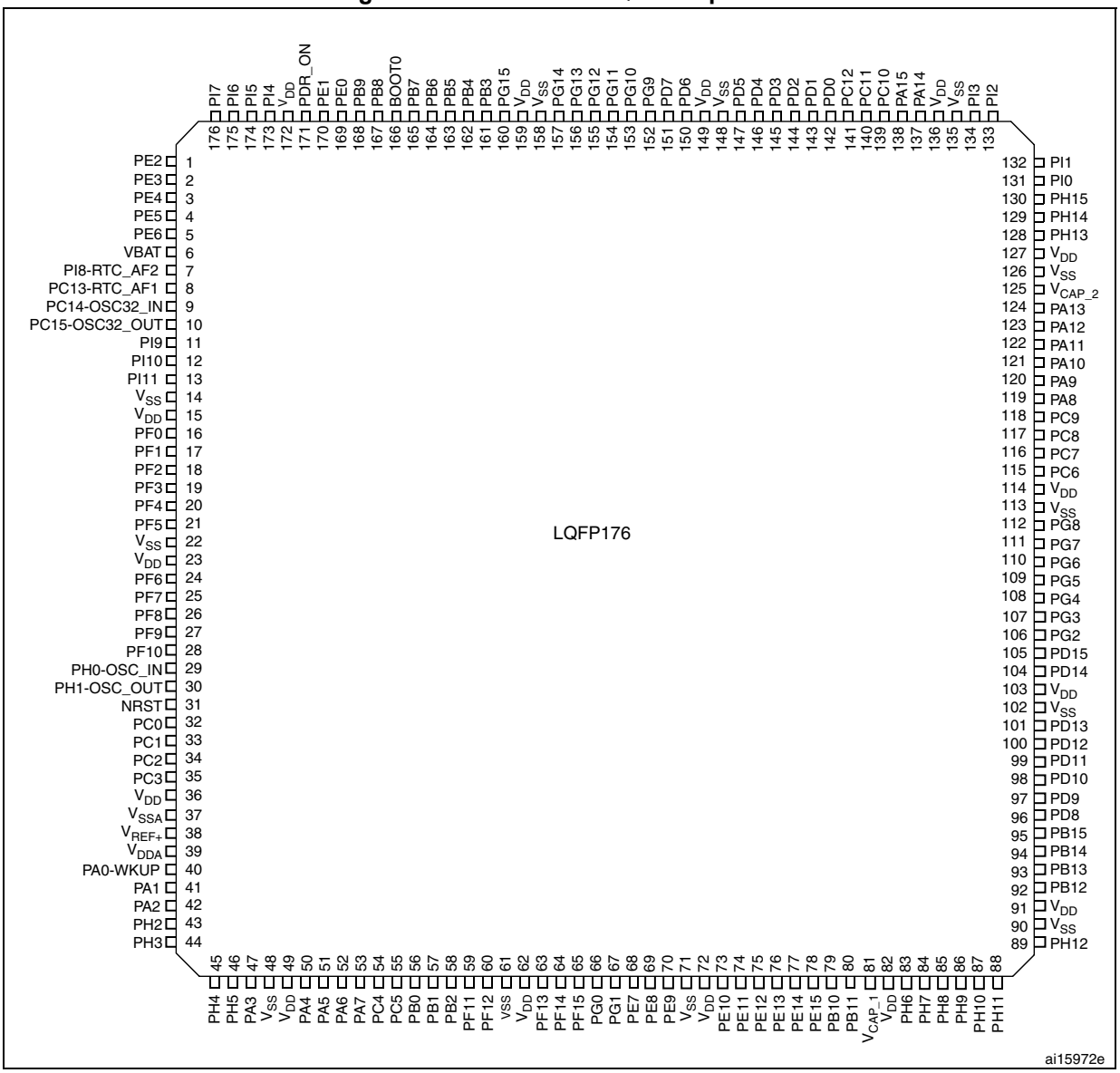

1. RFU means “reserved for future use”. This pin can be tied to V_{DD},V_{SS} or left unconnected.
2. The above figure shows the package top view.

Figure 15. STM32F20x UFBGA176 ballout

	1	2	3	4	5	6	7	8	9	10	11	12	13	14	15
A	PE3	PE2	PE1	PE0	PB8	PB5	PG14	PG13	PB4	PB3	PD7	PC12	PA15	PA14	PA13
B	PE4	PE5	PE6	PB9	PB7	PB6	PG15	PG12	PG11	PG10	PD6	PD0	PC11	PC10	PA12
C	VBAT	PI7	PI6	PI5	VDD	RFU	VDD	VDD	VDD	PG9	PD5	PD1	PI3	PI2	PA11
D	PC13-TAMP1	PI8-TAMP2	PI9	PI4	VSS	BOOT0	VSS	VSS	VSS	PD4	PD3	PD2	PH15	PI1	PA10
E	PC14-OSC32_IN	PF0	PI10	PI11								PH13	PH14	PI0	PA9
F	PC15-OSC32_OUT	VSS	VDD	PH2		VSS	VSS	VSS	VSS	VSS		VSS	VCAP_2	PC9	PA8
G	PH0-OSC_IN	VSS	VDD	PH3		VSS	VSS	VSS	VSS	VSS		VSS	VDD	PC8	PC7
H	PH1-OSC_OUT	PF2	PF1	PH4		VSS	VSS	VSS	VSS	VSS		VSS	VDD	PG8	PC6
J	NRST	PF3	PF4	PH5		VSS	VSS	VSS	VSS	VSS		VDD	VDD	PG7	PG6
K	PF7	PF6	PF5	VDD		VSS	VSS	VSS	VSS	VSS		PH12	PG5	PG4	PG3
L	PF10	PF9	PF8	REGOFF								PH11	PH10	PD15	PG2
M	VSSA	PC0	PC1	PC2	PC3	PB2	PG1	VSS	VSS	VCAP_1	PH6	PH8	PH9	PD14	PD13
N	VREF-	PA1	PA0-WKUP	PA4	PC4	PF13	PG0	VDD	VDD	VDD	PE13	PH7	PD12	PD11	PD10
P	VREF+	PA2	PA6	PA5	PC5	PF12	PF15	PE8	PE9	PE11	PE14	PB12	PB13	PD9	PD8
R	VDDA	PA3	PA7	PB1	PB0	PF11	PF14	PE7	PE10	PE12	PE15	PB10	PB11	PB14	PB15

ai17293c

1. RFU means “reserved for future use”. This pin can be tied to V_{DD},V_{SS} or left unconnected.
2. The above figure shows the package top view.

Table 7. Legend/abbreviations used in the pinout table

Name	Abbreviation	Definition
Pin name	Unless otherwise specified in brackets below the pin name, the pin function during and after reset is the same as the actual pin name	
Pin type	S	Supply pin
	I	Input only pin
	I/O	Input/ output pin
I/O structure	FT	5 V tolerant I/O
	TTa	3.3 V tolerant I/O
	B	Dedicated BOOT0 pin
	RST	Bidirectional reset pin with embedded weak pull-up resistor
Notes	Unless otherwise specified by a note, all I/Os are set as floating inputs during and after reset	
Alternate functions	Functions selected through GPIOx_AFR registers	
Additional functions	Functions directly selected/enabled through peripheral registers	

Table 8. STM32F20x pin and ball definitions

Pins						Pin name (function after reset)[1]	Pin type	I/O structure	Note	Alternate functions	Additional functions
LQFP64	WLCSP64+2	LQFP100	LQFP144	LQFP176	UFBGA176						
-	-	1	1	1	A2	PE2	I/O	FT	-	TRACECLK, FSMC_A23, ETH_MII_TXD3, EVENTOUT	-
-	-	2	2	2	A1	PE3	I/O	FT	-	TRACED0,FSMC_A19, EVENTOUT	-
-	-	3	3	3	B1	PE4	I/O	FT	-	TRACED1,FSMC_A20, DCMI_D4, EVENTOUT	-
-	-	4	4	4	B2	PE5	I/O	FT	-	TRACED2, FSMC_A21, TIM9_CH1, DCMI_D6, EVENTOUT	-
-	-	5	5	5	B3	PE6	I/O	FT	-	TRACED3, FSMC_A22, TIM9_CH2, DCMI_D7, EVENTOUT	-
1	A9	6	6	6	C1	V_{BAT}	S		-	-	-
-	-	-	-	7	D2	PI8	I/O	FT	(2)(3)	EVENTOUT	RTC_AF2
2	B8	7	7	8	D1	PC13	I/O	FT	(2)(3)	EVENTOUT	RTC_AF1
3	B9	8	8	9	E1	PC14/OSC32_IN (PC14)	I/O	FT	(2)(3)	EVENTOUT	OSC32_IN[4]
4	C9	9	9	10	F1	PC15-OSC32_OUT (PC15)	I/O	FT	(2)(3)	EVENTOUT	OSC32_OUT[4]
-	-	-	-	11	D3	PI9	I/O	FT	-	CAN1_RX,EVENTOUT	-
-	-	-	-	12	E3	PI10	I/O	FT	-	ETH_MII_RX_ER, EVENTOUT	-
-	-	-	-	13	E4	PI11	I/O	FT	-	OTG_HS_ULPI_DIR, EVENTOUT	-
-	-	-	-	14	F2	V_{SS}	S		-	-	-
-	-	-	-	15	F3	V_{DD}	S		-	-	-
-	-	-	10	16	E2	PF0	I/O	FT	-	FSMC_A0, I2C2_SDA, EVENTOUT	-
-	-	-	11	17	H3	PF1	I/O	FT	-	FSMC_A1, I2C2_SCL, EVENTOUT	-
-	-	-	12	18	H2	PF2	I/O	FT	-	FSMC_A2, I2C2_SMBA, EVENTOUT	-
-	-	-	13	19	J2	PF3	I/O	FT	(4)	FSMC_A3, EVENTOUT	ADC3_IN9

Table 8. STM32F20x pin and ball definitions (continued)

Pins						Pin name (function after reset)(1)	Pin type	I/O structure	Note	Alternate functions	Additional functions
LQFP64	WLCSP64+2	LQFP100	LQFP144	LQFP176	UFBGA176						
-	-	-	14	20	J3	PF4	I/O	FT	(4)	FSMC_A4, EVENTOUT	ADC3_IN14
-	-	-	15	21	K3	PF5	I/O	FT	(4)	FSMC_A5, EVENTOUT	ADC3_IN15
-	H9	10	16	22	G2	V_{SS}	S	-	-	-	-
-	-	11	17	23	G3	V_{DD}	S	-	-	-	-
-	-	-	18	24	K2	PF6	I/O	FT	(4)	TIM10_CH1, FSMC_NIORD, EVENTOUT	ADC3_IN4
-	-	-	19	25	K1	PF7	I/O	FT	(4)	TIM11_CH1,FSMC_NREG, EVENTOUT	ADC3_IN5
-	-	-	20	26	L3	PF8	I/O	FT	(4)	TIM13_CH1, FSMC_NIOWR, EVENTOUT	ADC3_IN6
-	-	-	21	27	L2	PF9	I/O	FT	(4)	TIM14_CH1, FSMC_CD, EVENTOUT	ADC3_IN7
-	-	-	22	28	L1	PF10	I/O	FT	(4)	FSMC_INTR, EVENTOUT	ADC3_IN8
5	E9	12	23	29	G1	PH0/OSC_IN (PH0)	I/O	FT	-	EVENTOUT	OSC_IN(4)
6	F9	13	24	30	H1	PH1/OSC_OUT (PH1)	I/O	FT	-	EVENTOUT	OSC_OUT(4)
7	E8	14	25	31	J1	NRST	I/O		-	-	-
8	G9	15	26	32	M2	PC0	I/O	FT	(4)	OTG_HS_ULPI_STP, EVENTOUT	ADC123_ IN10
9	F8	16	27	33	M3	PC1	I/O	FT	(4)	ETH_MDC, EVENTOUT	ADC123_ IN11
10	D7	17	28	34	M4	PC2	I/O	FT	(4)	SPI2_MISO, OTG_HS_ULPI_DIR, ETH_MII_TXD2, EVENTOUT	ADC123_ IN12
11	G8	18	29	35	M5	PC3	I/O	FT	(4)	SPI2_MOSI, I2S2_SD, OTG_HS_ULPI_NXT, ETH_MII_TX_CLK, EVENTOUT	ADC123_ IN13
-	-	19	30	36	-	V_{DD}	S	-	-	-	-
12	-	20	31	37	M1	V_{SSA}	S	-	-	-	-
-	-	-	-	-	N1	V_{REF-}	S	-	-	-	-
-	F7	21	32	38	P1	V_{REF+}	S	-	-	-	-

Table 8. STM32F20x pin and ball definitions (continued)

Pins						Pin name (function after reset)(1)	Pin type	I/O structure	Note	Alternate functions	Additional functions
LQFP64	WLCSP64+2	LQFP100	LQFP144	LQFP176	UFBGA176						
13	-	22	33	39	R1	V_{DDA}	S	-	-	-	-
14	E7	23	34	40	N3	PA0-WKUP (PA0)	I/O	FT	(4)(5)	USART2_CTS, UART4_TX, ETH_MII_CRS, TIM2_CH1_ETR, TIM5_CH1, TIM8_ETR, EVENTOUT	ADC123_IN0, WKUP
15	H8	24	35	41	N2	PA1	I/O	FT	(4)	USART2_RTS, UART4_RX, ETH_RMII_REF_CLK, ETH_MII_RX_CLK, TIM5_CH2, TIM2_CH2, EVENTOUT	ADC123_IN1
16	J9	25	36	42	P2	PA2	I/O	FT	(4)	USART2_TX,TIM5_CH3, TIM9_CH1, TIM2_CH3, ETH_MDIO, EVENTOUT	ADC123_IN2
-	-	-	-	43	F4	PH2	I/O	FT	-	ETH_MII_CRS, EVENTOUT	-
-	-	-	-	44	G4	PH3	I/O	FT	-	ETH_MII_COL, EVENTOUT	-
-	-	-	-	45	H4	PH4	I/O	FT	-	I2C2_SCL, OTG_HS_ULPI_NXT, EVENTOUT	-
-	-	-	-	46	J4	PH5	I/O	FT	-	I2C2_SDA, EVENTOUT	-
17	G7	26	37	47	R2	PA3	I/O	FT	(4)	USART2_RX, TIM5_CH4, TIM9_CH2, TIM2_CH4, OTG_HS_ULPI_D0, ETH_MII_COL, EVENTOUT	ADC123_IN3
18	F1	27	38	48	-	V_{SS}	S	-	-	-	-
	H7				L4	REGOFF	I/O	-	-	-	-
19	E1	28	39	49	K4	V_{DD}	S	-	-	-	-
20	J8	29	40	50	N4	PA4	I/O	TTa	(4)	SPI1_NSS, SPI3_NSS, USART2_CK, DCMI_HSYNC, OTG_HS_SOF, I2S3_WS, EVENTOUT	ADC12_IN4, DAC_OUT1
21	H6	30	41	51	P4	PA5	I/O	TTa	(4)	SPI1_SCK, OTG_HS_ULPI_CK, TIM2_CH1_ETR, TIM8_CH1N, EVENTOUT	ADC12_IN5, DAC_OUT2

Table 8. STM32F20x pin and ball definitions (continued)

Pins						Pin name (function after reset)(1)	Pin type	I/O structure	Note	Alternate functions	Additional functions
LQFP64	WLCSP64+2	LQFP100	LQFP144	LQFP176	UFBGA176						
22	H5	31	42	52	P3	PA6	I/O	FT	(4)	SPI1_MISO, TIM8_BKIN, TIM13_CH1, DCMI_PIXCLK, TIM3_CH1, TIM1_BKIN, EVENTOUT	ADC12_IN6
23	J7	32	43	53	R3	PA7	I/O	FT	(4)	SPI1_MOSI, TIM8_CH1N, TIM14_CH1, TIM3_CH2, ETH_MII_RX_DV, TIM1_CH1N, ETH_RMII_CRS_DV, EVENTOUT	ADC12_IN7
24	H4	33	44	54	N5	PC4	I/O	FT	(4)	ETH_RMII_RXD0, ETH_MII_RXD0, EVENTOUT	ADC12_IN14
25	G3	34	45	55	P5	PC5	I/O	FT	(4)	ETH_RMII_RXD1, ETH_MII_RXD1, EVENTOUT	ADC12_IN15
26	J6	35	46	56	R5	PB0	I/O	FT	(4)	TIM3_CH3, TIM8_CH2N, OTG_HS_ULPI_D1, ETH_MII_RXD2, TIM1_CH2N, EVENTOUT	ADC12_IN8
27	J5	36	47	57	R4	PB1	I/O	FT	(4)	TIM3_CH4, TIM8_CH3N, OTG_HS_ULPI_D2, ETH_MII_RXD3, TIM1_CH3N, EVENTOUT	ADC12_IN9
28	J4	37	48	58	M6	PB2/BOOT1 (PB2)	I/O	FT	-	EVENTOUT	-
-	-	-	49	59	R6	PF11	I/O	FT	-	DCMI_D12, EVENTOUT	-
-	-	-	50	60	P6	PF12	I/O	FT	-	FSMC_A6, EVENTOUT	-
-	-	-	51	61	M8	V_{SS}	S		-	-	-
-	-	-	52	62	N8	V_{DD}	S		-	-	-
-	-	-	53	63	N6	PF13	I/O	FT	-	FSMC_A7, EVENTOUT	-
-	-	-	54	64	R7	PF14	I/O	FT	-	FSMC_A8, EVENTOUT	-
-	-	-	55	65	P7	PF15	I/O	FT	-	FSMC_A9, EVENTOUT	-
-	-	-	56	66	N7	PG0	I/O	FT	-	FSMC_A10, EVENTOUT	-
-	-	-	57	67	M7	PG1	I/O	FT	-	FSMC_A11, EVENTOUT	-

Table 8. STM32F20x pin and ball definitions (continued)

Pins						Pin name (function after reset)(1)	Pin type	I/O structure	Note	Alternate functions	Additional functions
LQFP64	WLCSP64+2	LQFP100	LQFP144	LQFP176	UFBGA176						
-	-	38	58	68	R8	PE7	I/O	FT	-	FSMC_D4,TIM1_ETR, EVENTOUT	-
-	-	39	59	69	P8	PE8	I/O	FT	-	FSMC_D5,TIM1_CH1N, EVENTOUT	-
-	-	40	60	70	P9	PE9	I/O	FT	-	FSMC_D6,TIM1_CH1, EVENTOUT	-
-	-	-	61	71	M9	V_{SS}	S		-	-	-
-	-	-	62	72	N9	V_{DD}	S		-	-	-
-	-	41	63	73	R9	PE10	I/O	FT	-	FSMC_D7,TIM1_CH2N, EVENTOUT	-
-	-	42	64	74	P10	PE11	I/O	FT	-	FSMC_D8,TIM1_CH2, EVENTOUT	-
-	-	43	65	75	R10	PE12	I/O	FT	-	FSMC_D9,TIM1_CH3N, EVENTOUT	-
-	-	44	66	76	N11	PE13	I/O	FT	-	FSMC_D10,TIM1_CH3, EVENTOUT	-
-	-	45	67	77	P11	PE14	I/O	FT	-	FSMC_D11,TIM1_CH4, EVENTOUT	-
-	-	46	68	78	R11	PE15	I/O	FT	-	FSMC_D12,TIM1_BKIN, EVENTOUT	-
29	H3	47	69	79	R12	PB10	I/O	FT	-	SPI2_SCK, I2S2_SCK, I2C2_SCL,USART3_TX,OTG_HS_ULPI_D3,ETH_MII_RX_ER,TIM2_CH3, EVENTOUT	-
30	J2	48	70	80	R13	PB11	I/O	FT	-	I2C2_SDA, USART3_RX, OTG_HS_ULPI_D4, ETH_RMII_TX_EN, ETH_MII_TX_EN, TIM2_CH4, EVENTOUT	-
31	J3	49	71	81	M10	V_{CAP_1}	S		-	-	-
32	-	50	72	82	N10	V_{DD}	S		-	-	-
-	-	-	-	83	M11	PH6	I/O	FT	-	I2C2_SMBA, TIM12_CH1, ETH_MII_RXD2, EVENTOUT	-

Table 8. STM32F20x pin and ball definitions (continued)

Pins						Pin name (function after reset)(1)	Pin type	I/O structure	Note	Alternate functions	Additional functions
LQFP64	WLCSP64+2	LQFP100	LQFP144	LQFP176	UFBGA176						
-	-	-	-	84	N12	PH7	I/O	FT	-	I2C3_SCL, ETH_MII_RXD3, EVENTOUT	-
-	-	-	-	85	M12	PH8	I/O	FT	-	I2C3_SDA, DCMI_HSYNC, EVENTOUT	-
-	-	-	-	86	M13	PH9	I/O	FT	-	I2C3_SMBA, TIM12_CH2, DCMI_D0, EVENTOUT	-
-	-	-	-	87	L13	PH10	I/O	FT	-	TIM5_CH1, DCMI_D1, EVENTOUT	-
-	-	-	-	88	L12	PH11	I/O	FT	-	TIM5_CH2, DCMI_D2, EVENTOUT	-
-	-	-	-	89	K12	PH12	I/O	FT	-	TIM5_CH3, DCMI_D3, EVENTOUT	-
-	-	-	-	90	H12	V_{SS}	S	-	-	-	-
-	-	-	-	91	J12	V_{DD}	S	-	-	-	-
33	J1	51	73	92	P12	PB12	I/O	FT	-	SPI2_NSS, I2S2_WS, I2C2_SMBA, USART3_CK, TIM1_BKIN, CAN2_RX, OTG_HS_ULPI_D5, ETH_RMII_TXD0, ETH_MII_TXD0, OTG_HS_ID, EVENTOUT	-
34	H2	52	74	93	P13	PB13	I/O	FT	-	SPI2_SCK, I2S2_SCK, USART3_CTS, TIM1_CH1N, CAN2_TX, OTG_HS_ULPI_D6, ETH_RMII_TXD1, ETH_MII_TXD1, EVENTOUT	OTG_HS_ VBUS
35	H1	53	75	94	R14	PB14	I/O	FT	-	SPI2_MISO, TIM1_CH2N, TIM12_CH1, OTG_HS_DM USART3_RTS, TIM8_CH2N, EVENTOUT	-
36	G1	54	76	95	R15	PB15	I/O	FT	-	SPI2_MOSI, I2S2_SD, TIM1_CH3N, TIM8_CH3N, TIM12_CH2, OTG_HS_DP, RTC_50Hz, EVENTOUT	-
-	-	55	77	96	P15	PD8	I/O	FT	-	FSMC_D13, USART3_TX, EVENTOUT	-

Table 8. STM32F20x pin and ball definitions (continued)

Pins						Pin name (function after reset)(1)	Pin type	I/O structure	Note	Alternate functions	Additional functions
LQFP64	WLCSP64+2	LQFP100	LQFP144	LQFP176	UFBGA176						
-	-	56	78	97	P14	PD9	I/O	FT	-	FSMC_D14, USART3_RX, EVENTOUT	-
-	-	57	79	98	N15	PD10	I/O	FT	-	FSMC_D15, USART3_CK, EVENTOUT	-
-	-	58	80	99	N14	PD11	I/O	FT	-	FSMC_A16,USART3_CTS, EVENTOUT	-
-	-	59	81	100	N13	PD12	I/O	FT	-	FSMC_A17,TIM4_CH1, USART3_RTS, EVENTOUT	-
-	-	60	82	101	M15	PD13	I/O	FT	-	FSMC_A18,TIM4_CH2, EVENTOUT	-
-	-	-	83	102	-	V_{SS}	S	-	-	-	-
-	-	-	84	103	J13	V_{DD}	S	-	-	-	-
-	-	61	85	104	M14	PD14	I/O	FT	-	FSMC_D0,TIM4_CH3, EVENTOUT	-
-	-	62	86	105	L14	PD15	I/O	FT	-	FSMC_D1,TIM4_CH4, EVENTOUT	-
-	-	-	87	106	L15	PG2	I/O	FT	-	FSMC_A12, EVENTOUT	-
-	-	-	88	107	K15	PG3	I/O	FT	-	FSMC_A13, EVENTOUT	-
-	-	-	89	108	K14	PG4	I/O	FT	-	FSMC_A14, EVENTOUT	-
-	-	-	90	109	K13	PG5	I/O	FT	-	FSMC_A15, EVENTOUT	-
-	-	-	91	110	J15	PG6	I/O	FT	-	FSMC_INT2, EVENTOUT	-
-	-	-	92	111	J14	PG7	I/O	FT	-	FSMC_INT3 ,USART6_CK, EVENTOUT	-
-	-	-	93	112	H14	PG8	I/O	FT	-	USART6_RTS, ETH_PPS_OUT, EVENTOUT	-
-	-	-	94	113	G12	V_{SS}	S	-	-	-	-
-	-	-	95	114	H13	V_{DD}	S	-	-	-	-
37	G2	63	96	115	H15	PC6	I/O	FT	-	I2S2_MCK, TIM8_CH1, SDIO_D6, USART6_TX, DCMI_D0, TIM3_CH1, EVENTOUT	-

Table 8. STM32F20x pin and ball definitions (continued)

Pins						Pin name (function after reset)(1)	Pin type	I/O structure	Note	Alternate functions	Additional functions
LQFP64	WLCSP64+2	LQFP100	LQFP144	LQFP176	UFBGA176						
38	F2	64	97	116	G15	PC7	I/O	FT	-	I2S3_MCK, TIM8_CH2, SDIO_D7, USART6_RX, DCMI_D1, TIM3_CH2, EVENTOUT	-
39	F3	65	98	117	G14	PC8	I/O	FT	-	TIM8_CH3,SDIO_D0, TIM3_CH3, USART6_CK, DCMI_D2, EVENTOUT	-
40	D1	66	99	118	F14	PC9	I/O	FT	-	I2S2_CKIN, I2S3_CKIN, MCO2, TIM8_CH4, SDIO_D1, I2C3_SDA, DCMI_D3, TIM3_CH4, EVENTOUT	-
41	E2	67	100	119	F15	PA8	I/O	FT	-	MCO1, USART1_CK, TIM1_CH1, I2C3_SCL, OTG_FS_SOF, EVENTOUT	-
42	E3	68	101	120	E15	PA9	I/O	FT	-	USART1_TX, TIM1_CH2, I2C3_SMBA, DCMI_D0, EVENTOUT	OTG_FS_ VBUS
43	D3	69	102	121	D15	PA10	I/O	FT	-	USART1_RX, TIM1_CH3, OTG_FS_ID,DCMI_D1, EVENTOUT	-
44	D2	70	103	122	C15	PA11	I/O	FT	-	USART1_CTS, CAN1_RX, TIM1_CH4,OTG_FS_DM, EVENTOUT	-
45	C1	71	104	123	B15	PA12	I/O	FT	-	USART1_RTS, CAN1_TX, TIM1_ETR, OTG_FS_DP, EVENTOUT	-
46	B2	72	105	124	A15	PA13 (JTMS-SWDIO)	I/O	FT	-	JTMS-SWDIO, EVENTOUT	-
47	C2	73	106	125	F13	V_{CAP_2}	S	-	-	-	-
-	B1	74	107	126	F12	V_{SS}	S	-	-	-	-
48	A8	75	108	127	G13	V_{DD}	S	-	-	-	-
-	-	-	-	128	E12	PH13	I/O	FT	-	TIM8_CH1N, CAN1_TX, EVENTOUT	-
-	-	-	-	129	E13	PH14	I/O	FT	-	TIM8_CH2N, DCMI_D4, EVENTOUT	-

Table 8. STM32F20x pin and ball definitions (continued)

Pins						Pin name (function after reset)(1)	Pin type	I/O structure	Note	Alternate functions	Additional functions
LQFP64	WLCSP64+2	LQFP100	LQFP144	LQFP176	UFBGA176						
-	-	-	-	130	D13	PH15	I/O	FT	-	TIM8_CH3N, DCMI_D11, EVENTOUT	-
-	-	-	-	131	E14	PI0	I/O	FT	-	TIM5_CH4, SPI2_NSS, I2S2_WS, DCMI_D13, EVENTOUT	-
-	-	-	-	132	D14	PI1	I/O	FT	-	SPI2_SCK, I2S2_SCK, DCMI_D8, EVENTOUT	-
-	-	-	-	133	C14	PI2	I/O	FT	-	TIM8_CH4 ,SPI2_MISO, DCMI_D9, EVENTOUT	-
-	-	-	-	134	C13	PI3	I/O	FT	-	TIM8_ETR, SPI2_MOSI, I2S2_SD, DCMI_D10, EVENTOUT	-
-	-	-	-	135	D9	V_{SS}	S	-	-	-	-
-	-	-	-	136	C9	V_{DD}	S	-	-	-	-
49	A1	76	109	137	A14	PA14 (JTCK-SWCLK)	I/O	FT	-	JTCK-SWCLK, EVENTOUT	-
50	A2	77	110	138	A13	PA15 (JTDI)	I/O	FT	-	JTDI, SPI3_NSS, I2S3_WS,TIM2_CH1_ETR, SPI1_NSS, EVENTOUT	-
51	B3	78	111	139	B14	PC10	I/O	FT	-	SPI3_SCK, I2S3_SCK, UART4_TX, SDIO_D2, DCMI_D8, USART3_TX, EVENTOUT	-
52	C3	79	112	140	B13	PC11	I/O	FT	-	UART4_RX, SPI3_MISO, SDIO_D3, DCMI_D4,USART3_RX, EVENTOUT	-
53	A3	80	113	141	A12	PC12	I/O	FT	-	UART5_TX, SDIO_CK, DCMI_D9, SPI3_MOSI, I2S3_SD, USART3_CK, EVENTOUT	-
-	-	81	114	142	B12	PD0	I/O	FT	-	FSMC_D2,CAN1_RX, EVENTOUT	-
-	-	82	115	143	C12	PD1	I/O	FT	-	FSMC_D3, CAN1_TX, EVENTOUT	-

Table 8. STM32F20x pin and ball definitions (continued)

Pins						Pin name (function after reset)(1)	Pin type	I/O structure	Note	Alternate functions	Additional functions
LQFP64	WLCSP64+2	LQFP100	LQFP144	LQFP176	UFBGA176						
54	C7	83	116	144	D12	PD2	I/O	FT	-	TIM3_ETR,UART5_RX, SDIO_CMD, DCMI_D11, EVENTOUT	-
-	-	84	117	145	D11	PD3	I/O	FT	-	FSMC_CLK,USART2_CTS, EVENTOUT	-
-	-	85	118	146	D10	PD4	I/O	FT	-	FSMC_NOE, USART2_RTS, EVENTOUT	-
-	-	86	119	147	C11	PD5	I/O	FT	-	FSMC_NWE,USART2_TX, EVENTOUT	-
-	-	-	120	148	D8	V_{SS}	S	-	-	-	-
-	-	-	121	149	C8	V_{DD}	S	-	-	-	-
-	-	87	122	150	B11	PD6	I/O	FT	-	FSMC_NWAIT, USART2_RX, EVENTOUT	-
-	-	88	123	151	A11	PD7	I/O	FT	-	USART2_CK,FSMC_NE1, FSMC_NCE2, EVENTOUT	-
-	-	-	124	152	C10	PG9	I/O	FT	-	USART6_RX, FSMC_NE2,FSMC_NCE3, EVENTOUT	-
-	-	-	125	153	B10	PG10	I/O	FT	-	FSMC_NCE4_1, FSMC_NE3, EVENTOUT	-
-	-	-	126	154	B9	PG11	I/O	FT	-	FSMC_NCE4_2, ETH_MII_TX_EN , ETH _RMII_TX_EN, EVENTOUT	-
-	-	-	127	155	B8	PG12	I/O	FT	-	FSMC_NE4, USART6_RTS, EVENTOUT	-
-	-	-	128	156	A8	PG13	I/O	FT	-	FSMC_A24, USART6_CTS, ETH_MII_TXD0, ETH_RMII_TXD0, EVENTOUT	-
-	-	-	129	157	A7	PG14	I/O	FT	-	FSMC_A25, USART6_TX, ETH_MII_TXD1, ETH_RMII_TXD1, EVENTOUT	-
-	-	-	130	158	D7	V_{SS}	S	-	-	-	-

Table 8. STM32F20x pin and ball definitions (continued)

Pins						Pin name (function after reset)(1)	Pin type	I/O structure	Note	Alternate functions	Additional functions
LQFP64	WLCSP64+2	LQFP100	LQFP144	LQFP176	UFBGA176						
-	-	-	131	159	C7	V_{DD}	S	-	-	-	-
-	-	-	132	160	B7	PG15	I/O	FT	-	USART6_CTS, DCMI_D13, EVENTOUT	-
55	A4	89	133	161	A10	PB3 (JTDO/TRACESWO)	I/O	FT	-	JTDO/ TRACESWO, SPI3_SCK, I2S3_SCK, TIM2_CH2, SPI1_SCK, EVENTOUT	-
56	B4	90	134	162	A9	PB4	I/O	FT	-	NJTRST, SPI3_MISO, TIM3_CH1, SPI1_MISO, EVENTOUT	-
57	A5	91	135	163	A6	PB5	I/O	FT	-	I2C1_SMBA, CAN2_RX, OTG_HS_ULPI_D7, ETH_PPS_OUT, TIM3_CH2, SPI1_MOSI, SPI3_MOSI, DCMI_D10, I2S3_SD, EVENTOUT	-
58	B5	92	136	164	B6	PB6	I/O	FT	-	I2C1_SCL,, TIM4_CH1, CAN2_TX, DCMI_D5,USART1_TX, EVENTOUT	-
59	A6	93	137	165	B5	PB7	I/O	FT	-	I2C1_SDA, FSMC_NL(6), DCMI_VSYNC, USART1_RX, TIM4_CH2, EVENTOUT	-
60	B6	94	138	166	D6	BOOT0	I	B	-	-	V_{PP}
61	B7	95	139	167	A5	PB8	I/O	FT	-	TIM4_CH3,SDIO_D4, TIM10_CH1, DCMI_D6, ETH_MII_TXD3, I2C1_SCL, CAN1_RX, EVENTOUT	-
62	A7	96	140	168	B4	PB9	I/O	FT	-	SPI2_NSS, I2S2_WS, TIM4_CH4, TIM11_CH1, SDIO_D5, DCMI_D7, I2C1_SDA, CAN1_TX, EVENTOUT	-
-	-	97	141	169	A4	PE0	I/O	FT	-	TIM4_ETR, FSMC_NBL0, DCMI_D2, EVENTOUT	-

Table 8. STM32F20x pin and ball definitions (continued)

Pins						Pin name (function after reset)(1)	Pin type	I/O structure	Note	Alternate functions	Additional functions
LQFP64	WLCSP64+2	LQFP100	LQFP144	LQFP176	UFBGA176						
-	-	98	142	170	A3	PE1	I/O	FT	-	FSMC_NBL1, DCMI_D3, EVENTOUT	-
-	-	-	-	-	D5	V_{SS}	S	-	-	-	-
63	D8	-	-	-	-	V_{SS}	S	-	-	-	-
-	-	99	143	171	C6	RFU	-	-	(7)	-	-
64	D9	100	144	172	C5	V_{DD}	S	-	-	-	-
-	-	-	-	173	D4	PI4	I/O	FT	-	TIM8_BKIN, DCMI_D5, EVENTOUT	-
-	-	-	-	174	C4	PI5	I/O	FT	-	TIM8_CH1, DCMI_VSYNC, EVENTOUT	-
-	-	-	-	175	C3	PI6	I/O	FT	-	TIM8_CH2, DCMI_D6, EVENTOUT	-
-	-	-	-	176	C2	PI7	I/O	FT	-	TIM8_CH3, DCMI_D7, EVENTOUT	-
-	C8	-	-	-	-	IRROFF	I/O	-	-	-	-

1. Function availability depends on the chosen device.
2. PC13, PC14, PC15 and PI8 are supplied through the power switch. Since the switch only sinks a limited amount of current (3 mA), the use of GPIOs PC13 to PC15 and PI8 in output mode is limited: the speed should not exceed 2 MHz with a maximum load of 30 pF and these I/Os must not be used as a current source (e.g. to drive an LED).
3. Main function after the first backup domain power-up. Later on, it depends on the contents of the RTC registers even after reset (because these registers are not reset by the main reset). For details on how to manage these I/Os, refer to the RTC register description sections in the STM32F20x and STM32F21x reference manual, available from the STMicroelectronics website: www.st.com.
4. FT = 5 V tolerant except when in analog mode or oscillator mode (for PC14, PC15, PH0 and PH1).
5. If the device is delivered in an UFBGA176 package and if the REGOFF pin is set to V_{DD} (Regulator OFF), then PA0 is used as an internal Reset (active low).
6. FSMC_NL pin is also named FSMC_NADV on memory devices.
7. RFU means “reserved for future use”. This pin can be tied to V_{DD},V_{SS} or left unconnected.

Table 9. FSMC pin definition

Pins	FSMC				LQFP100
	CF	NOR/PSRAM/SRAM	NOR/PSRAM Mux	NAND 16 bit	
PE2	-	A23	A23	-	Yes
PE3	-	A19	A19	-	Yes
PE4	-	A20	A20	-	Yes

Table 9. FSMC pin definition (continued)

Pins	FSMC				LQFP100
	CF	NOR/PSRAM/SRAM	NOR/PSRAM Mux	NAND 16 bit	
PE5	-	A21	A21	-	Yes
PE6	-	A22	A22	-	Yes
PF0	A0	A0	-	-	-
PF1	A1	A1	-	-	-
PF2	A2	A2	-	-	-
PF3	A3	A3	-	-	-
PF4	A4	A4	-	-	-
PF5	A5	A5	-	-	-
PF6	NIORD	-	-	-	-
PF7	NREG	-	-	-	-
PF8	NIOWR	-	-	-	-
PF9	CD	-	-	-	-
PF10	INTR	-	-	-	-
PF12	A6	A6	-	-	-
PF13	A7	A7	-	-	-
PF14	A8	A8	-	-	-
PF15	A9	A9	-	-	-
PG0	A10	A10	-	-	-
PG1	-	A11	-	-	-
PE7	D4	D4	DA4	D4	Yes
PE8	D5	D5	DA5	D5	Yes
PE9	D6	D6	DA6	D6	Yes
PE10	D7	D7	DA7	D7	Yes
PE11	D8	D8	DA8	D8	Yes
PE12	D9	D9	DA9	D9	Yes
PE13	D10	D10	DA10	D10	Yes
PE14	D11	D11	DA11	D11	Yes
PE15	D12	D12	DA12	D12	Yes
PD8	D13	D13	DA13	D13	Yes
PD9	D14	D14	DA14	D14	Yes
PD10	D15	D15	DA15	D15	Yes
PD11	-	A16	A16	CLE	Yes
PD12	-	A17	A17	ALE	Yes

Table 9. FSMC pin definition (continued)

Pins	FSMC				LQFP100
	CF	NOR/PSRAM/SRAM	NOR/PSRAM Mux	NAND 16 bit	
PD13	-	A18	A18	-	Yes
PD14	D0	D0	DA0	D0	Yes
PD15	D1	D1	DA1	D1	Yes
PG2	-	A12	-	-	-
PG3	-	A13	-	-	-
PG4	-	A14	-	-	-
PG5	-	A15	-	-	-
PG6	-	-	-	INT2	-
PG7	-	-	-	INT3	-
PD0	D2	D2	DA2	D2	Yes
PD1	D3	D3	DA3	D3	Yes
PD3	-	CLK	CLK	-	Yes
PD4	NOE	NOE	NOE	NOE	Yes
PD5	NWE	NWE	NWE	NWE	Yes
PD6	NWAIT	NWAIT	NWAIT	NWAIT	Yes
PD7	-	NE1	NE1	NCE2	Yes
PG9	-	NE2	NE2	NCE3	-
PG10	NCE4_1	NE3	NE3	-	-
PG11	NCE4_2	-	-	-	-
PG12	-	NE4	NE4	-	-
PG13	-	A24	A24	-	-
PG14	-	A25	A25	-	-
PB7	-	NADV	NADV	-	Yes
PE0	-	NBL0	NBL0	-	Yes
PE1	-	NBL1	NBL1	-	Yes

Table 10. Alternate function mapping

Port		AF0	AF1	AF2	AF3	AF4	AF5	AF6	AF7	AF8	AF9	AF10	AF11	AF12	AF13	AF014	AF15
		SYS	TIM1/2	TIM3/4/5	TIM8/9/10/11	I2C1/I2C2/I2C3	SPI1/SPI2/I2S2	SPI3/I2S3	USART1/2/3	UART4/5/ USART6	CAN1/CAN2/ TIM12/13/14	OTG_FS/ OTG_HS	ETH	FSMC/SDIO/ OTG_HS	DCMI		
Port A	PA0-WKUP	-	TIM2_CH1_ETR	TIM 5_CH1	TIM8_ETR	-	-		USART2_CTS	UART4_TX	-	-	ETH_MII_CRS	-	-	-	EVENTOUT
	PA1	-	TIM2_CH2	TIM5_CH2	-	-	-		USART2_RTS	UART4_RX	-	-	ETH_MII _RX_CLK ETH_RMII _REF_CLK	-	-	-	EVENTOUT
	PA2	-	TIM2_CH3	TIM5_CH3	TIM9_CH1	-	-		USART2_TX	-	-	-	ETH_MDIO	-	-	-	EVENTOUT
	PA3	-	TIM2_CH4	TIM5_CH4	TIM9_CH2	-	-		USART2_RX	-	-	OTG_HS_ULPI_D0	ETH _MII_COL	-	-	-	EVENTOUT
	PA4	-	-	-	-	-	SPI1_NSS	SPI3_NSS I2S3_WS	USART2_CK	-	-		-	OTG_HS_SOF	DCMI_HSYNC	-	EVENTOUT
	PA5	-	TIM2_CH1_ETR	-	TIM8_CH1N	-	SPI1_SCK	-	-	-	-	OTG_HS_ULPI_C K	-	-	-	-	EVENTOUT
	PA6	-	TIM1_BKIN	TIM3_CH1	TIM8_BKIN	-	SPI1_MISO	-	-	-	TIM13_CH1	-	-	-	DCMI_PIXCK	-	EVENTOUT
	PA7	-	TIM1_CH1N	TIM3_CH2	TIM8_CH1N	-	SPI1_MOSI	-	-	-	TIM14_CH1	-	ETH_MII _RX_DV ETH_RMII _CRS_DV	-	-	-	EVENTOUT
	PA8	MCO1	TIM1_CH1	-	-	I2C3_SCL	-	-	USART1_CK	-	-	OTG_FS_SOF	-	-	-	-	EVENTOUT
	PA9	-	TIM1_CH2	-	-	I2C3_SMBA	-	-	USART1_TX	-	-		-	-	DCMI_D0	-	EVENTOUT
	PA10	-	TIM1_CH3	-	-	-	-	-	USART1_RX	-	-	OTG_FS_ID	-	-	DCMI_D1	-	EVENTOUT
	PA11	-	TIM1_CH4	-	-	-	-	-	USART1_CTS	-	CAN1_RX	OTG_FS_DM	-	-	-	-	EVENTOUT
	PA12	-	TIM1_ETR	-	-	-	-	-	USART1_RTS	-	CAN1_TX	OTG_FS_DP	-	-	-	-	EVENTOUT
	PA13	JTMS-SWDIO	-	-	-	-	-	-	-	-	-	-	-	-	-	-	EVENTOUT
	PA14	JTCK-SWCLK	-	-	-	-	-	-	-	-	-	-	-	-	-	-	EVENTOUT
	PA15	JTDI	TIM 2_CH1 TIM 2_ETR	-	-	-	SPI1_NSS	SPI3_NSS I2S3_WS	-	-	-	-	-	-	-	-	EVENTOUT

Table 10. Alternate function mapping (continued)

Port		AF0	AF1	AF2	AF3	AF4	AF5	AF6	AF7	AF8	AF9	AF10	AF11	AF12	AF13	AF014	AF15
		SYS	TIM1/2	TIM3/4/5	TIM8/9/10/11	I2C1/I2C2/I2C3	SPI1/SPI2/I2S2	SPI3/I2S3	USART1/2/3	UART4/5/ USART6	CAN1/CAN2/ TIM12/13/14	OTG_FS/ OTG_HS	ETH	FSMC/SDIO/ OTG_HS	DCMI		
Port B	PB0	-	TIM1_CH2N	TIM3_CH3	TIM8_CH2N	-	-	-	-	-	-	OTG_HS_ULPI_D1	ETH _MII_RXD2	-	-	-	EVENTOUT
	PB1	-	TIM1_CH3N	TIM3_CH4	TIM8_CH3N	-	-	-	-	-	-	OTG_HS_ULPI_D2	ETH _MII_RXD3	-	-	-	EVENTOUT
	PB2	-	-	-	-	-	-	-	-	-	-	-	-	-	-	-	EVENTOUT
	PB3	JTDO/ TRACESWO	TIM2_CH2	-	-	-	SPI1_SCK	SPI3_SCK I2S3_SCK	-	-	-	-	-	-	-	-	EVENTOUT
	PB4	JTRST	-	TIM3_CH1	-	-	SPI1_MISO	SPI3_MISO	-	-	-	-	-	-	-	-	EVENTOUT
	PB5	-	-	TIM3_CH2	-	I2C1_SMBA	SPI1_MOSI	SPI3_MOSI I2S3_SD	-	-	CAN2_RX	OTG_HS_ULPI_D7	ETH _PPS_OUT	-	DCMI_D10	-	EVENTOUT
	PB6	-	-	TIM4_CH1	-	I2C1_SCL	-	-	USART1_TX	-	CAN2_TX	-	-	-	DCMI_D5	-	EVENTOUT
	PB7	-	-	TIM4_CH2	-	I2C1_SDA	-	-	USART1_RX	-	-	-	-	FSMC_NL	DCMI_VSYNC	-	EVENTOUT
	PB8	-	-	TIM4_CH3	TIM10_CH1	I2C1_SCL	-	-	-	-	CAN1_RX	-	ETH _MII_TXD3	SDIO_D4	DCMI_D6	-	EVENTOUT
	PB9	-	-	TIM4_CH4	TIM11_CH1	I2C1_SDA	SPI2_NSS I2S2_WS	-	-	-	CAN1_TX	-	-	SDIO_D5	DCMI_D7	-	EVENTOUT
	PB10	-	TIM2_CH3	-	-	I2C2_SCL	SPI2_SCK I2S2_SCK	-	USART3_TX	-	-	OTG_HS_ULPI_D3	ETH_ MII_RX_ER	-	-	-	EVENTOUT
	PB11	-	TIM2_CH4	-	-	I2C2_SDA	-	-	USART3_RX	-	-	OTG_HS_ULPI_D4	ETH _MII_TX_EN ETH _RMII_TX_EN	-	-	-	EVENTOUT
	PB12	-	TIM1_BKIN	-	-	I2C2_SMBA	SPI2_NSS I2S2_WS	-	USART3_CK	-	CAN2_RX	OTG_HS_ULPI_D5	ETH _MII_TXD0 ETH _RMII_TXD0	OTG_HS_ID	-	-	EVENTOUT
	PB13	-	TIM1_CH1N	-	-	-	SPI2_SCK I2S2_SCK	-	USART3_CTS	-	CAN2_TX	OTG_HS_ULPI_D6	ETH _MII_TXD1 ETH _RMII_TXD1	-	-	-	EVENTOUT
	PB14	-	TIM1_CH2N	-	TIM8_CH2N	-	SPI2_MISO	-	USART3_RTS	-	TIM12_CH1	-	-	OTG_HS_DM	-	-	EVENTOUT
	PB15	RTC_50Hz	TIM1_CH3N	-	TIM8_CH3N	-	SPI2_MOSI I2S2_SD	-	-	-	TIM12_CH2	-	-	OTG_HS_DP	-	-	EVENTOUT

Table 10. Alternate function mapping (continued)

Port		AF0	AF1	AF2	AF3	AF4	AF5	AF6	AF7	AF8	AF9	AF10	AF11	AF12	AF13	AF014	AF15
		SYS	TIM1/2	TIM3/4/5	TIM8/9/10/11	I2C1/I2C2/I2C3	SPI1/SPI2/I2S2	SPI3/I2S3	USART1/2/3	UART4/5/ USART6	CAN1/CAN2/ TIM12/13/14	OTG_FS/ OTG_HS	ETH	FSMC/SDIO/ OTG_HS	DCMI		
Port C	PC0	-	-	-	-	-	-	-	-	-	-	OTG_HS_ULPI_ STP	-	-	-	-	EVENTOUT
	PC1	-	-	-	-	-	-	-	-	-	-	-	ETH_MDC	-	-	-	EVENTOUT
	PC2	-	-	-	-	-	SPI2_MISO	-	-	-	-	OTG_HS_ULPI_ DIR	ETH _MII_TXD2	-	-	-	EVENTOUT
	PC3	-	-	-	-	-	SPI2_MOSI	-	-	-	-	OTG_HS_ULPI_ NXT	ETH _MII_TX_CLK	-	-	-	EVENTOUT
	PC4	-	-	-	-	-	-	-	-	-	-	-	ETH_MII_RXD0 ETH_RMII_RXD0	-	-	-	EVENTOUT
	PC5	-	-	-	-	-	-	-	-	-	-	-	ETH _MII_RXD1 ETH _RMII_RXD1	-	-	-	EVENTOUT
	PC6	-	-	TIM3_CH1	TIM8_CH1	-	I2S2_MCK	-	-	USART6_TX	-	-	-	SDIO_D6	DCMI_D0	-	EVENTOUT
	PC7	-	-	TIM3_CH2	TIM8_CH2	-	-	I2S3_MCK	-	USART6_RX	-	-	-	SDIO_D7	DCMI_D1	-	EVENTOUT
	PC8	-	-	TIM3_CH3	TIM8_CH3	-	-	-	-	USART6_CK	-	-	-	SDIO_D0	DCMI_D2	-	EVENTOUT
	PC9	MCO2	-	TIM3_CH4	TIM8_CH4	I2C3_SDA	I2S2_CKIN	I2S3_CKIN	-	-	-	-	-	SDIO_D1	DCMI_D3	-	EVENTOUT
	PC10	-	-	-	-	-	-	SPI3_SCK I2S3_SCK	USART3_TX	UART4_TX	-	-	-	SDIO_D2	DCMI_D8	-	EVENTOUT
	PC11	-	-	-	-	-	-	SPI3_MISO	USART3_RX	UART4_RX	-	-	-	SDIO_D3	DCMI_D4	-	EVENTOUT
	PC12	-	-	-	-	-	-	SPI3_MOSI I2S3_SD	USART3_CK	UART5_TX	-	-	-	SDIO_CK	DCMI_D9	-	EVENTOUT
	PC13	-	-	-	-	-	-	-	-	-	-	-	-	-	-	-	EVENTOUT
	PC14-OSC32_IN	-	-	-	-	-	-	-	-	-	-	-	-	-	-	-	EVENTOUT
	PC15-OSC32_OUT	-	-	-	-	-	-	-	-	-	-	-	-	-	-	-	EVENTOUT

Table 10. Alternate function mapping (continued)

Port		AF0	AF1	AF2	AF3	AF4	AF5	AF6	AF7	AF8	AF9	AF10	AF11	AF12	AF13	AF014	AF15
		SYS	TIM1/2	TIM3/4/5	TIM8/9/10/11	I2C1/I2C2/I2C3	SPI1/SPI2/I2S2	SPI3/I2S3	USART1/2/3	UART4/5/ USART6	CAN1/CAN2/ TIM12/13/14	OTG_FS/ OTG_HS	ETH	FSMC/SDIO/ OTG_HS	DCMI		
Port D	PD0	-	-	-	-	-	-	-	-	-	CAN1_RX	-	-	FSMC_D2	-	-	EVENTOUT
	PD1	-	-	-	-	-	-	-	-	-	CAN1_TX	-	-	FSMC_D3	-	-	EVENTOUT
	PD2	-	-	TIM3_ETR	-	-	-	-	-	UART5_RX	-	-	-	SDIO_CMD	DCMI_D11	-	EVENTOUT
	PD3	-	-	-	-	-	-	-	USART2_CTS	-	-	-	-	FSMC_CLK	-	-	EVENTOUT
	PD4	-	-	-	-	-	-	-	USART2_RTS	-	-	-	-	FSMC_NOE	-	-	EVENTOUT
	PD5	-	-	-	-	-	-	-	USART2_TX	-	-	-	-	FSMC_NWE	-	-	EVENTOUT
	PD6	-	-	-	-	-	-	-	USART2_RX	-	-	-	-	FSMC_NWAIT	-	-	EVENTOUT
	PD7	-	-	-	-	-	-	-	USART2_CK	-	-	-	-	FSMC_NE1/ FSMC_NCE2	-	-	EVENTOUT
	PD8	-	-	-	-	-	-	-	USART3_TX	-	-	-	-	FSMC_D13	-	-	EVENTOUT
	PD9	-	-	-	-	-	-	-	USART3_RX	-	-	-	-	FSMC_D14	-	-	EVENTOUT
	PD10	-	-	-	-	-	-	-	USART3_CK	-	-	-	-	FSMC_D15	-	-	EVENTOUT
	PD11	-	-	-	-	-	-	-	USART3_CTS	-	-	-	-	FSMC_A16	-	-	EVENTOUT
	PD12	-	-	TIM4_CH1	-	-	-	-	USART3_RTS	-	-	-	-	FSMC_A17	-	-	EVENTOUT
	PD13	-	-	TIM4_CH2	-	-	-	-	-	-	-	-	-	FSMC_A18	-	-	EVENTOUT
	PD14	-	-	TIM4_CH3	-	-	-	-	-	-	-	-	-	FSMC_D0	-	-	EVENTOUT
	PD15	-	-	TIM4_CH4	-	-	-	-	-	-	-	-	-	FSMC_D1	-	-	EVENTOUT
Port E	PE0	-	-	TIM4_ETR	-	-	-	-	-	-	-	-	-	FSMC_NBL0	DCMI_D2	-	EVENTOUT
	PE1	-	-	-	-	-	-	-	-	-	-	-	-	FSMC_NBL1	DCMI_D3	-	EVENTOUT
	PE2	TRACECLK	-	-	-	-	-	-	-	-	-	-	ETH _MII_TXD3	FSMC_A23	-	-	EVENTOUT
	PE3	TRACED0	-	-	-	-	-	-	-	-	-	-	-	FSMC_A19	-	-	EVENTOUT
	PE4	TRACED1	-	-	-	-	-	-	-	-	-	-	-	FSMC_A20	DCMI_D4	-	EVENTOUT
	PE5	TRACED2	-	-	TIM9_CH1	-	-	-	-	-	-	-	-	FSMC_A21	DCMI_D6	-	EVENTOUT
	PE6	TRACED3	-	-	TIM9_CH2	-	-	-	-	-	-	-	-	FSMC_A22	DCMI_D7	-	EVENTOUT
	PE7	-	TIM1_ETR	-	-	-	-	-	-	-	-	-	-	FSMC_D4	-	-	EVENTOUT
	PE8	-	TIM1_CH1N	-	-	-	-	-	-	-	-	-	-	FSMC_D5	-	-	EVENTOUT
	PE9	-	TIM1_CH1	-	-	-	-	-	-	-	-	-	-	FSMC_D6	-	-	EVENTOUT
	PE10	-	TIM1_CH2N	-	-	-	-	-	-	-	-	-	-	FSMC_D7	-	-	EVENTOUT
	PE11	-	TIM1_CH2	-	-	-	-	-	-	-	-	-	-	FSMC_D8	-	-	EVENTOUT
	PE12	-	TIM1_CH3N	-	-	-	-	-	-	-	-	-	-	FSMC_D9	-	-	EVENTOUT
	PE13	-	TIM1_CH3	-	-	-	-	-	-	-	-	-	-	FSMC_D10	-	-	EVENTOUT
	PE14	-	TIM1_CH4	-	-	-	-	-	-	-	-	-	-	FSMC_D11	-	-	EVENTOUT
	PE15	-	TIM1_BKIN	-	-	-	-	-	-	-	-	-	-	FSMC_D12	-	-	EVENTOUT

Table 10. Alternate function mapping (continued)

Port		AF0	AF1	AF2	AF3	AF4	AF5	AF6	AF7	AF8	AF9	AF10	AF11	AF12	AF13	AF014	AF15
		SYS	TIM1/2	TIM3/4/5	TIM8/9/10/11	I2C1/I2C2/I2C3	SPI1/SPI2/I2S2	SPI3/I2S3	USART1/2/3	UART4/5/ USART6	CAN1/CAN2/ TIM12/13/14	OTG_FS/ OTG_HS	ETH	FSMC/SDIO/ OTG_HS	DCMI		
Port F	PF0	-	-	-	-	I2C2_SDA	-	-	-	-	-	-	-	FSMC_A0	-	-	EVENTOUT
	PF1	-	-	-	-	I2C2_SCL		-	-	-	-	-	-	FSMC_A1	-	-	EVENTOUT
	PF2	-	-	-	-	I2C2_SMBA	-	-	-	-	-	-	-	FSMC_A2	-	-	EVENTOUT
	PF3	-	-	-	-	-	-	-	-	-	-	-	-	FSMC_A3	-	-	EVENTOUT
	PF4	-	-	-	-	-	-	-	-	-	-	-	-	FSMC_A4	-	-	EVENTOUT
	PF5	-	-	-	-	-	-	-	-	-	-	-	-	FSMC_A5	-	-	EVENTOUT
	PF6	-	-	-	TIM10_CH1	-	-	-	-	-	-	-	-	FSMC_NIORD	-	-	EVENTOUT
	PF7	-	-	-	TIM11_CH1	-	-	-	-	-	-	-	-	FSMC_NREG	-	-	EVENTOUT
	PF8	-	-	-	-	-	-	-	-	-	TIM13_CH1	-	-	FSMC_NIOWR	-	-	EVENTOUT
	PF9	-	-	-	-	-	-	-	-	-	TIM14_CH1	-	-	FSMC_CD	-	-	EVENTOUT
	PF10	-	-	-	-	-	-	-	-	-	-	-	-	FSMC_INTR	-	-	EVENTOUT
	PF11	-	-	-	-	-	-	-	-	-	-	-	-		DCMI_D12	-	EVENTOUT
	PF12	-	-	-	-	-	-	-	-	-	-	-	-	FSMC_A6	-	-	EVENTOUT
	PF13	-	-	-	-	-	-	-	-	-	-	-	-	FSMC_A7	-	-	EVENTOUT
	PF14	-	-	-	-	-	-	-	-	-	-	-	-	FSMC_A8	-	-	EVENTOUT
	PF15	-	-	-	-	-	-	-	-	-	-	-	-	FSMC_A9	-	-	EVENTOUT
Port G	PG0	-	-	-	-	-	-	-	-	-	-	-	-	FSMC_A10	-	-	EVENTOUT
	PG1	-	-	-	-	-	-	-	-	-	-	-	-	FSMC_A11	-	-	EVENTOUT
	PG2	-	-	-	-	-	-	-	-	-	-	-	-	FSMC_A12	-	-	EVENTOUT
	PG3	-	-	-	-	-	-	-	-	-	-	-	-	FSMC_A13	-	-	EVENTOUT
	PG4	-	-	-	-	-	-	-	-	-	-	-	-	FSMC_A14	-	-	EVENTOUT
	PG5	-	-	-	-	-	-	-	-	-	-	-	-	FSMC_A15	-	-	EVENTOUT
	PG6	-	-	-	-	-	-	-	-	-	-	-	-	FSMC_INT2	-	-	EVENTOUT
	PG7	-	-	-	-	-	-	-	-	USART6_CK	-	-	-	FSMC_INT3	-	-	EVENTOUT
	PG8	-	-	-	-	-	-	-	-	USART6_RTS	-	-	ETH _PPS_OUT	-	-	-	EVENTOUT
	PG9	-	-	-	-	-	-	-	-	USART6_RX	-	-	-	FSMC_NE2/ FSMC_NCE3	-	-	EVENTOUT
	PG10	-	-	-	-	-	-	-	-	-	-	-	-	FSMC_NCE4_1/ FSMC_NE3	-	-	EVENTOUT
	PG11	-	-	-	-	-	-	-	-	-	-	-	ETH _MII_TX_EN ETH _RMII_TX_EN	FSMC_NCE4_2	-	-	EVENTOUT
	PG12	-	-	-	-	-	-	-	-	USART6_RTS	-	-	-	FSMC_NE4	-	-	EVENTOUT
	PG13	-	-	-	-	-	-	-	-	UART6_CTS	-	-	ETH _MII_TXD0 ETH _RMII_TXD0	FSMC_A24	-	-	EVENTOUT
	PG14	-	-	-	-	-	-	-	-	USART6_TX	-	-	ETH _MII_TXD1 ETH _RMII_TXD1	FSMC_A25	-	-	EVENTOUT
	PG15	-	-	-	-	-	-	-	-	USART6_CTS	-	-	-	-	DCMI_D13	-	EVENTOUT

Table 10. Alternate function mapping (continued)

Port		AF0	AF1	AF2	AF3	AF4	AF5	AF6	AF7	AF8	AF9	AF10	AF11	AF12	AF13	AF014	AF15
		SYS	TIM1/2	TIM3/4/5	TIM8/9/10/11	I2C1/I2C2/I2C3	SPI1/SPI2/I2S2	SPI3/I2S3	USART1/2/3	UART4/5/ USART6	CAN1/CAN2/ TIM12/13/14	OTG_FS/ OTG_HS	ETH	FSMC/SDIO/ OTG_HS	DCMI		
Port H	PH0 - OSC_IN	-	-	-	-	-	-	-	-	-	-	-	-	-	-	-	EVENTOUT
	PH1 - OSC_OUT	-	-				-	-	-	-	-	-	-	-	-	-	EVENTOUT
	PH2	-	-				-	-	-	-	-	-	ETH _MII_CRS	-	-	-	EVENTOUT
	PH3	-	-				-	-	-	-	-	-	ETH _MII_COL	-	-	-	EVENTOUT
	PH4	-	-			I2C2_SCL	-	-	-	-	-	OTG_HS_ULPI_N XT	-	-	-	-	EVENTOUT
	PH5	-	-			I2C2_SDA	-	-	-	-	-	-	-	-	-	-	EVENTOUT
	PH6	-	-			I2C2_SMBA	-	-	-	-	TIM12_CH1	-	ETH _MII_RXD2	-	-	-	EVENTOUT
	PH7	-	-			I2C3_SCL	-	-	-	-	-	-	ETH _MII_RXD3	-	-	-	EVENTOUT
	PH8	-	-			I2C3_SDA	-	-	-	-	-	-	-	-	DCMI_HSYNC	-	EVENTOUT
	PH9	-	-			I2C3_SMBA	-	-	-	-	TIM12_CH2	-	-	-	DCMI_D0	-	EVENTOUT
	PH10	-	-	TIM5_CH1			-	-	-	-	-	-	-	-	DCMI_D1	-	EVENTOUT
	PH11	-	-	TIM5_CH2			-	-	-	-	-	-	-	-	DCMI_D2	-	EVENTOUT
	PH12	-	-	TIM5_CH3			-	-	-	-	-	-	-	-	DCMI_D3	-	EVENTOUT
	PH13	-	-		TIM8_CH1N		-	-	-	-	CAN1_TX	-	-	-	-	-	EVENTOUT
	PH14	-	-		TIM8_CH2N		-	-	-	-	-	-	-	-	DCMI_D4	-	EVENTOUT
	PH15	-	-		TIM8_CH3N		-	-	-	-	-	-	-	-	DCMI_D11	-	EVENTOUT
Port I	PI0	-	-	TIM5_CH4			SPI2_NSS I2S2_WS	-	-	-	-	-	-	-	DCMI_D13	-	EVENTOUT
	PI1	-	-				SPI2_SCK I2S2_SCK	-	-	-	-	-	-	-	DCMI_D8	-	EVENTOUT
	PI2	-	-		TIM8_CH4		SPI2_MISO	-	-	-	-	-	-	-	DCMI_D9	-	EVENTOUT
	PI3	-	-		TIM8_ETR		SPI2_MOSI I2S2_SD	-	-	-	-	-	-	-	DCMI_D10	-	EVENTOUT
	PI4	-	-		TIM8_BKIN		-	-	-	-	-	-	-	-	DCMI_D5	-	EVENTOUT
	PI5	-	-		TIM8_CH1		-	-	-	-	-	-	-	-	DCMI_VSYNC	-	EVENTOUT
	PI6	-	-		TIM8_CH2		-	-	-	-	-	-	-	-	DCMI_D6	-	EVENTOUT
	PI7	-	-		TIM8_CH3		-	-	-	-	-	-	-	-	DCMI_D7	-	EVENTOUT
	PI8	-	-				-	-	-	-	-	-	-	-	-	-	EVENTOUT
	PI9	-	-				-	-	-	-	CAN1_RX	-	-	-	-	-	EVENTOUT
	PI10	-	-				-	-	-	-	-	-	ETH _MII_RX_ER	-	-	-	EVENTOUT
	PI11	-	-				-	-	-	-	-	OTG_HS_ULPI_ DIR	-	-	-	-	EVENTOUT

5 Memory mapping

The memory map is shown in *Figure 16*.

Figure 16. Memory map

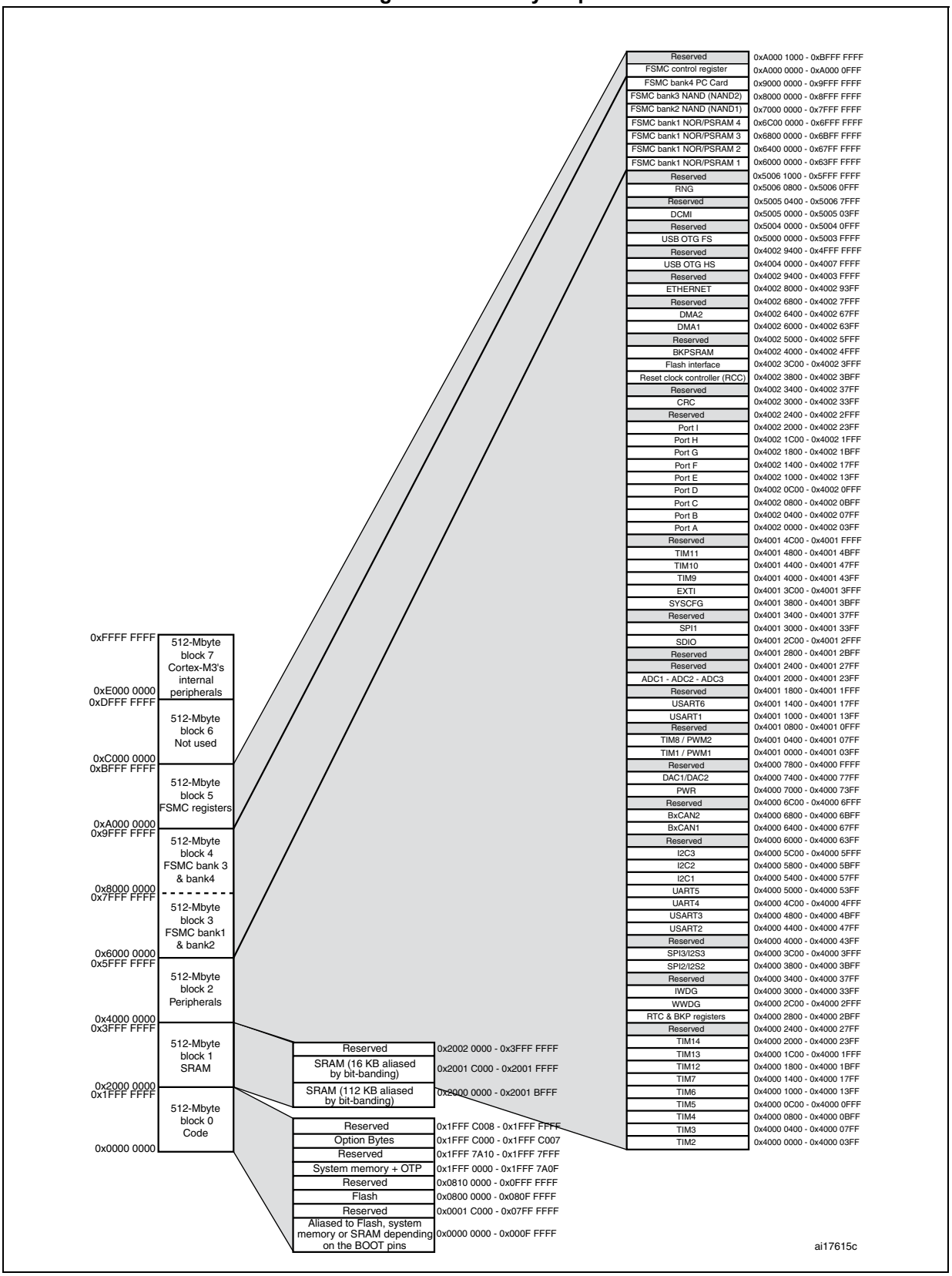

6 Electrical characteristics

6.1 Parameter conditions

Unless otherwise specified, all voltages are referenced to V_{SS}.

6.1.1 Minimum and maximum values

Unless otherwise specified the minimum and maximum values are guaranteed in the worst conditions of ambient temperature, supply voltage and frequencies by tests in production on 100% of the devices with an ambient temperature at T_A = 25 °C and T_A = $T_A$max (given by the selected temperature range).

Data based on characterization results, design simulation and/or technology characteristics are indicated in the table footnotes and are not tested in production. Based on characterization, the minimum and maximum values refer to sample tests and represent the mean value plus or minus three times the standard deviation (mean±3Σ).

6.1.2 Typical values

Unless otherwise specified, typical data are based on T_A = 25 °C, V_{DD} = 3.3 V (for the 1.8 V ≤V_{DD} ≤3.6 V voltage range). They are given only as design guidelines and are not tested.

Typical ADC accuracy values are determined by characterization of a batch of samples from a standard diffusion lot over the full temperature range, where 95% of the devices have an error less than or equal to the value indicated (mean±2Σ).

6.1.3 Typical curves

Unless otherwise specified, all typical curves are given only as design guidelines and are not tested.

6.1.4 Loading capacitor

The loading conditions used for pin parameter measurement are shown in *Figure 17*.

6.1.5 Pin input voltage

The input voltage measurement on a pin of the device is described in *Figure 18*.

Figure 17. Pin loading conditions

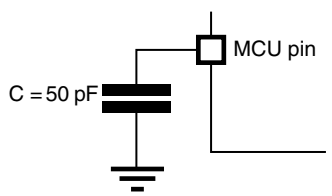

Figure 18. Pin input voltage

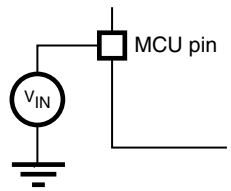

6.1.6 Power supply scheme

Figure 19. Power supply scheme

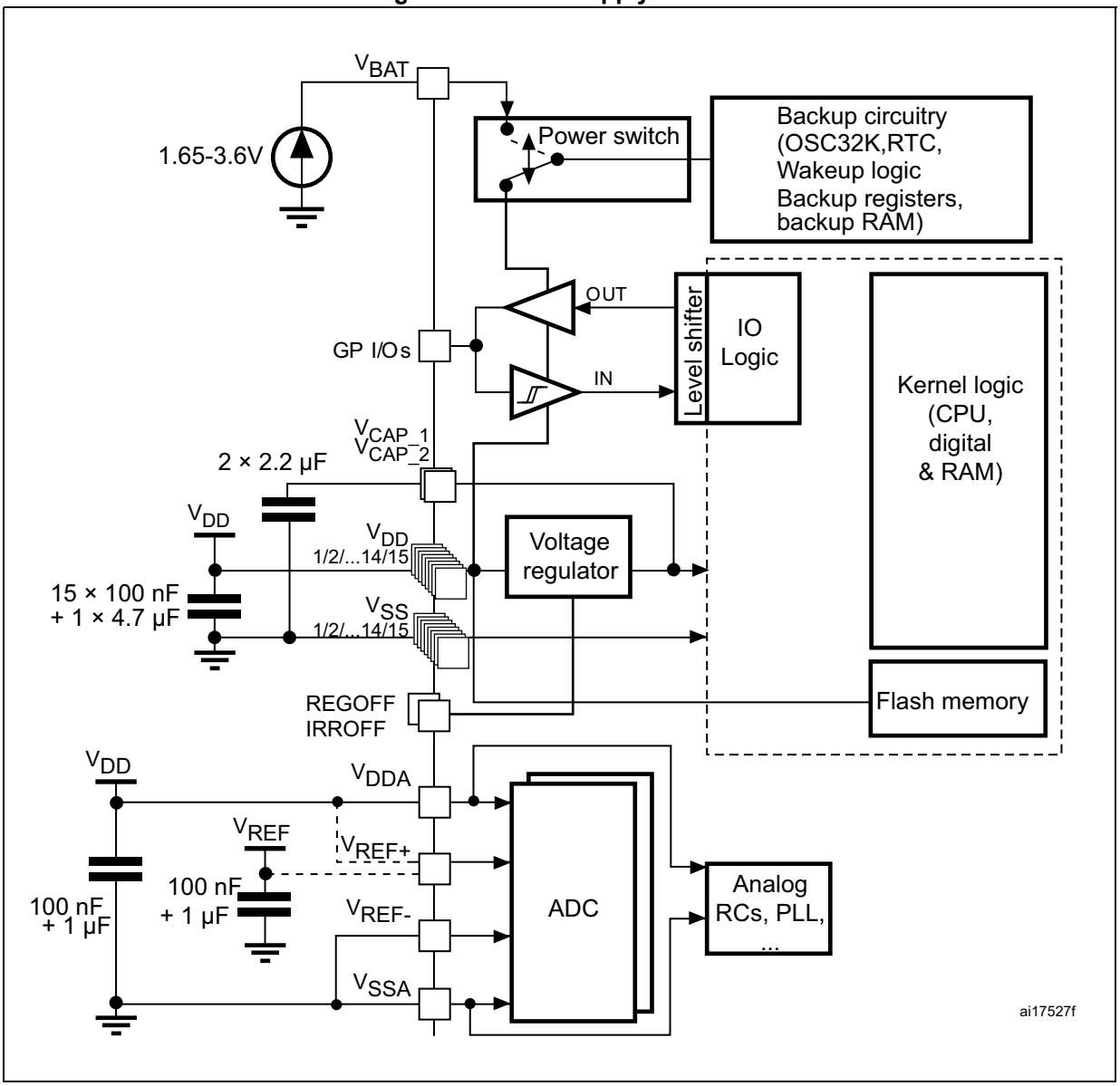

1. Each power supply pair must be decoupled with filtering ceramic capacitors as shown above. These capacitors must be placed as close as possible to, or below, the appropriate pins on the underside of the PCB to ensure the good functionality of the device.
2. To connect REGOFF and IRROFF pins, refer to *Section 3.16: Voltage regulator*.
3. The two 2.2 µF ceramic capacitors should be replaced by two 100 nF decoupling capacitors when the voltage regulator is OFF.
4. The 4.7 µF ceramic capacitor must be connected to one of the V_{DD} pin.

Caution: Each power supply pair (V_{DD}/V_{SS}, V_{DDA}/V_{SSA} ...) must be decoupled with filtering ceramic capacitors as shown above. These capacitors must be placed as close as possible to, or below, the appropriate pins on the underside of the PCB, to ensure good device operation. It is not recommended to remove filtering capacitors to reduce PCB size or cost. This might cause incorrect device operation.

6.1.7 Current consumption measurement

Figure 20. Current consumption measurement scheme

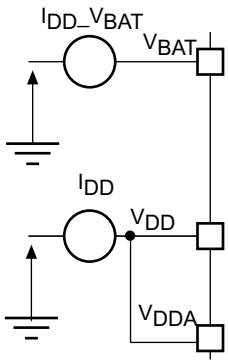

6.2 Absolute maximum ratings

Stresses above the absolute maximum ratings listed in *Table 11: Voltage characteristics*, *Table 12: Current characteristics*, and *Table 13: Thermal characteristics* may cause permanent damage to the device. These are stress ratings only and functional operation of the device at these conditions is not implied. Exposure to maximum rating conditions for extended periods may affect device reliability.

Table 11. Voltage characteristics

Symbol	Ratings	Min	Max	Unit
$V_{DD}–V_{SS}$	External main supply voltage (including V_{DDA}, V_{DD})(1)	–0.3	4.0	V
V_{IN}	Input voltage on five-volt tolerant pin(2)	V_{SS}–0.3	V_{DD}+4	
	Input voltage on any other pin	V_{SS}–0.3	4.0	
$\|\Delta V_{DDx}\|$	Variations between different V_{DD} power pins	-	50	mV
$\|V_{SSX} – V_{SS}\|$	Variations between all the different ground pins	-	50	
$V_{ESD(HBM)}$	Electrostatic discharge voltage (human body model)	see *Section 6.3.14: Absolute maximum ratings (electrical sensitivity)*		-

1. All main power (V_{DD}, V_{DDA}) and ground (V_{SS}, V_{SSA}) pins must always be connected to the external power supply, in the permitted range.
2. V_{IN} maximum value must always be respected. Refer to *Table 12* for the values of the maximum allowed injected current.

Table 12. Current characteristics

Symbol	Ratings	Max	Unit
I_{VDD}	Total current into V_{DD} power lines (source)(1)	120	mA
I_{VSS}	Total current out of V_{SS} ground lines (sink)(1)	120	
I_{IO}	Output current sunk by any I/O and control pin	25	
	Output current source by any I/Os and control pin	25	
$I_{INJ(PIN)}$ (2)	Injected current on five-volt tolerant I/O(3)	–5/+0	
	Injected current on any other pin(4)	±5	
$\Sigma I_{INJ(PIN)}$(4)	Total injected current (sum of all I/O and control pins)(5)	±25	

1. All main power (V_{DD}, V_{DDA}) and ground (V_{SS}, V_{SSA}) pins must always be connected to the external power supply, in the permitted range.
2. Negative injection disturbs the analog performance of the device. See note in *Section 6.3.20: 12-bit ADC characteristics*.
3. Positive injection is not possible on these I/Os. A negative injection is induced by $V_{IN}<V_{SS}$. $I_{INJ(PIN)}$ must never be exceeded. Refer to *Table 11* for the values of the maximum allowed input voltage.
4. A positive injection is induced by $V_{IN}>V_{DD}$ while a negative injection is induced by $V_{IN}<V_{SS}$. $I_{INJ(PIN)}$ must never be exceeded. Refer to *Table 11* for the values of the maximum allowed input voltage.
5. When several inputs are submitted to a current injection, the maximum $\Sigma I_{INJ(PIN)}$ is the absolute sum of the positive and negative injected currents (instantaneous values).

Table 13. Thermal characteristics

Symbol	Ratings	Value	Unit
T_{STG}	Storage temperature range	–65 to +150	°C
T_J	Maximum junction temperature	125	°C

6.3 Operating conditions

6.3.1 General operating conditions

Table 14. General operating conditions

Symbol	Parameter	Conditions	Min	Max	Unit
f_{HCLK}	Internal AHB clock frequency	-	0	120	MHz
f_{PCLK1}	Internal APB1 clock frequency	-	0	30	
f_{PCLK2}	Internal APB2 clock frequency	-	0	60	

Table 14. General operating conditions (continued)

Symbol	Parameter	Conditions	Min	Max	Unit
V_{DD}	Standard operating voltage	-	1.8(1)	3.6	V
V_{DDA}(2)	Analog operating voltage (ADC limited to 1 M samples)	Must be the same potential as V_{DD}(3)	1.8(1)	3.6	
	Analog operating voltage (ADC limited to 2 M samples)		2.4	3.6	
V_{BAT}	Backup operating voltage	-	1.65	3.6	
V_{IN}	Input voltage on RST and FT pins	2 V ≤ V_{DD} ≤ 3.6 V	–0.3	5.5	
		1.7 V ≤ V_{DD} ≤ 2 V	–0.3	5.2	
	Input voltage on TTa pins	-	–0.3	V_{DD}+0.3	
	Input voltage on BOOT0 pin	-	0	9	
V_{CAP1}	Internal core voltage to be supplied externally in REGOFF mode	-	1.1	1.3	
V_{CAP2}					
P_D	Power dissipation at T_A = 85 °C for suffix 6 or T_A = 105 °C for suffix 7(4)	LQFP64	-	444	mW
		WLCSP64+2	-	392	
		LQFP100	-	434	
		LQFP144	-	500	
		LQFP176	-	526	
		UFBGA176	-	513	
T_A	Ambient temperature for 6 suffix version	Maximum power dissipation	–40	85	°C
		Low-power dissipation(5)	–40	105	
	Ambient temperature for 7 suffix version	Maximum power dissipation	–40	105	°C
		Low-power dissipation(5)	–40	125	
T_J	Junction temperature range	6 suffix version	–40	105	°C
		7 suffix version	–40	125	

1. On devices in WLCSP64+2 package, if IRROFF is set to V_{DD}, the supply voltage can drop to 1.7 V when the device operates in the 0 to 70 °C temperature range using an external power supply supervisor (see *Section 3.16*).
2. When the ADC is used, refer to *Table 66: ADC characteristics*.
3. It is recommended to power V_{DD} and V_{DDA} from the same source. A maximum difference of 300 mV between V_{DD} and V_{DDA} can be tolerated during power-up and power-down operation.
4. If T_A is lower, higher P_D values are allowed as long as T_J does not exceed T_{Jmax}.
5. In low-power dissipation state, T_A can be extended to this range as long as T_J does not exceed T_{Jmax}.

Table 15. Limitations depending on the operating power supply range

Operating power supply range	ADC operation	Maximum Flash memory access frequency ($f_{Flashmax}$)	Number of wait states at maximum CPU frequency (f_{CPUmax}= 120 MHz)(1)	I/O operation	FSMC_CLK frequency for synchronous accesses	Possible Flash memory operations
V_{DD} =1.8 to 2.1 V(2)	Conversion time up to 1 Msps	16 MHz with no Flash memory wait state	7(3)	– Degraded speed performance – No I/O compensation	Up to 30 MHz	8-bit erase and program operations only
V_{DD} = 2.1 to 2.4 V	Conversion time up to 1 Msps	18 MHz with no Flash memory wait state	6(3)	– Degraded speed performance – No I/O compensation	Up to 30 MHz	16-bit erase and program operations
V_{DD} = 2.4 to 2.7 V	Conversion time up to 2 Msps	24 MHz with no Flash memory wait state	4(3)	– Degraded speed performance – I/O compensation works	Up to 48 MHz	16-bit erase and program operations
V_{DD} = 2.7 to 3.6 V(4)	Conversion time up to 2 Msps	30 MHz with no Flash memory wait state	3(3)	– Full-speed operation – I/O compensation works	– Up to 60 MHz when V_{DD} = 3.0 to 3.6 V – Up to 48 MHz when V_{DD} = 2.7 to 3.0 V	32-bit erase and program operations

1. The number of wait states can be reduced by reducing the CPU frequency (see *Figure 21*).
2. On devices in WLCSP64+2 package, if IRROFF is set to V_{DD}, the supply voltage can drop to 1.7 V when the device operates in the 0 to 70 °C temperature range using an external power supply supervisor (see *Section 3.16*).
3. Thanks to the ART accelerator and the 128-bit Flash memory, the number of wait states given here does not impact the execution speed from Flash memory since the ART accelerator allows to achieve a performance equivalent to 0 wait state program execution.
4. The voltage range for OTG USB FS can drop down to 2.7 V. However it is degraded between 2.7 and 3 V.

Figure 21. Number of wait states versus f_{CPU} and V_{DD} range

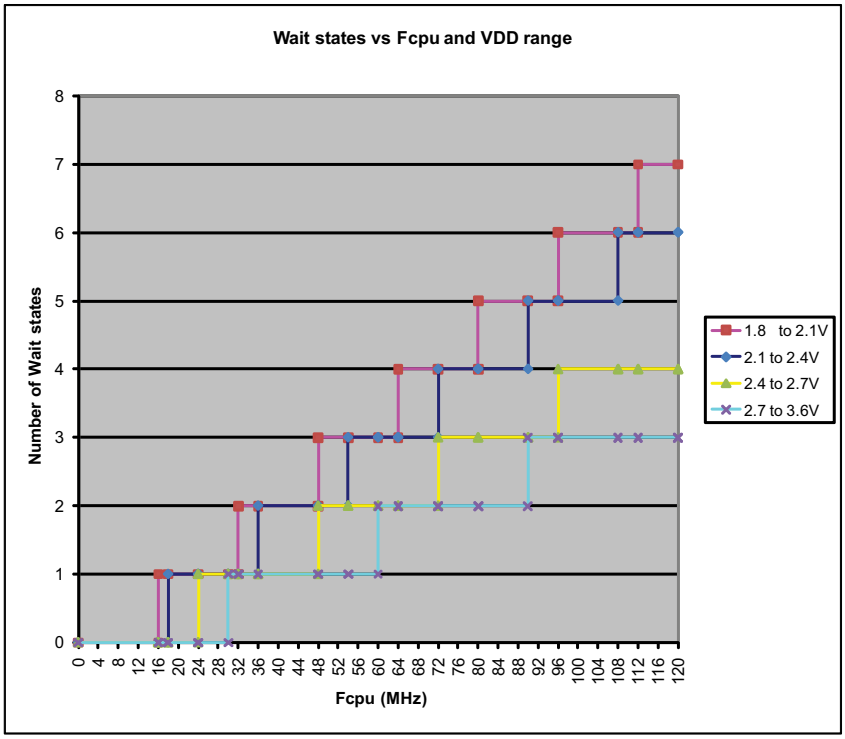

1. The supply voltage can drop to 1.7 V when the device operates in the 0 to 70 °C temperature range and IRROFF is set to V_{DD}.

6.3.2 VCAP1/VCAP2 external capacitor

Stabilization for the main regulator is achieved by connecting an external capacitor to the VCAP1/VCAP2 pins. C_{EXT} is specified in *Table 16*.

Figure 22. External capacitor C_{EXT}

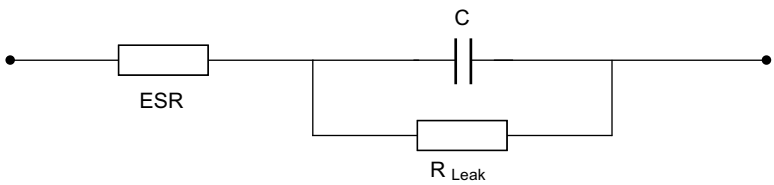

1. Legend: ESR is the equivalent series resistance.

Table 16. VCAP1/VCAP2 operating conditions(1)

Symbol	Parameter	Conditions
CEXT	Capacitance of external capacitor	2.2 µF
ESR	ESR of external capacitor	< 2 Ω

1. When bypassing the voltage regulator, the two 2.2 µF V_{CAP} capacitors are not required and should be replaced by two 100 nF decoupling capacitors.

6.3.3 Operating conditions at power-up / power-down (regulator ON)

Subject to general operating conditions for T_A.

Table 17. Operating conditions at power-up / power-down (regulator ON)

Symbol	Parameter	Min	Max	Unit
t_{VDD}	V_{DD} rise time rate	20	∞	µs/V
	V_{DD} fall time rate	20	∞	

6.3.4 Operating conditions at power-up / power-down (regulator OFF)

Subject to general operating conditions for T_A.

Table 18. Operating conditions at power-up / power-down (regulator OFF)

Symbol	Parameter	Conditions	Min	Max	Unit
t_{VDD}	V_{DD} rise time rate	Power-up	20	∞	µs/V
	V_{DD} fall time rate	Power-down	20	∞	
t_{VCAP}	V_{CAP_1} and V_{CAP_2} rise time rate	Power-up	20	∞	
	V_{CAP_1} and V_{CAP_2} fall time rate	Power-down	20	∞	

6.3.5 Embedded reset and power control block characteristics

The parameters given in *Table 19* are derived from tests performed under ambient temperature and V_{DD} supply voltage conditions summarized in *Table 14*.

Table 19. Embedded reset and power control block characteristics

Symbol	Parameter	Conditions	Min	Typ	Max	Unit
V_{PVD}	Programmable voltage detector level selection	PLS[2:0]=000 (rising edge)	2.09	2.14	2.19	V
		PLS[2:0]=000 (falling edge)	1.98	2.04	2.08	V
		PLS[2:0]=001 (rising edge)	2.23	2.30	2.37	V
		PLS[2:0]=001 (falling edge)	2.13	2.19	2.25	V
		PLS[2:0]=010 (rising edge)	2.39	2.45	2.51	V
		PLS[2:0]=010 (falling edge)	2.29	2.35	2.39	V
		PLS[2:0]=011 (rising edge)	2.54	2.60	2.65	V
		PLS[2:0]=011 (falling edge)	2.44	2.51	2.56	V
		PLS[2:0]=100 (rising edge)	2.70	2.76	2.82	V
		PLS[2:0]=100 (falling edge)	2.59	2.66	2.71	V
		PLS[2:0]=101 (rising edge)	2.86	2.93	2.99	V
		PLS[2:0]=101 (falling edge)	2.65	2.84	3.02	V
		PLS[2:0]=110 (rising edge)	2.96	3.03	3.10	V
		PLS[2:0]=110 (falling edge)	2.85	2.93	2.99	V
		PLS[2:0]=111 (rising edge)	3.07	3.14	3.21	V
		PLS[2:0]=111 (falling edge)	2.95	3.03	3.09	V
$V_{PVDhyst}$(1)	PVD hysteresis	-	-	100	-	mV
$V_{POR/PDR}$	Power-on/power-down reset threshold	Falling edge	1.60	1.68	1.76	V
		Rising edge	1.64	1.72	1.80	V
$V_{PDRhyst}$(1)	PDR hysteresis	-	-	40	-	mV
V_{BOR1}	Brownout level 1 threshold	Falling edge	2.13	2.19	2.24	V
		Rising edge	2.23	2.29	2.33	V

Table 19. Embedded reset and power control block characteristics (continued)

Symbol	Parameter	Conditions	Min	Typ	Max	Unit
V_{BOR2}	Brownout level 2 threshold	Falling edge	2.44	2.50	2.56	V
		Rising edge	2.53	2.59	2.63	V
V_{BOR3}	Brownout level 3 threshold	Falling edge	2.75	2.83	2.88	V
		Rising edge	2.85	2.92	2.97	V
$V_{BORhyst}$(1)	BOR hysteresis	-	-	100	-	mV
$T_{RSTTEMPO}$(1)(2)	Reset temporization	-	0.5	1.5	3.0	ms
I_{RUSH}(1)	InRush current on voltage regulator power-on (POR or wakeup from Standby)	-	-	160	200	mA
E_{RUSH}(1)	InRush energy on voltage regulator power-on (POR or wakeup from Standby)	V_{DD} = 1.8 V, T_A = 105 °C, I_{RUSH} = 171 mA for 31 µs	-	-	5.4	µC

1. Guaranteed by design, not tested in production.
2. The reset temporization is measured from the power-on (POR reset or wakeup from V_{BAT}) to the instant when first instruction is read by the user application code.

6.3.6 Supply current characteristics

The current consumption is a function of several parameters and factors such as the operating voltage, ambient temperature, I/O pin loading, device software configuration, operating frequencies, I/O pin switching rate, program location in memory and executed binary code.

The current consumption is measured as described in *Figure 20: Current consumption measurement scheme*.

All Run mode current consumption measurements given in this section are performed using CoreMark® code.

Typical and maximum current consumption

The MCU is placed under the following conditions:

- At startup, all I/O pins are configured as analog inputs by firmware.
- All peripherals are disabled except if it is explicitly mentioned.
- The Flash memory access time is adjusted to f_{HCLK} frequency (0 wait state from 0 to 30 MHz, 1 wait state from 30 to 60 MHz, 2 wait states from 60 to 90 MHz and 3 wait states from 90 to 120 MHz).
- When the peripherals are enabled HCLK is the system clock, $f_{PCLK1} = f_{HCLK}/4$, and $f_{PCLK2} = f_{HCLK}/2$, except is explicitly mentioned.
- The maximum values are obtained for V_{DD} = 3.6 V and maximum ambient temperature (T_A), and the typical values for T_A= 25 °C and V_{DD} = 3.3 V unless otherwise specified.

Table 20. Typical and maximum current consumption in Run mode, code with data processing running from Flash memory (ART accelerator enabled) or RAM (1)

Symbol	Parameter	Conditions	f_{HCLK}	Typ	Max(2)		Unit
				T_A = 25 °C	T_A = 85 °C	T_A = 105 °C	
I_{DD}	Supply current in Run mode	External clock(3), all peripherals enabled(4)	120 MHz	49	63	72	mA
			90 MHz	38	51	61	
			60 MHz	26	39	49	
			30 MHz	14	27	37	
			25 MHz	11	24	34	
			16 MHz(5)	8	21	30	
			8 MHz	5	17	27	
			4 MHz	3	16	26	
			2 MHz	2	15	25	
		External clock(3), all peripherals disabled	120 MHz	21	34	44	
			90 MHz	17	30	40	
			60 MHz	12	25	35	
			30 MHz	7	20	30	
			25 MHz	5	18	28	
			16 MHz(5)	4.0	17.0	27.0	
			8 MHz	2.5	15.5	25.5	
			4 MHz	2.0	14.7	24.8	
			2 MHz	1.6	14.5	24.6	

1. Code and data processing running from SRAM1 using boot pins.
2. Guaranteed by characterization, tested in production at V_{DD} max and f_{HCLK} max with peripherals enabled.
3. External clock is 4 MHz and PLL is on when f_{HCLK} > 25 MHz.
4. When the ADC is on (ADON bit set in the ADC_CR2 register), add an additional power consumption of 1.6 mA per ADC for the analog part.
5. In this case HCLK = system clock/2.

Table 21. Typical and maximum current consumption in Run mode, code with data processing running from Flash memory (ART accelerator disabled)

Symbol	Parameter	Conditions	f_{HCLK}	Typ	Max(1)		Unit
				T_A = 25 °C	T_A = 85 °C	T_A = 105 °C	
I_{DD}	Supply current in Run mode	External clock(2), all peripherals enabled(3)	120 MHz	61	81	93	mA
			90 MHz	48	68	80	
			60 MHz	33	53	65	
			30 MHz	18	38	50	
			25 MHz	14	34	46	
			16 MHz(4)	10	30	42	
			8 MHz	6	26	38	
			4 MHz	4	24	36	
			2 MHz	3	23	35	
		External clock(2), all peripherals disabled	120 MHz	33	54	66	
			90 MHz	27	47	59	
			60 MHz	19	39	51	
			30 MHz	11	31	43	
			25 MHz	8	28	41	
			16 MHz(4)	6	26	38	
			8 MHz	4	24	36	
			4 MHz	3	23	35	
			2 MHz	2	23	34	

1. Guaranteed by characterization results, tested in production at V_{DD} max and f_{HCLK} max with peripherals enabled.
2. External clock is 4 MHz and PLL is on when f_{HCLK} > 25 MHz.
3. When the ADC is on (ADON bit set in the ADC_CR2 register), add an additional power consumption of 1.6 mA per ADC for the analog part.
4. In this case HCLK = system clock/2.

Figure 23. Typical current consumption vs. temperature, Run mode, code with data processing running from RAM, and peripherals ON

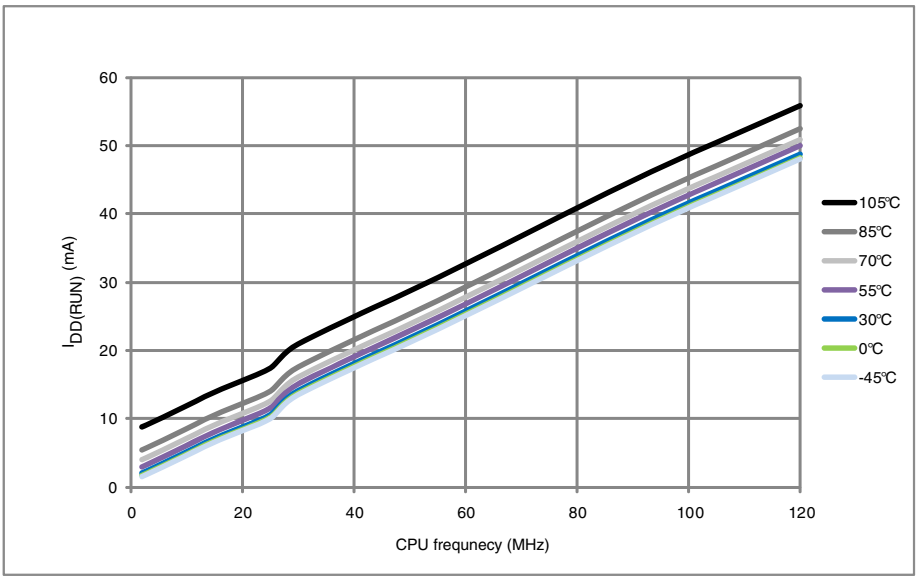

Figure 24. Typical current consumption vs. temperature, Run mode, code with data processing running from RAM, and peripherals OFF

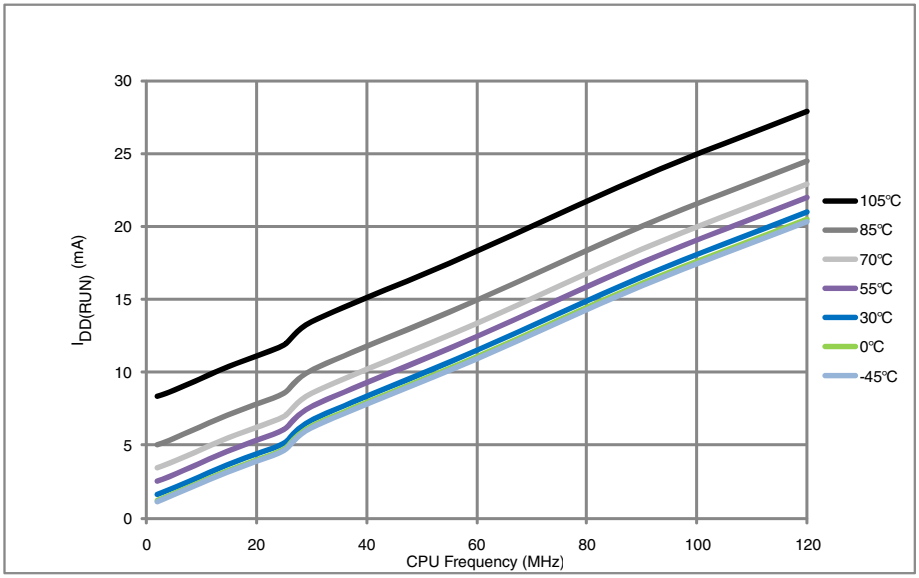

Figure 25. Typical current consumption vs. temperature, Run mode, code with data processing running from Flash, ART accelerator OFF, peripherals ON

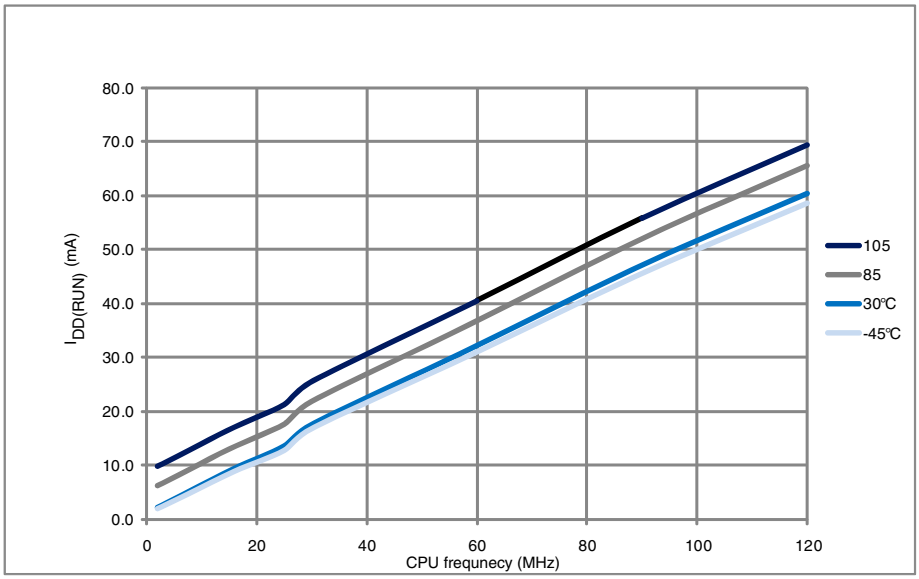

MS19016V1

Figure 26. Typical current consumption vs. temperature, Run mode, code with data processing running from Flash, ART accelerator OFF, peripherals OFF

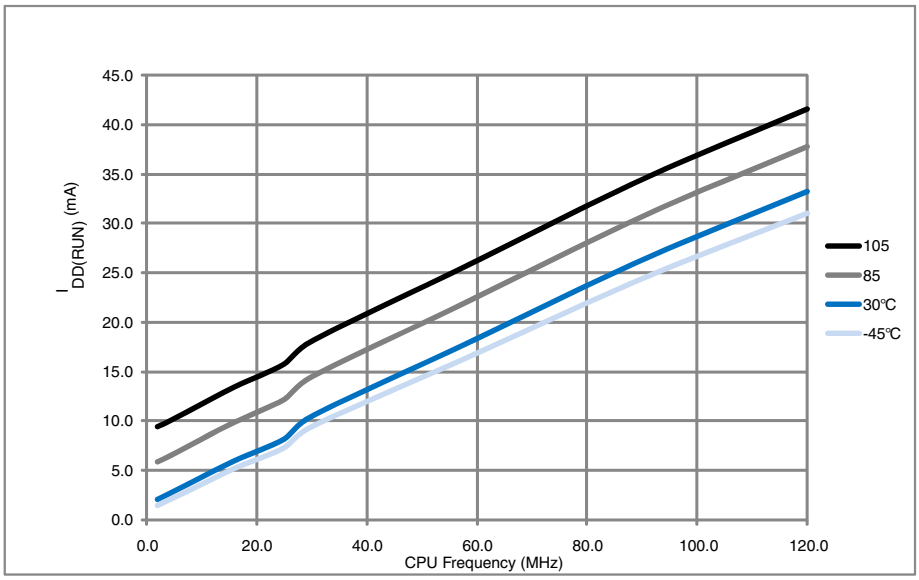

MS19017V1

Table 22. Typical and maximum current consumption in Sleep mode

Symbol	Parameter	Conditions	f_{HCLK}	Typ	Max(1)		Unit
				T_A = 25 °C	T_A = 85 °C	T_A = 105 °C	
I_{DD}	Supply current in Sleep mode	External clock(2), all peripherals enabled(3)	120 MHz	38	51	61	mA
			90 MHz	30	43	53	
			60 MHz	20	33	43	
			30 MHz	11	25	35	
			25 MHz	8	21	31	
			16 MHz	6	19	29	
			8 MHz	3.6	17.0	27.0	
			4 MHz	2.4	15.4	25.3	
			2 MHz	1.9	14.9	24.7	
		External clock(2), all peripherals disabled	120 MHz	8	21	31	
			90 MHz	7	20	30	
			60 MHz	5	18	28	
			30 MHz	3.5	16.0	26.0	
			25 MHz	2.5	16.0	25.0	
			16 MHz	2.1	15.1	25.0	
			8 MHz	1.7	15.0	25.0	
			4 MHz	1.5	14.6	24.6	
			2 MHz	1.4	14.2	24.3	

1. Guaranteed by characterization results, tested in production at V_{DD} max and f_{HCLK} max with peripherals enabled.
2. External clock is 4 MHz and PLL is on when f_{HCLK} > 25 MHz.
3. Add an additional power consumption of 1.6 mA per ADC for the analog part. In applications, this consumption occurs only while the ADC is on (ADON bit is set in the ADC_CR2 register).

Figure 27. Typical current consumption vs. temperature in Sleep mode, peripherals ON

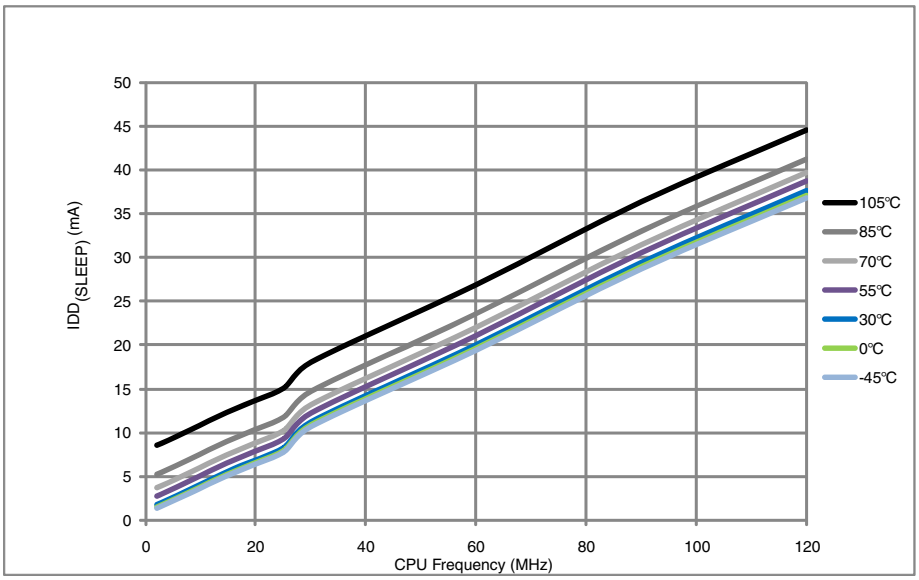

Figure 28. Typical current consumption vs. temperature in Sleep mode, peripherals OFF

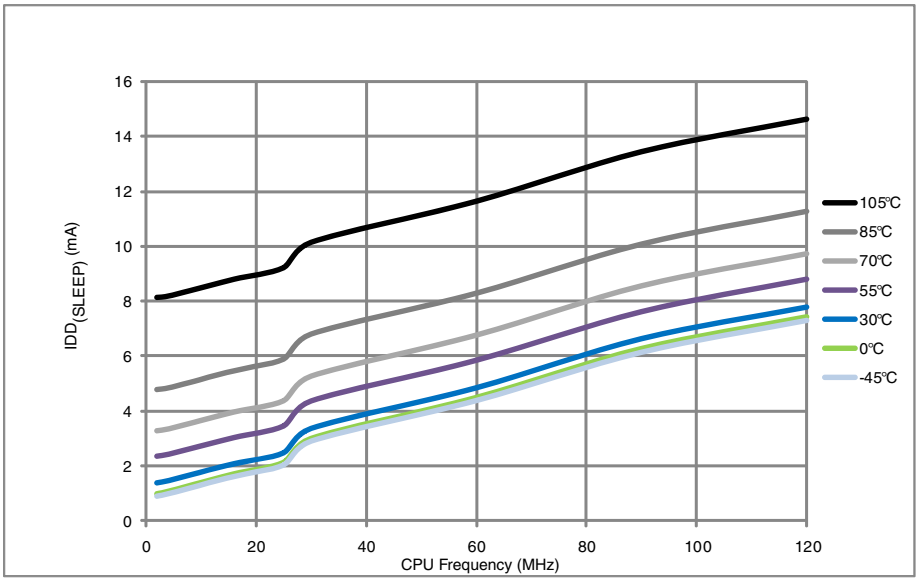

Table 23. Typical and maximum current consumptions in Stop mode

Symbol	Parameter	Conditions	Typ	Max			Unit
			T_A = 25 °C	T_A = 25 °C	T_A = 85 °C	T_A = 105 °C	
I_{DD_STOP}	Supply current in Stop mode with main regulator in Run mode	Flash in Stop mode, low-speed and high-speed internal RC oscillators and high-speed oscillator OFF (no independent watchdog)	0.55	1.2	11.00	20.00	mA
		Flash in Deep power down mode, low-speed and high-speed internal RC oscillators and high-speed oscillator OFF (no independent watchdog)	0.50	1.2	11.00	20.00	
	Supply current in Stop mode with main regulator in Low-power mode	Flash in Stop mode, low-speed and high-speed internal RC oscillators and high-speed oscillator OFF (no independent watchdog)	0.35	1.1	8.00	15.00	
		Flash in Deep power down mode, low-speed and high-speed internal RC oscillators and high-speed oscillator OFF (no independent watchdog)	0.30	1.1	8.00	15.00	

Figure 29. Typical current consumption vs. temperature in Stop mode

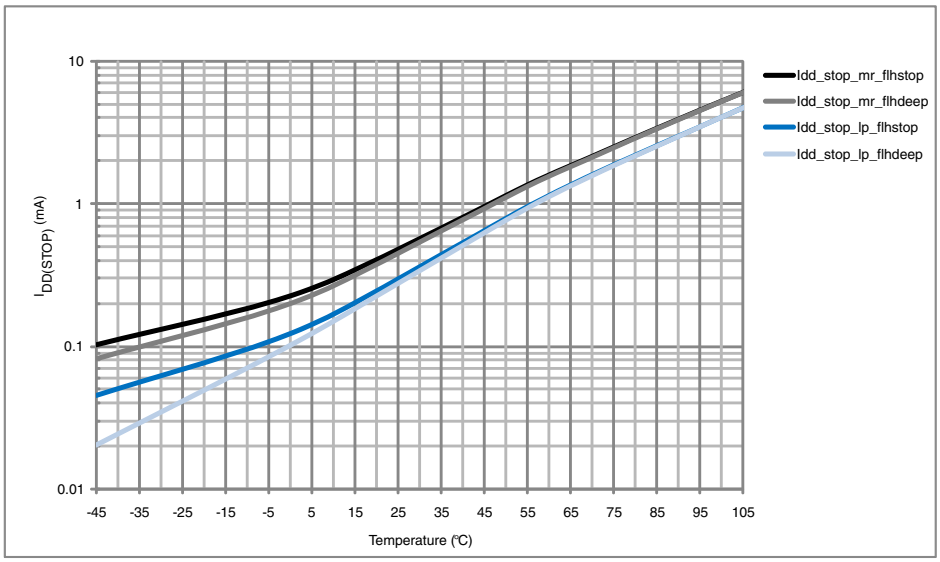

1. All typical and maximum values from table 18 and figure 26 will be reduced over time by up to 50% as part of ST continuous improvement of test procedures. New versions of the datasheet will be released to reflect these changes

Table 24. Typical and maximum current consumptions in Standby mode

Symbol	Parameter	Conditions	Typ			Max(1)		Unit
			T_A = 25 °C			T_A = 85 °C	T_A = 105 °C	
			V_{DD} = 1.8 V	V_{DD}= 2.4 V	V_{DD} = 3.3 V	V_{DD} = 3.6 V		
I_{DD_STBY}	Supply current in Standby mode	Backup SRAM ON, low-speed oscillator and RTC ON	3.0	3.4	4.0	15.1	25.8	µA
		Backup SRAM OFF, low-speed oscillator and RTC ON	2.4	2.7	3.3	12.4	20.5	
		Backup SRAM ON, RTC OFF	2.4	2.6	3.0	12.5	24.8	
		Backup SRAM OFF, RTC OFF	1.7	1.9	2.2	9.8	19.2	

1. Guaranteed by characterization results, not tested in production.

Table 25. Typical and maximum current consumptions in V_{BAT} mode

Symbol	Parameter	Conditions	Typ			Max(1)		Unit
			T_A = 25 °C			T_A = 85 °C	T_A = 105 °C	
			V_{DD} = 1.8 V	V_{DD}= 2.4 V	V_{DD} = 3.3 V	V_{DD} = 3.6 V		
I_{DD_VBAT}	Backup domain supply current	Backup SRAM ON, low-speed oscillator and RTC ON	1.29	1.42	1.68	12	19	µA
		Backup SRAM OFF, low-speed oscillator and RTC ON	0.62	0.73	0.96	8	10	
		Backup SRAM ON, RTC OFF	0.79	0.81	0.86	9	16	
		Backup SRAM OFF, RTC OFF	0.10	0.10	0.10	5	7	

1. Guaranteed by characterization results, not tested in production.

On-chip peripheral current consumption

The current consumption of the on-chip peripherals is given in *Table 26*. The MCU is placed under the following conditions:

- At startup, all I/O pins are configured as analog inputs by firmware.
- All peripherals are disabled unless otherwise mentioned
- The given value is calculated by measuring the current consumption
  - with all peripherals clocked off
  - with one peripheral clocked on (with only the clock applied)
- The code is running from Flash memory and the Flash memory access time is equal to 3 wait states at 120 MHz
- Prefetch and Cache ON
- When the peripherals are enabled, HCLK = 120MHz, $f_{PCLK1} = f_{HCLK}/4$, and $f_{PCLK2} = f_{HCLK}/2$
- The typical values are obtained for V_{DD} = 3.3 V and T_A= 25 °C, unless otherwise specified.

Table 26. Peripheral current consumption

Peripheral[1]		Typical consumption at 25 °C	Unit
AHB1	GPIO A	0.45	mA
	GPIO B	0.43	
	GPIO C	0.46	
	GPIO D	0.44	
	GPIO E	0.44	
	GPIO F	0.42	
	GPIO G	0.44	
	GPIO H	0.42	
	GPIO I	0.43	
	OTG_HS + ULPI	3.64	
	CRC	1.17	
	BKPSRAM	0.21	
	DMA1	2.76	
	DMA2	2.85	
	ETH_MAC + ETH_MAC_TX ETH_MAC_RX ETH_MAC_PTP	2.99	
AHB2	OTG_FS	3.16	
	DCMI	0.60	
AHB3	FSMC	1.74	

Table 26. Peripheral current consumption (continued)

Peripheral[1]		Typical consumption at 25 °C	Unit
APB1	TIM2	0.61	mA
	TIM3	0.49	
	TIM4	0.54	
	TIM5	0.62	
	TIM6	0.20	
	TIM7	0.20	
	TIM12	0.36	
	TIM13	0.28	
	TIM14	0.25	
	USART2	0.25	
	USART3	0.25	
	UART4	0.25	
	UART5	0.26	
	I2C1	0.25	
	I2C2	0.25	
	I2C3	0.25	
	SPI2	0.20/0.10	
	SPI3	0.18/0.09	
	CAN1	0.31	
	CAN2	0.30	
	DAC channel 1[2]	1.11	
	DAC channel 1[3]	1.11	
	PWR	0.15	
	WWDG	0.15	

Table 26. Peripheral current consumption (continued)

Peripheral[1]		Typical consumption at 25 °C	Unit
APB2	SDIO	0.69	mA
	TIM1	1.06	
	TIM8	1.03	
	TIM9	0.58	
	TIM10	0.37	
	TIM11	0.39	
	ADC1[4]	2.13	
	ADC2[4]	2.04	
	ADC3[4]	2.12	
	SPI1	1.20	
	USART1	0.38	
	USART6	0.37	

1. External clock is 25 MHz (HSE oscillator with 25 MHz crystal) and PLL is on.
2. EN1 bit is set in DAC_CR register.
3. EN2 bit is set in DAC_CR register.
4. $f_{ADC} = f_{PCLK2}/2$, ADON bit set in ADC_CR2 register.

6.3.7 Wakeup time from low-power mode

The wakeup times given in *Table 27* is measured on a wakeup phase with a 16 MHz HSI RC oscillator. The clock source used to wake up the device depends from the current operating mode:

- Stop or Standby mode: the clock source is the RC oscillator
- Sleep mode: the clock source is the clock that was set before entering Sleep mode.

All timings are derived from tests performed under ambient temperature and V_{DD} supply voltage conditions summarized in *Table 14*.

Table 27. Low-power mode wakeup timings

Symbol	Parameter	Min[1]	Typ[1]	Max[1]	Unit
$t_{WUSLEEP}$[2]	Wakeup from Sleep mode	-	1	-	µs
t_{WUSTOP}[2]	Wakeup from Stop mode (regulator in Run mode)	-	13	-	µs
	Wakeup from Stop mode (regulator in low-power mode)	-	17	40	
	Wakeup from Stop mode (regulator in low-power mode and Flash memory in Deep power down mode)	-	110	-	
$t_{WUSTDBY}$[2][3]	Wakeup from Standby mode	260	375	480	µs

1. Guaranteed by characterization results, not tested in production.
2. The wakeup times are measured from the wakeup event to the point in which the application code reads the first instruction.
3. $t_{WUSTDBY}$ minimum and maximum values are given at 105 °C and –45 °C, respectively.

6.3.8 External clock source characteristics

High-speed external user clock generated from an external source

The characteristics given in *Table 28* result from tests performed using an high-speed external clock source, and under ambient temperature and supply voltage conditions summarized in *Table 14*.

Table 28. High-speed external user clock characteristics

Symbol	Parameter	Conditions	Min	Typ	Max	Unit
f_{HSE_ext}	External user clock source frequency(1)	-	1	-	26	MHz
V_{HSEH}	OSC_IN input pin high level voltage		$0.7V_{DD}$	-	V_{DD}	V
V_{HSEL}	OSC_IN input pin low level voltage		V_{SS}	-	$0.3V_{DD}$	
$t_{w(HSE)}$ $t_{w(HSE)}$	OSC_IN high or low time(1)		5	-	-	ns
$t_{r(HSE)}$ $t_{f(HSE)}$	OSC_IN rise or fall time(1)		-	-	20	
$C_{in(HSE)}$	OSC_IN input capacitance(1)	-	-	5	-	pF
$DuCy_{(HSE)}$	Duty cycle	-	45	-	55	%
I_L	OSC_IN Input leakage current	$V_{SS} \leq V_{IN} \leq V_{DD}$	-	-	±1	µA

1. Guaranteed by design, not tested in production.

Low-speed external user clock generated from an external source

The characteristics given in *Table 29* result from tests performed using an low-speed external clock source, and under ambient temperature and supply voltage conditions summarized in *Table 14*.

Table 29. Low-speed external user clock characteristics

Symbol	Parameter	Conditions	Min	Typ	Max	Unit
f_{LSE_ext}	User External clock source frequency(1)	-	-	32.768	1000	kHz
V_{LSEH}	OSC32_IN input pin high level voltage		$0.7V_{DD}$	-	V_{DD}	V
V_{LSEL}	OSC32_IN input pin low level voltage		V_{SS}	-	$0.3V_{DD}$	
$t_{w(LSE)}$ $t_{f(LSE)}$	OSC32_IN high or low time(1)		450	-	-	ns
$t_{r(LSE)}$ $t_{f(LSE)}$	OSC32_IN rise or fall time(1)		-	-	50	
$C_{in(LSE)}$	OSC32_IN input capacitance(1)	-	-	5	-	pF
$DuCy_{(LSE)}$	Duty cycle	-	30	-	70	%
I_L	OSC32_IN Input leakage current	$V_{SS} \leq V_{IN} \leq V_{DD}$	-	-	±1	µA

1. Guaranteed by design, not tested in production.

Figure 30. High-speed external clock source AC timing diagram

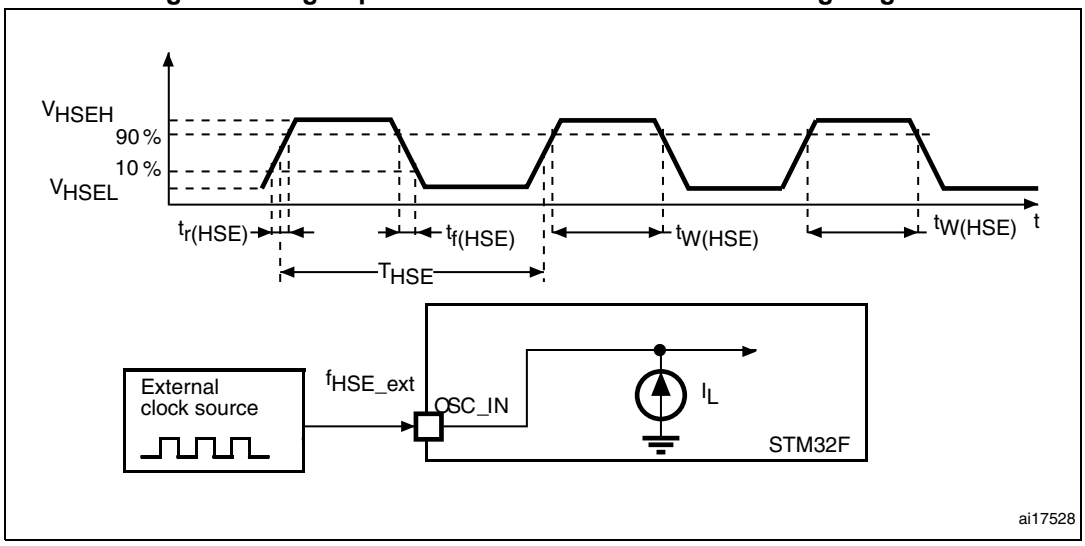

Figure 31. Low-speed external clock source AC timing diagram

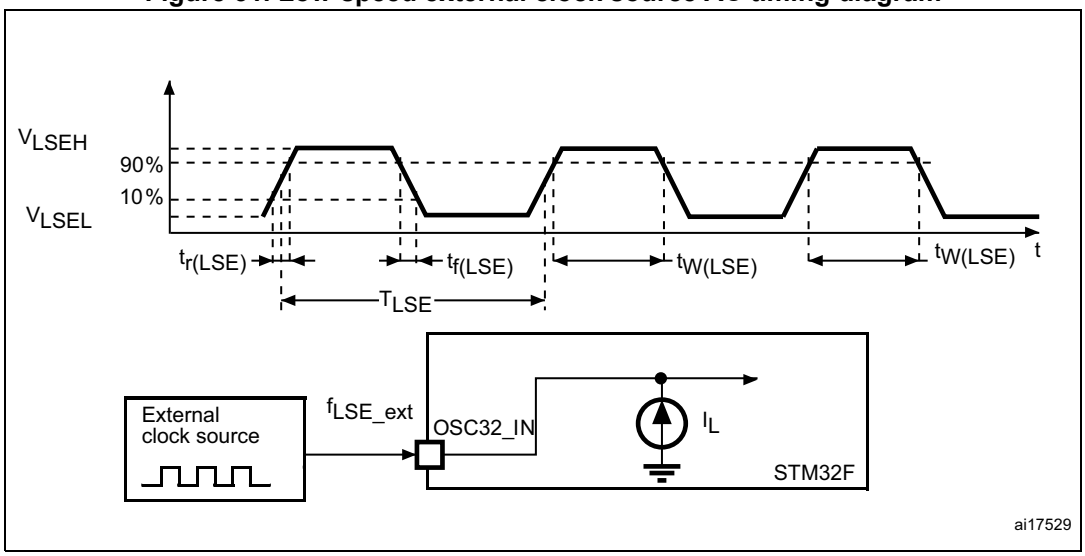

High-speed external clock generated from a crystal/ceramic resonator

The high-speed external (HSE) clock can be supplied with a 4 to 26 MHz crystal/ceramic resonator oscillator. All the information given in this paragraph are based on characterization results obtained with typical external components specified in *Table 30*. In the application, the resonator and the load capacitors have to be placed as close as possible to the oscillator pins in order to minimize output distortion and startup stabilization time. Refer to the crystal resonator manufacturer for more details on the resonator characteristics (frequency, package, accuracy).

Table 30. HSE 4-26 MHz oscillator characteristics(1) (2)

Symbol	Parameter	Conditions	Min	Typ	Max	Unit
f_{OSC_IN}	Oscillator frequency	-	4	-	26	MHz
R_F	Feedback resistor	-	-	200	-	kΩ
I_{DD}	HSE current consumption	V_{DD}=3.3 V, ESR= 30 Ω, C_L=5 pF@25 MHz	-	449	-	µA
		V_{DD}=3.3 V, ESR= 30 Ω, C_L=10 pF@25 MHz	-	532	-	
g_m	Oscillator transconductance	Startup	5	-	-	mA/V
$t_{SU(HSE}$(3)	Startup time	V_{DD} is stabilized	-	2	-	ms

1. Resonator characteristics given by the crystal/ceramic resonator manufacturer.
2. Guaranteed by characterization results, not tested in production.
3. $t_{SU(HSE)}$ is the startup time measured from the moment it is enabled (by software) to a stabilized 8 MHz oscillation is reached. This value is measured for a standard crystal resonator and it can vary significantly with the crystal manufacturer

For C_{L1} and C_{L2}, it is recommended to use high-quality external ceramic capacitors in the 5 pF to 25 pF range (typ.), designed for high-frequency applications, and selected to match the requirements of the crystal or resonator (see *Figure 32*). C_{L1} and C_{L2} are usually the same size. The crystal manufacturer typically specifies a load capacitance which is the series combination of C_{L1} and C_{L2}. PCB and MCU pin capacitance must be included (10 pF can be used as a rough estimate of the combined pin and board capacitance) when sizing C_{L1} and C_{L2}.

Note: For information on electing the crystal, refer to the application note AN2867 "Oscillator design guide for ST microcontrollers" available from the ST website www.st.com.

Figure 32. Typical application with an 8 MHz crystal

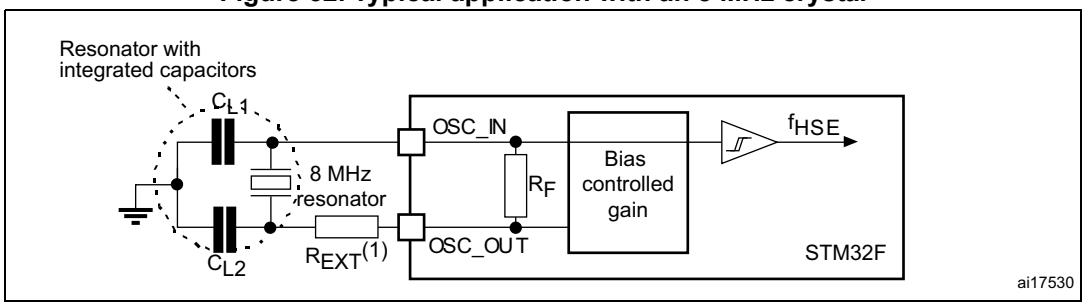

1. R_{EXT} value depends on the crystal characteristics.

Low-speed external clock generated from a crystal/ceramic resonator

The low-speed external (LSE) clock can be supplied with a 32.768 kHz crystal/ceramic resonator oscillator. All the information given in this paragraph are based on characterization results obtained with typical external components specified in *Table 31*. In the application, the resonator and the load capacitors have to be placed as close as possible to the oscillator pins in order to minimize output distortion and startup stabilization time. Refer to the crystal resonator manufacturer for more details on the resonator characteristics (frequency, package, accuracy).

Table 31. LSE oscillator characteristics (f_{LSE} = 32.768 kHz) (1)

Symbol	Parameter	Conditions	Min	Typ	Max	Unit
R_F	Feedback resistor	-	-	18.4	-	MΩ
I_{DD}	LSE current consumption	-	-	-	1	µA
g_m	Oscillator Transconductance	-	2.8	-	-	µA/V
$t_{SU(LSE)}$(2)	startup time	V_{DD} is stabilized	-	2	-	s

1. Guaranteed by design, not tested in production.
2. $t_{SU(LSE)}$ is the startup time measured from the moment it is enabled (by software) to a stabilized 32.768 kHz oscillation is reached. This value is measured for a standard crystal resonator and it can vary significantly with the crystal manufacturer

Note: For information on electing the crystal, refer to the application note AN2867 "Oscillator design guide for ST microcontrollers" available from the ST website www.st.com.

Figure 33. Typical application with a 32.768 kHz crystal

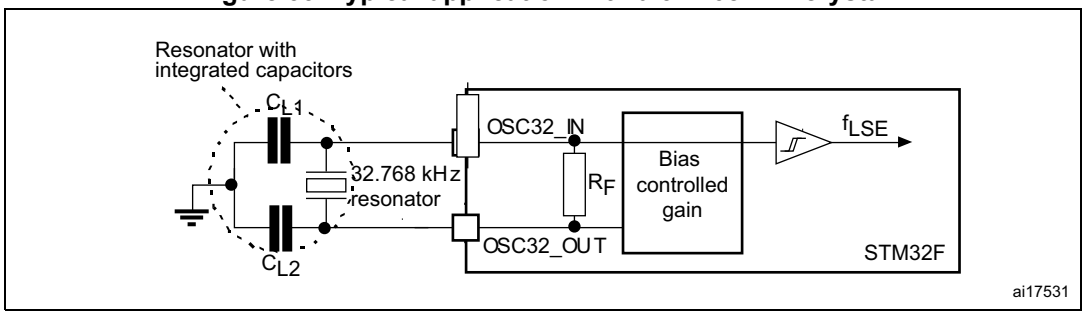

6.3.9 Internal clock source characteristics

The parameters given in *Table 32* and *Table 33* are derived from tests performed under ambient temperature and V_{DD} supply voltage conditions summarized in *Table 14*.

High-speed internal (HSI) RC oscillator

Table 32. HSI oscillator characteristics (1)

Symbol	Parameter	Conditions	Min	Typ	Max	Unit
f_{HSI}	Frequency	-	-	16	-	MHz
ACC_{HSI}	HSI user-trimming step(2)	-	-	-	1	%
	Accuracy of the HSI oscillator	T_A = –40 to 105 °C(3)	– 8	-	4.5	%
		T_A = –10 to 85 °C(3)	– 4	-	4	%
		T_A = 25 °C(4)	– 1	-	1	%
$t_{su(HSI)}$(2)	HSI oscillator startup time	-	-	2.2	4.0	µs
$I_{DD(HSI)}$(2)	HSI oscillator power consumption	-	-	60	80	µA

1. V_{DD} = 3.3 V, T_A = –40 to 105 °C unless otherwise specified.
2. Guaranteed by design, not tested in production.
3. Guaranteed by characterization results.
4. Factory calibrated, parts not soldered.

Figure 34. ACC_{HSI} versus temperature

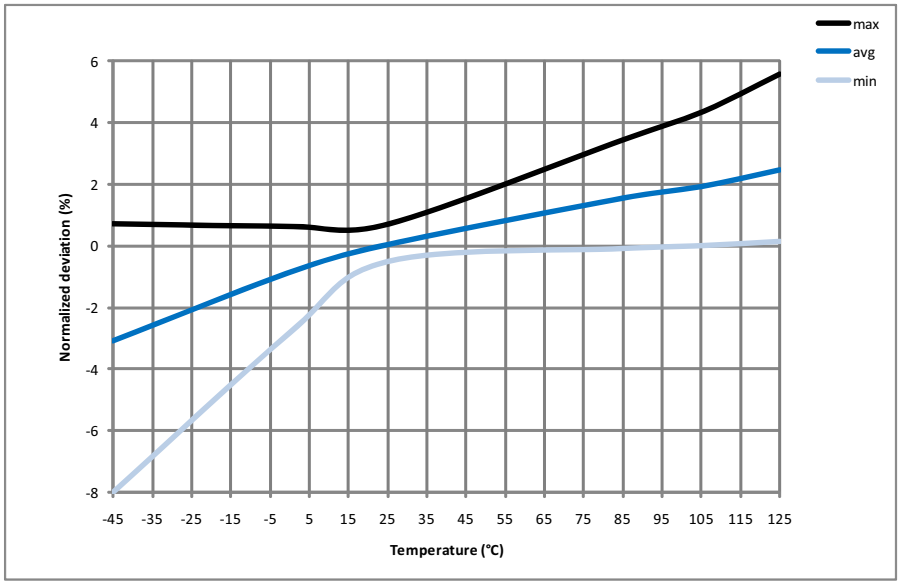

MS19012V2

Low-speed internal (LSI) RC oscillator

Table 33. LSI oscillator characteristics (1)

Symbol	Parameter	Min	Typ	Max	Unit
f_{LSI} (2)	Frequency	17	32	47	kHz
$t_{su(LSI)}$ (3)	LSI oscillator startup time	-	15	40	µs
$I_{DD(LSI)}$ (3)	LSI oscillator power consumption	-	0.4	0.6	µA

1. V_{DD} = 3 V, T_A = –40 to 105 °C unless otherwise specified.
2. Guaranteed by characterization results, not tested in production.
3. Guaranteed by design, not tested in production.

Figure 35. ACC_{LSI} versus temperature

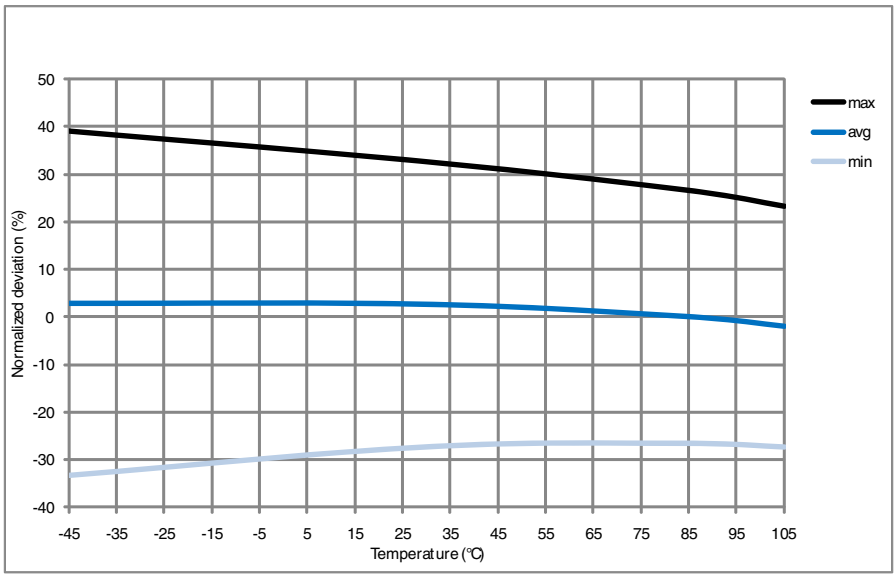

MS19013V1

6.3.10 PLL characteristics

The parameters given in *Table 34* and *Table 35* are derived from tests performed under temperature and V_{DD} supply voltage conditions summarized in *Table 14*.

Table 34. Main PLL characteristics

Symbol	Parameter	Conditions	Min	Typ	Max	Unit
f_{PLL_IN}	PLL input clock(1)	-	0.95(2)	1	2.10(2)	MHz
f_{PLL_OUT}	PLL multiplier output clock	-	24	-	120	MHz
f_{PLL48_OUT}	48 MHz PLL multiplier output clock	-	-	-	48	MHz
f_{VCO_OUT}	PLL VCO output	-	192	-	432	MHz
t_{LOCK}	PLL lock time	VCO freq = 192 MHz	75	-	200	µs
		VCO freq = 432 MHz	100	-	300	

Table 34. Main PLL characteristics (continued)

Symbol	Parameter	Conditions		Min	Typ	Max	Unit
Jitter(3)	Cycle-to-cycle jitter	System clock 120 MHz	RMS	-	25	-	ps
			peak to peak	-	±150	-	
	Period Jitter		RMS	-	15	-	
			peak to peak	-	±200	-	
	Main clock output (MCO) for RMII Ethernet	Cycle to cycle at 50 MHz on 1000 samples		-	32	-	
	Main clock output (MCO) for MII Ethernet	Cycle to cycle at 25 MHz on 1000 samples		-	40	-	
	Bit Time CAN jitter	Cycle to cycle at 1 MHz on 1000 samples		-	330	-	
$I_{DD(PLL)}$(4)	PLL power consumption on VDD	VCO freq = 192 MHz VCO freq = 432 MHz		0.15 0.45	-	0.40 0.75	mA
$I_{DDA(PLL)}$(4)	PLL power consumption on VDDA	VCO freq = 192 MHz VCO freq = 432 MHz		0.30 0.55	-	0.40 0.85	mA

1. Take care of using the appropriate division factor M to obtain the specified PLL input clock values. The M factor is shared between PLL and PLLI2S.
2. Guaranteed by design, not tested in production.
3. The use of 2 PLLs in parallel could degraded the Jitter up to +30%.
4. Guaranteed by characterization results, not tested in production.

Table 35. PLLI2S (audio PLL) characteristics

Symbol	Parameter	Conditions	Min	Typ	Max	Unit
f_{PLLI2S_IN}	PLLI2S input clock(1)	-	0.95(2)	1	2.10(2)	MHz
f_{PLLI2S_OUT}	PLLI2S multiplier output clock	-	-	-	216	MHz
f_{VCO_OUT}	PLLI2S VCO output	-	192	-	432	MHz
t_{LOCK}	PLLI2S lock time	VCO freq = 192 MHz	75	-	200	µs
		VCO freq = 432 MHz	100	-	300	

Table 35. PLLI2S (audio PLL) characteristics (continued)

Symbol	Parameter	Conditions		Min	Typ	Max	Unit
Jitter(3)	Master I2S clock jitter	Cycle to cycle at 12.288 MHz on 48KHz period, N=432, R=5	RMS	-	90	-	ps
			peak to peak	-	±280	-	
		Average frequency of 12.288 MHz N=432, R=5 on 1000 samples		-	90	-	ps
	WS I2S clock jitter	Cycle to cycle at 48 KHz on 1000 samples		-	400	-	ps
$I_{DD(PLLI2S)}$(4)	PLLI2S power consumption on V_{DD}	VCO freq = 192 MHz VCO freq = 432 MHz		0.15 0.45	-	0.40 0.75	mA
$I_{DDA(PLLI2S)}$(4)	PLLI2S power consumption on V_{DDA}	VCO freq = 192 MHz VCO freq = 432 MHz		0.30 0.55	-	0.40 0.85	mA

1. Take care of using the appropriate division factor M to have the specified PLL input clock values.
2. Guaranteed by design, not tested in production.
3. Value given with main PLL running.
4. Guaranteed by characterization results, not tested in production.

6.3.11 PLL spread spectrum clock generation (SSCG) characteristics

The spread spectrum clock generation (SSCG) feature allows to reduce electromagnetic interferences (see *Table 42: EMI characteristics*). It is available only on the main PLL.

Table 36. SSCG parameters constraint

Symbol	Parameter	Min	Typ	Max(1)	Unit
f_{Mod}	Modulation frequency	-	-	10	KHz
md	Peak modulation depth	0.25	-	2	%
MODEPER * INCSTEP	-	-	-	$2^{15}-1$	-

1. Guaranteed by design, not tested in production.

Equation 1

The frequency modulation period (MODEPER) is given by the equation below:

$$MODEPER = round[f_{PLL_IN} / (4 \times f_{Mod})]$$

f_{PLL_IN} and f_{Mod} must be expressed in Hz.

As an example:

If f_{PLL_IN} = 1 MHz and f_{MOD} = 1 kHz, the modulation depth (MODEPER) is given by equation 1:

$$MODEPER = round[10^6 / (4 \times 10^3)] = 250$$

Equation 2

Equation 2 allows to calculate the increment step (INCSTEP):

$$INCSTEP = round[((2^{15} - 1) \times md \times PLLN) / (100 \times 5 \times MODEPER)]$$

f_{VCO_OUT} must be expressed in MHz.

With a modulation depth (md) = ±2 % (4 % peak to peak), and PLLN = 240 (in MHz):

$$INCSTEP = round[((2^{15} - 1) \times 2 \times 240) / (100 \times 5 \times 250)] = 126 md(quantitazed)\%$$

An amplitude quantization error may be generated because the linear modulation profile is obtained by taking the quantized values (rounded to the nearest integer) of MODPER and INCSTEP. As a result, the achieved modulation depth is quantized. The percentage quantized modulation depth is given by the following formula:

$$md_{quantized}\% = (MODEPER \times INCSTEP \times 100 \times 5) / ((2^{15} - 1) \times PLLN)$$

As a result:

$$md_{quantized}\% = (250 \times 126 \times 100 \times 5) / ((2^{15} - 1) \times 240) = 2.0002\%(peak)$$

Figure 36 and *Figure 37* show the main PLL output clock waveforms in center spread and down spread modes, where:

F0 is f_{PLL_OUT} nominal.

T_{mode} is the modulation period.

md is the modulation depth.

Figure 36. PLL output clock waveforms in center spread mode

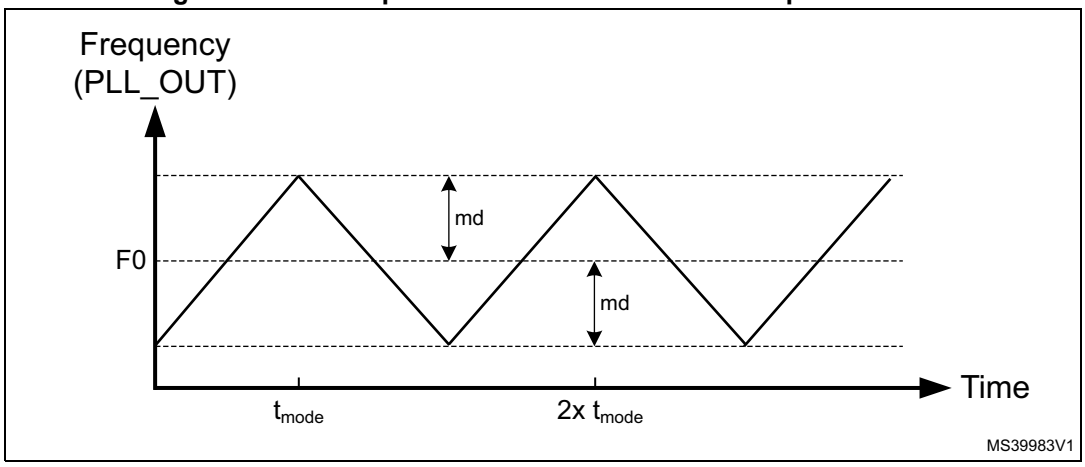

Figure 37. PLL output clock waveforms in down spread mode

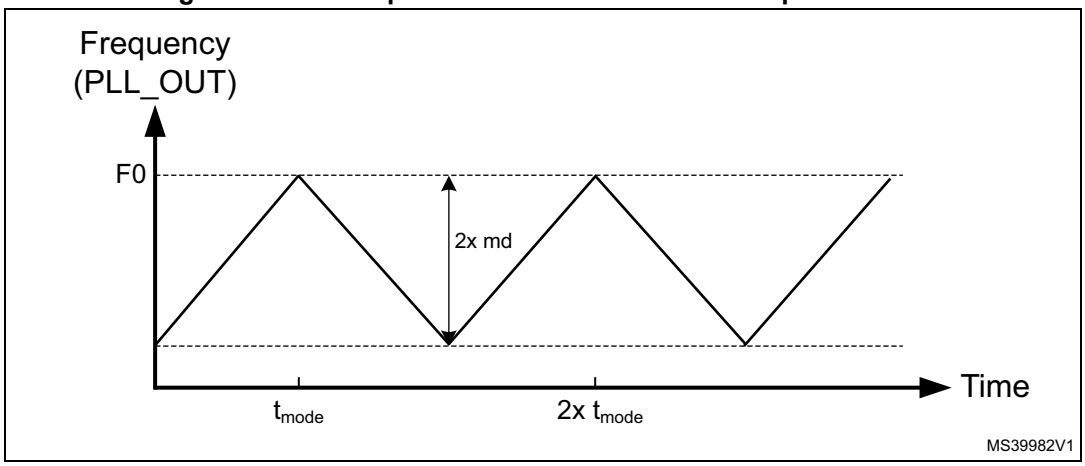

6.3.12 Memory characteristics

Flash memory

The characteristics are given at T_A = –40 to 105 °C unless otherwise specified.

Table 37. Flash memory characteristics

Symbol	Parameter	Conditions	Min	Typ	Max	Unit
I_{DD}	Supply current	Write / Erase 8-bit mode V_{DD} = 1.8 V	-	5	-	mA
		Write / Erase 16-bit mode V_{DD} = 2.1 V	-	8	-	
		Write / Erase 32-bit mode V_{DD} = 3.3 V	-	12	-	

Table 38. Flash memory programming

Symbol	Parameter	Conditions	Min(1)	Typ	Max(1)	Unit
t_{prog}	Word programming time	Program/erase parallelism (PSIZE) = x 8/16/32	-	16	100(2)	µs
$t_{ERASE16KB}$	Sector (16 KB) erase time	Program/erase parallelism (PSIZE) = x 8	-	400	800	ms
		Program/erase parallelism (PSIZE) = x 16	-	300	600	
		Program/erase parallelism (PSIZE) = x 32	-	250	500	
$t_{ERASE64KB}$	Sector (64 KB) erase time	Program/erase parallelism (PSIZE) = x 8	-	1200	2400	ms
		Program/erase parallelism (PSIZE) = x 16	-	700	1400	
		Program/erase parallelism (PSIZE) = x 32	-	550	1100	
$t_{ERASE128KB}$	Sector (128 KB) erase time	Program/erase parallelism (PSIZE) = x 8	-	2	4	s
		Program/erase parallelism (PSIZE) = x 16	-	1.3	2.6	
		Program/erase parallelism (PSIZE) = x 32	-	1	2	
t_{ME}	Mass erase time	Program/erase parallelism (PSIZE) = x 8	-	16	32	s
		Program/erase parallelism (PSIZE) = x 16	-	11	22	
		Program/erase parallelism (PSIZE) = x 32	-	8	16	
V_{prog}	Programming voltage	32-bit program operation	2.7	-	3.6	V
		16-bit program operation	2.1	-	3.6	V
		8-bit program operation	1.8	-	3.6	V

1. Guaranteed by characterization results, not tested in production.
2. The maximum programming time is measured after 100K erase operations.

Table 39. Flash memory programming with V_{PP}

Symbol	Parameter	Conditions	Min(1)	Typ	Max(1)	Unit
t_{prog}	Double word programming	T_A = 0 to +40 °C V_{DD} = 3.3 V V_{PP} = 8.5 V	-	16	100(2)	µs
$t_{ERASE16KB}$	Sector (16 KB) erase time		-	230	-	ms
$t_{ERASE64KB}$	Sector (64 KB) erase time		-	490	-	
$t_{ERASE128KB}$	Sector (128 KB) erase time		-	875	-	
t_{ME}	Mass erase time		-	6.9	-	s
V_{prog}	Programming voltage	-	2.7	-	3.6	V
V_{PP}	V_{PP} voltage range	-	7	-	9	V
I_{PP}	Minimum current sunk on the V_{PP} pin	-	10	-	-	mA
t_{VPP}(3)	Cumulative time during which V_{PP} is applied	-	-	-	1	hour

1. Guaranteed by design, not tested in production.
2. The maximum programming time is measured after 100K erase operations.
3. V_{PP} should only be connected during programming/erasing.

Table 40. Flash memory endurance and data retention

Symbol	Parameter	Conditions	Value	Unit
			Min(1)	
N_{END}	Endurance	T_A = –40 to +85 °C (6 suffix versions) T_A = –40 to +105 °C (7 suffix versions)	10	kcycles
t_{RET}	Data retention	1 kcycle(2) at T_A = 85 °C	30	Years
		1 kcycle(2) at T_A = 105 °C	10	
		10 kcycles(2) at T_A = 55 °C	20	

1. Guaranteed by characterization results, not tested in production.
2. Cycling performed over the whole temperature range.

6.3.13 EMC characteristics

Susceptibility tests are performed on a sample basis during device characterization.

Functional EMS (electromagnetic susceptibility)

While a simple application is executed on the device (toggling 2 LEDs through I/O ports). the device is stressed by two electromagnetic events until a failure occurs. The failure is indicated by the LEDs:

- **Electrostatic discharge (ESD)** (positive and negative) is applied to all device pins until a functional disturbance occurs. This test is compliant with the IEC 61000-4-2 standard.
- **FTB**: A burst of fast transient voltage (positive and negative) is applied to V_{DD} and V_{SS} through a 100 pF capacitor, until a functional disturbance occurs. This test is compliant with the IEC 61000-4-4 standard.

A device reset allows normal operations to be resumed.

The test results are given in *Table 41*. They are based on the EMS levels and classes defined in application note AN1709.

Table 41. EMS characteristics

Symbol	Parameter	Conditions	Level/ Class
V_{FESD}	Voltage limits to be applied on any I/O pin to induce a functional disturbance	V_{DD} = 3.3 V, LQFP176, T_A = +25 °C, f_{HCLK} = 120 MHz, conforms to IEC 61000-4-2	2B
V_{EFTB}	Fast transient voltage burst limits to be applied through 100 pF on V_{DD} and V_{SS} pins to induce a functional disturbance	V_{DD} = 3.3 V, LQFP176, T_A = +25 °C, f_{HCLK} = 120 MHz, conforms to IEC 61000-4-2	4A

Designing hardened software to avoid noise problems

EMC characterization and optimization are performed at component level with a typical application environment and simplified MCU software. It should be noted that good EMC performance is highly dependent on the user application and the software in particular.

Therefore it is recommended that the user applies EMC software optimization and prequalification tests in relation with the EMC level requested for his application.

Software recommendations

The software flowchart must include the management of runaway conditions such as:

- Corrupted program counter
- Unexpected reset
- Critical Data corruption (control registers...)

Prequalification trials

Most of the common failures (unexpected reset and program counter corruption) can be reproduced by manually forcing a low state on the NRST pin or the Oscillator pins for 1 second.

To complete these trials, ESD stress can be applied directly on the device, over the range of specification values. When unexpected behavior is detected, the software can be hardened to prevent unrecoverable errors occurring (see application note AN1015).

Electromagnetic Interference (EMI)

The electromagnetic field emitted by the device are monitored while a simple application, executing EEMBC® code, is running. This emission test is compliant with SAE IEC61967-2 standard which specifies the test board and the pin loading.

Table 42. EMI characteristics

Symbol	Parameter	Conditions	Monitored frequency band	Max vs. [f_{HSE}/f_{CPU}] 25/120 MHz	Unit
S_{EMI}	Peak level	V_{DD} = 3.3 V, T_A = 25 °C, LQFP176 package, conforming to SAE J1752/3 EEMBC, code running with ART enabled, peripheral clock disabled	0.1 to 30 MHz	25	dBµV
			30 to 130 MHz		
			130 MHz to 1GHz		
			SAE EMI Level	4	-
		V_{DD} = 3.3 V, T_A = 25 °C, LQFP176 package, conforming to SAE J1752/3 EEMBC, code running with ART enabled, PLL spread spectrum enabled, peripheral clock disabled	0.1 to 30 MHz	28	dBµV
			30 to 130 MHz	26	
			130 MHz to 1GHz	22	
			SAE EMI level	4	-

6.3.14 Absolute maximum ratings (electrical sensitivity)

Based on three different tests (ESD, LU) using specific measurement methods, the device is stressed in order to determine its performance in terms of electrical sensitivity.

Electrostatic discharge (ESD)

Electrostatic discharges (a positive then a negative pulse separated by 1 second) are applied to the pins of each sample according to each pin combination. The sample size depends on the number of supply pins in the device (3 parts × (n+1) supply pins). This test conforms to the JESD22-A114/C101 standard.

Table 43. ESD absolute maximum ratings

Symbol	Ratings	Conditions	Class	Maximum value(1)	Unit
$V_{ESD(HBM)}$	Electrostatic discharge voltage (human body model)	T_A = +25 °C conforming to JESD22-A114	2	2000(2)	V
$V_{ESD(CDM)}$	Electrostatic discharge voltage (charge device model)	T_A = +25 °C conforming to JESD22-C101	II	500	

1. Guaranteed by characterization results, not tested in production.
2. On V_{BAT} pin, $V_{ESD(HBM)}$ is limited to 1000 V.

Static latch-up

Two complementary static tests are required on six parts to assess the latch-up performance:

- A supply overvoltage is applied to each power supply pin
- A current injection is applied to each input, output and configurable I/O pin

These tests are compliant with EIA/JESD 78A IC latch-up standard.

Table 44. Electrical sensitivities

Symbol	Parameter	Conditions	Class
LU	Static latch-up class	T_A = +105 °C conforming to JESD78A	II level A

6.3.15 I/O current injection characteristics

As a general rule, current injection to the I/O pins, due to external voltage below V_{SS} or above V_{DD} (for standard, 3 V-capable I/O pins) should be avoided during normal product operation. However, in order to give an indication of the robustness of the microcontroller in cases when abnormal injection accidentally happens, susceptibility tests are performed on a sample basis during device characterization.

Functional susceptibilty to I/O current injection

While a simple application is executed on the device, the device is stressed by injecting current into the I/O pins programmed in floating input mode. While current is injected into the I/O pin, one at a time, the device is checked for functional failures.

The failure is indicated by an out of range parameter: ADC error above a certain limit (>5 LSB TUE), out of spec current injection on adjacent pins or other functional failure (for example reset, oscillator frequency deviation).

The test results are given in *Table 45*.

Table 45. I/O current injection susceptibility(1)

Symbol	Description	Functional susceptibility		Unit
		Negative injection	Positive injection	
I_{INJ}	Injected current on BOOT0 pin	–0	NA	mA
	Injected current on NRST pin	–0	NA	
	Injected current on TTa pins: PA4 and PA5	–0	+5	
	Injected current on all FT pins	–5	NA	

1. NA stands for “not applicable”.

Note: It is recommended to add a Schottky diode (pin to ground) to analog pins which may potentially inject negative currents.

6.3.16 I/O port characteristics

General input/output characteristics

Unless otherwise specified, the parameters given in *Table 50* are derived from tests performed under the conditions summarized in *Table 14: General operating conditions*.

All I/Os are CMOS and TTL compliant.

Table 46. I/O static characteristics

Symbol	Parameter	Conditions	Min	Typ	Max	Unit
V_{IL}	FT, TTa and NRST I/O input low level voltage	1.7 V≤V_{DD}≤3.6 V	-	-	$0.35V_{DD}$–0.04(1)	V
					$0.3V_{DD}$(2)	
	BOOT0 I/O input low level voltage	1.75 V≤V_{DD} ≤3.6 V, –40 °C≤T_A ≤105 °C	-	-	$0.1V_{DD}$+0.1(1)	
		1.7 V≤V_{DD} ≤3.6 V, 0 °C≤T_A ≤105 °C	-	-		
V_{IH}	FT, TTa and NRST I/O input high level voltage(5)	1.7 V≤V_{DD}≤3.6 V	$0.45V_{DD}$+0.3(1)	-	-	V
			$0.7V_{DD}$(2)			
	BOOT0 I/O input high level voltage	1.75 V≤V_{DD} ≤3.6 V, –40 °C≤T_A ≤105 °C	$0.17V_{DD}$+0.7(1)	-	-	
		1.7 V≤V_{DD} ≤3.6 V, 0 °C≤T_A ≤105 °C				
V_{HYS}	FT, TTa and NRST I/O input hysteresis	1.7 V≤V_{DD}≤3.6 V	$0.45V_{DD}$+0.3(1)	-	-	V
	BOOT0 I/O input hysteresis	1.75 V≤V_{DD} ≤3.6 V, –40 °C≤T_A ≤105 °C	10%V_{DDIO}(1)(3)	-	-	
		1.7 V≤V_{DD} ≤3.6 V, 0 °C≤T_A ≤105 °C	100(1)	-	-	
I_{lkg}	I/O input leakage current (4)	V_{SS} ≤V_{IN} ≤V_{DD}	-	-	±1	µA
	I/O FT input leakage current (5)	V_{IN} = 5 V	-	-	3	

Table 46. I/O static characteristics (continued)

Symbol	Parameter		Conditions	Min	Typ	Max	Unit
R_{PU}	Weak pull-up equivalent resistor(6)	All pins except for PA10/PB12 (OTG_FS_ID, OTG_HS_ID)	$V_{IN} = V_{SS}$	30	40	50	kΩ
		PA10/PB12 (OTG_FS_ID, OTG_HS_ID)	-	7	10	14	
R_{PD}	Weak pull-down equivalent resistor(7)	All pins except for PA10/PB12 (OTG_FS_ID, OTG_HS_ID)	$V_{IN} = V_{DD}$	30	40	50	
		PA10/PB12 (OTG_FS_ID, OTG_HS_ID)	-	7	10	14	
C_{IO}(8)	I/O pin capacitance		-	-	5	-	pF

1. Guaranteed by design, not tested in production.
2. Guaranteed by tests in production.
3. With a minimum of 200 mV.
4. Leakage could be higher than the maximum value, if negative current is injected on adjacent pins, Refer to *Table 45: I/O current injection susceptibility*
5. To sustain a voltage higher than VDD +0.3 V, the internal pull-up/pull-down resistors must be disabled. Leakage could be higher than the maximum value, if negative current is injected on adjacent pins.Refer to *Table 45: I/O current injection susceptibility*
6. Pull-up resistors are designed with a true resistance in series with a switchable PMOS. This PMOS contribution to the series resistance is minimum (~10% order).
7. Pull-down resistors are designed with a true resistance in series with a switchable NMOS. This NMOS contribution to the series resistance is minimum (~10% order).
8. Hysteresis voltage between Schmitt trigger switching levels. Based on characterization, not tested in production.

All I/Os are CMOS and TTL compliant (no software configuration required). Their characteristics cover more than the strict CMOS-technology or TTL parameters. The coverage of these requirements for FT I/Os is shown in *Figure 38*.

Figure 38. FT I/O input characteristics

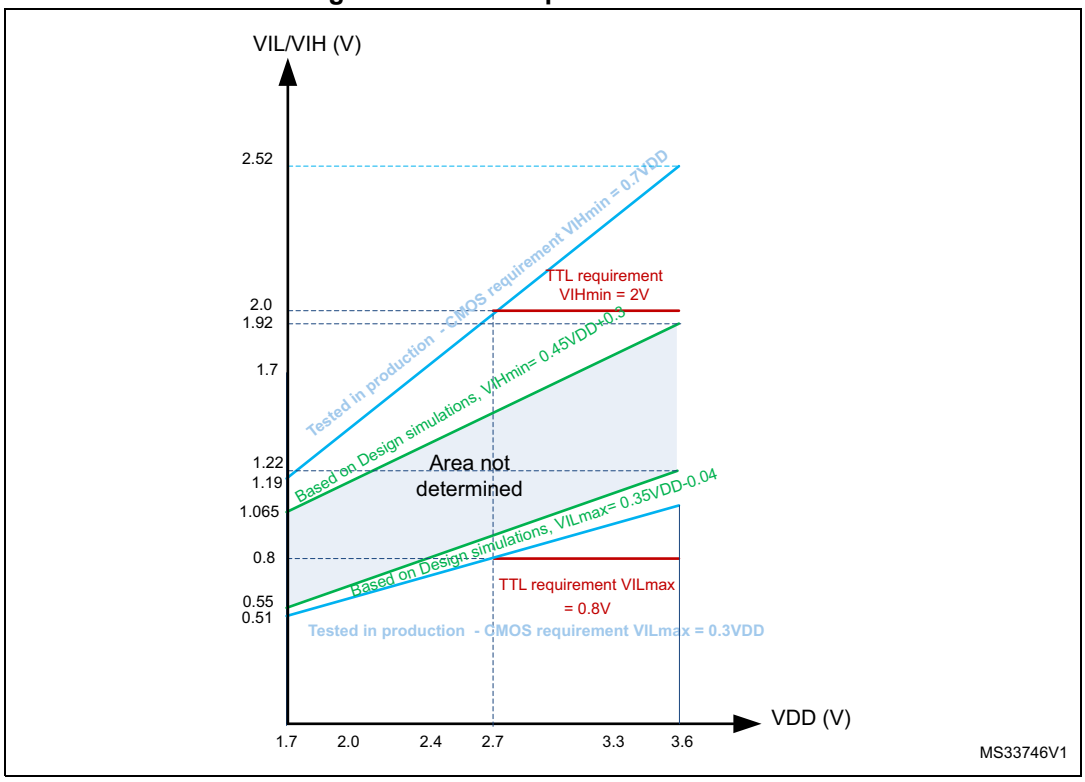

Output driving current

The GPIOs (general purpose input/outputs) can sink or source up to ±8 mA, and sink or source up to ±20 mA (with a relaxed V_{OL}/V_{OH}) except PC13, PC14 and PC15 which can sink or source up to ±3mA. When using the PC13 to PC15 GPIOs in output mode, the speed should not exceed 2 MHz with a maximum load of 30 pF.

In the user application, the number of I/O pins which can drive current must be limited to respect the absolute maximum rating specified in *Section 6.2*:

- The sum of the currents sourced by all the I/Os on $V_{DD,}$ plus the maximum Run consumption of the MCU sourced on $V_{DD,}$ cannot exceed the absolute maximum rating I_{VDD} (see *Table 12*).
- The sum of the currents sunk by all the I/Os on V_{SS} plus the maximum Run consumption of the MCU sunk on V_{SS} cannot exceed the absolute maximum rating I_{VSS} (see *Table 12*).

Output voltage levels

Unless otherwise specified, the parameters given in *Table 47* are derived from tests performed under ambient temperature and V_{DD} supply voltage conditions summarized in *Table 14*. All I/Os are CMOS and TTL compliant.

Table 47. Output voltage characteristics(1)

Symbol	Parameter	Conditions	Min	Max	Unit
V_{OL}(2)	Output low level voltage for an I/O pin when 8 pins are sunk at same time	CMOS ports I_{IO} = +8 mA 2.7 V < V_{DD} < 3.6 V	-	0.4	V
V_{OH}(3)	Output high level voltage for an I/O pin when 8 pins are sourced at same time		V_{DD}–0.4	-	
V_{OL} (2)	Output low level voltage for an I/O pin when 8 pins are sunk at same time	TTL ports I_{IO} =+ 8mA 2.7 V < V_{DD} < 3.6 V	-	0.4	V
V_{OH} (3)	Output high level voltage for an I/O pin when 8 pins are sourced at same time		2.4	-	
V_{OL}(2)(4)	Output low level voltage for an I/O pin when 8 pins are sunk at same time	I_{IO} = +20 mA 2.7 V < V_{DD} < 3.6 V	-	1.3	V
V_{OH}(3)(4)	Output high level voltage for an I/O pin when 8 pins are sourced at same time		V_{DD}–1.3	-	
V_{OL}(2)(4)	Output low level voltage for an I/O pin when 8 pins are sunk at same time	I_{IO} = +6 mA 2 V < V_{DD} < 2.7 V	-	0.4	V
V_{OH}(3)(4)	Output high level voltage for an I/O pin when 8 pins are sourced at same time		V_{DD}–0.4	-	

1. PC13, PC14, PC15 and PI8 are supplied through the power switch. Since the switch only sinks a limited amount of current (3 mA), the use of GPIOs PC13 to PC15 and PI8 in output mode is limited: the speed should not exceed 2 MHz with a maximum load of 30 pF and these I/Os must not be used as a current source (e.g. to drive an LED).
2. The I_{IO} current sunk by the device must always respect the absolute maximum rating specified in *Table 12* and the sum of I_{IO} (I/O ports and control pins) must not exceed I_{VSS}.
3. The I_{IO} current sourced by the device must always respect the absolute maximum rating specified in *Table 12* and the sum of I_{IO} (I/O ports and control pins) must not exceed I_{VDD}.
4. Guaranteed by characterization results, not tested in production.

Input/output AC characteristics

The definition and values of input/output AC characteristics are given in *Figure 39* and *Table 48*, respectively.

Unless otherwise specified, the parameters given in *Table 48* are derived from tests performed under the ambient temperature and V_{DD} supply voltage conditions summarized in *Table 14*.

Table 48. I/O AC characteristics(1)

OSPEEDRy [1:0] bit value(1)	Symbol	Parameter	Conditions	Min	Typ	Max	Unit
00	$f_{max(IO)out}$	Maximum frequency(2)	C_L = 50 pF, V_{DD} > 2.70 V	-	-	4	MHz
			C_L = 50 pF, V_{DD} > 1.8 V	-	-	2	
			C_L = 10 pF, V_{DD} > 2.70 V	-	-	8	
			C_L = 10 pF, V_{DD} > 1.8 V	-	-	4	
	$t_{f(IO)out}$/ $t_{r(IO)out}$	Output high to low level fall time and output low to high level rise time	C_L = 50 pF, V_{DD} = 1.8 V to 3.6 V	-	-	100	ns

Table 48. I/O AC characteristics(1) (continued)

OSPEEDRy [1:0] bit value(1)	Symbol	Parameter	Conditions	Min	Typ	Max	Unit
01	$f_{max(IO)out}$	Maximum frequency(2)	C_L = 50 pF, V_{DD} > 2.70 V	-	-	25	MHz
			C_L = 50 pF, V_{DD} > 1.8 V	-	-	12.5	
			C_L = 10 pF, V_{DD} > 2.70 V	-	-	50(3)	
			C_L = 10 pF, V_{DD} > 1.8 V	-	-	20	
	$t_{f(IO)out}$/ $t_{r(IO)out}$	Output high to low level fall time and output low to high level rise time	C_L = 50 pF, V_{DD} >2.7 V	-	-	10	ns
			C_L = 50 pF, V_{DD} > 1.8 V	-	-	20	
			C_L = 10 pF, V_{DD} > 2.70 V	-	-	6	
			C_L = 10 pF, V_{DD} > 1.8 V	-	-	10	
10	$f_{max(IO)out}$	Maximum frequency(2)	C_L = 40 pF, V_{DD} > 2.70 V	-	-	25	MHz
			C_L = 40 pF, V_{DD} > 1.8 V	-	-	20	
			C_L = 10 pF, V_{DD} > 2.70 V	-	-	100(3)	
			C_L = 10 pF, V_{DD} > 1.8 V	-	-	50(3)	
	$t_{f(IO)out}$/ $t_{r(IO)out}$	Output high to low level fall time and output low to high level rise time	C_L = 40 pF, V_{DD} > 2.70 V	-	-	6	ns
			C_L = 40 pF, V_{DD} > 1.8 V	-	-	10	
			C_L = 10 pF, V_{DD} > 2.70 V	-	-	4	
			C_L = 10 pF, V_{DD} > 1.8 V	-	-3	6	
11	$f_{max(IO)out}$	Maximum frequency(2)	C_L = 30 pF, V_{DD} > 2.70 V	-	-	100(3)	MHz
			C_L = 30 pF, V_{DD} > 1.8 V	-	-	50(3)	
			C_L = 10 pF, V_{DD} > 2.70 V	-	-	120(3)	
			C_L = 10 pF, V_{DD} > 1.8 V	-	-	100(3)	
	$t_{f(IO)out}$/ $t_{r(IO)out}$	Output high to low level fall time and output low to high level rise time	C_L = 30 pF, V_{DD} > 2.70 V	-	-	4	ns
			C_L = 30 pF, V_{DD} > 1.8 V	-	-	6	
			C_L = 10 pF, V_{DD} > 2.70 V	-	-	2.5	
			C_L = 10 pF, V_{DD} > 1.8 V	-	-	4	
-	t_{EXTIpw}	Pulse width of external signals detected by the EXTI controller	-	10	-	-	ns

1. The I/O speed is configured using the OSPEEDRy[1:0] bits. Refer to the STM32F20/21xxx reference manual for a description of the GPIOx_SPEEDR GPIO port output speed register.
2. The maximum frequency is defined in *Figure 39*.
3. For maximum frequencies above 50 MHz and V_{DD} above 2.4 V, the compensation cell should be used.

Figure 39. I/O AC characteristics definition

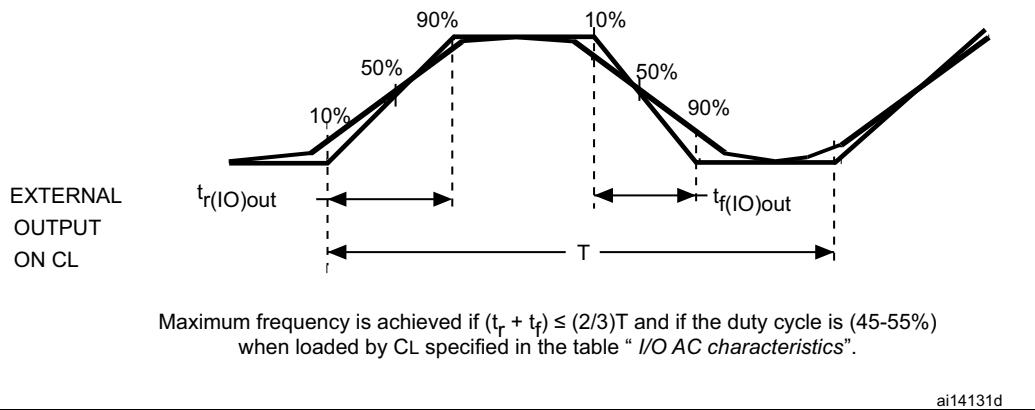

6.3.17 NRST pin characteristics

The NRST pin input driver uses CMOS technology. It is connected to a permanent pull-up resistor, R_{PU} (see *Table 49*).

Unless otherwise specified, the parameters given in *Table 49* are derived from tests performed under the ambient temperature and V_{DD} supply voltage conditions summarized in *Table 14*.

Table 49. NRST pin characteristics

Symbol	Parameter	Conditions	Min	Typ	Max	Unit
R_{PU}	Weak pull-up equivalent resistor(1)	$V_{IN} = V_{SS}$	30	40	50	kΩ
$V_{F(NRST)}$(2)	NRST Input filtered pulse	-	-	-	100	ns
$V_{NF(NRST)}$(2)	NRST Input not filtered pulse	V_{DD} > 2.7 V	300	-	-	ns
T_{NRST_OUT}	Generated reset pulse duration	Internal Reset source	20	-	-	µs

1. The pull-up is designed with a true resistance in series with a switchable PMOS. This PMOS contribution to the series resistance must be minimum (~10% order).
2. Guaranteed by design, not tested in production.

Figure 40. Recommended NRST pin protection

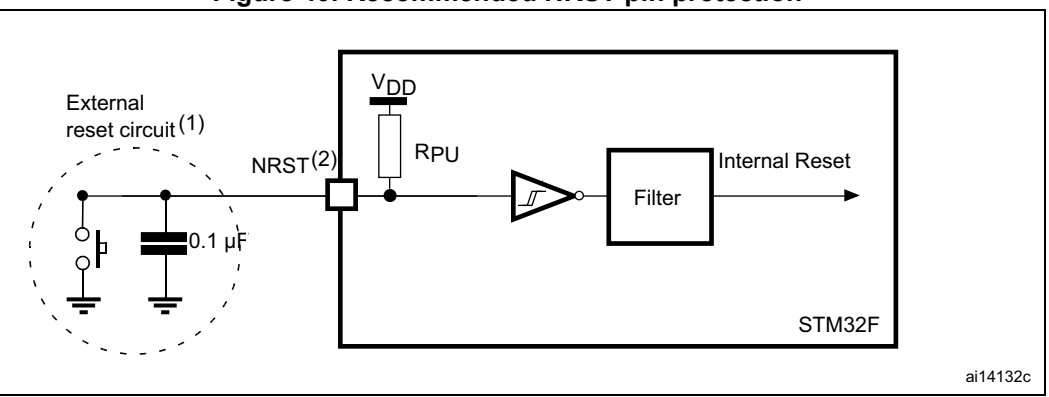

1. The reset network protects the device against parasitic resets.
2. The user must ensure that the level on the NRST pin can go below the $V_{IL(NRST)}$ max level specified in *Table 49*. Otherwise the reset is not taken into account by the device.

6.3.18 TIM timer characteristics

The parameters given in *Table 50* and *Table 51* are guaranteed by design.

Refer to *Section 6.3.16: I/O port characteristics* for details on the input/output alternate function characteristics (output compare, input capture, external clock, PWM output).

Table 50. Characteristics of TIMx connected to the APB1 domain(1)

Symbol	Parameter	Conditions	Min	Max	Unit
$t_{res(TIM)}$	Timer resolution time	AHB/APB1 prescaler distinct from 1, $f_{TIMxCLK}$ = 60 MHz	1	-	$t_{TIMxCLK}$
			16.7	-	ns
		AHB/APB1 prescaler = 1, $f_{TIMxCLK}$ = 30 MHz	1	-	$t_{TIMxCLK}$
			33.3	-	ns
f_{EXT}	Timer external clock frequency on CH1 to CH4	$f_{TIMxCLK}$ = 60 MHz APB1= 30 MHz	0	$f_{TIMxCLK}/2$	MHz
			0	30	MHz
Res_{TIM}	Timer resolution		-	16/32	bit
$t_{COUNTER}$	16-bit counter clock period when internal clock is selected		1	65536	$t_{TIMxCLK}$
			0.0167	1092	µs
	32-bit counter clock period when internal clock is selected		1	-	$t_{TIMxCLK}$
			0.0167	71582788	µs
t_{MAX_COUNT}	Maximum possible count		-	65536 × 65536	$t_{TIMxCLK}$
			-	71.6	s

1. TIMx is used as a general term to refer to the TIM2, TIM3, TIM4, TIM5, TIM6, TIM7, and TIM12 timers.

Table 51. Characteristics of TIMx connected to the APB2 domain(1)

Symbol	Parameter	Conditions	Min	Max	Unit
$t_{res(TIM)}$	Timer resolution time	AHB/APB2 prescaler distinct from 1, $f_{TIMxCLK}$ = 120 MHz	1	-	$t_{TIMxCLK}$
			8.3	-	ns
		AHB/APB2 prescaler = 1, $f_{TIMxCLK}$ = 60 MHz	1	-	$t_{TIMxCLK}$
			16.7	-	ns
f_{EXT}	Timer external clock frequency on CH1 to CH4	$f_{TIMxCLK}$ = 120 MHz APB2 = 60 MHz	0	$f_{TIMxCLK}/2$	MHz
			0	60	MHz
Res_{TIM}	Timer resolution		-	16	bit
$t_{COUNTER}$	16-bit counter clock period when internal clock is selected		1	65536	$t_{TIMxCLK}$
			0.0083	546	µs
t_{MAX_COUNT}	Maximum possible count		-	65536 × 65536	$t_{TIMxCLK}$
			-	35.79	s

1. TIMx is used as a general term to refer to the TIM1, TIM8, TIM9, TIM10, and TIM11 timers.

6.3.19 Communications interfaces

I²C interface characteristics

STM32F205xx and STM32F207xx I²C interface meets the requirements of the standard I²C communication protocol with the following restrictions: the I/O pins SDA and SCL are mapped to are not “true” open-drain. When configured as open-drain, the PMOS connected between the I/O pin and V_{DD} is disabled, but is still present.

The I²C characteristics are described in *Table 52*. Refer also to *Section 6.3.16: I/O port characteristics* for more details on the input/output alternate function characteristics (SDA and SCL).

Table 52. I²C characteristics

Symbol	Parameter	Standard mode I²C(1)(2)		Fast mode I²C(1)(2)		Unit
		Min	Max	Min	Max	
$t_{w(SCLL)}$	SCL clock low time	4.7	-	1.3	-	µs
$t_{w(SCLH)}$	SCL clock high time	4.0	-	0.6	-	
$t_{su(SDA)}$	SDA setup time	250	-	100	-	ns
$t_{h(SDA)}$	SDA data hold time	-	3450(3)	-	900(3)	
$t_{r(SDA)}$ $t_{r(SCL)}$	SDA and SCL rise time	-	1000	-	300	
$t_{f(SDA)}$ $t_{f(SCL)}$	SDA and SCL fall time	-	300	-	300	
$t_{h(STA)}$	Start condition hold time	4.0	-	0.6	-	µs
$t_{su(STA)}$	Repeated Start condition setup time	4.7	-	0.6	-	
$t_{su(STO)}$	Stop condition setup time	4.0	-	0.6	-	µs
$t_{w(STO:STA)}$	Stop to Start condition time (bus free)	4.7	-	1.3	-	µs
C_b	Capacitive load for each bus line	-	400	-	400	pF
t_{SP}	Pulse width of the spikes that are suppressed by the analog filter	0	50(4)	0	50	ns

1. Guaranteed by design, not tested in production.
2. f_{PCLK1} must be at least 2 MHz to achieve standard mode I²C frequencies. It must be at least 4 MHz to achieve fast mode I²C frequencies, and a multiple of 10 MHz to reach the 400 kHz maximum I²C fast mode clock.
3. The maximum Data hold time has only to be met if the interface does not stretch the low period of the SCL signal.
4. The minimum width of the spikes filtered by the analog filter is above $t_{SP(max)}$.

Figure 41. I²C bus AC waveforms and measurement circuit

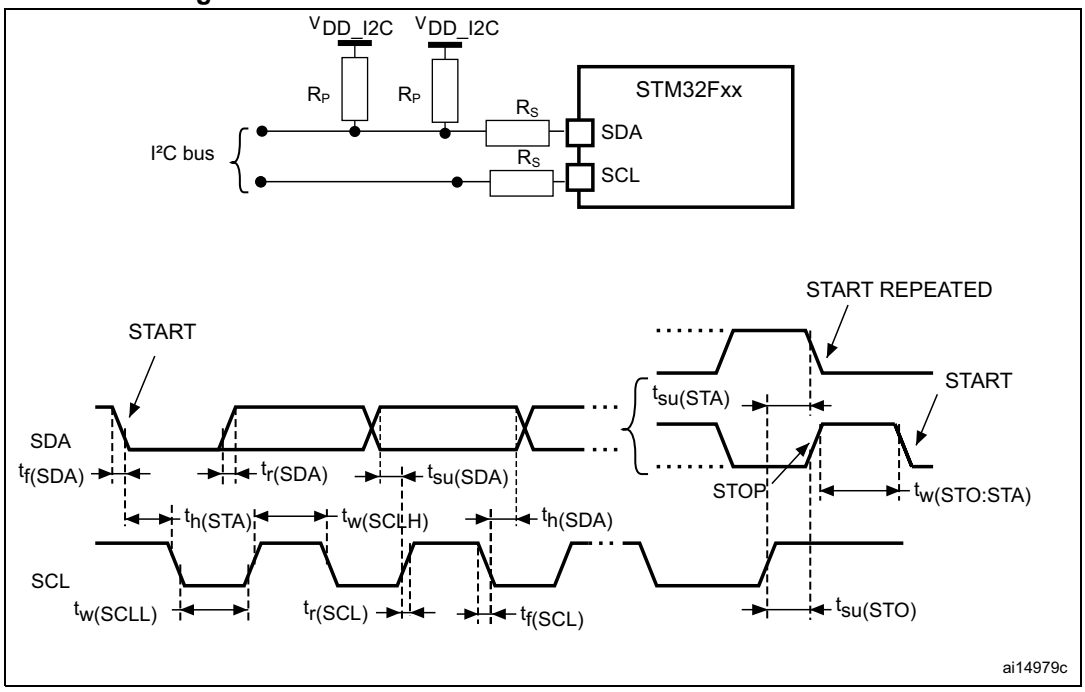

1. R_S= series protection resistor.
2. R_P = external pull-up resistor.
3. V_{DD_I2C} is the I²C bus power supply.

Table 53. SCL frequency (f_{PCLK1}= 30 MHz.,V_{DD} = 3.3 V)(1)(2)

f_{SCL} (kHz)	I2C_CCR value
	R_P = 4.7 kΩ
400	0x8019
300	0x8021
200	0x8032
100	0x0096
50	0x012C
20	0x02EE

1. R_P = External pull-up resistance, f_{SCL} = I²C speed,
2. For speeds around 200 kHz, the tolerance on the achieved speed is of ±5%. For other speed ranges, the tolerance on the achieved speed ±2%. These variations depend on the accuracy of the external components used to design the application.

I^2S - SPI interface characteristics

Unless otherwise specified, the parameters given in *Table 54* for SPI or in *Table 55* for I^2S are derived from tests performed under the ambient temperature, f_{PCLKx} frequency and V_{DD} supply voltage conditions summarized in *Table 14*.

Refer to *Section 6.3.16: I/O port characteristics* for more details on the input/output alternate function characteristics (NSS, SCK, MOSI, MISO for SPI and WS, CK, SD for I^2S).

Table 54. SPI characteristics

Symbol	Parameter	Conditions	Min	Max	Unit
f_{SCK} $1/t_{c(SCK)}$	SPI clock frequency	SPI1 master/slave mode	-	30	MHz
		SPI2/SPI3 master/slave mode	-	15	
$t_{r(SCL)}$ $t_{f(SCL)}$	SPI clock rise and fall time	Capacitive load: C = 30 pF, f_{PCLK} = 30 MHz	-	8	ns
DuCy(SCK)	SPI slave input clock duty cycle	Slave mode	30	70	%
$t_{su(NSS)}$(1)	NSS setup time	Slave mode	$4t_{PCLK}$	-	ns
$t_{h(NSS)}$(1)	NSS hold time	Slave mode	$2t_{PCLK}$	-	
$t_{w(SCLH)}$(1) $t_{w(SCLL)}$(1)	SCK high and low time	Master mode, f_{PCLK} = 30 MHz, presc = 2	t_{PCLK}-3	t_{PCLK}+3	
$t_{su(MI)}$(1) $t_{su(SI)}$(1)	Data input setup time	Master mode	5	-	
		Slave mode	5	-	
$t_{h(MI)}$(1) $t_{h(SI)}$(1)	Data input hold time	Master mode	5	-	
		Slave mode	4	-	
$t_{a(SO)}$(1)(2)	Data output access time	Slave mode, f_{PCLK} = 30 MHz	0	$3t_{PCLK}$	
$t_{dis(SO)}$(1)(3)	Data output disable time	Slave mode	2	10	
$t_{v(SO)}$(1)	Data output valid time	Slave mode (after enable edge)	-	25	
$t_{v(MO)}$(1)	Data output valid time	Master mode (after enable edge)	-	5	
$t_{h(SO)}$(1)	Data output hold time	Slave mode (after enable edge)	15	-	
$t_{h(MO)}$(1)		Master mode (after enable edge)	2	-	

1. Guaranteed by characterization results, not tested in production.
2. Min time is for the minimum time to drive the output and the max time is for the maximum time to validate the data.
3. Min time is for the minimum time to invalidate the output and the max time is for the maximum time to put the data in Hi-Z

Figure 42. SPI timing diagram - slave mode and CPHA = 0

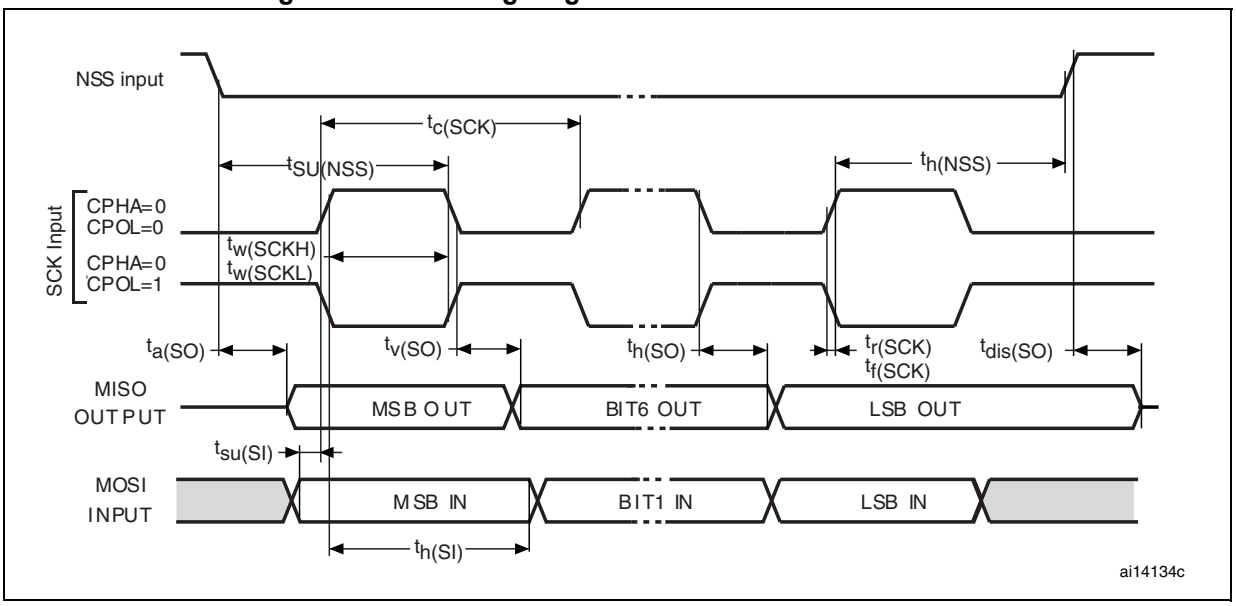

Figure 43. SPI timing diagram - slave mode and CPHA = 1

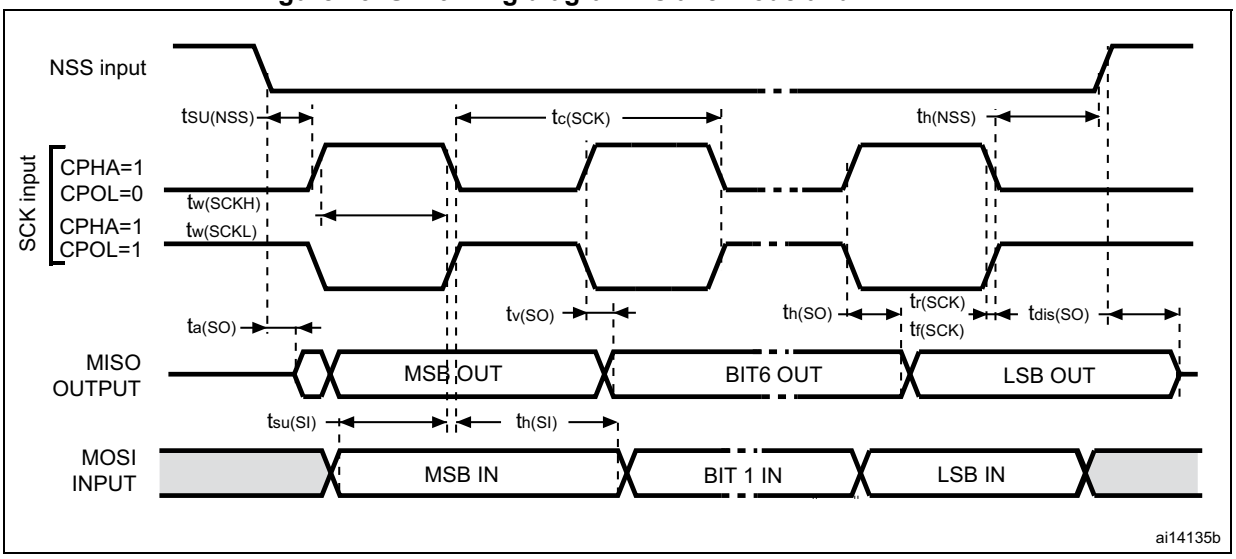

Figure 44. SPI timing diagram - master mode

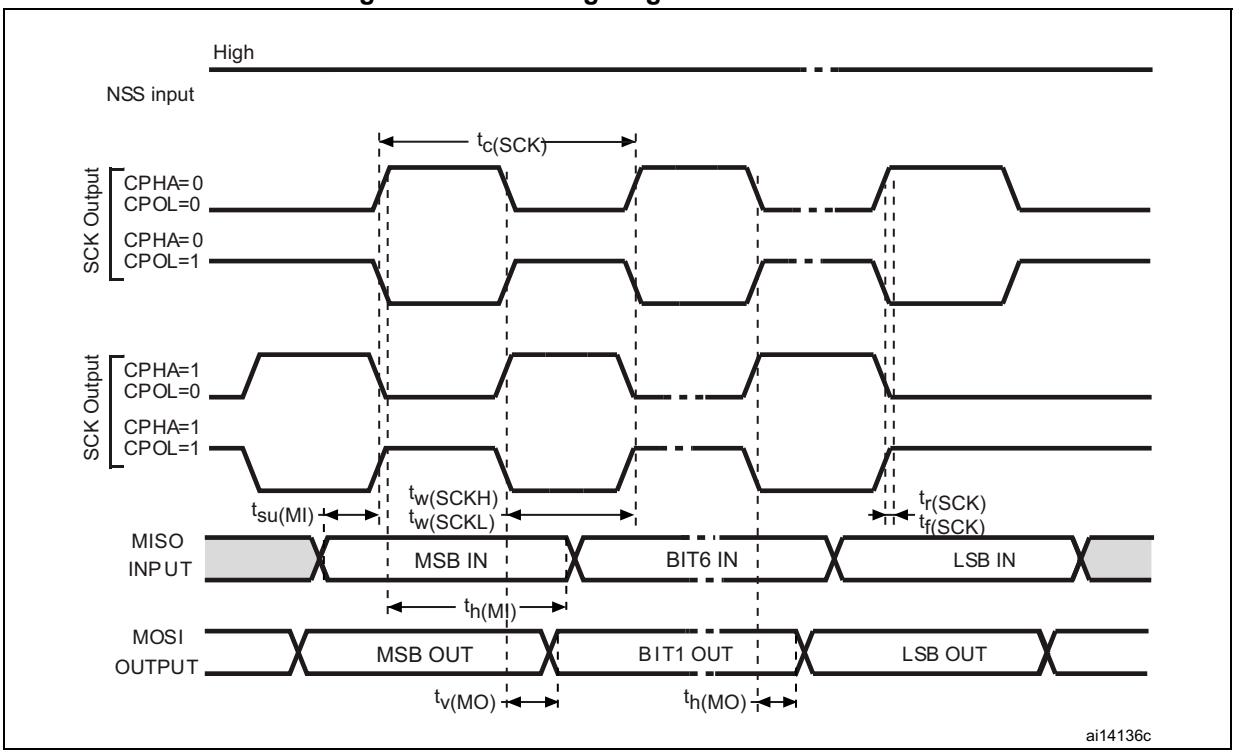

Table 55. I^2S characteristics

Symbol	Parameter	Conditions	Min	Max	Unit
f_{CK} $1/t_{c(CK)}$	I^2S clock frequency	Master, 16-bit data, audio frequency = 48 kHz, main clock disabled	1.23	1.24	MHz
		Slave	0	$64F_S$ (1)	
$t_{r(CK)}$ $t_{f(CK)}$	I^2S clock rise and fall time	Capacitive load C_L = 50 pF	-	(2)	ns
$t_{v(WS)}$ (3)	WS valid time	Master	0.3	-	
$t_{h(WS)}$ (3)	WS hold time	Master	0	-	
$t_{su(WS)}$ (3)	WS setup time	Slave	3	-	
$t_{h(WS)}$ (3)	WS hold time	Slave	0	-	
$t_{w(CKH)}$ (3) $t_{w(CKL)}$ (3)	CK high and low time	Master f_{PCLK}= 30 MHz	396	-	
$t_{su(SD_MR)}$ (3) $t_{su(SD_SR)}$ (3)	Data input setup time	Master receiver Slave receiver	45 0	-	
$t_{h(SD_MR)}$ (3)(4) $t_{h(SD_SR)}$ (3)(4)	Data input hold time	Master receiver: f_{PCLK}= 30 MHz, Slave receiver: f_{PCLK}= 30 MHz	13 0	-	
$t_{v(SD_ST)}$ (3)(4)	Data output valid time	Slave transmitter (after enable edge)	-	30	
$t_{h(SD_ST)}$ (3)	Data output hold time	Slave transmitter (after enable edge)	10	-	
$t_{v(SD_MT)}$ (3)(4)	Data output valid time	Master transmitter (after enable edge)	-	6	
$t_{h(SD_MT)}$ (3)	Data output hold time	Master transmitter (after enable edge)	0	-	

1. F_S is the sampling frequency. Refer to the I2S section of the STM32F20xxx/21xxx reference manual for more details. f_{CK} values reflect only the digital peripheral behavior which leads to a minimum of (I2SDIV/(2*I2SDIV+ODD), a maximum of (I2SDIV+ODD)/(2*I2SDIV+ODD) and F_S maximum values for each mode/condition.
2. Refer to *Table 48: I/O AC characteristics*.
3. Guaranteed by design, not tested in production.
4. Depends on f_{PCLK}. For example, if f_{PCLK}=8 MHz, then T_{PCLK} = $1/f_{PLCLK}$ =125 ns.

Figure 45. I²S slave timing diagram (Philips protocol)(1)

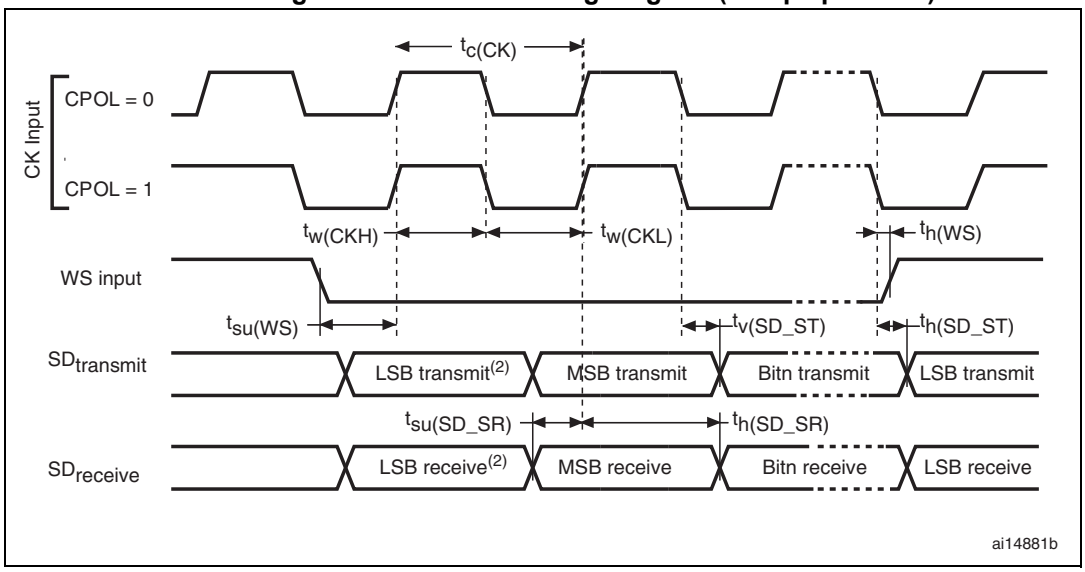

1. LSB transmit/receive of the previously transmitted byte. No LSB transmit/receive is sent before the first byte.

Figure 46. I²S master timing diagram (Philips protocol)(1)

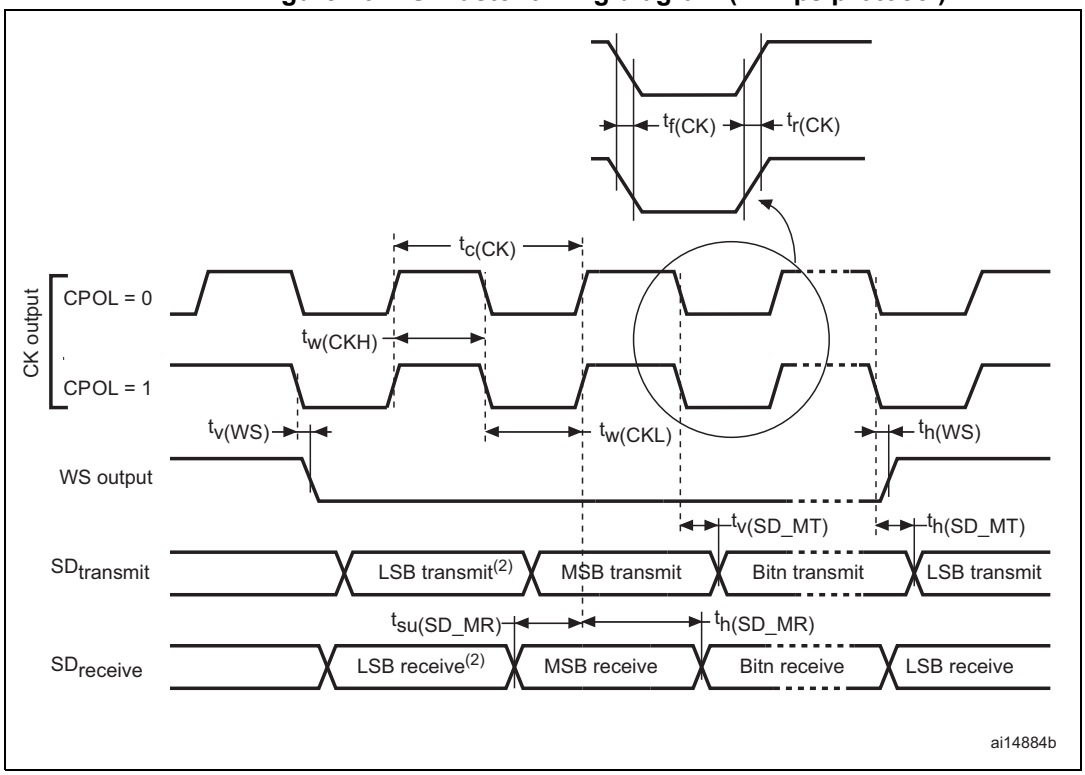

1. Guaranteed by characterization results, not tested in production.
2. LSB transmit/receive of the previously transmitted byte. No LSB transmit/receive is sent before the first byte.

USB OTG FS characteristics

The USB OTG interface is USB-IF certified (Full-Speed). This interface is present in both the USB OTG HS and USB OTG FS controllers.

Table 56. USB OTG FS startup time

Symbol	Parameter	Max	Unit
$t_{STARTUP}$(1)	USB OTG FS transceiver startup time	1	µs

1. Guaranteed by design, not tested in production.

Table 57. USB OTG FS DC electrical characteristics

Symbol		Parameter	Conditions	Min(1)	Typ	Max(1)	Unit
Input levels	V_{DD}	USB OTG FS operating voltage		3.0(2)	-	3.6	V
	V_{DI}(3)	Differential input sensitivity	I(USB_FS_DP/DM, USB_HS_DP/DM)	0.2	-	-	V
	V_{CM}(3)	Differential common mode range	Includes V_{DI} range	0.8	-	2.5	
	V_{SE}(3)	Single ended receiver threshold		1.3	-	2.0	
Output levels	V_{OL}	Static output level low	R_L of 1.5 kΩ to 3.6 V(4)	-	-	0.3	V
	V_{OH}	Static output level high	R_L of 15 kΩ to V_{SS}(4)	2.8	-	3.6	
R_{PD}		PA11, PA12, PB14, PB15 (USB_FS_DP/DM, USB_HS_DP/DM)	$V_{IN} = V_{DD}$	17	21	24	kΩ
		PA9, PB13 (OTG_FS_VBUS, OTG_HS_VBUS)		0.65	1.1	2.0	
R_{PU}		PA12, PB15 (USB_FS_DP, USB_HS_DP)	$V_{IN} = V_{SS}$	1.5	1.8	2.1	
		PA9, PB13 (OTG_FS_VBUS, OTG_HS_VBUS)	$V_{IN} = V_{SS}$	0.25	0.37	0.55	

1. All the voltages are measured from the local ground potential.
2. The STM32F205xx and STM32F207xx USB OTG FS functionality is ensured down to 2.7 V but not the full USB OTG FS electrical characteristics which are degraded in the 2.7-to-3.0 V V_{DD} voltage range.
3. Guaranteed by design, not tested in production.
4. R_L is the load connected on the USB OTG FS drivers

Figure 47. USB OTG FS timings: definition of data signal rise and fall time

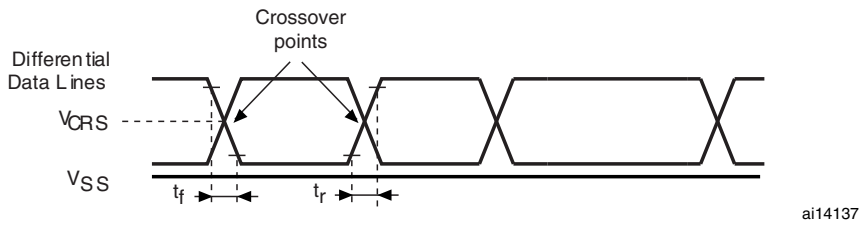

Table 58. USB OTG FS electrical characteristics(1)

Driver characteristics					
Symbol	**Parameter**	**Conditions**	**Min**	**Max**	**Unit**
t_r	Rise time(2)	C_L = 50 pF	4	20	ns
t_f	Fall time(2)	C_L = 50 pF	4	20	ns
t_{rfm}	Rise/fall time matching	t_r/t_f	90	110	%
V_{CRS}	Output signal crossover voltage	-	1.3	2.0	V

1. Guaranteed by design, not tested in production.
2. Measured from 10% to 90% of the data signal. For more detailed informations, refer to USB Specification - Chapter 7 (version 2.0).

USB HS characteristics

Table 59 shows the USB HS operating voltage.

Table 59. USB HS DC electrical characteristics

Symbol		Parameter	Min(1)	Max(1)	Unit
Input level	V_{DD}	USB OTG HS operating voltage	2.7	3.6	V

1. All the voltages are measured from the local ground potential.

Table 60. Clock timing parameters

Parameter(1)		Symbol	Min	Nominal	Max	Unit
Frequency (first transition)	8-bit ±10%	F_{START_8BIT}	54	60	66	MHz
Frequency (steady state) ±500 ppm		F_{STEADY}	59.97	60	60.03	MHz
Duty cycle (first transition)	8-bit ±10%	D_{START_8BIT}	40	50	60	%
Duty cycle (steady state) ±500 ppm		D_{STEADY}	49.975	50	50.025	%
Time to reach the steady state frequency and duty cycle after the first transition		T_{STEADY}	-	-	1.4	ms
Clock startup time after the de-assertion of SuspendM	Peripheral	T_{START_DEV}	-	-	5.6	ms
	Host	T_{START_HOST}	-	-	-	
PHY preparation time after the first transition of the input clock		T_{PREP}	-	-	-	µs

1. Guaranteed by design, not tested in production.

Figure 48. ULPI timing diagram

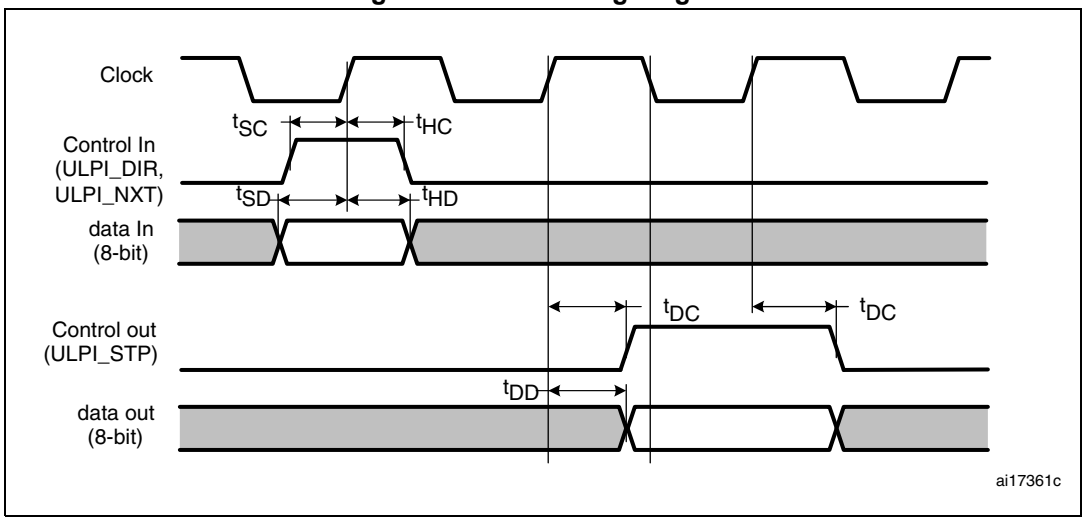

Table 61. ULPI timing

Symbol	Parameter	Value(1)		Unit
		Min	Max	
t_{SC}	Control in (ULPI_DIR) setup time	-	2.0	ns
	Control in (ULPI_NXT) setup time	-	1.5	
t_{HC}	Control in (ULPI_DIR, ULPI_NXT) hold time	0	-	
t_{SD}	Data in setup time	-	2.0	
t_{HD}	Data in hold time	0	-	
t_{DC}	Control out (ULPI_STP) setup time and hold time	-	9.2	
t_{DD}	Data out available from clock rising edge	-	10.7	

1. V_{DD} = 2.7 V to 3.6 V and T_A = –40 to 85 °C.

Ethernet characteristics

Table 62 shows the Ethernet operating voltage.

Table 62. Ethernet DC electrical characteristics

Symbol		Parameter	Min(1)	Max(1)	Unit
Input level	V_{DD}	Ethernet operating voltage	2.7	3.6	V

1. All the voltages are measured from the local ground potential.

Table 63 gives the list of Ethernet MAC signals for the SMI (station management interface) and *Figure 49* shows the corresponding timing diagram.

Figure 49. Ethernet SMI timing diagram

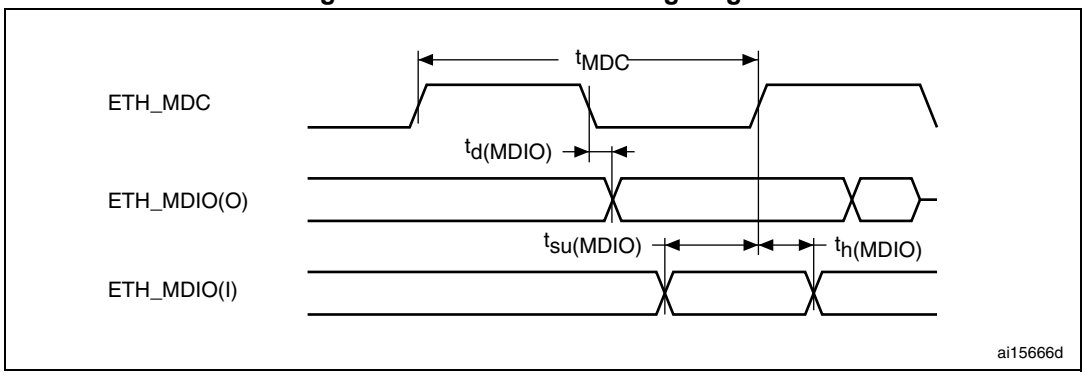

Table 63. Dynamics characteristics: Ethernet MAC signals for SMI

Symbol	Rating	Min	Typ	Max	Unit
t_{MDC}	MDC cycle time (2.38 MHz)	411	420	425	ns
$t_{d(MDIO)}$	MDIO write data valid time	6	10	13	ns
$t_{su(MDIO)}$	Read data setup time	12	-	-	ns
$t_{h(MDIO)}$	Read data hold time	0	-	-	ns

Table 64 gives the list of Ethernet MAC signals for the RMII and *Figure 50* shows the corresponding timing diagram.

Figure 50. Ethernet RMII timing diagram

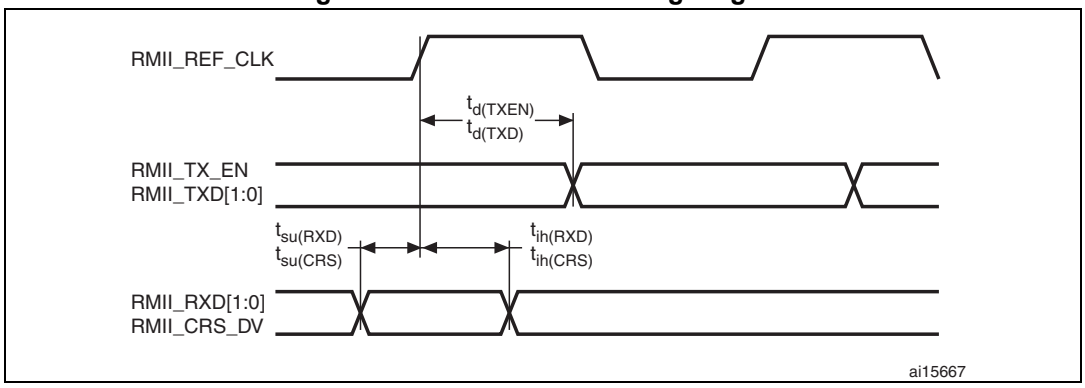

Table 64. Dynamics characteristics: Ethernet MAC signals for RMII

Symbol	Rating	Min	Typ	Max	Unit
$t_{su(RXD)}$	Receive data setup time	1	-	-	ns
$t_{ih(RXD)}$	Receive data hold time	1.5	-	-	
$t_{su(CRS)}$	Carrier sense set-up time	0	-	-	
$t_{ih(CRS)}$	Carrier sense hold time	2	-	-	
$t_{d(TXEN)}$	Transmit enable valid delay time	9	11	13	
$t_{d(TXD)}$	Transmit data valid delay time	9	11.5	14	

Table 65 gives the list of Ethernet MAC signals for MII and *Figure 50* shows the corresponding timing diagram.

Figure 51. Ethernet MII timing diagram

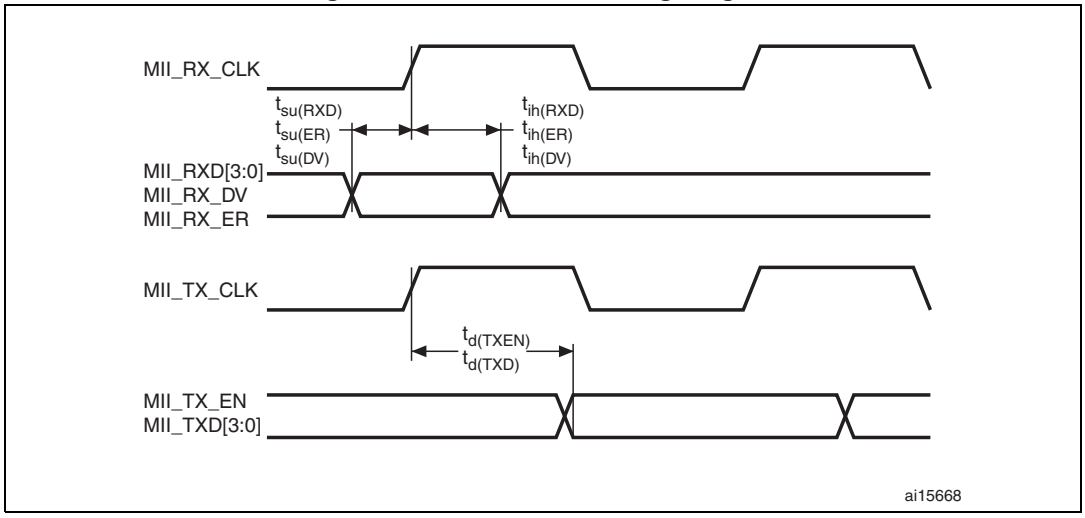

Table 65. Dynamics characteristics: Ethernet MAC signals for MII

Symbol	Rating	Min	Typ	Max	Unit
$t_{su(RXD)}$	Receive data setup time	7.5	-	-	ns
$t_{ih(RXD)}$	Receive data hold time	1	-	-	ns
$t_{su(DV)}$	Data valid setup time	4	-	-	ns
$t_{ih(DV)}$	Data valid hold time	0	-	-	ns
$t_{su(ER)}$	Error setup time	3.5	-	-	ns
$t_{ih(ER)}$	Error hold time	0	-	-	ns
$t_{d(TXEN)}$	Transmit enable valid delay time	-	11	14	ns
$t_{d(TXD)}$	Transmit data valid delay time	-	11	14	ns

CAN (controller area network) interface

Refer to *Section 6.3.16: I/O port characteristics* for more details on the input/output alternate function characteristics (CANTX and CANRX).

6.3.20 12-bit ADC characteristics

Unless otherwise specified, the parameters given in *Table 66* are derived from tests performed under the ambient temperature, f_{PCLK2} frequency and V_{DDA} supply voltage conditions summarized in *Table 14*.

Table 66. ADC characteristics

Symbol	Parameter	Conditions	Min	Typ	Max	Unit
V_{DDA}	Power supply	-	1.8(1)	-	3.6	V
V_{REF+}	Positive reference voltage	-	1.8(1)(2)	-	V_{DDA}	V
f_{ADC}	ADC clock frequency	V_{DDA} = 1.8(1) to 2.4 V	0.6	-	15	MHz
		V_{DDA} = 2.4 to 3.6 V	0.6	-	30	MHz
f_{TRIG}(3)	External trigger frequency	f_{ADC} = 30 MHz with 12-bit resolution	-	-	1764	kHz
		-	-	-	17	$1/f_{ADC}$
V_{AIN}	Conversion voltage range(4)	-	0 (V_{SSA} or V_{REF-} tied to ground)	-	V_{REF+}	V
R_{AIN}(3)	External input impedance	See *Equation 1* for details	-	-	50	kΩ
R_{ADC}(3)(5)	Sampling switch resistance	-	1.5	-	6	kΩ
C_{ADC}(3)	Internal sample and hold capacitor	-	-	4	-	pF
t_{lat}(3)	Injection trigger conversion latency	f_{ADC} = 30 MHz	-	-	0.100	µs
		-	-	-	3(6)	$1/f_{ADC}$
t_{latr}(3)	Regular trigger conversion latency	f_{ADC} = 30 MHz	-	-	0.067	µs
		-	-	-	2(6)	$1/f_{ADC}$
t_S(3)	Sampling time	f_{ADC} = 30 MHz	0.100	-	16	µs
		-	3	-	480	$1/f_{ADC}$
t_{STAB}(3)	Power-up time	-	-	2	3	µs
t_{CONV}(3)	Total conversion time (including sampling time)	f_{ADC} = 30 MHz 12-bit resolution	0.5	-	16.40	µs
		f_{ADC} = 30 MHz 10-bit resolution	0.43	-	16.34	µs
		f_{ADC} = 30 MHz 8-bit resolution	0.37	-	16.27	µs
		f_{ADC} = 30 MHz 6-bit resolution	0.3	-	16.20	µs
		9 to 492 (t_S for sampling +n-bit resolution for successive approximation)				$1/f_{ADC}$

Table 66. ADC characteristics (continued)

Symbol	Parameter	Conditions	Min	Typ	Max	Unit
f_S(3)	Sampling rate (f_{ADC} = 30 MHz)	12-bit resolution Single ADC	-	-	2	Msps
		12-bit resolution Interleave Dual ADC mode	-	-	3.75	Msps
		12-bit resolution Interleave Triple ADC mode	-	-	6	Msps
I_{VREF+}(3)	ADC V_{REF} DC current consumption in conversion mode	-	-	300	500	µA
I_{VDDA}(3)	ADC VDDA DC current consumption in conversion mode	-	-	1.6	1.8	mA

1. On devices in WLCSP64+2 package, if IRROFF is set to V_{DD}, the supply voltage can drop to 1.7 V when the device operates in the 0 to 70 °C temperature range using an external power supply supervisor (see *Section 3.16*).
2. It is recommended to maintain the voltage difference between V_{REF+} and V_{DDA} below 1.8 V.
3. Guaranteed by characterization results, not tested in production.
4. V_{REF+} is internally connected to V_{DDA} and V_{REF-} is internally connected to V_{SSA}.
5. R_{ADC} maximum value is given for V_{DD}=1.8 V, and minimum value for V_{DD}=3.3 V.
6. For external triggers, a delay of $1/f_{PCLK2}$ must be added to the latency specified in *Table 66*.

Equation 1: R_{AIN} max formula

$$R_{AIN} = \frac{(k-0.5)}{f_{ADC} \times C_{ADC} \times \ln(2^{N+2})} - R_{ADC}$$

The formula above (*Equation 1*) is used to determine the maximum external impedance allowed for an error below 1/4 of LSB. N = 12 (from 12-bit resolution) and k is the number of sampling periods defined in the ADC_SMPR1 register.

Table 67. ADC accuracy (1)

Symbol	Parameter	Test conditions	Typ	Max(2)	Unit
ET	Total unadjusted error	f_{PCLK2} = 60 MHz, f_{ADC} = 30 MHz, R_{AIN} < 10 kΩ, V_{DDA} = 1.8(3) to 3.6 V	±2	±5	LSB
EO	Offset error		±1.5	±2.5	
EG	Gain error		±1.5	±3	
ED	Differential linearity error		±1	±2	
EL	Integral linearity error		±1.5	±3	

1. Better performance could be achieved in restricted V_{DD}, frequency and temperature ranges.
2. Guaranteed by characterization results, not tested in production.
3. On devices in WLCSP64+2 package, if IRROFF is set to V_{DD}, the supply voltage can drop to 1.7 V when the device operates in the 0 to 70 °C temperature range using an external power supply supervisor (see *Section 3.16*).

Note: ADC accuracy vs. negative injection current: injecting a negative current on any analog input pins should be avoided as this significantly reduces the accuracy of the conversion

being performed on another analog input. It is recommended to add a Schottky diode (pin to ground) to analog pins which may potentially inject negative currents.

Any positive injection current within the limits specified for $I_{INJ(PIN)}$ and $\Sigma I_{INJ(PIN)}$ in *Section 6.3.16* does not affect the ADC accuracy.

Figure 52. ADC accuracy characteristics

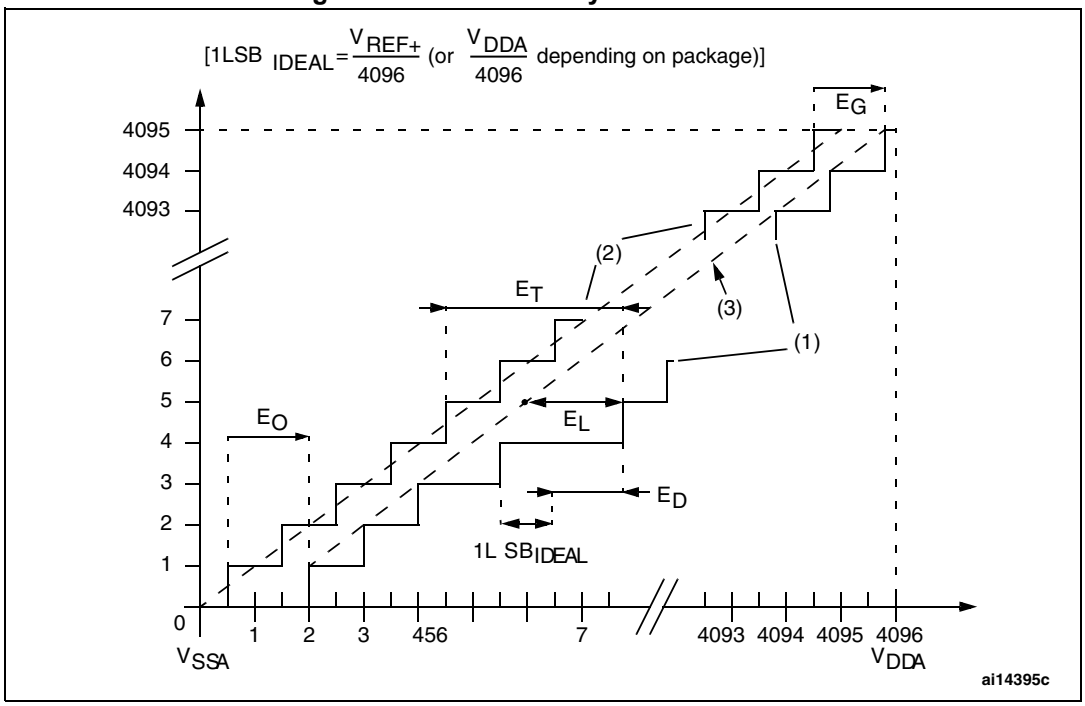

1. Example of an actual transfer curve.
2. Ideal transfer curve.
3. End point correlation line.
4. E_T = Total Unadjusted Error: maximum deviation between the actual and the ideal transfer curves.
   EO = Offset Error: deviation between the first actual transition and the first ideal one.
   EG = Gain Error: deviation between the last ideal transition and the last actual one.
   ED = Differential Linearity Error: maximum deviation between actual steps and the ideal one.
   EL = Integral Linearity Error: maximum deviation between any actual transition and the end point correlation line.

Figure 53. Typical connection diagram using the ADC

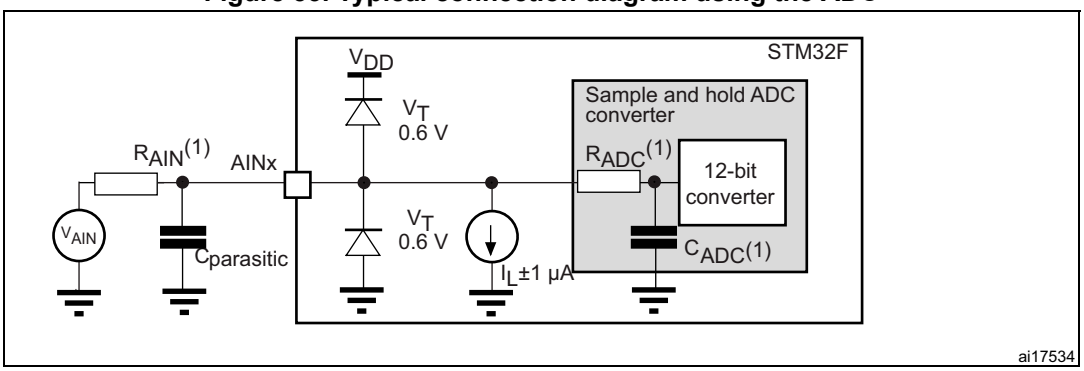

1. Refer to *Table 66* for the values of R_{AIN}, R_{ADC} and C_{ADC}.
2. $C_{parasitic}$ represents the capacitance of the PCB (dependent on soldering and PCB layout quality) plus the pad capacitance (roughly 7 pF). A high $C_{parasitic}$ value downgrades conversion accuracy. To remedy this, f_{ADC} should be reduced.

General PCB design guidelines

Power supply decoupling should be performed as shown in *Figure 54* or *Figure 55*, depending on whether V_{REF+} is connected to V_{DDA} or not. The 10 nF capacitors should be ceramic (good quality). They should be placed them as close as possible to the chip.

Figure 54. Power supply and reference decoupling (V_{REF+} not connected to V_{DDA})

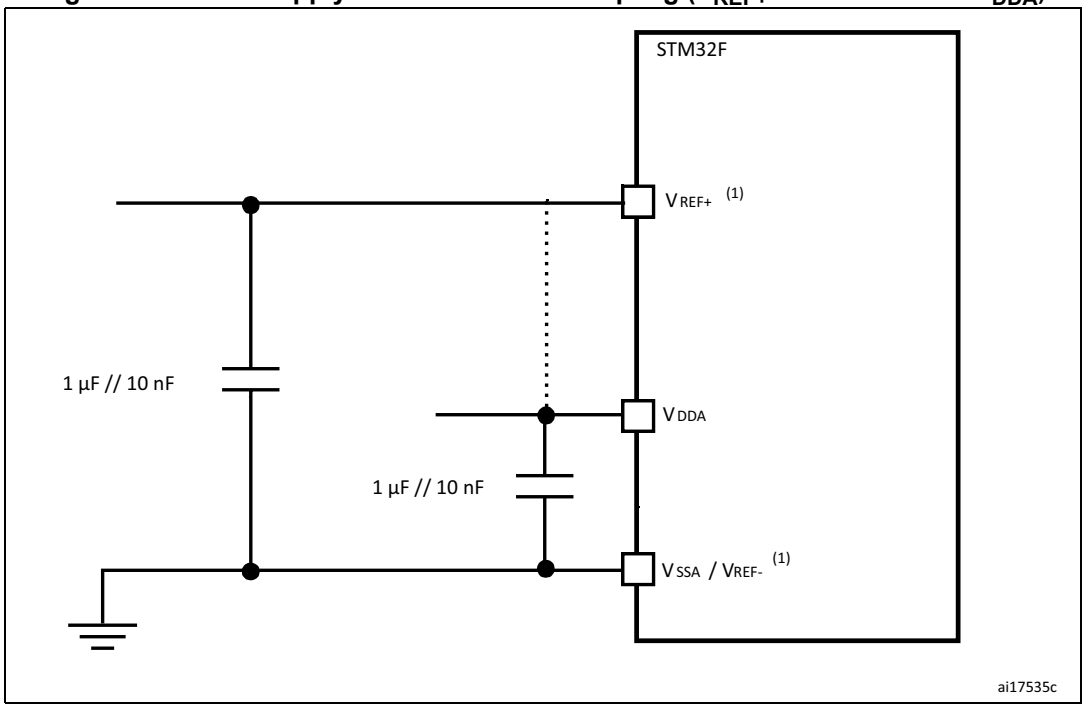

1. V_{REF+} and V_{REF-} inputs are both available on UFBGA176 package. V_{REF+} is also available on all packages except for LQFP64. When V_{REF+} and V_{REF-} are not available, they are internally connected to V_{DDA} and V_{SSA}.

Figure 55. Power supply and reference decoupling (V_{REF+} connected to V_{DDA})

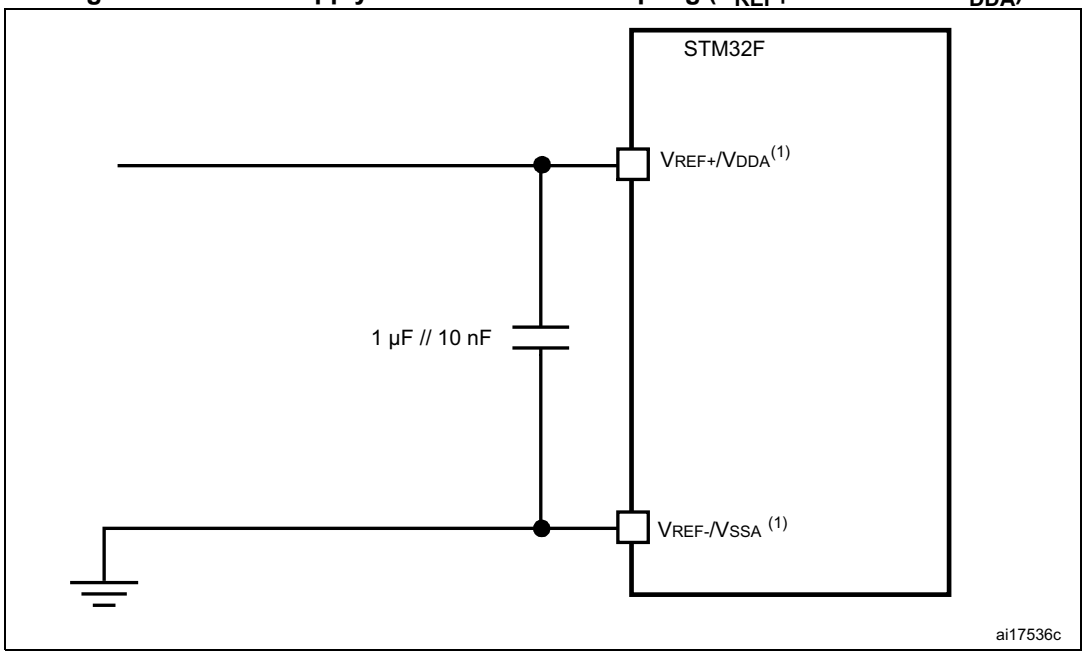

1. V_{REF+} and V_{REF-} inputs are both available on UFBGA176 package. V_{REF+} is also available on all packages except for LQFP64. When V_{REF+} and V_{REF-} are not available, they are internally connected to V_{DDA} and V_{SSA}.

6.3.21 DAC electrical characteristics

Table 68. DAC characteristics

Symbol	Parameter	Min	Typ	Max	Unit	Comments
V_{DDA}	Analog supply voltage	1.8(1)	-	3.6	V	-
V_{REF+}	Reference supply voltage	1.8(1)	-	3.6	V	$V_{REF+} \leq V_{DDA}$
V_{SSA}	Ground	0	-	0	V	-
R_{LOAD}(2)	Resistive load with buffer ON	5	-	-	kΩ	-
R_O(2)	Impedance output with buffer OFF	-	-	15	kΩ	When the buffer is OFF, the Minimum resistive load between DAC_OUT and V_{SS} to have a 1% accuracy is 1.5 MΩ
C_{LOAD}(2)	Capacitive load	-	-	50	pF	Maximum capacitive load at DAC_OUT pin (when the buffer is ON).
DAC_OUT min(2)	Lower DAC_OUT voltage with buffer ON	0.2	-	-	V	It gives the maximum output excursion of the DAC. It corresponds to 12-bit input code (0x0E0) to (0xF1C) at V_{REF+} = 3.6 V and (0x1C7) to (0xE38) at V_{REF+} = 1.8 V
DAC_OUT max(2)	Higher DAC_OUT voltage with buffer ON	-	-	V_{DDA} – 0.2	V	

Table 68. DAC characteristics (continued)

Symbol	Parameter	Min	Typ	Max	Unit	Comments
DAC_OUT min(2)	Lower DAC_OUT voltage with buffer OFF	-	0.5	-	mV	It gives the maximum output excursion of the DAC.
DAC_OUT max(2)	Higher DAC_OUT voltage with buffer OFF	-	-	V_{REF+} – 1LSB	V	
I_{VREF+}(4)	DAC DC V_{REF} current consumption in quiescent mode (Standby mode)	-	170	240	µA	With no load, worst code (0x800) at V_{REF+} = 3.6 V in terms of DC consumption on the inputs
		-	50	75		With no load, worst code (0xF1C) at V_{REF+} = 3.6 V in terms of DC consumption on the inputs
I_{DDA}(4)	DAC DC V_{DDA} current consumption in quiescent mode(3)	-	280	380	µA	With no load, middle code (0x800) on the inputs
		-	475	625	µA	With no load, worst code (0xF1C) at V_{REF+} = 3.6 V in terms of DC consumption on the inputs
DNL(4)	Differential non linearity Difference between two consecutive code-1LSB)	-	-	±0.5	LSB	Given for the DAC in 10-bit configuration.
		-	-	±2	LSB	Given for the DAC in 12-bit configuration.
INL(4)	Integral non linearity (difference between measured value at Code i and the value at Code i on a line drawn between Code 0 and last Code 1023)	-	-	±1	LSB	Given for the DAC in 10-bit configuration.
		-	-	±4	LSB	Given for the DAC in 12-bit configuration.
Offset(4)	Offset error (difference between measured value at Code (0x800) and the ideal value = $V_{REF+}/2$)	-	-	±10	mV	-
		-	-	±3	LSB	Given for the DAC in 10-bit at V_{REF+} = 3.6 V
		-	-	±12	LSB	Given for the DAC in 12-bit at V_{REF+} = 3.6 V
Gain error(4)	Gain error	-	-	±0.5	%	Given for the DAC in 12-bit configuration
$t_{SETTLING}$(4)	Settling time (full scale: for a 10-bit input code transition between the lowest and the highest input codes when DAC_OUT reaches final value ±4LSB	-	3	6	µs	$C_{LOAD} \leq 50$ pF, $R_{LOAD} \geq 5$ kΩ
THD(4)	Total Harmonic Distortion Buffer ON	-	-	-	dB	$C_{LOAD} \leq 50$ pF, $R_{LOAD} \geq 5$ kΩ

Table 68. DAC characteristics (continued)

Symbol	Parameter	Min	Typ	Max	Unit	Comments
Update rate(2)	Max frequency for a correct DAC_OUT change when small variation in the input code (from code i to i+1LSB)	-	-	1	MS/s	$C_{LOAD} \leq 50$ pF, $R_{LOAD} \geq 5$ kΩ
t_{WAKEUP}(4)	Wakeup time from off state (Setting the ENx bit in the DAC Control register)	-	6.5	10	µs	$C_{LOAD} \leq 50$ pF, $R_{LOAD} \geq 5$ kΩ input code between lowest and highest possible ones.
PSRR+ (2)	Power supply rejection ratio (to V_{DDA}) (static DC measurement)	-	–67	–40	dB	No R_{LOAD}, C_{LOAD} = 50 pF

1. On devices in WLCSP64+2 package, if IRROFF is set to V_{DD}, the supply voltage can drop to 1.7 V when the device operates in the 0 to 70 °C temperature range using an external power supply supervisor (see *Section 3.16*).
2. Guaranteed by design, not tested in production.
3. The quiescent mode corresponds to a state where the DAC maintains a stable output level to ensure that no dynamic consumption occurs.
4. Guaranteed by characterization results, not tested in production.

Figure 56. 12-bit buffered/non-buffered DAC

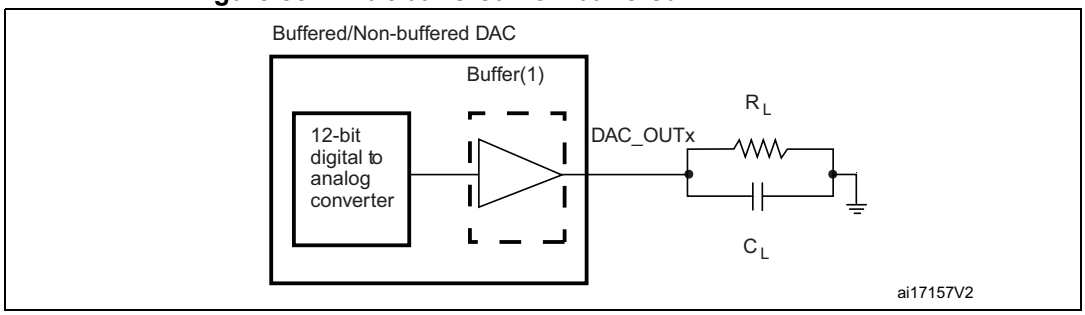

1. The DAC integrates an output buffer that can be used to reduce the output impedance and to drive external loads directly, without the use of an external operational amplifier. The buffer can be bypassed by configuring the BOFFx bit in the DAC_CR register.

6.3.22 Temperature sensor characteristics

Table 69. Temperature sensor characteristics

Symbol	Parameter	Min	Typ	Max	Unit
T_L(1)	V_{SENSE} linearity with temperature	-	±1	±2	°C
Avg_Slope(1)	Average slope	-	2.5	-	mV/°C
V_{25}(1)	Voltage at 25 °C	-	0.76	-	V
t_{START}(2)	Startup time	-	6	10	µs
T_{S_temp}(2)	ADC sampling time when reading the temperature (1 °C accuracy)	10	-	-	µs

1. Guaranteed by characterization results, not tested in production.
2. Guaranteed by design, not tested in production.

6.3.23 V_{BAT} monitoring characteristics

Table 70. V_{BAT} monitoring characteristics

Symbol	Parameter	Min	Typ	Max	Unit
R	Resistor bridge for V_{BAT}	-	50	-	KΩ
Q	Ratio on V_{BAT} measurement	-	2	-	
Er(1)	Error on Q	–1	-	+1	%
T_{S_vbat}(2)(2)	ADC sampling time when reading the V_{BAT} (1 mV accuracy)	5	-	-	µs

1. Guaranteed by design, not tested in production.
2. Shortest sampling time can be determined in the application by multiple iterations.

6.3.24 Embedded reference voltage

The parameters given in *Table 71* are derived from tests performed under ambient temperature and V_{DD} supply voltage conditions summarized in *Table 14*.

Table 71. Embedded internal reference voltage

Symbol	Parameter	Conditions	Min	Typ	Max	Unit
V_{REFINT}	Internal reference voltage	–40 °C < T_A < +105 °C	1.18	1.21	1.24	V
$T_{S_vrefint}$(1)	ADC sampling time when reading the internal reference voltage	-	10	-	-	µs
V_{REFINT_s}(2)	Internal reference voltage spread over the temperature range	V_{DD} = 3 V	-	3	5	mV
T_{Coeff}(2)	Temperature coefficient	-	-	30	50	ppm/°C
t_{START}(2)	Startup time	-	-	6	10	µs

1. Shortest sampling time can be determined in the application by multiple iterations.
2. Guaranteed by design, not tested in production.

6.3.25 FSMC characteristics

Asynchronous waveforms and timings

Figure 57 through *Figure 60* represent asynchronous waveforms and *Table 72* through *Table 75* provide the corresponding timings. The results shown in these tables are obtained with the following FSMC configuration:

- AddressSetupTime = 1
- AddressHoldTime = 1
- DataSetupTime = 1
- BusTurnAroundDuration = 0x0

In all timing tables, the T_{HCLK} is the HCLK clock period.

Figure 57. Asynchronous non-multiplexed SRAM/PSRAM/NOR read waveforms

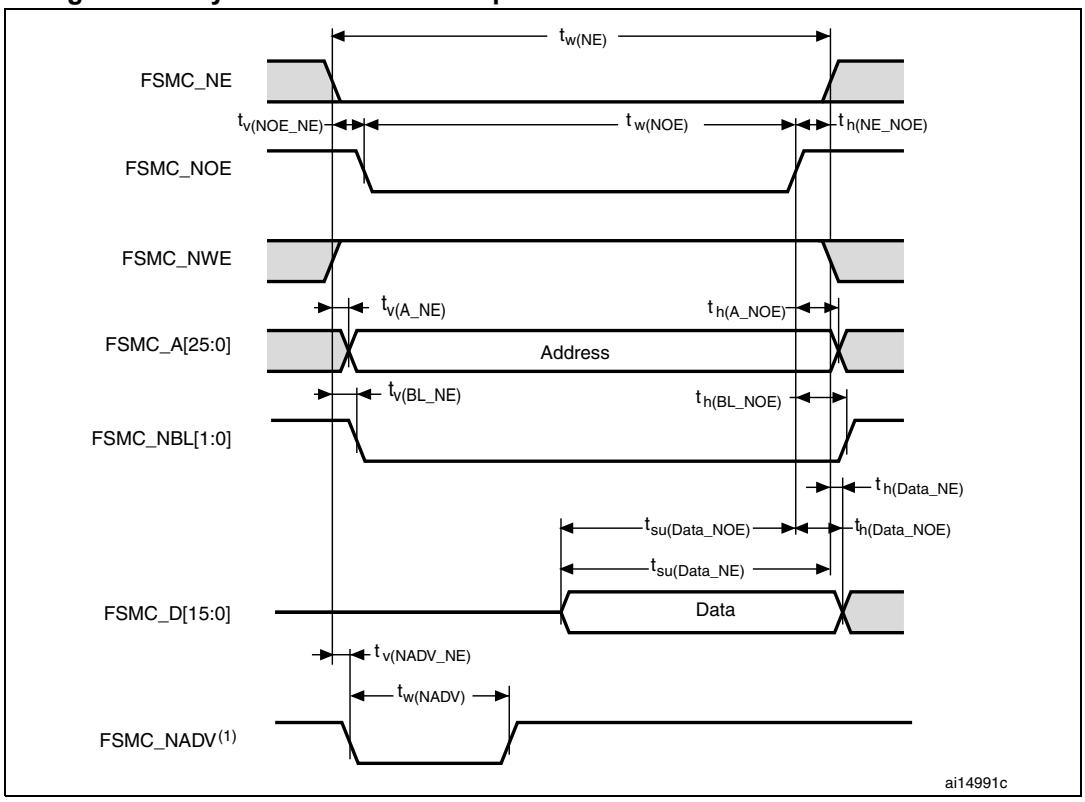

1. Mode 2/B, C and D only. In Mode 1, FSMC_NADV is not used.

Table 72. Asynchronous non-multiplexed SRAM/PSRAM/NOR read timings(1)(2)

Symbol	Parameter	Min	Max	Unit
$t_{w(NE)}$	FSMC_NE low time	$2T_{HCLK}$– 0.5	$2T_{HCLK}$+0.5	ns
$t_{v(NOE_NE)}$	FSMC_NEx low to FSMC_NOE low	0.5	2.5	ns
$t_{w(NOE)}$	FSMC_NOE low time	$2T_{HCLK}$- 1	$2T_{HCLK}$+ 0.5	ns
$t_{h(NE_NOE)}$	FSMC_NOE high to FSMC_NE high hold time	0	-	ns
$t_{v(A_NE)}$	FSMC_NEx low to FSMC_A valid	-	4	ns
$t_{h(A_NOE)}$	Address hold time after FSMC_NOE high	0	-	ns
$t_{v(BL_NE)}$	FSMC_NEx low to FSMC_BL valid	-	0.5	ns
$t_{h(BL_NOE)}$	FSMC_BL hold time after FSMC_NOE high	0	-	ns
$t_{su(Data_NE)}$	Data to FSMC_NEx high setup time	T_{HCLK}+ 0.5	-	ns
$t_{su(Data_NOE)}$	Data to FSMC_NOEx high setup time	T_{HCLK}+ 2.5	-	ns
$t_{h(Data_NOE)}$	Data hold time after FSMC_NOE high	0	-	ns
$t_{h(Data_NE)}$	Data hold time after FSMC_NEx high	0	-	ns
$t_{v(NADV_NE)}$	FSMC_NEx low to FSMC_NADV low	-	2.5	ns
$t_{w(NADV)}$)	FSMC_NADV low time	-	T_{HCLK}– 0.5	ns

1. C_L = 30 pF.
2. Guaranteed by characterization results, not tested in production.

Figure 58. Asynchronous non-multiplexed SRAM/PSRAM/NOR write waveforms

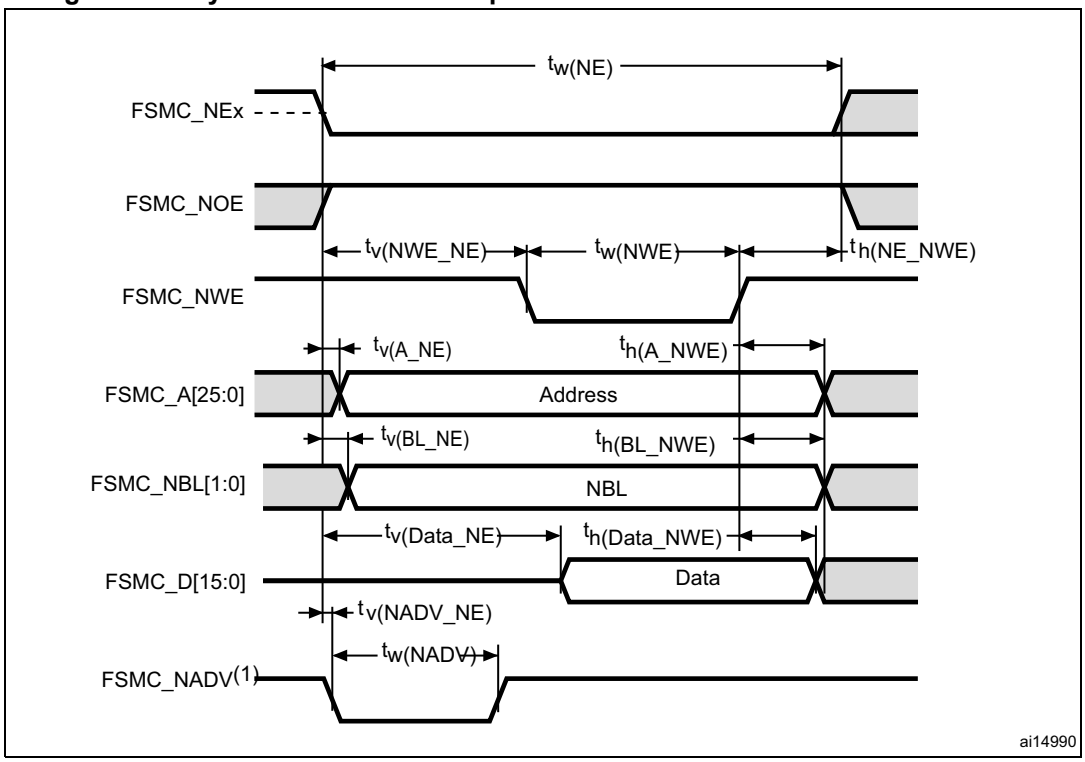

1. Mode 2/B, C and D only. In Mode 1, FSMC_NADV is not used.

Table 73. Asynchronous non-multiplexed SRAM/PSRAM/NOR write timings(1)(2)

Symbol	Parameter	Min	Max	Unit
$t_{w(NE)}$	FSMC_NE low time	$3T_{HCLK}$	$3T_{HCLK}+4$	ns
$t_{v(NWE_NE)}$	FSMC_NEx low to FSMC_NWE low	$T_{HCLK}-0.5$	$T_{HCLK}+0.5$	ns
$t_{w(NWE)}$	FSMC_NWE low time	$T_{HCLK}-0.5$	$T_{HCLK}+3$	ns
$t_{h(NE_NWE)}$	FSMC_NWE high to FSMC_NE high hold time	T_{HCLK}	-	ns
$t_{v(A_NE)}$	FSMC_NEx low to FSMC_A valid	-	0	ns
$t_{h(A_NWE)}$	Address hold time after FSMC_NWE high	$T_{HCLK}-3$	-	ns
$t_{v(BL_NE)}$	FSMC_NEx low to FSMC_BL valid	-	0.5	ns
$t_{h(BL_NWE)}$	FSMC_BL hold time after FSMC_NWE high	$T_{HCLK}-1$	-	ns
$t_{v(Data_NE)}$	Data to FSMC_NEx low to Data valid	-	$T_{HCLK}+5$	ns
$t_{h(Data_NWE)}$	Data hold time after FSMC_NWE high	$T_{HCLK}+0.5$	-	ns
$t_{v(NADV_NE)}$	FSMC_NEx low to FSMC_NADV low	-	2	ns
$t_{w(NADV)}$	FSMC_NADV low time	-	$T_{HCLK}+1.5$	ns

1. C_L = 30 pF.
2. Guaranteed by characterization results, not tested in production.

Figure 59. Asynchronous multiplexed PSRAM/NOR read waveforms

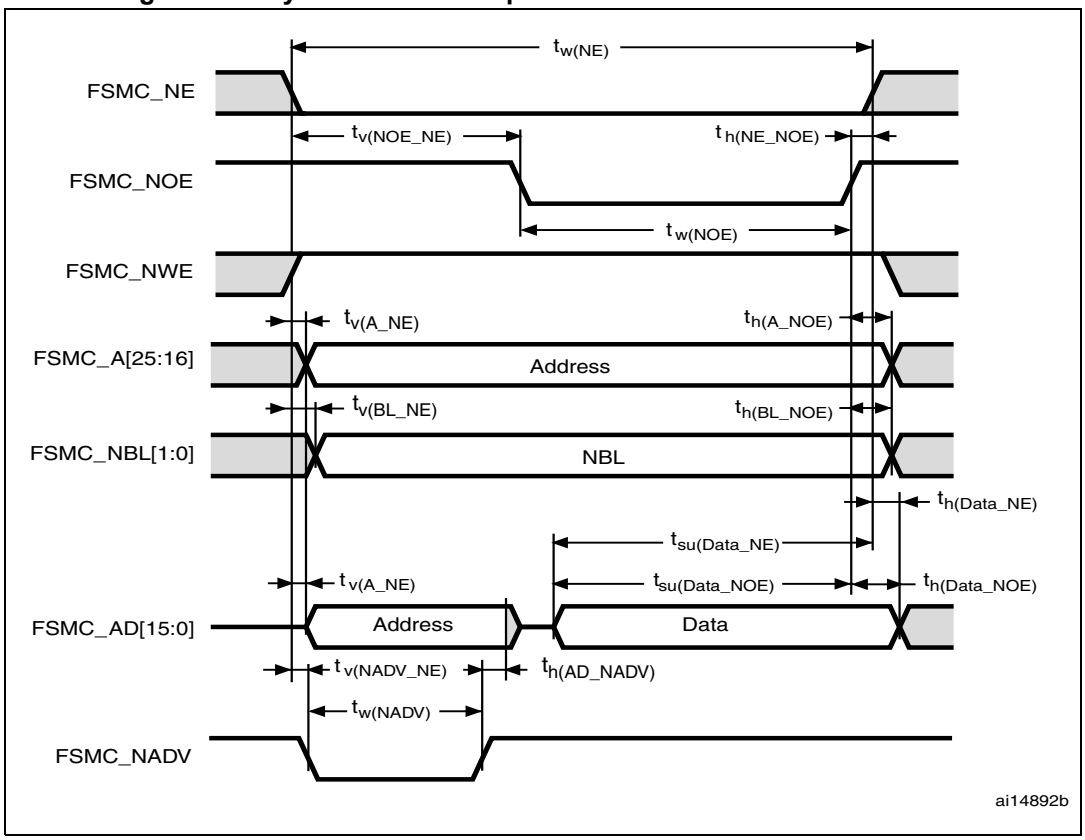

Table 74. Asynchronous multiplexed PSRAM/NOR read timings(1)(2)

Symbol	Parameter	Min	Max	Unit
$t_{w(NE)}$	FSMC_NE low time	$3T_{HCLK}$-1	$3T_{HCLK}$+1	ns
$t_{v(NOE_NE)}$	FSMC_NEx low to FSMC_NOE low	$2T_{HCLK}$	$2T_{HCLK}$+0.5	ns
$t_{w(NOE)}$	FSMC_NOE low time	T_{HCLK}-1	T_{HCLK}+1	ns
$t_{h(NE_NOE)}$	FSMC_NOE high to FSMC_NE high hold time	0	-	ns
$t_{v(A_NE)}$	FSMC_NEx low to FSMC_A valid	-	2	ns
$t_{v(NADV_NE)}$	FSMC_NEx low to FSMC_NADV low	1	2.5	ns
$t_{w(NADV)}$	FSMC_NADV low time	T_{HCLK}– 1.5	T_{HCLK}	ns
$t_{h(AD_NADV)}$	FSMC_AD(adress) valid hold time after FSMC_NADV high)	T_{HCLK}	-	ns
$t_{h(A_NOE)}$	Address hold time after FSMC_NOE high	T_{HCLK}	-	ns
$t_{h(BL_NOE)}$	FSMC_BL time after FSMC_NOE high	0	-	ns
$t_{v(BL_NE)}$	FSMC_NEx low to FSMC_BL valid	-	1	ns
$t_{su(Data_NE)}$	Data to FSMC_NEx high setup time	T_{HCLK}+ 2	-	ns
$t_{su(Data_NOE)}$	Data to FSMC_NOE high setup time	T_{HCLK}+ 3	-	ns

Table 74. Asynchronous multiplexed PSRAM/NOR read timings(1)(2) (continued)

Symbol	Parameter	Min	Max	Unit
$t_{h(Data_NE)}$	Data hold time after FSMC_NEx high	0	-	ns
$t_{h(Data_NOE)}$	Data hold time after FSMC_NOE high	0	-	ns

1. C_L = 30 pF.
2. Guaranteed by characterization results, not tested in production.

Figure 60. Asynchronous multiplexed PSRAM/NOR write waveforms

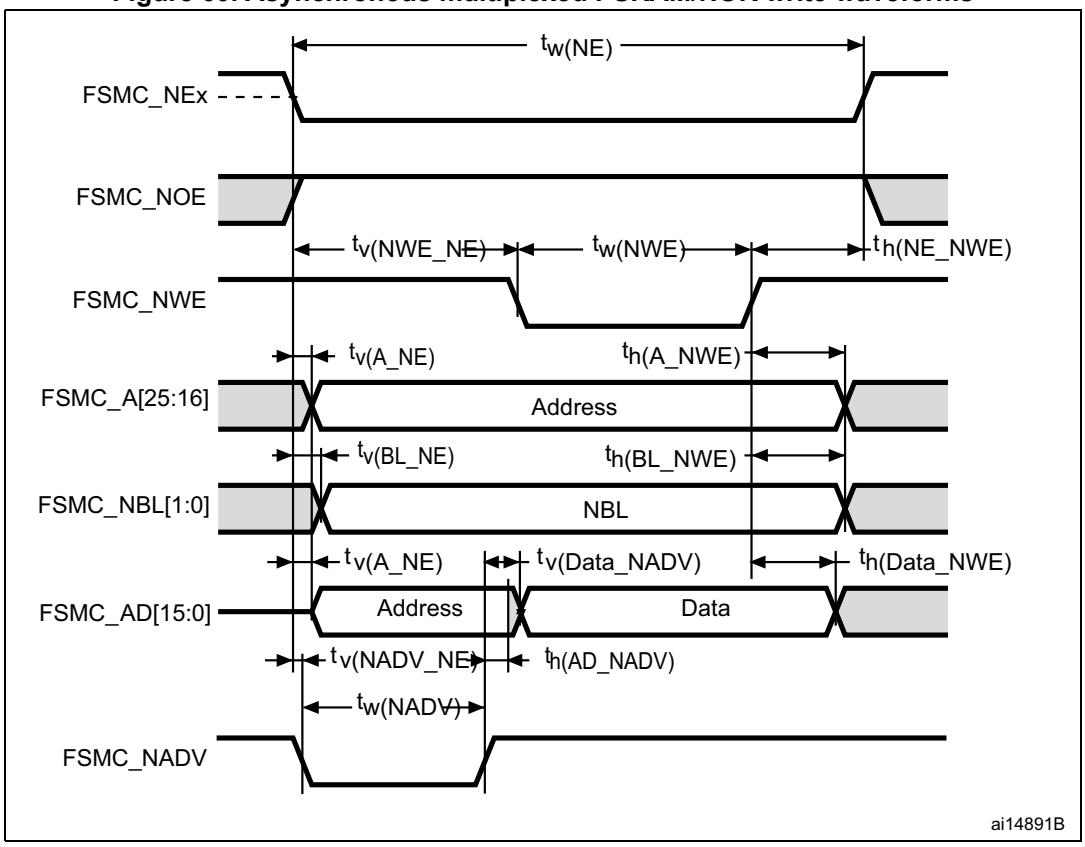

Table 75. Asynchronous multiplexed PSRAM/NOR write timings(1)(2)

Symbol	Parameter	Min	Max	Unit
$t_{w(NE)}$	FSMC_NE low time	$4T_{HCLK}$-1	$4T_{HCLK}$+1	ns
$t_{v(NWE_NE)}$	FSMC_NEx low to FSMC_NWE low	T_{HCLK}- 1	T_{HCLK}	ns
$t_{w(NWE)}$	FSMC_NWE low tim e	$2T_{HCLK}$	$2T_{HCLK}$+1	ns
$t_{h(NE_NWE)}$	FSMC_NWE high to FSMC_NE high hold time	T_{HCLK}- 1	-	ns
$t_{v(A_NE)}$	FSMC_NEx low to FSMC_A valid	-	0	ns
$t_{v(NADV_NE)}$	FSMC_NEx low to FSMC_NADV low	1	2	ns
$t_{w(NADV)}$	FSMC_NADV low time	T_{HCLK}– 2	T_{HCLK}+ 2	ns
$t_{h(AD_NADV)}$	FSMC_AD(adress) valid hold time after FSMC_NADV high)	T_{HCLK}	-	ns

Table 75. Asynchronous multiplexed PSRAM/NOR write timings(1)(2) (continued)

Symbol	Parameter	Min	Max	Unit
$t_{h(A_NWE)}$	Address hold time after FSMC_NWE high	T_{HCLK}– 0.5	-	ns
$t_{h(BL_NWE)}$	FSMC_BL hold time after FSMC_NWE high	T_{HCLK}- 1	-	ns
$t_{v(BL_NE)}$	FSMC_NEx low to FSMC_BL valid	-	0.5	ns
$t_{v(Data_NADV)}$	FSMC_NADV high to Data valid	-	T_{HCLK}+2	ns
$t_{h(Data_NWE)}$	Data hold time after FSMC_NWE high	T_{HCLK}– 0.5	-	ns

1. C_L = 30 pF.
2. Guaranteed by characterization results, not tested in production.

Synchronous waveforms and timings

Figure 61 through *Figure 64* represent synchronous waveforms, and *Table 77* through *Table 79* provide the corresponding timings. The results shown in these tables are obtained with the following FSMC configuration:

- BurstAccessMode = FSMC_BurstAccessMode_Enable;
- MemoryType = FSMC_MemoryType_CRAM;
- WriteBurst = FSMC_WriteBurst_Enable;
- CLKDivision = 1; (0 is not supported, see the STM32F20xxx/21xxx reference manual)
- DataLatency = 1 for NOR Flash; DataLatency = 0 for PSRAM

In all timing tables, the T_{HCLK} is the HCLK clock period.

Figure 61. Synchronous multiplexed NOR/PSRAM read timings

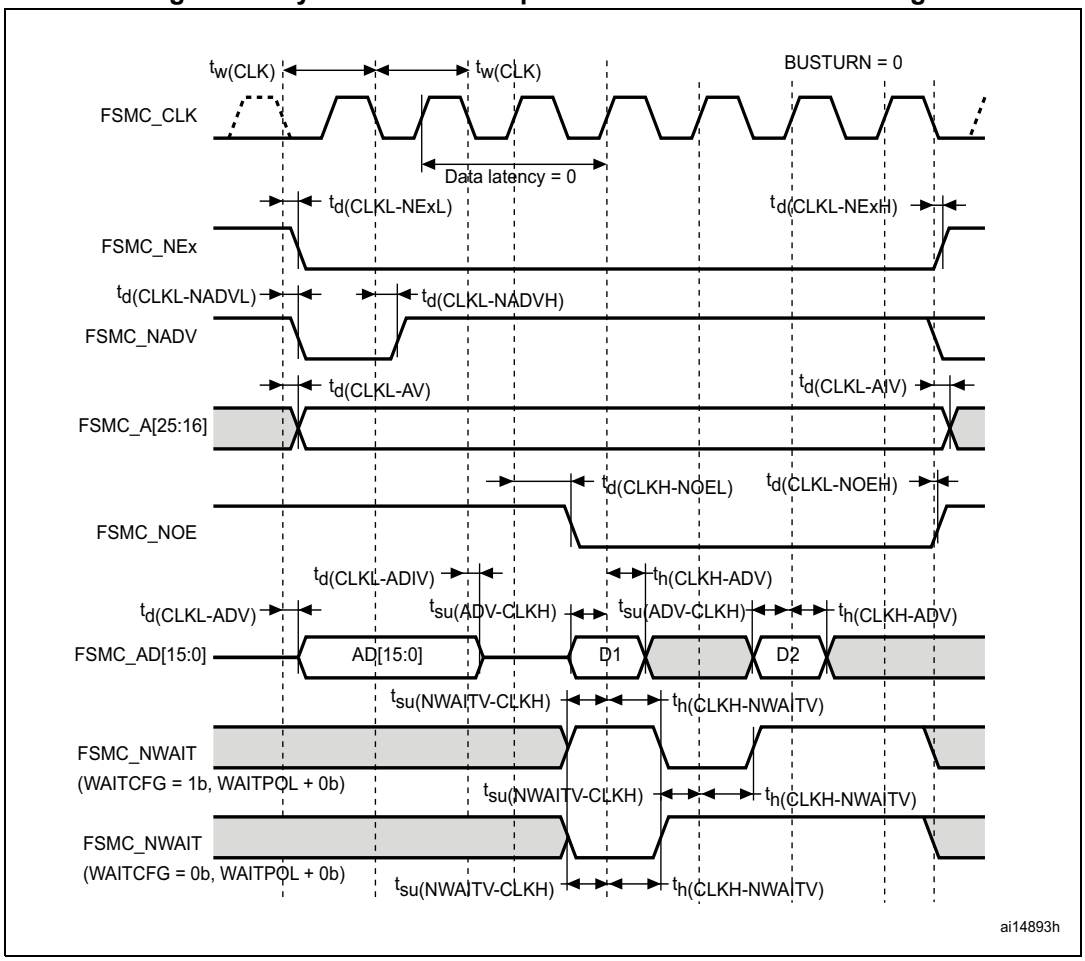

Table 76. Synchronous multiplexed NOR/PSRAM read timings(1)(2)

Symbol	Parameter	Min	Max	Unit
$t_{w(CLK)}$	FSMC_CLK period	$2T_{HCLK}$	-	ns
$t_{d(CLKL-NExL)}$	FSMC_CLK low to FSMC_NEx low (x=0..2)	-	0	ns
$t_{d(CLKL-NExH)}$	FSMC_CLK low to FSMC_NEx high (x= 0…2)	1	-	ns
$t_{d(CLKL-NADVL)}$	FSMC_CLK low to FSMC_NADV low	-	1.5	ns
$t_{d(CLKL-NADVH)}$	FSMC_CLK low to FSMC_NADV high	2.5	-	ns
$t_{d(CLKL-AV)}$	FSMC_CLK low to FSMC_Ax valid (x=16…25)	-	0	ns
$t_{d(CLKL-AIV)}$	FSMC_CLK low to FSMC_Ax invalid (x=16…25)	0	-	ns
$t_{d(CLKH-NOEL)}$	FSMC_CLK high to FSMC_NOE low	-	1	ns
$t_{d(CLKL-NOEH)}$	FSMC_CLK low to FSMC_NOE high	1	-	ns
$t_{d(CLKL-ADV)}$	FSMC_CLK low to FSMC_AD[15:0] valid	-	3	ns
$t_{d(CLKL-ADIV)}$	FSMC_CLK low to FSMC_AD[15:0] invalid	0	-	ns

Table 76. Synchronous multiplexed NOR/PSRAM read timings(1)(2) (continued)

Symbol	Parameter	Min	Max	Unit
$t_{su(ADV-CLKH)}$	FSMC_A/D[15:0] valid data before FSMC_CLK high	5	-	ns
$t_{h(CLKH-ADV)}$	FSMC_A/D[15:0] valid data after FSMC_CLK high	0	-	ns

1. C_L = 30 pF.
2. Guaranteed by characterization results, not tested in production.

Figure 62. Synchronous multiplexed PSRAM write timings

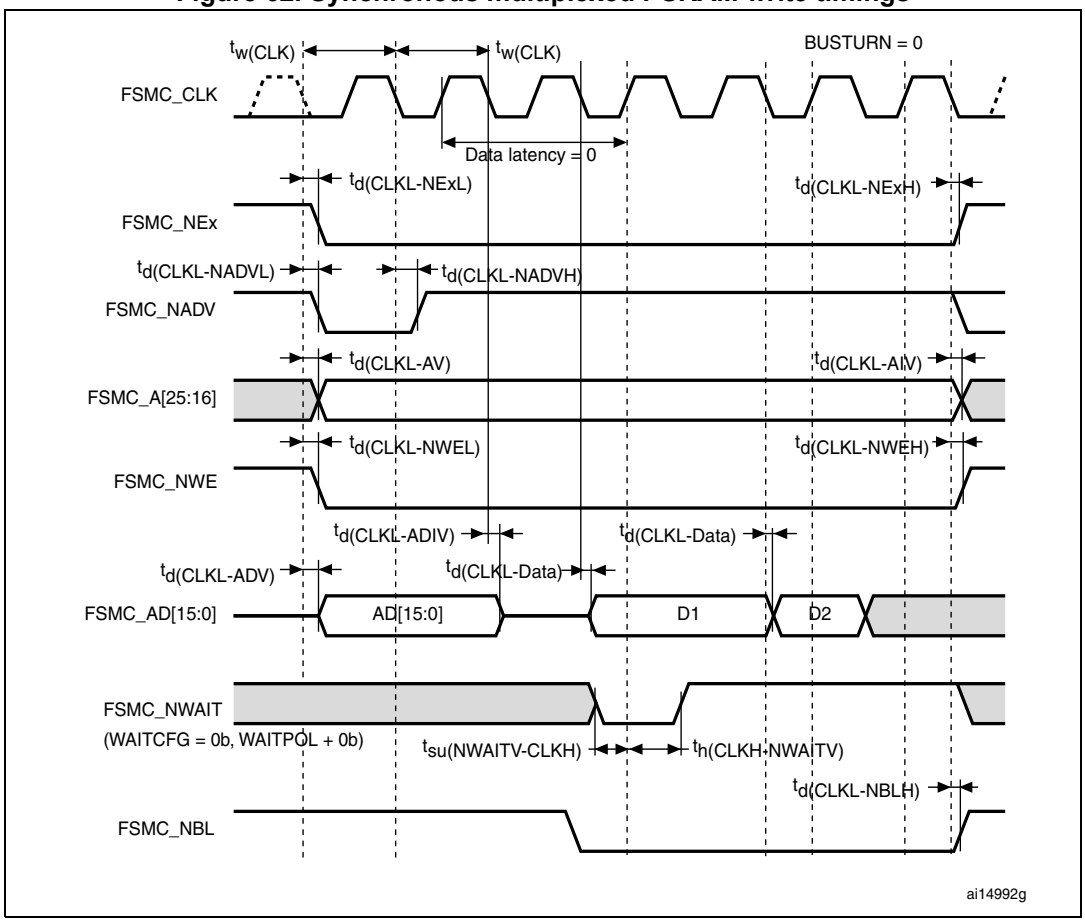

Table 77. Synchronous multiplexed PSRAM write timings(1)(2)

Symbol	Parameter	Min	Max	Unit
$t_{w(CLK)}$	FSMC_CLK period	$2T_{HCLK}$- 1	-	ns
$t_{d(CLKL-NExL)}$	FSMC_CLK low to FSMC_NEx low (x=0..2)	-	0	ns
$t_{d(CLKL-NExH)}$	FSMC_CLK low to FSMC_NEx high (x= 0…2)	2	-	ns
$t_{d(CLKL-NADVL)}$	FSMC_CLK low to FSMC_NADV low	-	2	ns
$t_{d(CLKL-NADVH)}$	FSMC_CLK low to FSMC_NADV high	3	-	ns
$t_{d(CLKL-AV)}$	FSMC_CLK low to FSMC_Ax valid (x=16…25)	-	0	ns
$t_{d(CLKL-AIV)}$	FSMC_CLK low to FSMC_Ax invalid (x=16…25)	7	-	ns

Table 77. Synchronous multiplexed PSRAM write timings(1)(2) (continued)

Symbol	Parameter	Min	Max	Unit
$t_{d(CLKL-NWEL)}$	FSMC_CLK low to FSMC_NWE low	-	1	ns
$t_{d(CLKL-NWEH)}$	FSMC_CLK low to FSMC_NWE high	0	-	ns
$t_{d(CLKL-ADIV)}$	FSMC_CLK low to FSMC_AD[15:0] invalid	0	-	ns
$t_{d(CLKL-DATA)}$	FSMC_A/D[15:0] valid data after FSMC_CLK low	-	2	ns
$t_{d(CLKL-NBLH)}$	FSMC_CLK low to FSMC_NBL high	0.5	-	ns

1. C_L = 30 pF.
2. Guaranteed by characterization results, not tested in production.

Figure 63. Synchronous non-multiplexed NOR/PSRAM read timings

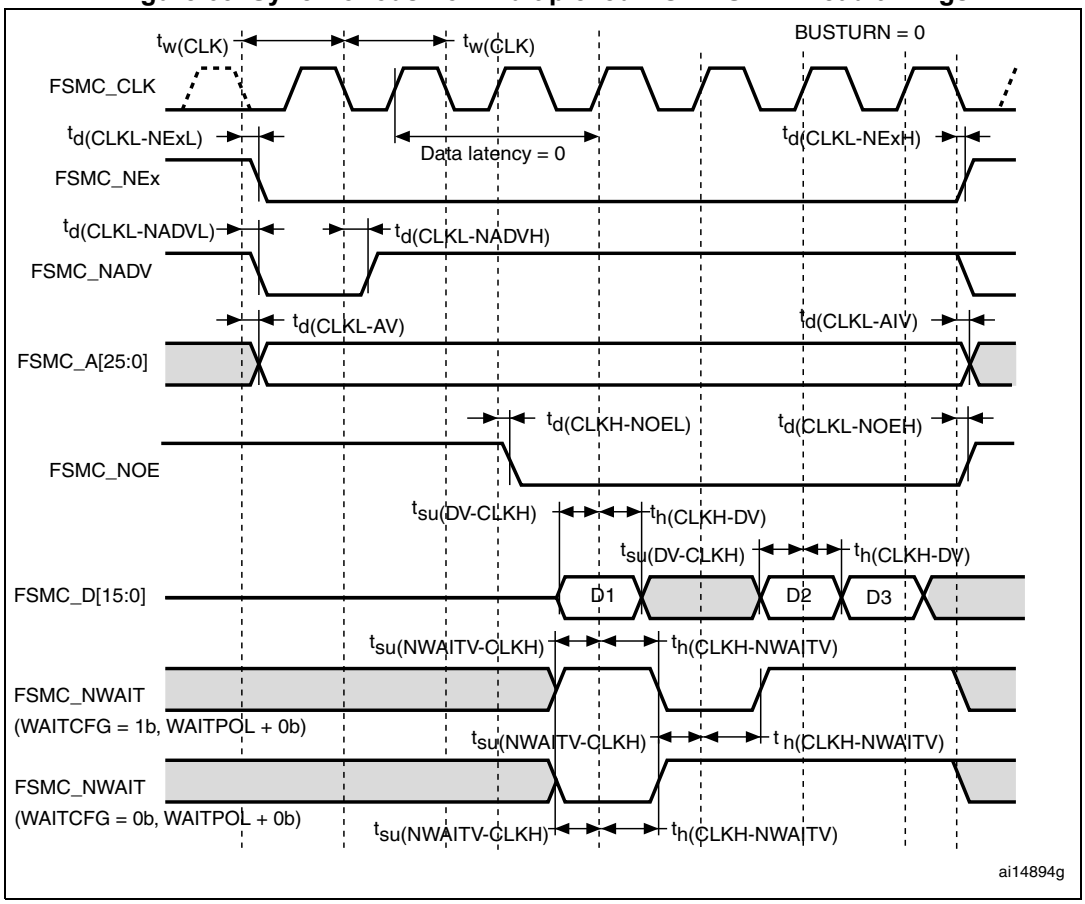

Table 78. Synchronous non-multiplexed NOR/PSRAM read timings(1)(2)

Symbol	Parameter	Min	Max	Unit
$t_{w(CLK)}$	FSMC_CLK period	$2T_{HCLK}$	-	ns
$t_{d(CLKL-NExL)}$	FSMC_CLK low to FSMC_NEx low (x=0..2)	-	0	ns
$t_{d(CLKL-NExH)}$	FSMC_CLK low to FSMC_NEx high (x= 0…2)	1	-	ns
$t_{d(CLKL-NADVL)}$	FSMC_CLK low to FSMC_NADV low	-	2.5	ns

Table 78. Synchronous non-multiplexed NOR/PSRAM read timings(1)(2) (continued)

Symbol	Parameter	Min	Max	Unit
$t_{d(CLKL-NADVH)}$	FSMC_CLK low to FSMC_NADV high	4	-	ns
$t_{d(CLKL-AV)}$	FSMC_CLK low to FSMC_Ax valid (x=16…25)	-	0	ns
$t_{d(CLKL-AIV)}$	FSMC_CLK low to FSMC_Ax invalid (x=16…25)	3	-	ns
$t_{d(CLKH-NOEL)}$	FSMC_CLK high to FSMC_NOE low	-	1	ns
$t_{d(CLKL-NOEH)}$	FSMC_CLK low to FSMC_NOE high	1.5	-	ns
$t_{su(DV-CLKH)}$	FSMC_D[15:0] valid data before FSMC_CLK high	8	-	ns
$t_{h(CLKH-DV)}$	FSMC_D[15:0] valid data after FSMC_CLK high	0	-	ns

1. C_L = 30 pF.
2. Guaranteed by characterization results, not tested in production.

Figure 64. Synchronous non-multiplexed PSRAM write timings

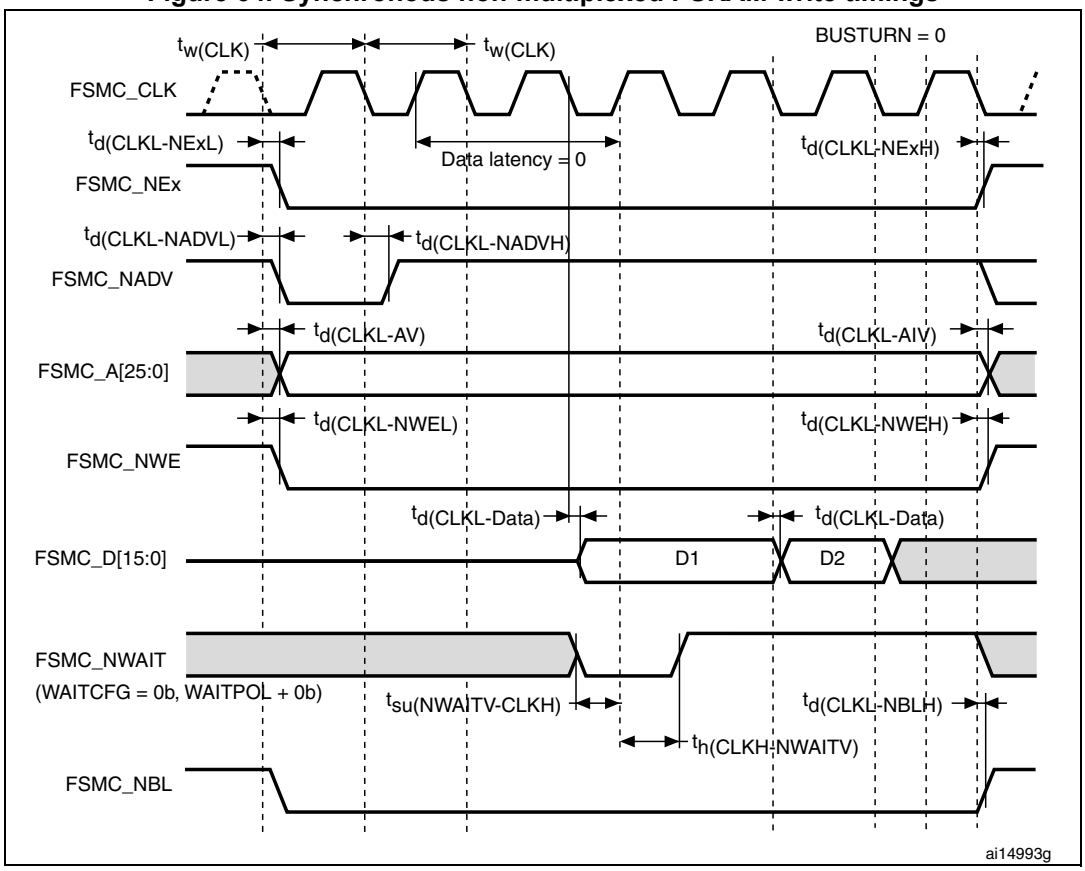

Table 79. Synchronous non-multiplexed PSRAM write timings(1)(2)

Symbol	Parameter	Min	Max	Unit
$t_{w(CLK)}$	FSMC_CLK period	$2T_{HCLK}$- 1	-	ns
$t_{d(CLKL-NExL)}$	FSMC_CLK low to FSMC_NEx low (x=0..2)	-	1	ns
$t_{d(CLKL-NExH)}$	FSMC_CLK low to FSMC_NEx high (x= 0…2)	1	-	ns

Table 79. Synchronous non-multiplexed PSRAM write timings(1)(2) (continued)

Symbol	Parameter	Min	Max	Unit
$t_{d(CLKL-NADVL)}$	FSMC_CLK low to FSMC_NADV low	-	5	ns
$t_{d(CLKL-NADVH)}$	FSMC_CLK low to FSMC_NADV high	6	-	ns
$t_{d(CLKL-AV)}$	FSMC_CLK low to FSMC_Ax valid (x=16…25)	-	0	ns
$t_{d(CLKL-AIV)}$	FSMC_CLK low to FSMC_Ax invalid (x=16…25)	8	-	ns
$t_{d(CLKL-NWEL)}$	FSMC_CLK low to FSMC_NWE low	-	1	ns
$t_{d(CLKL-NWEH)}$	FSMC_CLK low to FSMC_NWE high	1	-	ns
$t_{d(CLKL-Data)}$	FSMC_D[15:0] valid data after FSMC_CLK low	-	2	ns
$t_{d(CLKL-NBLH)}$	FSMC_CLK low to FSMC_NBL high	2	-	ns

1. C_L = 30 pF.
2. Guaranteed by characterization results, not tested in production.

PC Card/CompactFlash controller waveforms and timings

Figure 65 through *Figure 70* represent synchronous waveforms, with *Table 80* and *Table 81* providing the corresponding timings. The results shown in these table are obtained with the following FSMC configuration:

- COM.FSMC_SetupTime = 0x04;
- COM.FSMC_WaitSetupTime = 0x07;
- COM.FSMC_HoldSetupTime = 0x04;
- COM.FSMC_HiZSetupTime = 0x00;
- ATT.FSMC_SetupTime = 0x04;
- ATT.FSMC_WaitSetupTime = 0x07;
- ATT.FSMC_HoldSetupTime = 0x04;
- ATT.FSMC_HiZSetupTime = 0x00;
- IO.FSMC_SetupTime = 0x04;
- IO.FSMC_WaitSetupTime = 0x07;
- IO.FSMC_HoldSetupTime = 0x04;
- IO.FSMC_HiZSetupTime = 0x00;
- TCLRSetupTime = 0;
- TARSetupTime = 0;

In all timing tables, the T_{HCLK} is the HCLK clock period.

Figure 65. PC Card/CompactFlash controller waveforms for common memory read access

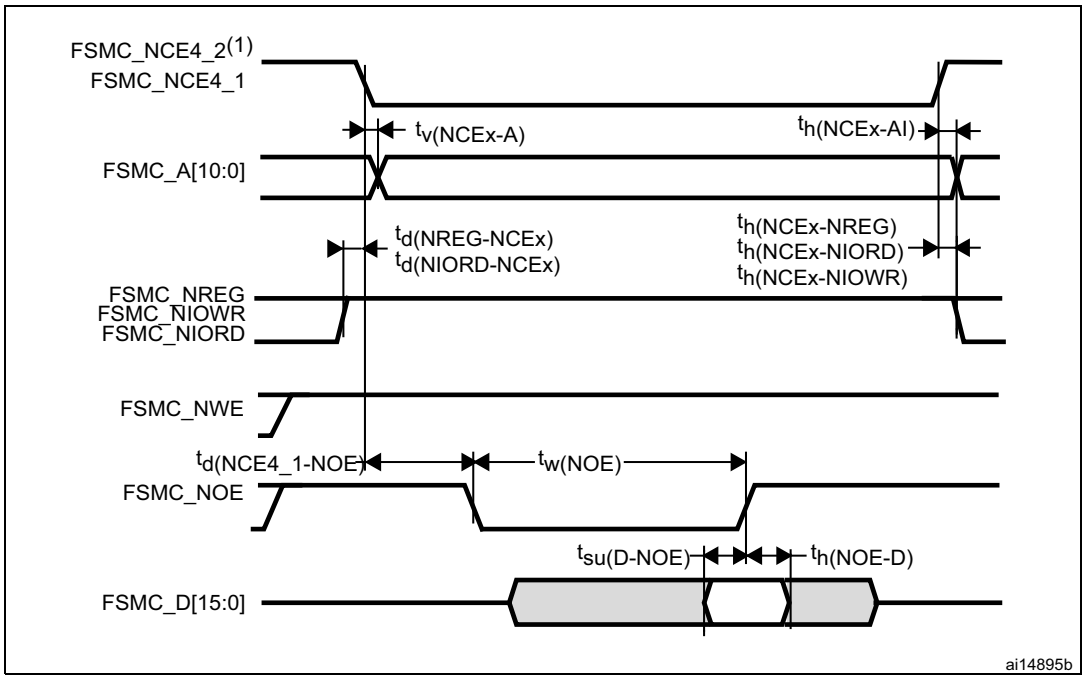

1. FSMC_NCE4_2 remains high (inactive during 8-bit access.

Figure 66. PC Card/CompactFlash controller waveforms for common memory write access

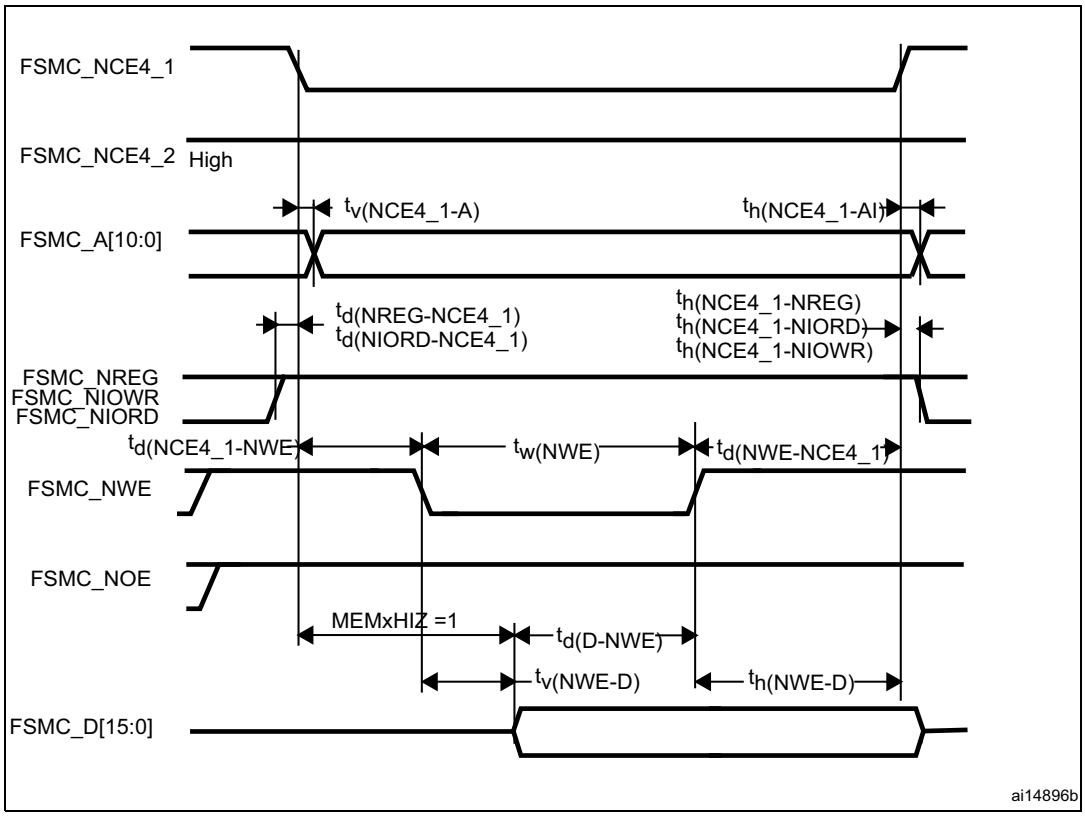

Figure 67. PC Card/CompactFlash controller waveforms for attribute memory read access

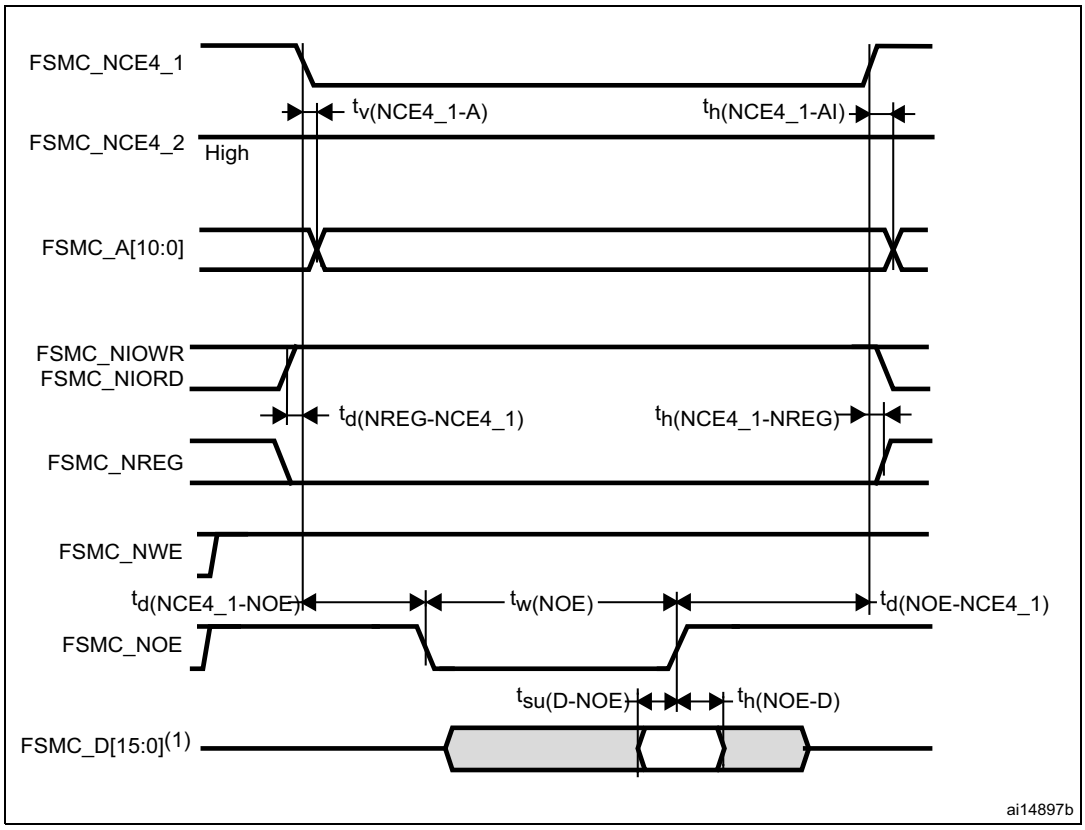

1. Only data bits 0...7 are read (bits 8...15 are disregarded).

Figure 68. PC Card/CompactFlash controller waveforms for attribute memory write access

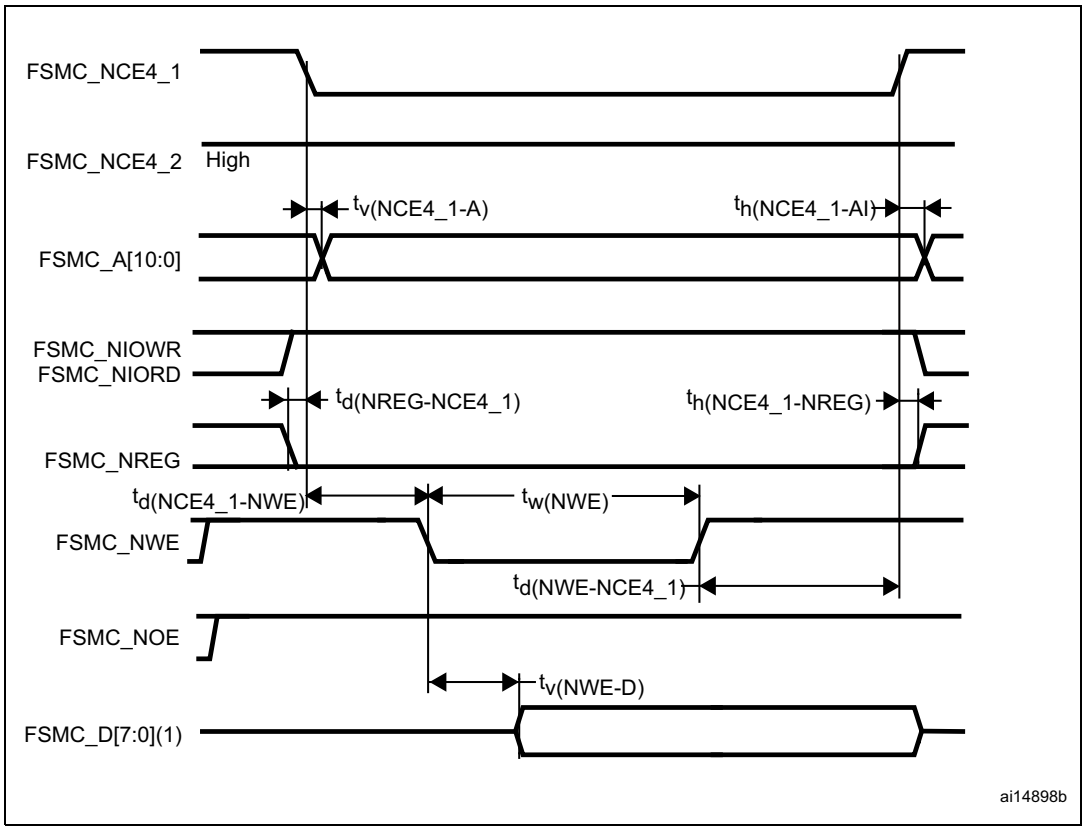

1. Only data bits 0...7 are driven (bits 8...15 remains Hi-Z).

Figure 69. PC Card/CompactFlash controller waveforms for I/O space read access

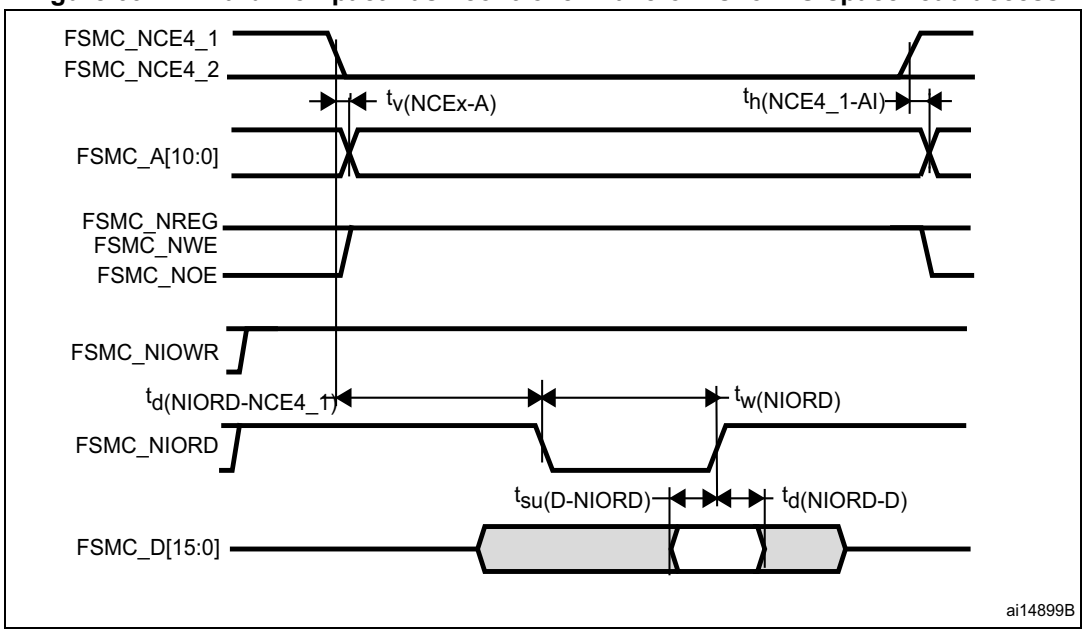

Figure 70. PC Card/CompactFlash controller waveforms for I/O space write access

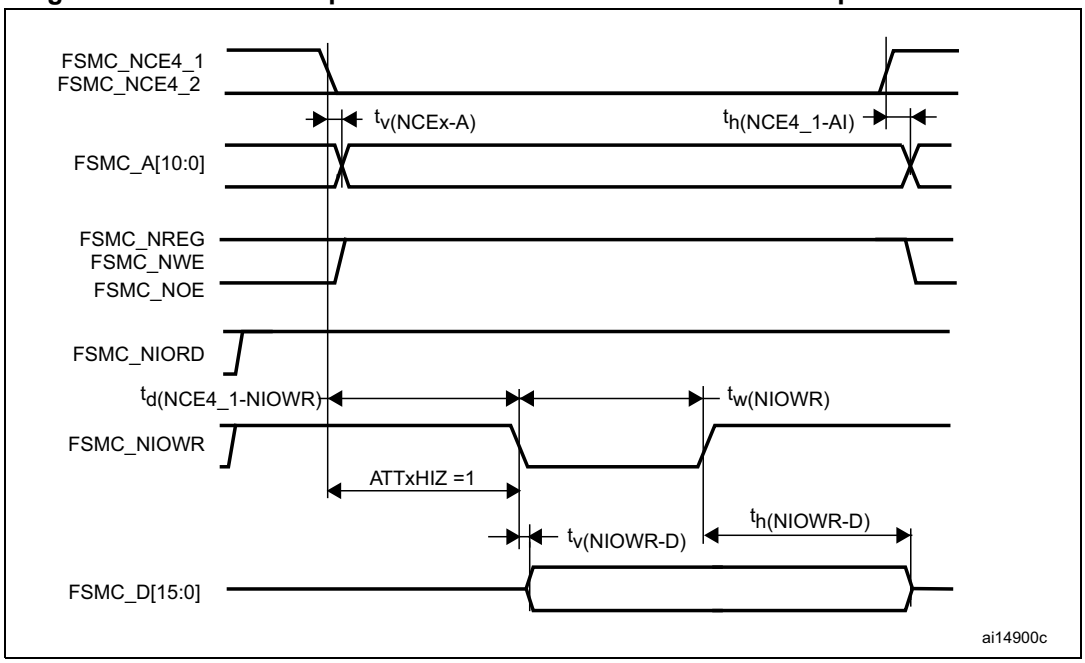

Table 80. Switching characteristics for PC Card/CF read and write cycles in attribute/common space(1)(2)

Symbol	Parameter	Min	Max	Unit
$t_{v(NCEx-A)}$	FSMC_Ncex low to FSMC_Ay valid	-	0	ns
$t_{h(NCEx_AI)}$	FSMC_NCEx high to FSMC_Ax invalid	4	-	ns
$t_{d(NREG-NCEx)}$	FSMC_NCEx low to FSMC_NREG valid	-	3.5	ns
$t_{h(NCEx-NREG)}$	FSMC_NCEx high to FSMC_NREG invalid	T_{HCLK}+ 4	-	ns
$t_{d(NCEx-NWE)}$	FSMC_NCEx low to FSMC_NWE low	-	$5T_{HCLK}$+ 1	ns
$t_{d(NCEx-NOE)}$	FSMC_NCEx low to FSMC_NOE low	-	$5T_{HCLK}$	ns
$t_{w(NOE)}$	FSMC_NOE low width	$8T_{HCLK}$– 0.5	$8T_{HCLK}$+ 1	ns
$t_{d(NOE_NCEx)}$	FSMC_NOE high to FSMC_NCEx high	$5T_{HCLK}$+ 2.5	-	ns
$t_{su\ (D-NOE)}$	FSMC_D[15:0] valid data before FSMC_NOE high	4	-	ns
$t_{h\ (N0E-D)}$	FSMC_N0E high to FSMC_D[15:0] invalid	2	-	ns
$t_{w(NWE)}$	FSMC_NWE low width	$8T_{HCLK}$- 1	$8T_{HCLK}$+ 4	ns
$t_{d(NWE_NCEx)}$	FSMC_NWE high to FSMC_NCEx high	$5T_{HCLK}$+ 1.5	-	ns
$t_{d(NCEx-NWE)}$	FSMC_NCEx low to FSMC_NWE low	-	5HCLK+ 1	ns
$t_{v\ (NWE-D)}$	FSMC_NWE low to FSMC_D[15:0] valid	-	0	ns
$t_{h\ (NWE-D)}$	FSMC_NWE high to FSMC_D[15:0] invalid	$8T_{HCLK}$	-	ns
$t_{d\ (D-NWE)}$	FSMC_D[15:0] valid before FSMC_NWE high	$13T_{HCLK}$	-	ns

1. C_L = 30 pF.
2. Guaranteed by characterization results, not tested in production.

Table 81. Switching characteristics for PC Card/CF read and write cycles in I/O space(1)(2)

Symbol	Parameter	Min	Max	Unit
$t_{w(NIOWR)}$	FSMC_NIOWR low width	$8T_{HCLK}$ - 0.5	-	ns
$t_{v(NIOWR-D)}$	FSMC_NIOWR low to FSMC_D[15:0] valid	-	$5T_{HCLK}$- 1	ns
$t_{h(NIOWR-D)}$	FSMC_NIOWR high to FSMC_D[15:0] invalid	$8T_{HCLK}$- 3	-	ns
$t_{d(NCE4_1-NIOWR)}$	FSMC_NCE4_1 low to FSMC_NIOWR valid	-	$5T_{HCLK}$+ 1.5	ns
$t_{h(NCEx-NIOWR)}$	FSMC_NCEx high to FSMC_NIOWR invalid	$5T_{HCLK}$	-	ns
$t_{d(NIORD-NCEx)}$	FSMC_NCEx low to FSMC_NIORD valid	-	$5T_{HCLK}$+ 1	ns
$t_{h(NCEx-NIORD)}$	FSMC_NCEx high to FSMC_NIORD) valid	$5T_{HCLK}$– 0.5	-	ns
$t_{w(NIORD)}$	FSMC_NIORD low width	$8T_{HCLK}$+ 1	-	ns
$t_{su(D-NIORD)}$	FSMC_D[15:0] valid before FSMC_NIORD high	9.5	-	ns
$t_{d(NIORD-D)}$	FSMC_D[15:0] valid after FSMC_NIORD high	0	-	ns

1. C_L = 30 pF.
2. Guaranteed by characterization results, not tested in production.

NAND controller waveforms and timings

Figure 71 through *Figure 74* represent synchronous waveforms, together with *Table 82* and *Table 83* provides the corresponding timings. The results shown in this table are obtained with the following FSMC configuration:

- COM.FSMC_SetupTime = 0x01;
- COM.FSMC_WaitSetupTime = 0x03;
- COM.FSMC_HoldSetupTime = 0x02;
- COM.FSMC_HiZSetupTime = 0x01;
- ATT.FSMC_SetupTime = 0x01;
- ATT.FSMC_WaitSetupTime = 0x03;
- ATT.FSMC_HoldSetupTime = 0x02;
- ATT.FSMC_HiZSetupTime = 0x01;
- Bank = FSMC_Bank_NAND;
- MemoryDataWidth = FSMC_MemoryDataWidth_16b;
- ECC = FSMC_ECC_Enable;
- ECCPageSize = FSMC_ECCPageSize_512Bytes;
- TCLRSetupTime = 0;
- TARSetupTime = 0;

In all timing tables, the T_{HCLK} is the HCLK clock period.

Figure 71. NAND controller waveforms for read access

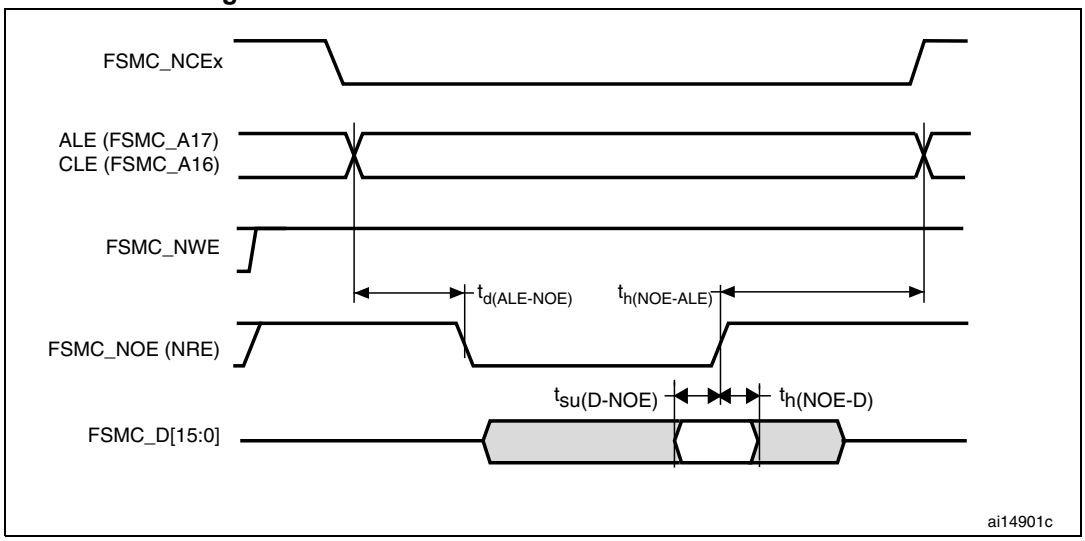

Figure 72. NAND controller waveforms for write access

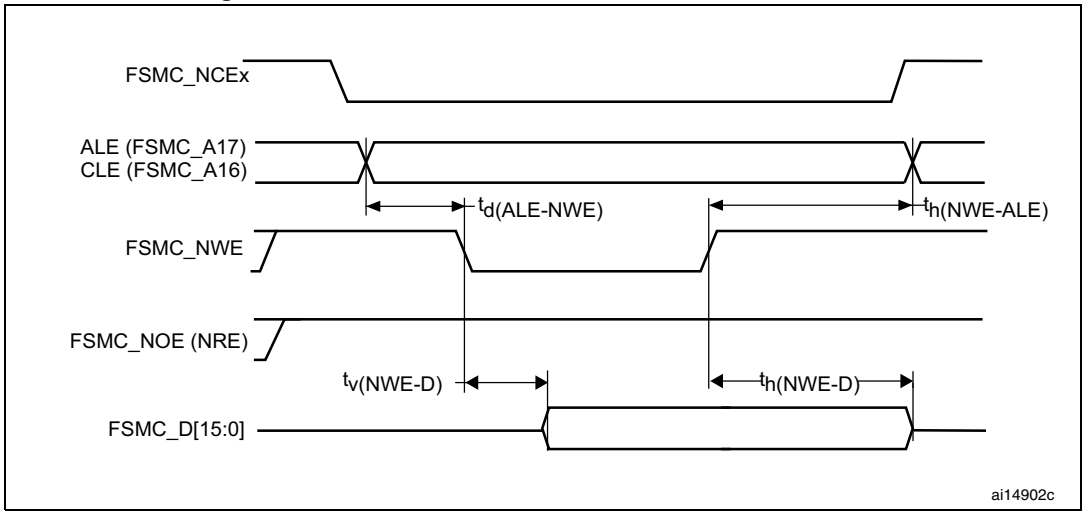

Figure 73. NAND controller waveforms for common memory read access

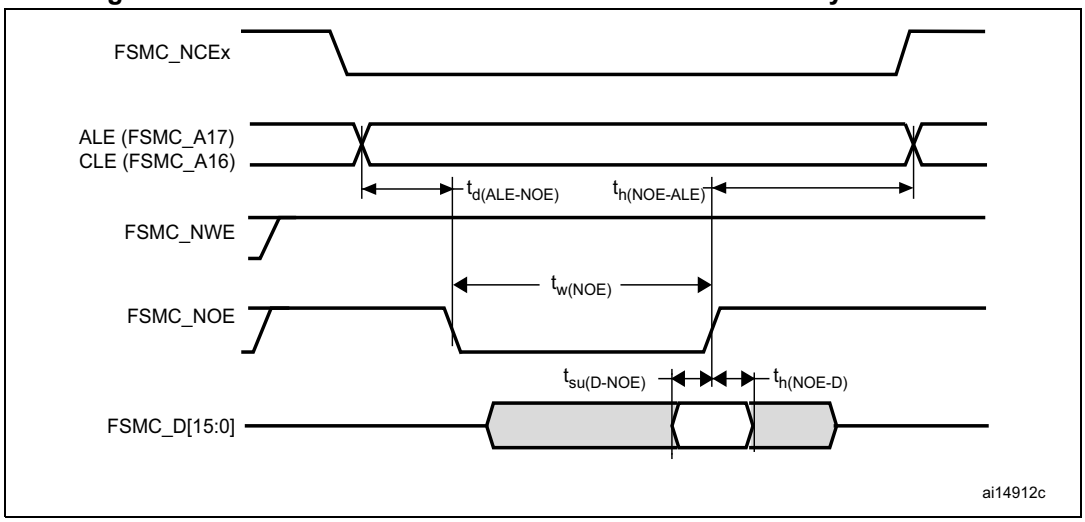

Figure 74. NAND controller waveforms for common memory write access

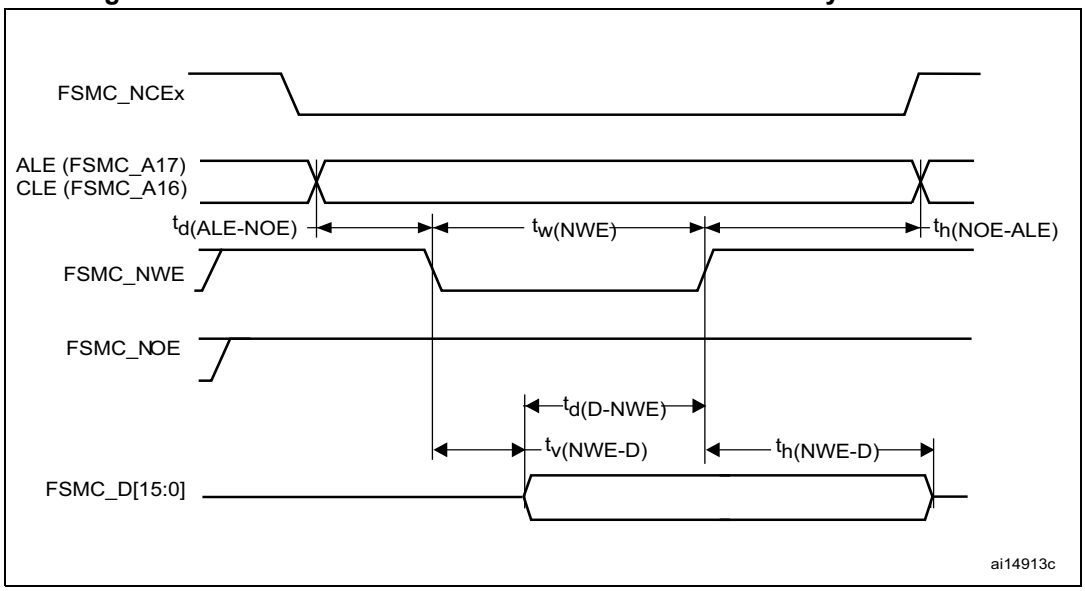

Table 82. Switching characteristics for NAND Flash read cycles(1)(2)

Symbol	Parameter	Min	Max	Unit
$t_{w(N0E)}$	FSMC_NOE low width	$4T_{HCLK}$- 1	$4T_{HCLK}$+ 2	ns
$t_{su(D-NOE)}$	FSMC_D[15-0] valid data before FSMC_NOE high	9	-	ns
$t_{h(NOE-D)}$	FSMC_D[15-0] valid data after FSMC_NOE high	3	-	ns
$t_{d(ALE-NOE)}$	FSMC_ALE valid before FSMC_NOE low	-	$3T_{HCLK}$	ns
$t_{h(NOE-ALE)}$	FSMC_NWE high to FSMC_ALE invalid	$3T_{HCLK}$+ 2	-	ns

1. C_L = 30 pF.
2. Guaranteed by characterization results, not tested in production.

Table 83. Switching characteristics for NAND Flash write cycles(1)(2)

Symbol	Parameter	Min	Max	Unit
$t_{w(NWE)}$	FSMC_NWE low width	$4T_{HCLK}$- 1	$4T_{HCLK}$+ 3	ns
$t_{v(NWE-D)}$	FSMC_NWE low to FSMC_D[15-0] valid	-	0	ns
$t_{h(NWE-D)}$	FSMC_NWE high to FSMC_D[15-0] invalid	$3T_{HCLK}$	-	ns
$t_{d(D-NWE)}$	FSMC_D[15-0] valid before FSMC_NWE high	$5T_{HCLK}$	-	ns
$t_{d(ALE-NWE)}$	FSMC_ALE valid before FSMC_NWE low	-	$3T_{HCLK}$+ 2	ns
$t_{h(NWE-ALE)}$	FSMC_NWE high to FSMC_ALE invalid	$3T_{HCLK}$- 2	-	ns

1. C_L = 30 pF.
2. Guaranteed by characterization results, not tested in production.

6.3.26 Camera interface (DCMI) timing specifications

Table 84. DCMI characteristics

Symbol	Parameter	Conditions	Min	Max
-	Frequency ratio DCMI_PIXCLK/f_{HCLK}	DCMI_PIXCLK= 48 MHz	-	0.4

6.3.27 SD/SDIO MMC card host interface (SDIO) characteristics

Unless otherwise specified, the parameters given in *Table 85* are derived from tests performed under ambient temperature, f_{PCLKx} frequency and V_{DD} supply voltage conditions summarized in *Table 14*.

Refer to *Section 6.3.16: I/O port characteristics* for more details on the input/output alternate function characteristics (D[7:0], CMD, CK).

Figure 75. SDIO high-speed mode

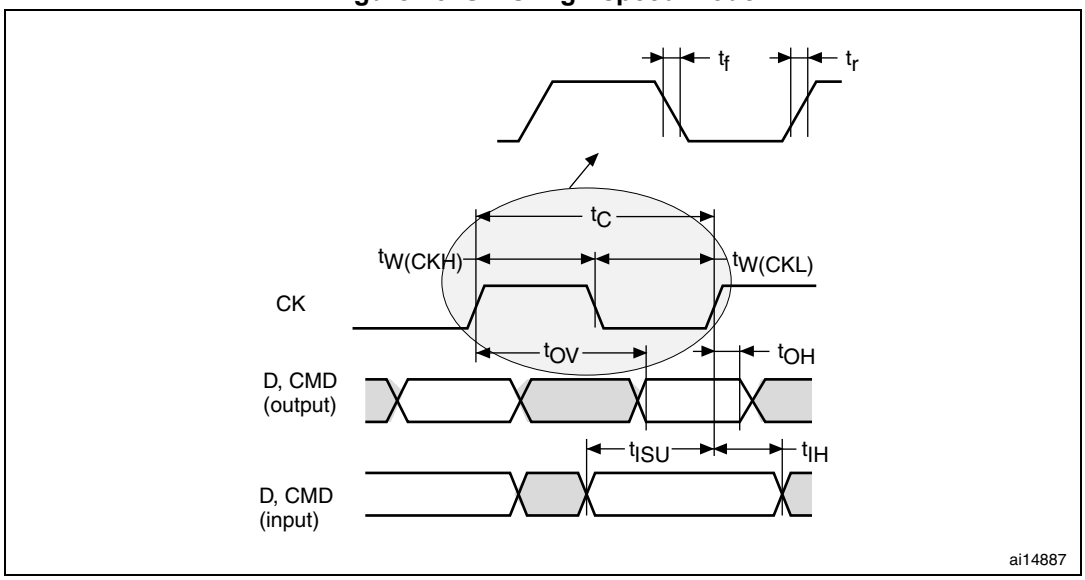

Figure 76. SD default mode

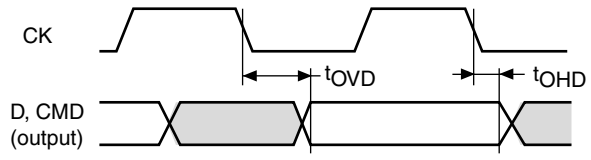

Table 85. SD/MMC characteristics

Symbol	Parameter	Conditions	Min	Max	Unit
f_{PP}	Clock frequency in data transfer mode	$C_L \leq 30$ pF	0	48	MHz
-	SDIO_CK/f_{PCLK2} frequency ratio	-	-	8/3	-
$t_{W(CKL)}$	Clock low time, f_{PP} = 16 MHz	$C_L \leq 30$ pF	32	-	ns
$t_{W(CKH)}$	Clock high time, f_{PP} = 16 MHz	$C_L \leq 30$ pF	31	-	
t_r	Clock rise time	$C_L \leq 30$ pF	-	3.5	
t_f	Clock fall time	$C_L \leq 30$ pF	-	5	
CMD, D inputs (referenced to CK)					
t_{ISU}	Input setup time	$C_L \leq 30$ pF	2	-	ns
t_{IH}	Input hold time	$C_L \leq 30$ pF	0	-	
CMD, D outputs (referenced to CK) in MMC and SD HS mode					
t_{OV}	Output valid time	$C_L \leq 30$ pF	-	6	ns
t_{OH}	Output hold time	$C_L \leq 30$ pF	0.3	-	
CMD, D outputs (referenced to CK) in SD default mode(1)					
t_{OVD}	Output valid default time	$C_L \leq 30$ pF	-	7	ns
t_{OHD}	Output hold default time	$C_L \leq 30$ pF	0.5	-	

1. Refer to SDIO_CLKCR, the SDI clock control register to control the CK output.

6.3.28 RTC characteristics

Table 86. RTC characteristics

Symbol	Parameter	Conditions	Min	Max
-	f_{PCLK1}/RTCCLK frequency ratio	Any read/write operation from/to an RTC register	4	-

7 Package information

In order to meet environmental requirements, ST offers these devices in different grades of ECOPACK® packages, depending on their level of environmental compliance. ECOPACK® specifications, grade definitions and product status are available at: *www.st.com*. ECOPACK® is an ST trademark.

7.1 LQFP64 package information

Figure 77. LQFP64 - 64-pin, 10 x 10 mm low-profile quad flat package outline

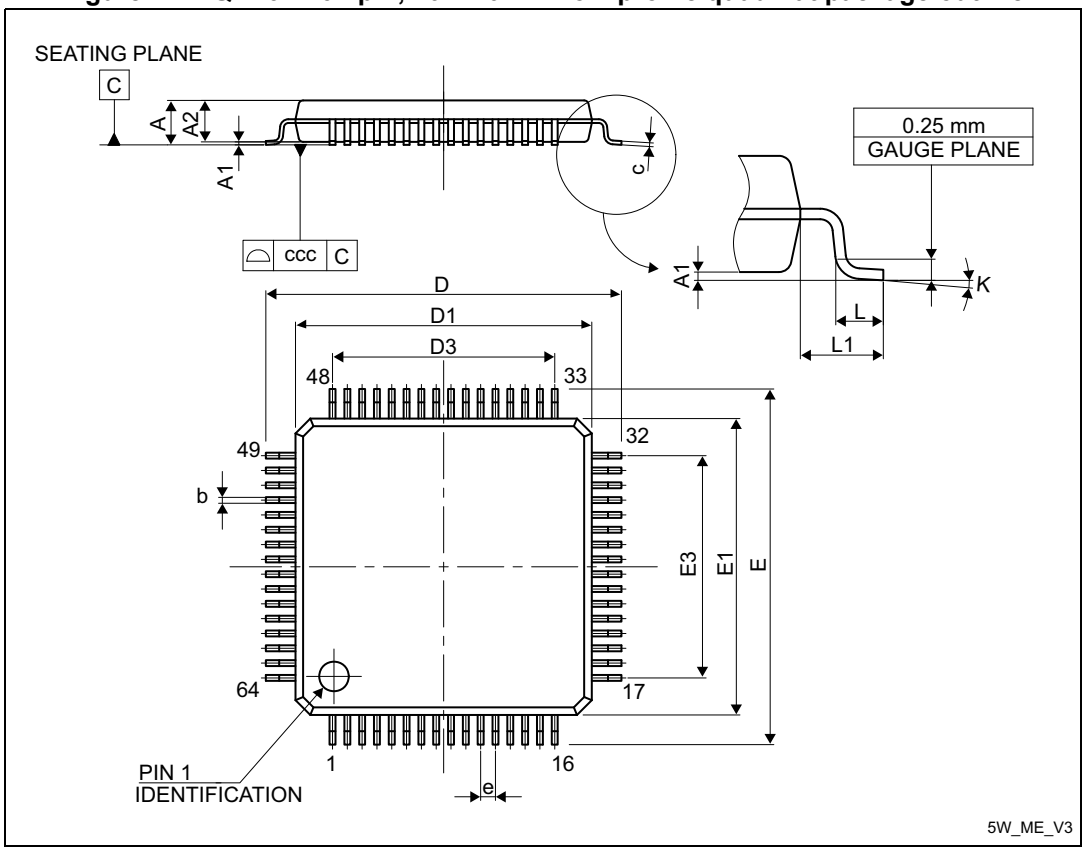

1. Drawing is not to scale.

Table 87. LQFP64 - 64-pin, 10 x 10 mm low-profile quad flat package mechanical data

Symbol	millimeters			inches(1)		
	Min	Typ	Max	Min	Typ	Max
A	-	-	1.600	-	-	0.0630
A1	0.050	-	0.150	0.0020	-	0.0059
A2	1.350	1.400	1.450	0.0531	0.0551	0.0571
b	0.170	0.220	0.270	0.0067	0.0087	0.0106

Table 87. LQFP64 - 64-pin, 10 x 10 mm low-profile quad flat package mechanical data (continued)

Symbol	millimeters			inches[1]		
	Min	Typ	Max	Min	Typ	Max
c	0.090	-	0.200	0.0035	-	0.0079
D	-	12.000	-	-	0.4724	-
D1	-	10.000	-	-	0.3937	-
D3	-	7.500	-	-	0.2953	-
E	-	12.000	-	-	0.4724	-
E1	-	10.000	-	-	0.3937	-
E3	-	7.500	-	-	0.2953	-
e	-	0.500	-	-	0.0197	-
K	0°	3.5°	7°	0°	3.5°	7°
L	0.450	0.600	0.750	0.0177	0.0236	0.0295
L1	-	1.000	-	-	0.0394	-
ccc	-	-	0.080	-	-	0.0031

1. Values in inches are converted from mm and rounded to 4 decimal digits.

Figure 78. LQFP64 - 64-pin, 10 x 10 mm low-profile quad flat package recommended footprint

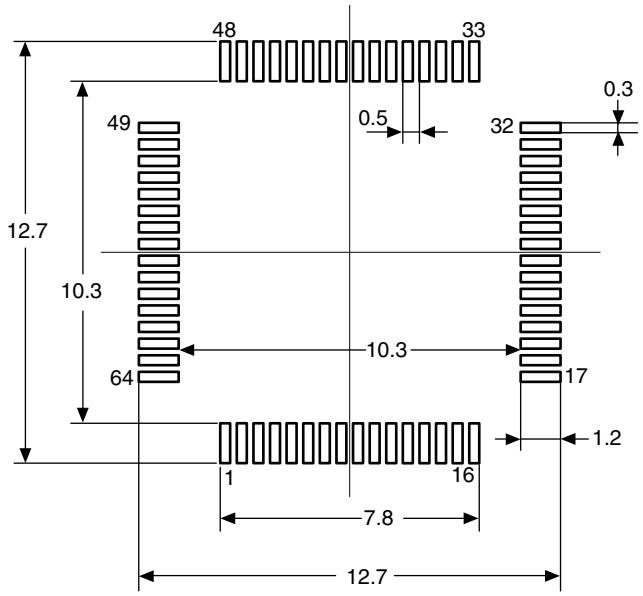

1. Dimensions are expressed in millimeters.

7.2 WLCSP64+2 package information

Figure 79. WLCSP64+2 - 66-ball, 3.639 x 3.971 mm, 0.4 mm pitch wafer level chip scale package outline

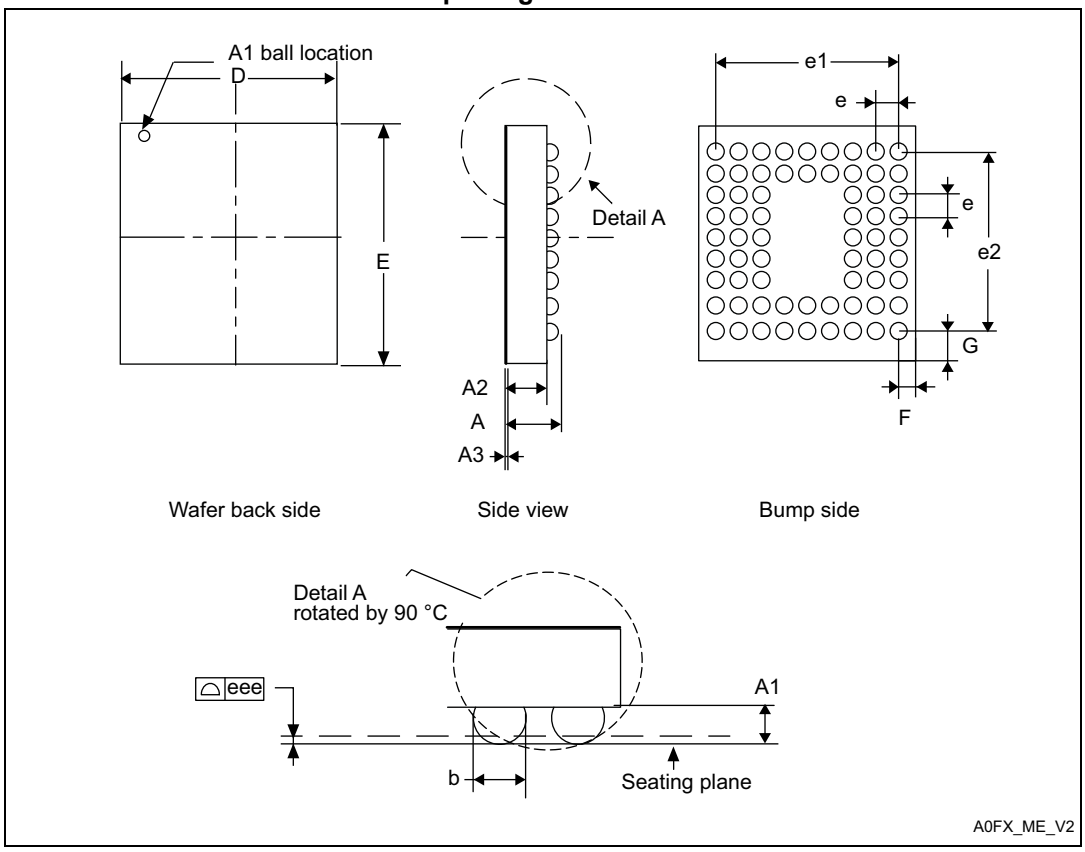

1. Drawing is not to scale.

Table 88. WLCSP64+2 - 66-ball, 4.539 x 4.911 mm, 0.4 mm pitch wafer level chip scale package mechanical data

Symbol	millimeters			inches(1)		
	Min	Typ	Max	Min	Typ	Max
A	0.540	0.570	0.600	0.0213	0.0224	0.0236
A1	-	0.190	-	-	0.0075	-
A2	-	0.380	-	-	0.0150	-
A3	-	0.025	-	-	0.0100	-
b(2)	0.240	0.270	0.300	0.0094	0.0106	0.0118
D	3.604	3.639	3.674	0.1419	0.1433	0.1446
E	3.936	3.971	4.006	0.1550	0.1563	0.1577
e	-	0.400	-	-	0.0157	-
e1	-	3.200	-	-	0.1260	-

Table 88. WLCSP64+2 - 66-ball, 4.539 x 4.911 mm, 0.4 mm pitch wafer level chip scale package mechanical data (continued)

Symbol	millimeters			inches[1]		
	Min	Typ	Max	Min	Typ	Max
e2	-	3.200	-	-	0.1260	-
F	-	0.220	-	-	0.0087	-
G	-	0.386	-	-	0.0152	-
aaa	-	-	0.100	-	-	0.0039
bbb	-	-	0.100	-	-	0.0039
ccc	-	-	0.100	-	-	0.0039
ddd	-	-	0.050	-	-	0.0020
eee	-	-	0.050	-	-	0.0020

1. Values in inches are converted from mm and rounded to 4 decimal digits.
2. Dimension is measured at the maximum bump diameter parallel to primary datum Z.

Figure 80. WLCSP64+2 - 66-ball, 4.539 x 4.911 mm, 0.4 mm pitch wafer level chip scale package recommended footprint

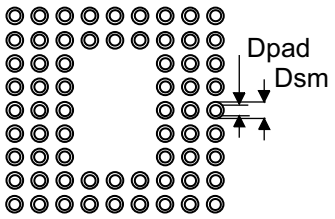

Table 89. WLCSP64 recommended PCB design rules (0.4 mm pitch)

Dimension	Recommended values
Pitch	0.4
Dpad	0.225 mm
Dsm	0.290 mm typ. (depends on the soldermask registration tolerance)
Stencil opening	0.250 mm
Stencil thickness	0.100 mm

7.3 LQFP100 package information

Figure 81. LQFP100 - 100-pin, 14 x 14 mm low-profile quad flat package outline

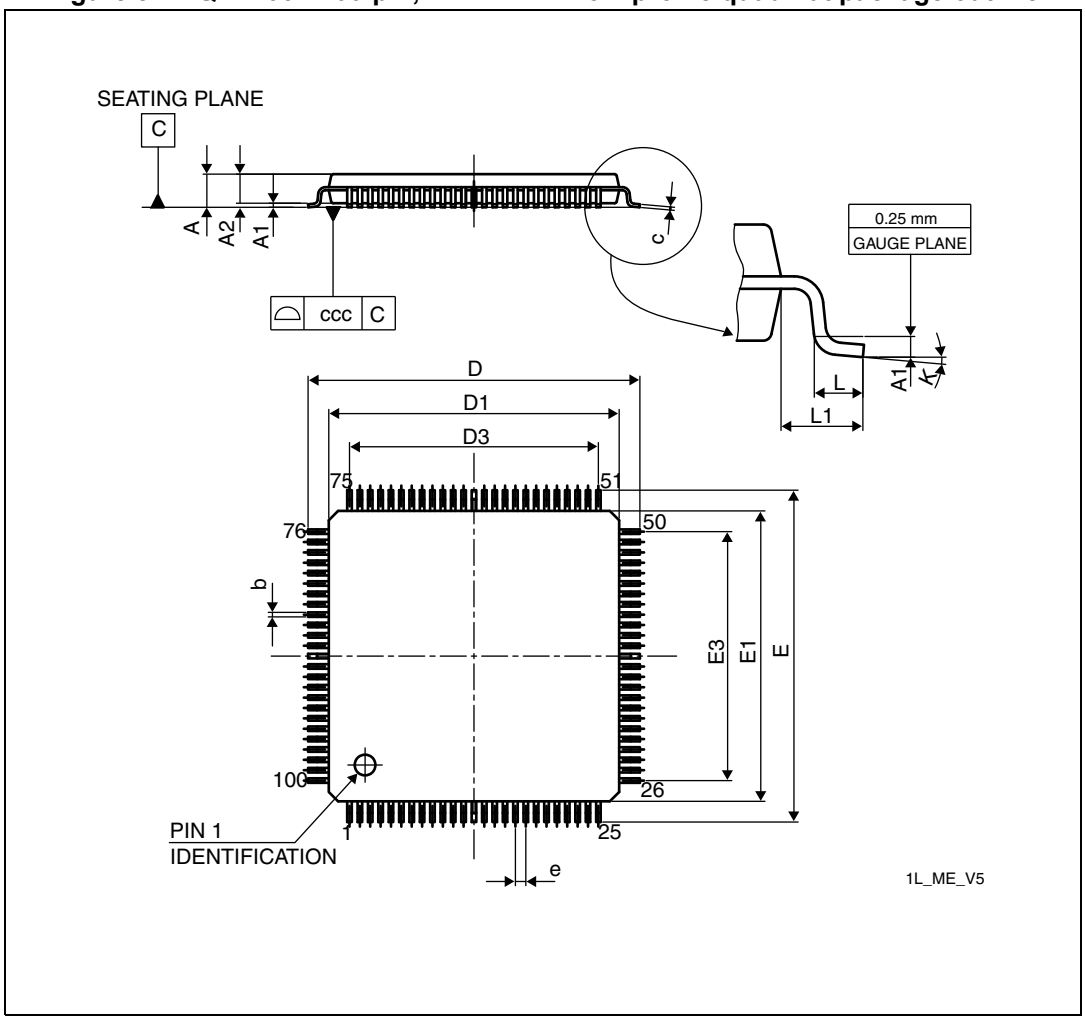

1. Drawing is not to scale.

Table 90. LQPF100 - 100-pin, 14 x 14 mm low-profile quad flat package mechanical data

Symbol	millimeters			inches(1)		
	Min	Typ	Max	Min	Typ	Max
A	-	-	1.600	-	-	0.0630
A1	0.050	-	0.150	0.0020	-	0.0059
A2	1.350	1.400	1.450	0.0531	0.0551	0.0571
b	0.170	0.220	0.270	0.0067	0.0087	0.0106
c	0.090	-	0.200	0.0035	-	0.0079
D	15.800	16.000	16.200	0.6220	0.6299	0.6378
D1	13.800	14.000	14.200	0.5433	0.5512	0.5591

Table 90. LQPF100 - 100-pin, 14 x 14 mm low-profile quad flat package mechanical data (continued)

Symbol	millimeters			inches[1]		
	Min	Typ	Max	Min	Typ	Max
D3	-	12.000	-	-	0.4724	-
E	15.800	16.000	16.200	0.6220	0.6299	0.6378
E1	13.800	14.000	14.200	0.5433	0.5512	0.5591
E3	-	12.000	-	-	0.4724	-
e	-	0.500	-	-	0.0197	-
L	0.450	0.600	0.750	0.0177	0.0236	0.0295
L1	-	1.000	-	-	0.0394	-
k	0.0°	3.5°	7.0°	0.0°	3.5°	7.0°
ccc	-	-	0.080	-	-	0.0031

1. Values in inches are converted from mm and rounded to 4 decimal digits.

Figure 82. LQFP100 - 100-pin, 14 x 14 mm low-profile quad flat recommended footprint

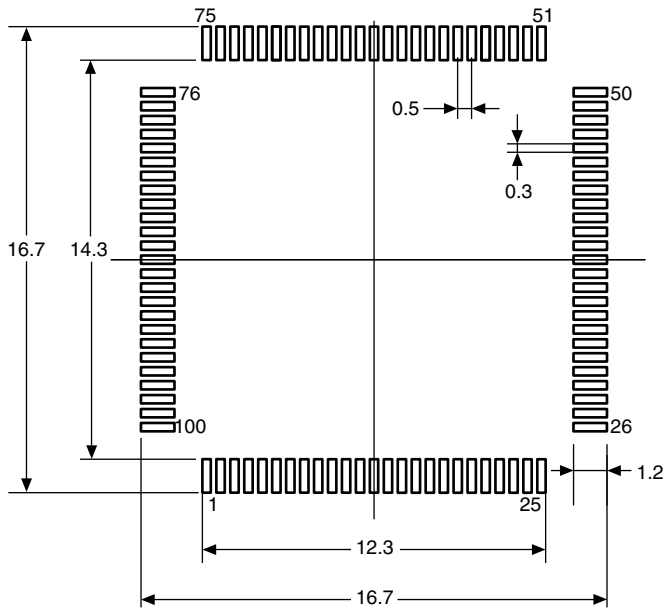

1. Dimensions are expressed in millimeters.

Device marking

Figure 83 gives an example of topside marking orientation versus Pin 1 identifier location.

Figure 83. LQFP100 marking (package top view)

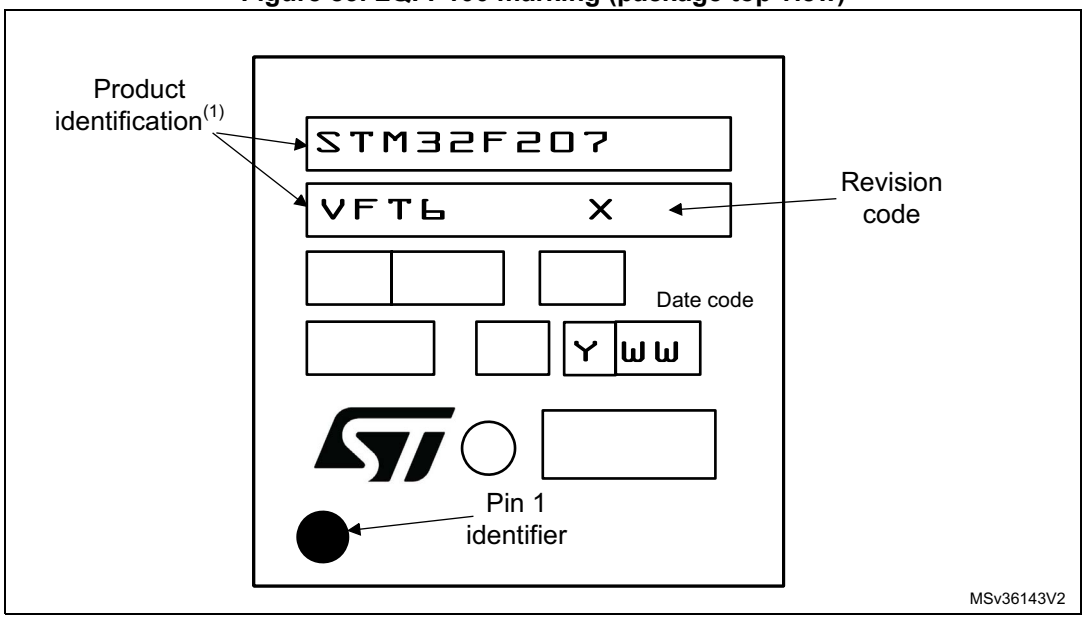

1. Parts marked as “ES”, “E” or accompanied by an Engineering Sample notification letter, are not yet qualified and therefore not yet ready to be used in production and any consequences deriving from such usage will not be at ST charge. In no event, ST will be liable for any customer usage of these engineering samples in production. ST Quality has to be contacted prior to any decision to use these Engineering samples to run qualification activity.

7.4 LQFP144 package information

Figure 84. LQFP144 - 144-pin, 20 x 20 mm low-profile quad flat package outline

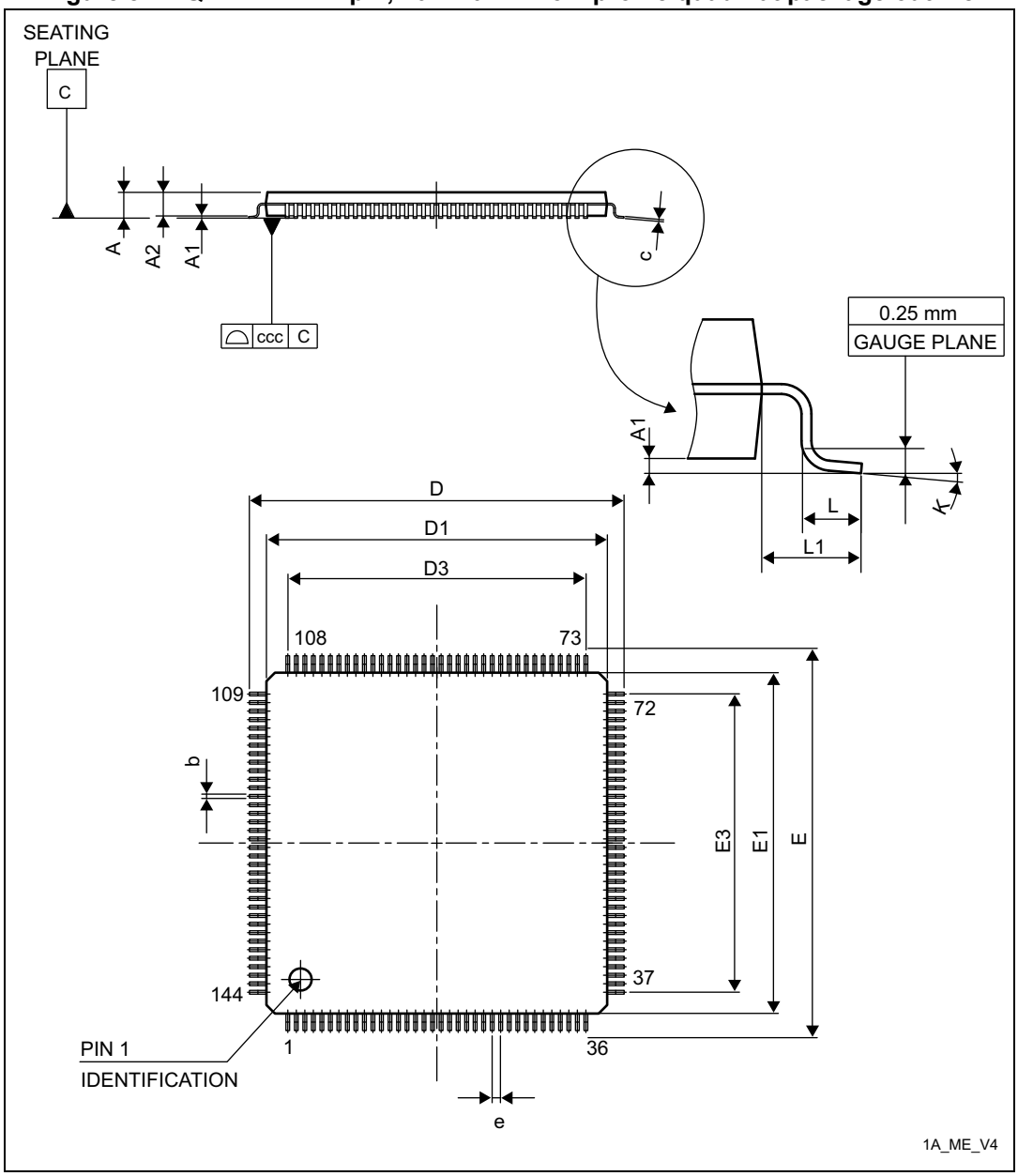

1. Drawing is not to scale.

Table 91. LQFP144 - 144-pin, 20 x 20 mm low-profile quad flat package mechanical data

Symbol	millimeters			inches[1]		
	Min	Typ	Max	Min	Typ	Max
A	-	-	1.600	-	-	0.0630
A1	0.050	-	0.150	0.0020	-	0.0059
A2	1.350	1.400	1.450	0.0531	0.0551	0.0571
b	0.170	0.220	0.270	0.0067	0.0087	0.0106
c	0.090	-	0.200	0.0035	-	0.0079
D	21.800	22.000	22.200	0.8583	0.8661	0.8740
D1	19.800	20.000	20.200	0.7795	0.7874	0.7953
D3	-	17.500	-	-	0.6890	-
E	21.800	22.000	22.200	0.8583	0.8661	0.8740
E1	19.800	20.000	20.200	0.7795	0.7874	0.7953
E3	-	17.500	-	-	0.6890	-
e	-	0.500	-	-	0.0197	-
L	0.450	0.600	0.750	0.0177	0.0236	0.0295
L1	-	1.000	-	-	0.0394	-
k	0°	3.5°	7°	0°	3.5°	7°
ccc	-	-	0.080	-	-	0.0031

1. Values in inches are converted from mm and rounded to 4 decimal digits.

Figure 85. LQFP144 - 144-pin,20 x 20 mm low-profile quad flat package recommended footprint

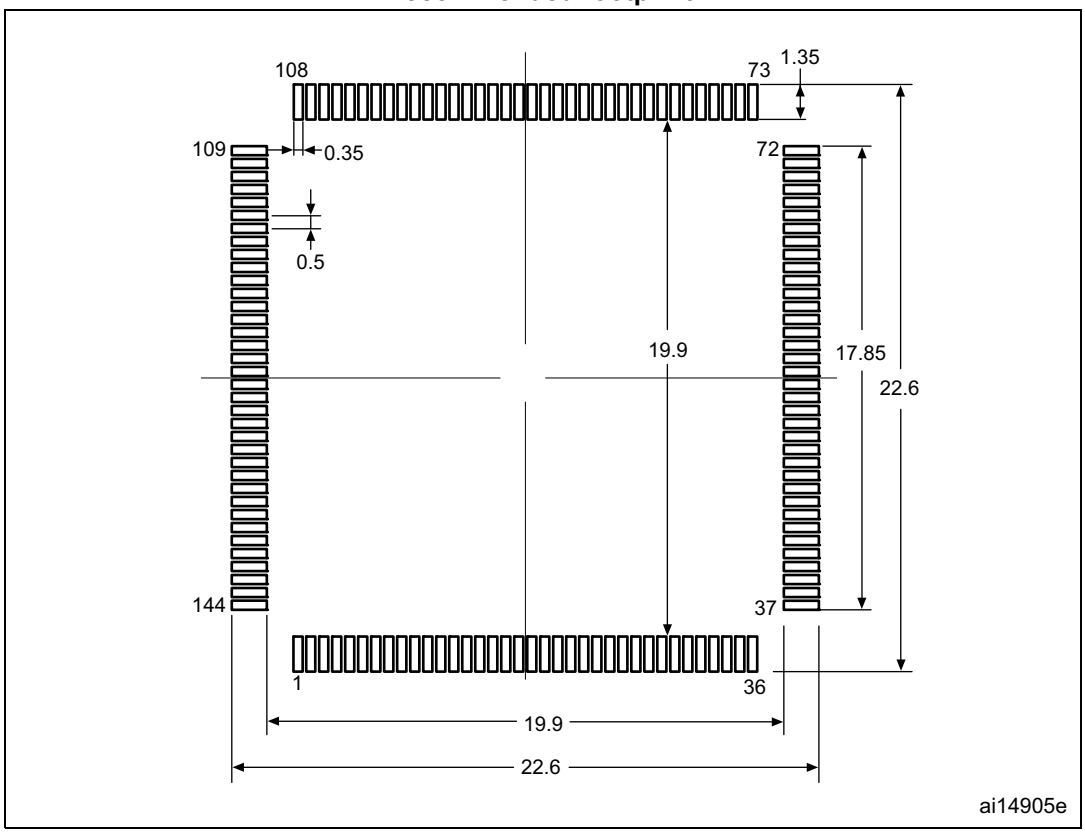

1. Dimensions are expressed in millimeters.

Device marking

Figure 86 gives an example of topside marking orientation versus Pin 1 identifier location.

Figure 86. LQFP144 marking (package top view)

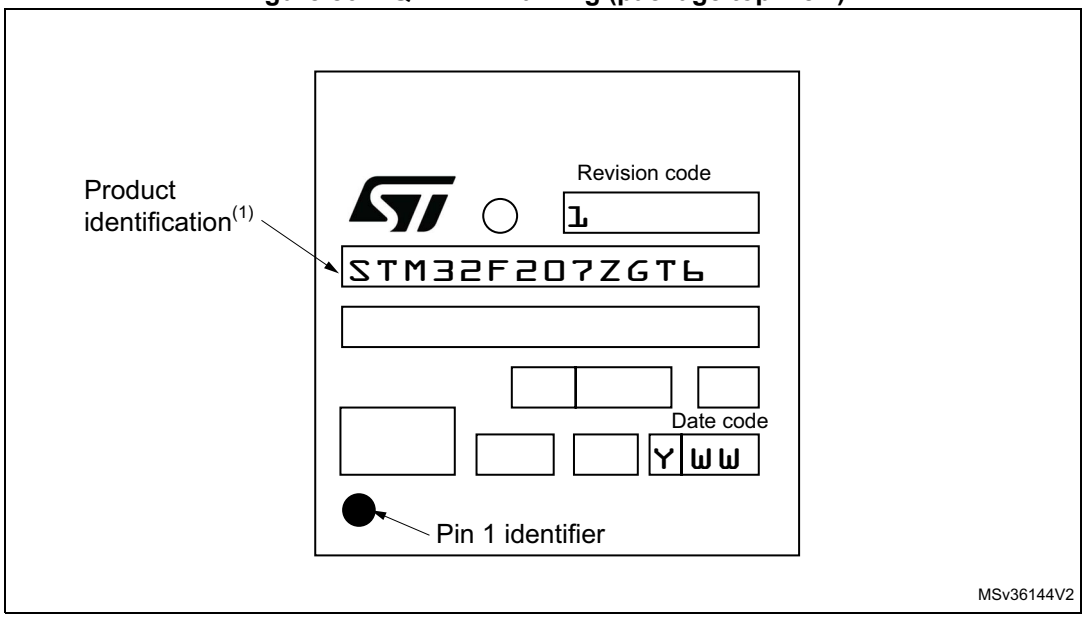

1. Parts marked as “ES”, “E” or accompanied by an Engineering Sample notification letter, are not yet qualified and therefore not yet ready to be used in production and any consequences deriving from such usage will not be at ST charge. In no event, ST will be liable for any customer usage of these engineering samples in production. ST Quality has to be contacted prior to any decision to use these Engineering samples to run qualification activity.

7.5 LQFP176 package information

Figure 87. LQFP176 - 176-pin, 24 x 24 mm low profile quad flat package outline

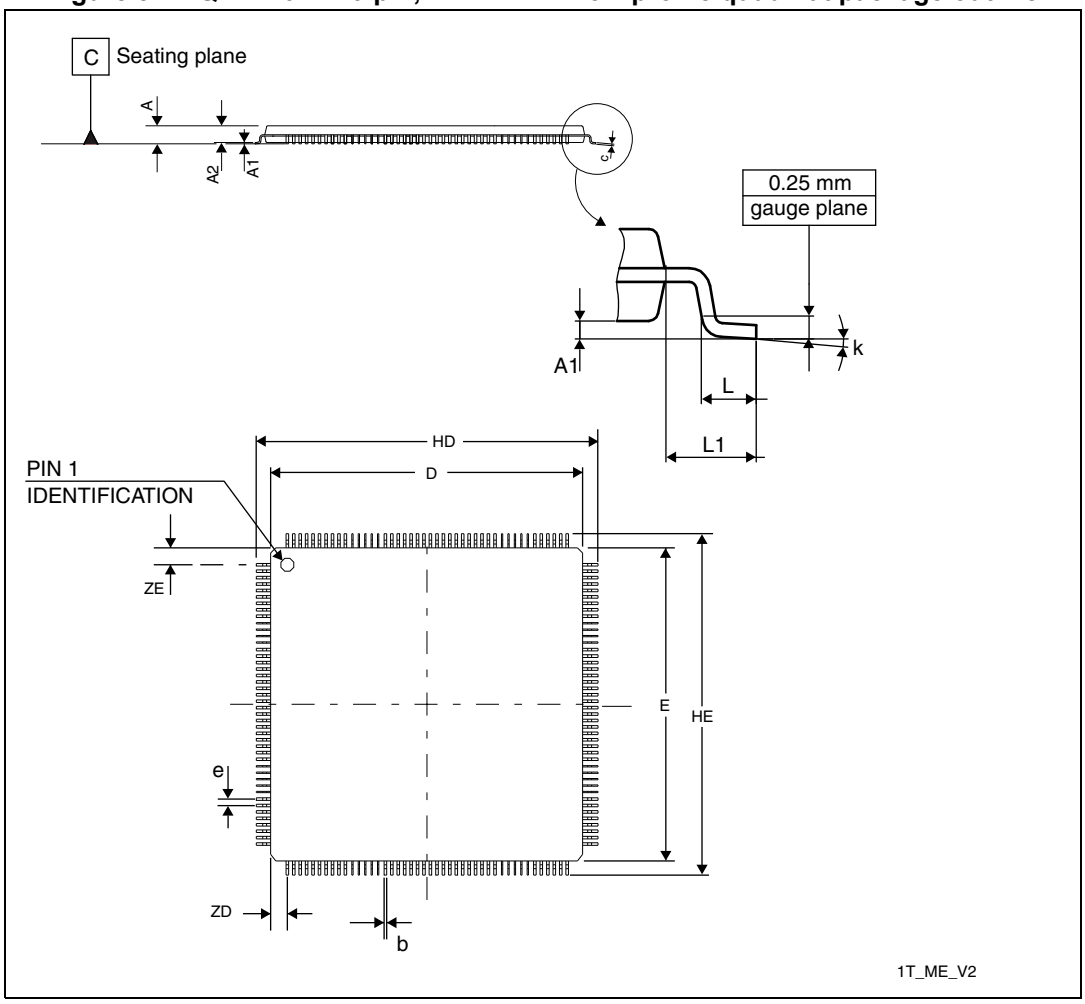

1. Drawing is not to scale.

Table 92. LQFP176 - 176-pin, 24 x 24 mm low profile quad flat package mechanical data

Symbol	Dimensions					
	millimeters			inches(1)		
	Min	Typ	Max	Min	Typ	Max
A	-	-	1.600	-	-	0.0630
A1	0.050	-	0.150	0.0020	-	0.0059
A2	1.350	-	1.450	0.0531	-	0.0571
b	0.170	-	0.270	0.0067	-	0.0106
c	0.090	-	0.200	0.0035	-	0.0079
D	23.900	-	24.100	0.9409	-	0.9488

Table 92. LQFP176 - 176-pin, 24 x 24 mm low profile quad flat package mechanical data (continued)

Symbol	Dimensions					
	millimeters			inches[1]		
	Min	Typ	Max	Min	Typ	Max
HD	25.900	-	26.100	1.0197	-	1.0276
ZD	-	1.250	-	-	0.0492	-
E	23.900	-	24.100	0.9409	-	0.9488
HE	25.900	-	26.100	1.0197	-	1.0276
ZE	-	1.250	-	-	0.0492	-
e	-	0.500	-	-	0.0197	-
L[2]	0.450	-	0.750	0.0177	-	0.0295
L1	-	1.000	-	-	0.0394	-
k	0°	-	7°	0°	-	7°
ccc	-	-	0.080	-	-	0.0031

1. Values in inches are converted from mm and rounded to 4 decimal digits.
2. L dimension is measured at gauge plane at 0.25 mm above the seating plane.

Figure 88. LQFP176 - 176-pin, 24 x 24 mm low profile quad flat package recommended footprint

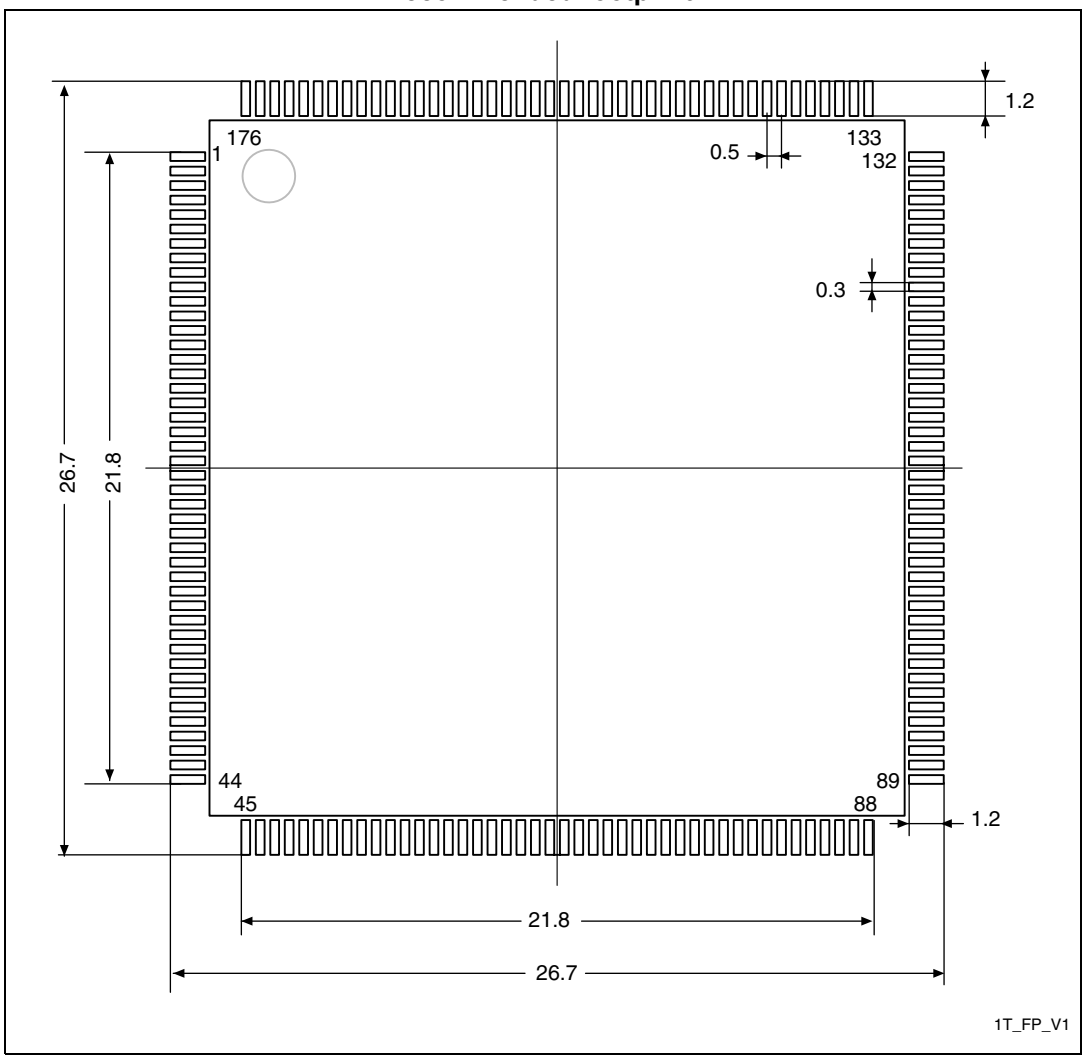

1. Dimensions are expressed in millimeters.

7.6 UFBGA176+25 package information

Figure 89. UFBGA176+25 - 201-ball, 10 x 10 mm, 0.65 mm pitch, ultra fine pitch ball grid array package outline

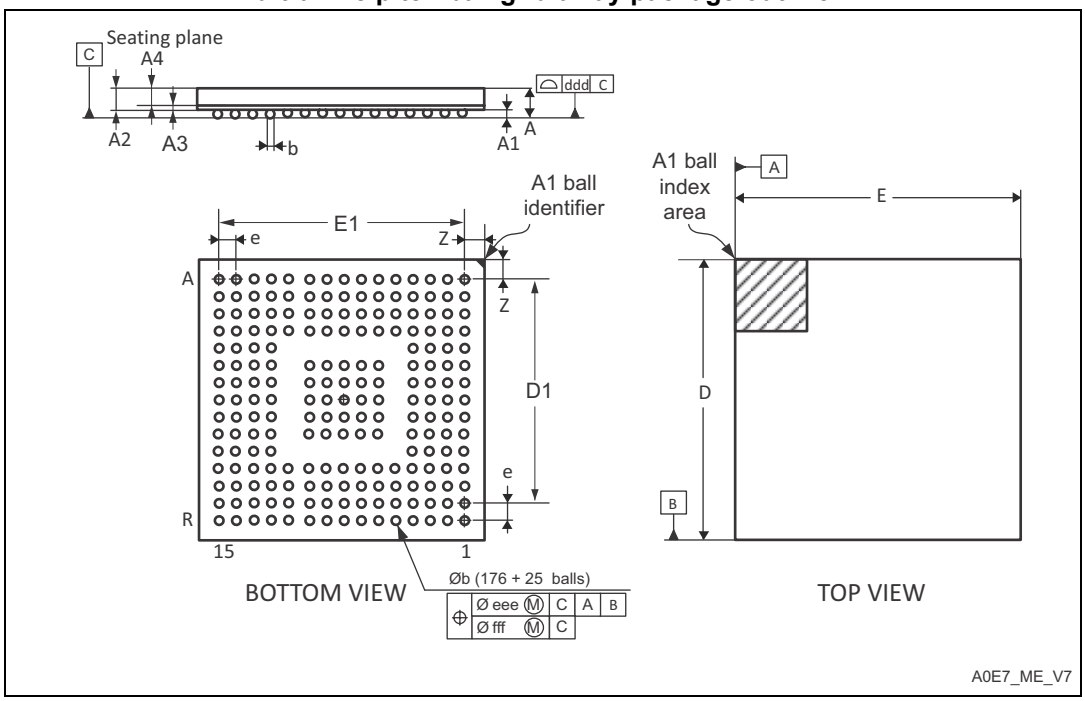

1. Drawing is not to scale.

Table 93. UFBGA176+25, - 201-ball, 10 x 10 mm, 0.65 mm pitch, ultra fine pitch ball grid array package mechanical data

Symbol	millimeters			inches(1)		
	Min	Typ	Max	Min	Typ	Max
A	-	-	0.600	-	-	0.0236
A1	-	-	0.110	-	-	0.0043
A2	-	0.450	-	-	0.0177	-
A3	-	0.130	-	-	0.0051	0.0094
A4	-	0.320	-	-	0.0126	-
b	0.240	0.290	0.340	0.0094	0.0114	0.0134
D	9.850	10.000	10.150	0.3878	0.3937	0.3996
D1	-	9.100	-	-	0.3583	-
E	9.850	10.000	10.150	0.3878	0.3937	0.3996
E1	-	9.100	-	-	0.3583	-
e	-	0.650	-	-	0.0256	-
Z	-	0.450	-	-	0.0177	-
ddd	-	-	0.080	-	-	0.0031

Table 93. UFBGA176+25, - 201-ball, 10 x 10 mm, 0.65 mm pitch, ultra fine pitch ball grid array package mechanical data (continued)

Symbol	millimeters			inches[1]		
	Min	Typ	Max	Min	Typ	Max
eee	-	-	0.150	-	-	0.0059
fff	-	-	0.050	-	-	0.0020

1. Values in inches are converted from mm and rounded to 4 decimal digits.

Figure 90. UFBGA176+25 - 201-ball, 10 x 10 mm, 0.65 mm pitch, ultra fine pitch ball grid array package recommended footprint

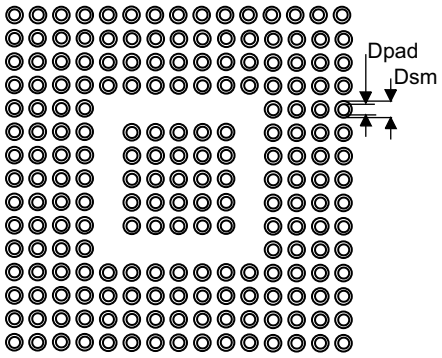

Table 94. UFBGA176+25 recommended PCB design rules (0.65 mm pitch BGA)

Dimension	Recommended values
Pitch	0.65 mm
Dpad	0.300 mm
Dsm	0.400 mm typ (depends on the soldermask registration tolerance)
Stencil opening	0.300 mm
Stencil thickness	Between 0.100 mm and 0.125 mm
Pad trace width	0.100 mm

Device marking

Figure 91. UFBGA176+25 marking (package top view)

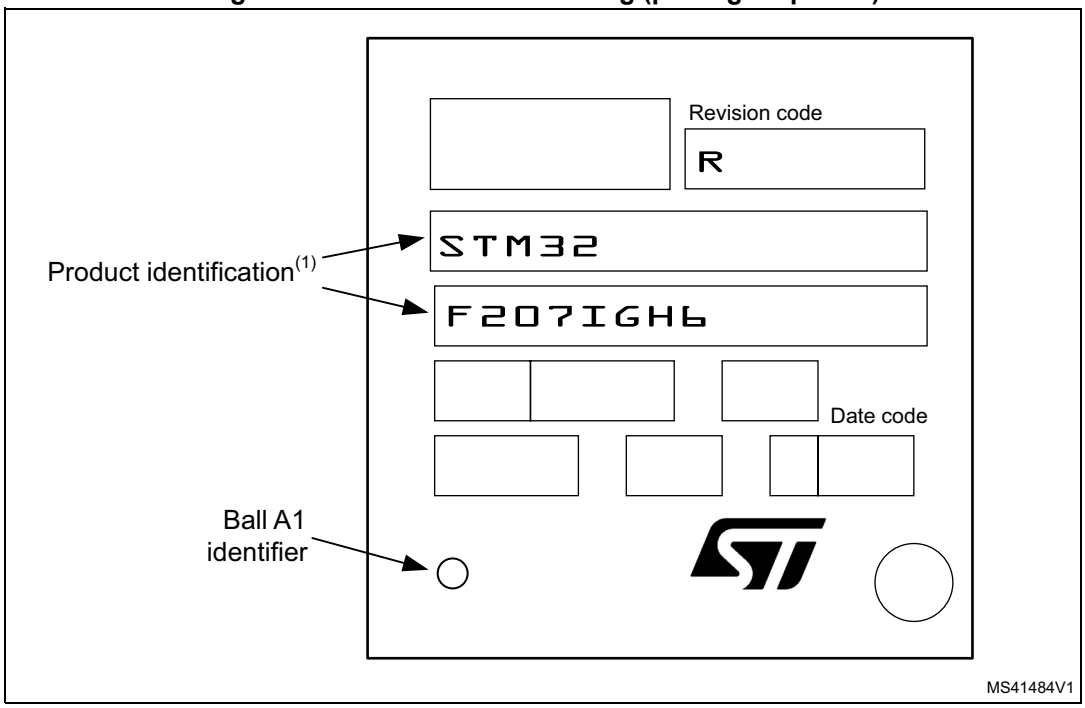

1. Parts marked as “ES”, “E” or accompanied by an Engineering Sample notification letter, are not yet qualified and therefore not yet ready to be used in production and any consequences deriving from such usage will not be at ST charge. In no event, ST will be liable for any customer usage of these engineering samples in production. ST Quality has to be contacted prior to any decision to use these Engineering samples to run qualification activity.

7.7 Thermal characteristics

The maximum chip-junction temperature, T_J max, in degrees Celsius, may be calculated using the following equation:

$$T_J \text{ max} = T_A \text{ max} + (P_D \text{ max} \times \Theta_{JA})$$

Where:

- T_A max is the maximum ambient temperature in °C,
- Θ_{JA} is the package junction-to-ambient thermal resistance, in °C/W,
- P_D max is the sum of P_{INT} max and $P_{I/O}$ max (P_D max = P_{INT} max + $P_{I/O}$max),
- P_{INT} max is the product of I_{DD} and V_{DD}, expressed in Watts. This is the maximum chip internal power.

$P_{I/O}$ max represents the maximum power dissipation on output pins where:

$$P_{I/O} \text{ max} = \Sigma (V_{OL} \times I_{OL}) + \Sigma((V_{DD} - V_{OH}) \times I_{OH}),$$

taking into account the actual V_{OL} / I_{OL} and V_{OH} / I_{OH} of the I/Os at low and high level in the application.

Table 95. Package thermal characteristics

Symbol	Parameter	Value	Unit
Θ_{JA}	**Thermal resistance junction-ambient** LQFP 64 - 10 × 10 mm / 0.5 mm pitch	45	°C/W
	Thermal resistance junction-ambient WLCSP64+2 - 0.400 mm pitch	51	
	Thermal resistance junction-ambient LQFP100 - 14 × 14 mm / 0.5 mm pitch	46	
	Thermal resistance junction-ambient LQFP144 - 20 × 20 mm / 0.5 mm pitch	40	
	Thermal resistance junction-ambient LQFP176 - 24 × 24 mm / 0.5 mm pitch	38	
	Thermal resistance junction-ambient UFBGA176 - 10× 10 mm / 0.5 mm pitch	39	

Reference document

JESD51-2 Integrated Circuits Thermal Test Method Environment Conditions - Natural Convection (Still Air). Available from www.jedec.org.

8 Ordering information

Table 96. Ordering information scheme

Example: STM32 F 205 R E T 6 V xxx

Device family

STM32 = ARM-based 32-bit microcontroller

Product type

F = general-purpose

Device subfamily

205 = STM32F20x, connectivity

207= STM32F20x, connectivity, camera interface, Ethernet

Pin count

R = 64 pins or 66 pins(1)

V = 100 pins

Z = 144 pins

I = 176 pins

Flash memory size

B = 128 Kbytes of Flash memory

C = 256 Kbytes of Flash memory

E = 512 Kbytes of Flash memory

F = 768 Kbytes of Flash memory

G = 1024 Kbytes of Flash memory

Package

T = LQFP

H = UFBGA

Y = WLCSP

Temperature range

6 = Industrial temperature range, –40 to 85 °C.

7 = Industrial temperature range, –40 to 105 °C.

Software option

Internal code or Blank

Options

xxx = programmed parts

TR = tape and reel

1. The 66 pins is available on WLCSP package only.

For a list of available options (speed, package, etc.) or for further information on any aspect of this device, contact your nearest ST sales office.

9 Revision history

Table 97. Document revision history

Date	Revision	Changes
05-Jun-2009	1	Initial release.
09-Oct-2009	2	Document status promoted from Target specification to Preliminary data. In *Table 8: STM32F20x pin and ball definitions*: – Note 4 updated – V_{DD_SA} and V_{DD_3} pins inverted (*Figure 12: STM32F20x LQFP100 pinout*, *Figure 13: STM32F20x LQFP144 pinout* and *Figure 14: STM32F20x LQFP176 pinout* corrected accordingly). *Section : In order to meet environmental requirements, ST offers these devices in different grades of ECOPACK® packages, depending on their level of environmental compliance. ECOPACK® specifications, grade definitions and product status are available at: www.st.com. ECOPACK® is an ST trademark.* changed to LQFP with no exposed pad.
01-Feb-2010	3	LFBGA144 package removed. STM32F203xx part numbers removed. Part numbers with 128 and 256 Kbyte Flash densities added. Encryption features removed. PC13-TAMPER-RTC renamed to PC13-RTC_AF1 and PI8-TAMPER-RTC renamed to PI8-RTC_AF2.
13-Jul-2010	4	Renamed high-speed SRAM, system SRAM. Removed combination: 128 KBytes Flash memory in LQFP144. Added UFBGA176 package. Added note 1 related to LQFP176 package in *Table 2*, *Figure 14*, and *Table 96*. Added information on ART accelerator and audio PLL (PLLI2S). Added *Table 6: USART feature comparison*. Several updates on *Table 8: STM32F20x pin and ball definitions* and *Table 10: Alternate function mapping*. ADC, DAC, oscillator, RTC_AF, WKUP and VBUS signals removed from alternate functions and moved to the “other functions” column in *Table 8: STM32F20x pin and ball definitions*. TRACESWO added in *Figure 4: STM32F20x block diagram*, *Table 8: STM32F20x pin and ball definitions*, and *Table 10: Alternate function mapping*. XTAL oscillator frequency updated on cover page, in *Figure 4: STM32F20x block diagram* and in *Section 3.11: External interrupt/event controller (EXTI)*. Updated list of peripherals used for boot mode in *Section 3.13: Boot modes*. Added Regulator bypass mode in *Section 3.16: Voltage regulator*, and *Section 6.3.4: Operating conditions at power-up / power-down (regulator OFF)*. Updated *Section 3.17: Real-time clock (RTC), backup SRAM and backup registers*. Added *Note Note:* in *Section 3.18: Low-power modes*. Added SPI TI protocol in *Section 3.23: Serial peripheral interface (SPI)*.

Table 97. Document revision history (continued)

Date	Revision	Changes
13-Jul-2010	4 (continued)	Added USB OTG_FS features in *Section 3.28: Universal serial bus on-the-go full-speed (OTG_FS)*. Updated V_{CAP_1} and V_{CAP_2} capacitor value to 2.2 µF in *Figure 19: Power supply scheme*. Removed DAC, modified ADC limitations, and updated I/O compensation for 1.8 to 2.1 V range in *Table 15: Limitations depending on the operating power supply range*. Added V_{BORL}, V_{BORM}, V_{BORH} and I_{RUSH} in *Table 19: Embedded reset and power control block characteristics*. Removed table Typical current consumption in Sleep mode with Flash memory in Deep power down mode. Merged typical and maximum current consumption sections and added *Table 21: Typical and maximum current consumption in Run mode, code with data processing running from Flash memory (ART accelerator disabled)*, *Table 20: Typical and maximum current consumption in Run mode, code with data processing running from Flash memory (ART accelerator enabled) or RAM, Table 22: Typical and maximum current consumption in Sleep mode, Table 23: Typical and maximum current consumptions in Stop mode, Table 24: Typical and maximum current consumptions in Standby mode*, and *Table 25: Typical and maximum current consumptions in VBAT mode*. Update *Table 34: Main PLL characteristics* and added *Section 6.3.11: PLL spread spectrum clock generation (SSCG) characteristics*. Added *Note 8* for CIO in *Table 48: I/O AC characteristics*. Updated *Section 6.3.18: TIM timer characteristics*. Added T_{NRST_OUT} in *Table 49: NRST pin characteristics*. Updated *Table 52: I2C characteristics*. Removed 8-bit data in and data out waveforms from *Figure 48: ULPI timing diagram*. Removed note related to ADC calibration in *Table 67*. *Section 6.3.20: 12-bit ADC characteristics*: ADC characteristics tables merged into one single table; tables ADC conversion time and ADC accuracy removed. Updated *Table 68: DAC characteristics*. Updated *Section 6.3.22: Temperature sensor characteristics* and *Section 6.3.23: VBAT monitoring characteristics*. Update *Section 6.3.26: Camera interface (DCMI) timing specifications*. Added *Section 6.3.27: SD/SDIO MMC card host interface (SDIO) characteristics*, and *Section 6.3.28: RTC characteristics*. Added *Section 7.7: Thermal characteristics*. Updated *Table 91: LQFP176 - Low profile quad flat package 24 × 24 × 1.4 mm package mechanical data* and *Figure 86: LQFP176 - Low profile quad flat package 24 × 24 × 1.4 mm, package outline*. Changed tape and reel code to TX in *Table 96: Ordering information scheme*. Added *Table 101: Main applications versus package for STM32F2xxx microcontrollers*. Updated figures in Appendix *A.2: USB OTG full speed (FS) interface solutions* and *A.3: USB OTG high speed (HS) interface solutions*. Updated *Figure 94: Audio player solution using PLL, PLLI2S, USB and 1 crystal* and *Figure 95: Audio PLL (PLLI2S) providing accurate I2S clock*.

Table 97. Document revision history (continued)

Date	Revision	Changes
25-Nov-2010	5	Update I/Os in *Section : Features*. Added WLCSP64+2 package. Added note 1 related to LQFP176 on cover page. Added trademark for ART accelerator. Updated *Section 3.2: Adaptive real-time memory accelerator (ART Accelerator™)*. Updated *Figure 5: Multi-AHB matrix*. Added case of BOR inactivation using IRROFF on WLCSP devices in *Section 3.15: Power supply supervisor*. Reworked *Section 3.16: Voltage regulator* to clarify regulator off modes. Renamed PDROFF, IRROFF in the whole document. Added *Section 3.19: VBAT operation*. Updated LIN and IrDA features for UART4/5 in *Table 6: USART feature comparison*. *Table 8: STM32F20x pin and ball definitions*: Modified V_{DD_3} pin, and added note related to the FSMC_NL pin; renamed BYPASS-REG REGOFF, and add IRROFF pin; renamed USART4/5 UART4/5. USART4 pins renamed UART4. Changed V_{SS_SA} to V_{SS}, and V_{DD_SA} pin reserved for future use. Updated maximum HSE crystal frequency to 26 MHz. *Section 6.2: Absolute maximum ratings*: Updated V_{IN} minimum and maximum values and note related to five-volt tolerant inputs in *Table 11: Voltage characteristics*. Updated $I_{INJ(PIN)}$ maximum values and related notes in *Table 12: Current characteristics*. Updated V_{DDA} minimum value in *Table 14: General operating conditions*. Added Note 2 and updated Maximum CPU frequency in *Table 15: Limitations depending on the operating power supply range*, and added *Figure 21: Number of wait states versus fCPU and VDD range*. Added brownout level 1, 2, and 3 thresholds in *Table 19: Embedded reset and power control block characteristics*. Changed f_{OSC_IN} maximum value in *Table 30: HSE 4-26 MHz oscillator characteristics*. Changed f_{PLL_IN} maximum value in *Table 34: Main PLL characteristics*, and updated jitter parameters in *Table 35: PLLI2S (audio PLL) characteristics*. *Section 6.3.16: I/O port characteristics*: updated V_{IH} and V_{IL} in *Table 48: I/O AC characteristics*. Added *Note 1* below *Table 47: Output voltage characteristics*. Updated R_{PD} and R_{PU} parameter description in *Table 57: USB OTG FS DC electrical characteristics*. Updated V_{REF+} minimum value in *Table 66: ADC characteristics*. Updated *Table 71: Embedded internal reference voltage*. Removed Ethernet and USB2 for 64-pin devices in *Table 101: Main applications versus package for STM32F2xxx microcontrollers*. Added *A.2: USB OTG full speed (FS) interface solutions*, removed “OTG FS connection with external PHY” figure, updated *Figure 87*, *Figure 88*, and *Figure 90* to add STULPI01B.

Table 97. Document revision history (continued)

Date	Revision	Changes
22-Apr-2011	6	Changed datasheet status to “Full Datasheet”. Introduced concept of SRAM1 and SRAM2. LQFP176 package now in production and offered only for 256 Kbyte and 1 Mbyte devices. Availability of WLCSP64+2 package limited to 512 Kbyte and 1 Mbyte devices. Updated *Figure 3: Compatible board design between STM32F10x and STM32F2xx for LQFP144 package* and *Figure 2: Compatible board design between STM32F10x and STM32F2xx for LQFP100 package*. Added camera interface for STM32F207Vx devices in *Table 2: STM32F205xx features and peripheral counts*. Removed 16 MHz internal RC oscillator accuracy in *Section 3.12: Clocks and startup*. Updated *Section 3.16: Voltage regulator*. Modified I^2S sampling frequency range in *Section 3.12: Clocks and startup*, *Section 3.24: Inter-integrated sound (I2S)*, and *Section 3.30: Audio PLL (PLLI2S)*. Updated *Section 3.17: Real-time clock (RTC), backup SRAM and backup registers* and description of TIM2 and TIM5 in *Section 3.20.2: General-purpose timers (TIMx)*. Modified maximum baud rate (oversampling by 16) for USART1 in *Table 6: USART feature comparison*. Updated note related to RFU pin below *Figure 12: STM32F20x LQFP100 pinout*, *Figure 13: STM32F20x LQFP144 pinout*, *Figure 14: STM32F20x LQFP176 pinout*, *Figure 15: STM32F20x UFBGA176 ballout*, and *Table 8: STM32F20x pin and ball definitions*. In *Table 8: STM32F20x pin and ball definitions*,:changed I2S2_CK and I2S3_CK to I2S2_SCK and I2S3_SCK, respectively; added PA15 and TT (3.6 V tolerant I/O). Added RTC_50Hz as PB15 alternate function in *Table 8: STM32F20x pin and ball definitions* and *Table 10: Alternate function mapping*. Removed ETH _RMII_TX_CLK for PC3/AF11 in *Table 10: Alternate function mapping*. Updated *Table 11: Voltage characteristics* and *Table 12: Current characteristics*. T_{STG} updated to –65 to +150 in *Table 13: Thermal characteristics*. Added CEXT, ESL, and ESR in *Table 14: General operating conditions* as well as *Section 6.3.2: VCAP1/VCAP2 external capacitor*. Modified *Note 4* in *Table 15: Limitations depending on the operating power supply range*. Updated *Table 17: Operating conditions at power-up / power-down (regulator ON)*, and *Table 18: Operating conditions at power-up / power-down (regulator OFF)*. Added OSC_OUT pin in *Figure 17: Pin loading conditions*. and *Figure 18: Pin input voltage*. Updated *Figure 19: Power supply scheme* to add IRROFF and REGOFF pins and modified notes. Updated V_{PVD}, V_{BOR1}, V_{BOR2}, V_{BOR3}, $T_{RSTTEMPO}$ typical value, and I_{RUSH}, added E_{RUSH} and *Note 2* in *Table 19: Embedded reset and power control block characteristics*.

Table 97. Document revision history (continued)

Date	Revision	Changes
22-Apr-2011	6 (continued)	Updated *Typical and maximum current consumption* conditions, as well as *Table 21: Typical and maximum current consumption in Run mode, code with data processing running from Flash memory (ART accelerator disabled)* and *Table 20: Typical and maximum current consumption in Run mode, code with data processing running from Flash memory (ART accelerator enabled) or RAM*. Added *Figure 23*, *Figure 24*, *Figure 25*, and *Figure 26*. Updated *Table 22: Typical and maximum current consumption in Sleep mode*, and added *Figure 27* and *Figure 28*. Updated *Table 23: Typical and maximum current consumptions in Stop mode*. Added *Figure 29: Typical current consumption vs. temperature in Stop mode*. Updated *Table 24: Typical and maximum current consumptions in Standby mode* and *Table 25: Typical and maximum current consumptions in VBAT mode*. Updated *On-chip peripheral current consumption* conditions and *Table 26: Peripheral current consumption*. Updated $t_{WUSTDBY}$ and t_{WUSTOP}, and added *Note 3* in *Table 27: Low-power mode wakeup timings*. Maximum f_{HSE_ext} and minimum $t_{w(HSE)}$ values updated in *Table 28: High-speed external user clock characteristics*. Updated C and g_m in *Table 30: HSE 4-26 MHz oscillator characteristics*. Updated R_F, I_2, g_m, and $t_{su(LSE)}$ in *Table 31: LSE oscillator characteristics (fLSE = 32.768 kHz)*. Added *Note 1* and updated ACC_{HSI}, $IDD_{(HSI}$, and $t_{su(HSI)}$ in *Table 32: HSI oscillator characteristics*. Added *Figure 34: ACCHSI versus temperature*. Updated f_{LSI}, $t_{su(LSI)}$ and $IDD_{(LSI)}$ in *Table 33: LSI oscillator characteristics*. Added *Figure 35: ACCLSI versus temperature* *Table 34: Main PLL characteristics*: removed note 1, updated t_{LOCK}, jitter, $IDD_{(PLL)}$ and $IDD_{A(PLL)}$, added *Note 2* for f_{PLL_IN} minimum and maximum values. *Table 35: PLLI2S (audio PLL) characteristics*: removed note 1, updated t_{LOCK}, jitter, $IDD_{(PLLI2S)}$ and $IDD_{A(PLLI2S)}$, added *Note 2* for f_{PLLI2S_IN} minimum and maximum values. Added *Note 1* in *Table 36: SSCG parameters constraint*. Updated *Table 37: Flash memory characteristics*. Modified *Table 38: Flash memory programming* and added *Note 2* for t_{prog}. Updated t_{prog} and added *Note 1* in *Table 39: Flash memory programming with VPP*. Modified *Figure 40: Recommended NRST pin protection*. Updated *Table 42: EMI characteristics* and EMI monitoring conditions in *Section : Electromagnetic Interference (EMI)*. Added *Note 2* related to $V_{ESD(HBM)}$in *Table 43: ESD absolute maximum ratings*. Updated *Table 48: I/O AC characteristics*. Added *Section 6.3.15: I/O current injection characteristics*. Modified maximum frequency values and conditions in *Table 48: I/O AC characteristics*. Updated $t_{res(TIM)}$ in *Table 50: Characteristics of TIMx connected to the APB1 domain*. Modified $t_{res(TIM)}$ and f_{EXT} *Table 51: Characteristics of TIMx connected to the APB2 domain*.

Table 97. Document revision history (continued)

Date	Revision	Changes
22-Apr-2011	6 (continued)	Changed $t_{w(SCKH)}$ to $t_{w(SCLH)}$, $t_{w(SCKL)}$ to $t_{w(SCLL)}$, $t_{r(SCK)}$ to $t_{r(SCL)}$, and $t_{f(SCK)}$ to $t_{f(SCL)}$ in *Table 52: I2C characteristics* and in *Figure 41: I2C bus AC waveforms and measurement circuit*. Added *Table 57: USB OTG FS DC electrical characteristics* and updated *Table 58: USB OTG FS electrical characteristics*. Updated V_{DD} minimum value in *Table 62: Ethernet DC electrical characteristics*. Updated *Table 66: ADC characteristics* and R_{AIN} equation. Updated R_{AIN} equation. Updated *Table 68: DAC characteristics*. Updated t_{START} in *Table 69: Temperature sensor characteristics*. Updated R typical value in *Table 70: VBAT monitoring characteristics*. Updated *Table 71: Embedded internal reference voltage*. Modified FSMC_NOE waveform in *Figure 57: Asynchronous non-multiplexed SRAM/PSRAM/NOR read waveforms*. Shifted end of FSMC_NEx/NADV/addresses/NWE/NOE/NWAIT of a half FSMC_CLK period, changed $t_{d(CLKH-NExH)}$) to $t_{d(CLKL-NExH)}$, $t_{d(CLKH-AIV)}$ to $t_{d(CLKL-AIV)}$, $t_{d(CLKH-NOEH)}$ to $t_{d(CLKL-NOEH)}$, and $t_{d(CLKH-NWEH)}$ to $t_{d(CLKL-NWEH)}$, and updated data latency from 1 to 0 in *Figure 61: Synchronous multiplexed NOR/PSRAM read timings*, *Figure 62: Synchronous multiplexed PSRAM write timings*, *Figure 63: Synchronous non-multiplexed NOR/PSRAM read timings*, and *Figure 64: Synchronous non-multiplexed PSRAM write timings*, Changed $t_{d(CLKH-NExH)}$) to $t_{d(CLKL-NExH)}$, $t_{d(CLKH-AIV)}$ to $t_{d(CLKL-AIV)}$, $t_{d(CLKH-NOEH)}$ to $t_{d(CLKL-NOEH)}$, $t_{d(CLKH-NWEH)}$ to $t_{d(CLKL-NWEH)}$, and modified $t_{w(CLK)}$ minimum value in *Table 76*, *Table 77*, *Table 78*, and *Table 79*. Updated note 2 in *Table 72*, *Table 73*, *Table 74*, *Table 75*, *Table 76*, *Table 77*, *Table 78*, and *Table 79*. Modified $t_{h(NIOWR-D)}$ in *Figure 70: PC Card/CompactFlash controller waveforms for I/O space write access*. Modified FSMC_NCEx signal in *Figure 71: NAND controller waveforms for read access*, *Figure 72: NAND controller waveforms for write access*, *Figure 73: NAND controller waveforms for common memory read access*, and *Figure 74: NAND controller waveforms for common memory write access* Specified Full speed (FS) mode for *Figure 89: USB OTG HS peripheral-only connection in FS mode* and *Figure 90: USB OTG HS host-only connection in FS mode*.

Table 97. Document revision history (continued)

Date	Revision	Changes
14-Jun-2011	7	Added SDIO in *Table 2: STM32F205xx features and peripheral counts*. Updated V_{IN} for 5V tolerant pins in *Table 11: Voltage characteristics*. Updated jitter parameters description in *Table 34: Main PLL characteristics*. Remove jitter values for system clock in *Table 35: PLLI2S (audio PLL) characteristics*. Updated *Table 42: EMI characteristics*. Update *Note 2* in *Table 52: I2C characteristics*. Updated Avg_Slope typical value and T_{S_temp} minimum value in *Table 69: Temperature sensor characteristics*. Updated T_{S_vbat} minimum value in *Table 70: VBAT monitoring characteristics*. Updated $T_{S_vrefint}$ minimum value in *Table 71: Embedded internal reference voltage*. Added Software option in *Section 8: Ordering information*. In *Table 101: Main applications versus package for STM32F2xxx microcontrollers*, renamed USB1 and USB2, USB OTG FS and USB OTG HS, respectively; and removed USB OTG FS and camera interface for 64-pin package; added USB OTG HS on 64-pin package; added *Note 1* and *Note 2*.
20-Dec-2011	8	Updated SDIO register addresses in *Figure 16: Memory map*. Updated *Figure 3: Compatible board design between STM32F10x and STM32F2xx for LQFP144 package*, *Figure 2: Compatible board design between STM32F10x and STM32F2xx for LQFP100 package*, *Figure 1: Compatible board design between STM32F10x and STM32F2xx for LQFP64 package*, and added *Figure 4: Compatible board design between STM32F10xx and STM32F2xx for LQFP176 package*. Updated *Section 3.3: Memory protection unit*. Updated *Section 3.6: Embedded SRAM*. Updated *Section 3.28: Universal serial bus on-the-go full-speed (OTG_FS)* to remove external FS OTG PHY support. In *Table 8: STM32F20x pin and ball definitions*: changed SPI2_MCK and SPI3_MCK to I2S2_MCK and I2S3_MCK, respectively. Added ETH _RMII_TX_EN alternate function to PG11. Added EVENTOUT in the list of alternate functions for I/O pin/balls. Removed OTG_FS_SDA, OTG_FS_SCL and OTG_FS_INTN alternate functions. In *Table 10: Alternate function mapping*: changed I2S3_SCK to I2S3_MCK for PC7/AF6, added FSMC_NCE3 for PG9, FSMC_NE3 for PG10, and FSMC_NCE2 for PD7. Removed OTG_FS_SDA, OTG_FS_SCL and OTG_FS_INTN alternate functions. Changed I2S3_SCK into I2S3_MCK for PC7/AF6. Updated peripherals corresponding to AF12. Removed CEXT and ESR from *Table 14: General operating conditions*.

Table 97. Document revision history (continued)

Date	Revision	Changes
20-Dec-2011	8 (continued)	Added maximum power consumption at T_A=25 °C in *Table 23: Typical and maximum current consumptions in Stop mode*. Updated md minimum value in *Table 36: SSCG parameters constraint*. Added examples in *Section 6.3.11: PLL spread spectrum clock generation (SSCG) characteristics*. Updated *Table 54: SPI characteristics* and *Table 55: I2S characteristics*. Updated *Figure 48: ULPI timing diagram* and *Table 61: ULPI timing*. Updated *Table 63: Dynamics characteristics: Ethernet MAC signals for SMI*, *Table 64: Dynamics characteristics: Ethernet MAC signals for RMII*, and *Table 65: Dynamics characteristics: Ethernet MAC signals for MII*. *Section 6.3.25: FSMC characteristics*: updated *Table 72* to*Table 83*, changed C_L value to 30 pF, and modified FSMC configuration for asynchronous timings and waveforms. Updated *Figure 62: Synchronous multiplexed PSRAM write timings*. Updated*Table 84: DCMI characteristics*. Updated *Table 92: UFBGA176+25 - ultra thin fine pitch ball grid array 10 × 10 × 0.6 mm mechanical data*. Updated *Table 96: Ordering information scheme*. Appendix *A.2: USB OTG full speed (FS) interface solutions*: updated *Figure 87: USB OTG FS (full speed) host-only connection* and added *Note 2*, updated *Figure 88: OTG FS (full speed) connection dual-role with internal PHY* and added *Note 3* and *Note 4*, modified *Figure 89: OTG HS (high speed) device connection, host and dual-role in high-speed mode with external PHY* and added *Note 2*. Appendix *A.3: USB OTG high speed (HS) interface solutions*: removed figures *USB OTG HS device-only connection in FS mode* and *USB OTG HS host-only connection in FS mode,* updated *Figure 89: OTG HS (high speed) device connection, host and dual-role in high-speed mode with external PHY*. Added Appendix *A.4: Ethernet interface solutions*. Updated disclaimer on last page.
24-Apr-2012	9	Updated V_{DD} minimum value in *Section 2: Description*. Updated number of USB OTG HS and FS, modified packages for STM32F207Ix part numbers, added *Note 1* related to FSMC and *Note 2* related to SPI/I2S, and updated *Note 3* in *Table 2: STM32F205xx features and peripheral counts* and *Table 3: STM32F207xx features and peripheral counts*. Added *Note 2* and update TIM5 in *Figure 4: STM32F20x block diagram*. Updated maximum number of maskable interrupts in *Section 3.10: Nested vectored interrupt controller (NVIC)*. Updated V_{DD} minimum value in *Section 3.14: Power supply schemes*. Updated *Note a* in *Section 3.16.1: Regulator ON*. Removed STM32F205xx in *Section 3.28: Universal serial bus on-the-go full-speed (OTG_FS)*.

Table 97. Document revision history (continued)

Date	Revision	Changes
24-Apr-2012	9 (continued)	Removed support of I2C for OTG PHY in *Section 3.29: Universal serial bus on-the-go high-speed (OTG_HS)*. Removed OTG_HS_SCL, OTG_HS_SDA, OTG_FS_INTN in *Table 8: STM32F20x pin and ball definitions* and *Table 10: Alternate function mapping*. Renamed PH10 alternate function into TIM5_CH1 in *Table 10: Alternate function mapping*. Added *Table 9: FSMC pin definition*. Updated *Note 1* in *Table 14: General operating conditions*, *Note 2* in *Table 15: Limitations depending on the operating power supply range*, and *Note 1* below *Figure 21: Number of wait states versus fCPU and VDD range*. Updated $V_{POR/PDR}$ in *Table 19: Embedded reset and power control block characteristics*. Updated typical values in *Table 24: Typical and maximum current consumptions in Standby mode* and *Table 25: Typical and maximum current consumptions in VBAT mode*. Updated *Table 30: HSE 4-26 MHz oscillator characteristics* and *Table 31: LSE oscillator characteristics (fLSE = 32.768 kHz)*. Updated *Table 37: Flash memory characteristics*, *Table 38: Flash memory programming*, and *Table 39: Flash memory programming with VPP*. Updated *Section : Output driving current*. Updated *Note 3* and removed note related to minimum hold time value in *Table 52: I2C characteristics*. Updated *Table 64: Dynamics characteristics: Ethernet MAC signals for RMII*. Updated *Note 1*, C_{ADC}, I_{VREF+}, and I_{VDDA} in *Table 66: ADC characteristics*. Updated *Note 3* and note concerning ADC accuracy vs. negative injection current in *Table 67: ADC accuracy*. Updated *Note 1* in *Table 68: DAC characteristics*. Updated *Section Figure 88.: UFBGA176+25 - ultra thin fine pitch ball grid array 10 × 10 × 0.6 mm, package outline*. Appendix *A.1: Main applications versus package*: removed number of address lines for FSMC/NAND in *Table 101: Main applications versus package for STM32F2xxx microcontrollers*. Appendix *A.4: Ethernet interface solutions*: updated *Figure 92: Complete audio player solution 1* and *Figure 93: Complete audio player solution 2*.

Table 97. Document revision history (continued)

Date	Revision	Changes
29-Oct-2012	10	Changed minimum supply voltage from 1.65 to 1.8 V. Updated number of AHB buses in *Section 2: Description* and *Section 3.12: Clocks and startup*. Removed Figure 4. Compatible board design between STM32F10xx and STM32F2xx for LQFP176 package. Updated *Note 2* below *Figure 4: STM32F20x block diagram*. Changed System memory to System memory + OTP in *Figure 16: Memory map*. Added *Note 1* below *Table 16: VCAP1/VCAP2 operating conditions*. Updated V_{DDA} and V_{REF+} decoupling capacitor in *Figure 19: Power supply scheme* and updated *Note 3*. Changed simplex mode into half-duplex mode in *Section 3.24: Inter-integrated sound (I2S)*. Replaced DAC1_OUT and DAC2_OUT by DAC_OUT1 and DAC_OUT2, respectively.Changed TIM2_CH1/TIM2_ETR into TIM2_CH1_ETR for PA0 and PA5 in *Table 10: Alternate function mapping*. Updated note applying to I_{DD} (external clock and all peripheral disabled) in *Table 21: Typical and maximum current consumption in Run mode, code with data processing running from Flash memory (ART accelerator disabled)*. Updated *Note 3* below *Table 22: Typical and maximum current consumption in Sleep mode*. Removed f_{HSE_ext} typical value in *Table 28: High-speed external user clock characteristics*. Updated master I2S clock jitter conditions and values in *Table 35: PLLI2S (audio PLL) characteristics*. Updated equations in *Section 6.3.11: PLL spread spectrum clock generation (SSCG) characteristics*. Swapped TTL and CMOS port conditions for V_{OL} and V_{OH} in *Table 47: Output voltage characteristics*. Updated $V_{IL(NRST)}$ and $V_{IH(NRST)}$ in *Table 49: NRST pin characteristics*. Updated *Table 54: SPI characteristics* and *Table 55: I2S characteristics*. Removed note 1 related to measurement points below *Figure 43: SPI timing diagram - slave mode and CPHA = 1*, *Figure 44: SPI timing diagram - master mode*, and *Figure 45: I2S slave timing diagram (Philips protocol)(1)*. Updated t_{HC} in *Table 61: ULPI timing*. Updated *Figure 49: Ethernet SMI timing diagram*, *Table 63: Dynamics characteristics: Ethernet MAC signals for SMI* and *Table 65: Dynamics characteristics: Ethernet MAC signals for MII*. Update f_{TRIG} in *Table 66: ADC characteristics*. Updated I_{DDA} description in *Table 68: DAC characteristics*. Updated note below *Figure 54: Power supply and reference decoupling (VREF+ not connected to VDDA)* and *Figure 55: Power supply and reference decoupling (VREF+ connected to VDDA)*.

Table 97. Document revision history (continued)

Date	Revision	Changes
29-Oct-2012	10 (continued)	Replaced $t_{d(CLKL-NOEL)}$ by $t_{d(CLKH-NOEL)}$ in *Table 76: Synchronous multiplexed NOR/PSRAM read timings*, *Table 78: Synchronous non-multiplexed NOR/PSRAM read timings*, *Figure 61: Synchronous multiplexed NOR/PSRAM read timings* and *Figure 63: Synchronous non-multiplexed NOR/PSRAM read timings*. Added *Figure 87: LQFP176 recommended footprint*. Added *Note 2* below *Figure 86: Regulator OFF/internal reset ON*. Updated device subfamily in *Table 96: Ordering information scheme*. Remove reference to note 2 for USB IOTG FS in *Table 101: Main applications versus package for STM32F2xxx microcontrollers*.

Table 97. Document revision history (continued)

Date	Revision	Changes
04-Nov-2013	11	In the whole document, updated notes related to WLCSP64+2 usage with IRROFF set to V_{DD}. Updated *Section 3.14: Power supply schemes*, *Section 3.15: Power supply supervisor*, *Section 3.16.1: Regulator ON* and *Section 3.16.2: Regulator OFF*. Added *Section 3.16.3: Regulator ON/OFF and internal reset ON/OFF availability*. Added note related to WLCSP64+2 package. Restructured RTC features and added reference clock detection in *Section 3.17: Real-time clock (RTC), backup SRAM and backup registers*. Added note indicating the package view below *Figure 10: STM32F20x LQFP64 pinout*, *Figure 12: STM32F20x LQFP100 pinout*, *Figure 13: STM32F20x LQFP144 pinout*, and *Figure 14: STM32F20x LQFP176 pinout*. Added *Table 7: Legend/abbreviations used in the pinout table*. *Table 8: STM32F20x pin and ball definitions*: content reformatted; removed indexes on V_{SS} and V_{DD}; updated PA4, PA5, PA6, PC4, BOOT0; replaced DCMI_12 by DCMI_D12, TIM8_CHIN by TIM8_CH1N, ETH_MII_RX_D0 by ETH_MII_RXD0, ETH_MII_RX_D1 by ETH_MII_RXD1, ETH_RMII_RX_D0 by ETH_RMII_RXD0, ETH_RMII_RX_D1 by ETH_RMII_RXD1, and RMII_CRS_DV by ETH_RMII_CRS_DV. *Table 10: Alternate function mapping*: replaced FSMC_BLN1 by FSMC_NBL1, added EVENTOUT as AF15 alternated function for PC13, PC14, PC15, PH0, PH1, and PI8. Updated *Figure 17: Pin loading conditions* and *Figure 18: Pin input voltage*. Added V_{IN} in *Table 14: General operating conditions*. Removed note applying to $V_{POR/PDR}$ minimum value in *Table 19: Embedded reset and power control block characteristics*. Updated notes related to C_{L1} and C_{L2} in *Section : Low-speed external clock generated from a crystal/ceramic resonator*. Updated conditions in *Table 41: EMS characteristics*. Updated *Table 42: EMI characteristics*. Updated V_{IL}, V_{IH} and V_{Hys} in *Table 46: I/O static characteristics*. Added *Section : Output driving current*and updated *Figure 39: I/O AC characteristics definition*. Updated $V_{IL(NRST)}$ and $V_{IH(NRST)}$ in *Table 49: NRST pin characteristics*, updated *Figure 39: I/O AC characteristics definition*. Removed tests conditions in *Section : I2C interface characteristics*. Updated *Table 52: I2C characteristics* and *Figure 41: I2C bus AC waveforms and measurement circuit*. Updated I_{VREF+} and I_{VDDA} in *Table 66: ADC characteristics*. Updated Offset comments in *Table 68: DAC characteristics*. Updated minimum $t_{h(CLKH-DV)}$ value in *Table 78: Synchronous non-multiplexed NOR/PSRAM read timings*.

Table 97. Document revision history (continued)

Date	Revision	Changes
04-Nov-2013	11 (continued)	Removed Appendix A Application block diagrams. Updated *Figure 77: LQFP64 – 10 x 10 mm 64 pin low-profile quad flat package outline* and *Table 87: LQFP64 – 10 x 10 mm 64 pin low-profile quad flat package mechanical data*. Updated *Figure 80: LQFP100, 14 x 14 mm 100-pin low-profile quad flat package outline*, *Figure 83: LQFP144, 20 x 20 mm, 144-pin low-profile quad flat package outline*, *Figure 86: LQFP176 - Low profile quad flat package 24 × 24 × 1.4 mm, package outline*. Updated *Figure 88: UFBGA176+25 - ultra thin fine pitch ball grid array 10 × 10 × 0.6 mm, package outline* and *Figure 88: UFBGA176+25 - ultra thin fine pitch ball grid array 10 × 10 × 0.6 mm, package outline*.
27-Oct-2014	12	Updated V_{BAT} voltage range in *Figure 19: Power supply scheme*. Added caution note in *Section 6.1.6: Power supply scheme*. Updated V_{IN} in *Table 14: General operating conditions*. Removed note 1 in *Table 23: Typical and maximum current consumptions in Stop mode*. Updated *Table 45: I/O current injection susceptibility*, *Section 6.3.16: I/O port characteristics* and *Section 6.3.17: NRST pin characteristics*. Removed note 3 in *Table 69: Temperature sensor characteristics*. Updated *Figure 79: WLCSP64+2 - 0.400 mm pitch wafer level chip size package outline* and *Table 88: WLCSP64+2 - 0.400 mm pitch wafer level chip size package mechanical data*. Added *Figure 83: LQFP100 marking (package top view)* and *Figure 86: LQFP144 marking (package top view)*.
2-Feb-2016	13	Updated *Section 1: Introduction*. Updated *Table 32: HSI oscillator characteristics* and its footnotes. Updated *Figure 36: PLL output clock waveforms in center spread mode*, *Figure 37: PLL output clock waveforms in down spread mode*, *Figure 54: Power supply and reference decoupling (VREF+ not connected to VDDA)* and *Figure 55: Power supply and reference decoupling (VREF+ connected to VDDA)*. Updated *Section 7: Package information* and its subsections.
24-Jun-2016	14	Updated figures *1*, *2* and *3* in *Section 2.1: Full compatibility throughout the family*. Updated *Device marking* and *Figure 83* in *Section 7.3: LQFP100 package information*. Updated *Device marking* and *Figure 86* in *Section 7.4: LQFP144 package information*. Updated *Section 7.6: UFBGA176+25 package information* with introduction of *Device marking* and *Figure 91*. Updated *Table 96: Ordering information scheme*.
11-Aug-2016	15	Updated *Features*, *Section 7.2: WLCSP64+2 package information* and title of *Section 8: Ordering information*. Updated *Figure 54: Power supply and reference decoupling (VREF+ not connected to VDDA)*.

IMPORTANT NOTICE – PLEASE READ CAREFULLY

STMicroelectronics NV and its subsidiaries (“ST”) reserve the right to make changes, corrections, enhancements, modifications, and improvements to ST products and/or to this document at any time without notice. Purchasers should obtain the latest relevant information on ST products before placing orders. ST products are sold pursuant to ST’s terms and conditions of sale in place at the time of order acknowledgement.

Purchasers are solely responsible for the choice, selection, and use of ST products and ST assumes no liability for application assistance or the design of Purchasers’ products.

No license, express or implied, to any intellectual property right is granted by ST herein.

Resale of ST products with provisions different from the information set forth herein shall void any warranty granted by ST for such product.

ST and the ST logo are trademarks of ST. All other product or service names are the property of their respective owners.

Information in this document supersedes and replaces information previously supplied in any prior versions of this document.

© 2016 STMicroelectronics – All rights reserved