OriginGPS
mini+mighty

ORG4600-MK01 (SPIDER)

L1 & L5 GNSS Receiver Module

DATASHEET

OriginGPS.com

sales@prom-elec.com / ООО ПРОМЭЛЕКТРОНИКА

TABLE OF CONTENTS

1. About Spider Family 10
2. About ORG4600-MK01 Module 11
3. About OriginGPS....12
4. Description 13
   4.1. Features....13
   4.2. Architecture....14
   4.3. ORG4600-MK01 Features Description 17
      4.3.1. Assisted GPS (AGPS) 17
      4.3.2. Differential GNSS(DGNSS)....18
      4.3.3. Power Management Modes 18
      4.3.4. Configuration Settings 19
5. Pad Assignments 21
6. Mechanical Specifications....23
7. Electrical Specifications 24
   7.1. Absolute Maximum Ratings....24
   7.2. Recommended Operating Conditions....25
8. Performance 26
   8.1. Acquisition Time 26
      8.1.1. Hot Start....26
      8.1.2. Signal Reacquisition....26
      8.1.3. Aided Start....26
      8.1.4. Warm Start 26
      8.1.5. Cold Start 26
   8.2. Sensitivity....27
      8.2.1. Tracking 27
      8.2.2. Reacquisition....27
      8.2.3. Navigation 27
      8.2.4. Hot Start....27
      8.2.5. Aided Start....27
      8.2.6. Cold Start 27
   8.3. Received Signal Strength....27
   8.4. Position Accuracy....28
   8.5. Dynamic Constraints 28
9. Control Interface 29
   9.1. Power Supply 29
      9.1.1. Nominal VCC = 2-5.5V....29

9.1.2. Ground 29
9.1.3. V_Option 30
9.2. Interface 31
9.2.1. UART- Host Interface 31
9.2.2. Data Interface 31
10. Typical Application Circuit 34
11. Recommended PCB Layout 35
11.1. Footprint 35
11.2. Host PCB 36
11.3. RF Trace 36
11.4. PCB Stack-Up 36
11.5. PCB Layout Restrictions 37
12. Design Considerations 38
12.1. Antenna 38
12.1.1. Passive Antenna 38
12.1.2. Active Antenna 38
12.2. RF 38
13. Firmware Updates 39
14. Handling Information 40
14.1. Moisture Sensitivity 40
14.2. Assembly 40
14.3. Soldering 40
14.4. Cleaning 41
14.5. Rework 41
14.6. Safety Information 41
14.7. Disposal Information 41
15. Compliance 42
16. Packaging And Delivery 43
16.1. Appearance 43
16.2. Carrier Tape 44
16.3. Reel 45
17. Ordering Information 46
18. OriginGPS Proprietary Protocol Commands 47

LIST OF FIGURES

Figure 1. ORG4600-MK01 Architecture 14
Figure 2. AG3335M System Block Diagram and Peripheral 15
Figure 3.Periodic mode power consumption 20
Figure 4. Periodic mode command structure 20
Figure 5. Periodic mode time parameters 20
Figure 6. ORG4600-MK01 Top View 22
Figure 7. Mechanical Drawing 23
Figure 8.Reference Diagram for V_Option 30
Figure 9.1PPS timing 32
Figure 10. Reference Schematic Diagram 34
Figure 11. Footprint 35
Figure 12. Host PCB 36
Figure 13. Typical Microstrip PCB Trace On FR-4 Substrate 36
Figure 14. Typical PCB Stack-Up 36
Figure 15. Recommended Soldering Profile 40
Figure 16. Module Position 43
Figure 17. Carrier Tape 44
Figure 18. Reel 45
Figure 19. Ordering Options 46

LIST OF TABLES

Table 1. Pin Out 21
Table 2. Mechanical Dimensions – Summary 23
Table 3. Absolute Maximum Ratings 24
Table 4. Recommended Operating Conditions 25
Table 5. Acquisition Time 26
Table 6. Received Signal Strength 27
Table 7. ORG4600-MK01 Position Accuracy 28
Table 8. Dynamic Constraints 28
Table 9. Soldering Profile Parameters 41
Table 10. Reel Quantity 43
Table 11. Carrier Tape Dimensions 44
Table 12. Reel Dimensions 45
Table 13. Orderable Devices 46

ABBREVIATIONS

Abbreviation	Description
A-GPS	Assisted GPS
AC	Alternating Current
ADC	Analog to Digital Converter
AGC	Automatic Gain Control
BPF	Band Pass Filter
C/N0	Carrier to Noise density ratio [dB-Hz]
CDM	Charged Device Model
CE	European Community conformity mark
CEP	Circular Error Probability
CMOS	Complementary Metal-Oxide Semiconductor
CPU	Central Processing Unit
CTS	Clear-To-Send
CW	Continuous Wave
DC	Direct Current
DOP	Dilution Of Precision
DR	Dead Reckoning
DSP	Digital Signal Processor
ECEF	Earth-Centered Earth-Fixed
ECHA	European Chemical Agency
EGNOS	European Geostationary Navigation Overlay Service
EIA	Electronic Industries Alliance
EMC	Electro-Magnetic Compatibility
EMI	Electro-Magnetic Interference
ENIG	Electroless Nickel Immersion Gold
ESD	Electro-Static Discharge
ESR	Equivalent Series Resistance
EU	European Union
EVB	Evaluation Board
EVK	Evaluation Kit
FCC	Federal Communications Commission
FSM	Finite State Machine
GAGAN	GPS Aided Geo-Augmented Navigation
GNSS	Global Navigation Satellite System
GPIO	General Purpose Input or Output
GPS	Global Positioning System
HBM	Human Body Model
HDOP	Horizontal Dilution Of Precision
I2C	Inter-Integrated Circuit
I/O	Input or Output
IC	Integrated Circuit

Abbreviation	Description
ICD	Interface Control Document
IF	Intermediate Frequency
ISO	International Organization for Standardization
JEDEC	Joint Electron Device Engineering Council KA (Keep Alive)
KF	Kalman Filter
LDO	Low Dropout regulator
LGA	Land Grid Array
LNA	Low Noise Amplifier
LP	Low Power
LS	Least Squares
LSB	Least Significant Bit
MID	Message Identifier
MM	Machine Model
MSAS	Multi-functional Satellite Augmentation System
MSB	Most Significant Bit
MSL	Moisture Sensitivity Level
NFZ™	Noise-Free Zones System
NMEA	National Marine Electronics Association
NVM	Non-Volatile Memory
PCB	Printed Circuit Board
PLL	Phase Lock Loop
PMU	Power Management Unit
POR	Power-On Reset
PPS	Pulse Per Second
PRN	Pseudo-Random Noise
PSRR	Power Supply Rejection Ratio
PTF™	Push-To-Fix
QZSS	Quasi-Zenith Satellite System
RAM	Random Access Memory
REACH	Registration, Evaluation, Authorization and Restriction of Chemical substances
RF	Radio Frequency
RHCP	Right-Hand Circular Polarized
RMS	Root Mean Square
RoHS	Restriction of Hazardous Substances directive
ROM	Read-Only Memory
RTC	Real-Time Clock
RTS	Ready-To-Send
SAW	Surface Acoustic Wave
SBAS	Satellite-Based Augmentation Systems
SID	Sub-Identifier
SIP	System In Package
SMD	Surface Mounted Device

Abbreviation	Description
SMPS	Switched Mode Power Supply
SMT	Surface-Mount Technology
SOC	System On Chip
SPI	Serial Peripheral Interface
SV	Satellite Vehicle
TCXO	Temperature-Compensated Crystal Oscillator
TTFF	Time To First Fix
TTL	Transistor-Transistor Logic
UART	Universal Asynchronous Receiver/Transmitter
VCCI	Voluntary Control Council for Interference by information technology equipment
VEP	Vertical Error Probability
VGA	Variable-Gain Amplifier
WAAS	Wide Area Augmentation System

Related Documentation

№	Document Name
1	ORG4600-MK01 Evaluation Kit Datasheet

Revision History

Revision	Date	Change Description	Author
1.0	2-Jan-2023	Preliminary datasheet as specification for product tests and goals	Orel Nimni

Scope

This document describes the features and specifications of the ORG4600-MK01 GNSS receiver module.

Disclaimer

All trademarks are properties of their respective owners.

Performance characteristics listed in this document do not constitute a warranty or guarantee of product performance. OriginGPS assumes no liability or responsibility for any claims or damages arising out of the use of this document, or from the use of integrated circuits based on this document.

OriginGPS assumes no liability or responsibility for unintentional inaccuracies or omissions in this document.

OriginGPS reserves the right to make changes in its products, specifications, and other information at any time without notice.

OriginGPS reserves the right to conduct, from time to time, and at its sole discretion, firmware (FW) upgrades. If those FW improvements have no material change on end customers, a PCN may not be issued.

OriginGPS navigation products are not recommended to use in life-saving or life-sustaining applications.

Safety Information

Improper handling or misuse of the product can cause permanent damage.

This product is an electronic sensitive device (ESD) and must be handled with care.

Disposal Information

This product must not be treated as household waste.

For more detailed information about recycling electronic components, contact your local waste-management authority.

Contact Information

contactus@origingps.com www.origingps.com

1. About Spider Family

OriginGPS GNSS receiver modules have been designed to address markets where size, weight, stand-alone operation, high levels of integration, power consumption, and design flexibility are all of the utmost importance. The OriginGPS Spider family breaks the size barrier, offering the industry's smallest fully-integrated, highly-sensitive GPS / GNSS modules.

Spider modules feature OriginGPS proprietary NFZ™ technology for high sensitivity and noise immunity even under marginal signal condition commonly found in urban canyons, under dense foliage, or when the receiver's position in space changes rapidly.

The Spider family enables the shortest TTM (Time-to-Market) with minimal design risks. Just connect an antenna and power supply on a 2-layer PCB and you're good to go.

2. About ORG4600-MK01 Module

The OR4600 module is a complete SiP that features a miniature LGA SMT footprint designed to commit unique integration features for high volume, cost sensitive applications.

Designed to support compact and traditional applications such as smart watches, wearable devices, asset trackers, the ORG4600-MK01 module is a miniature, multi-channel GPS, Galileo and GLONASS, BeiDou, QZSS, IRNSS (NAVIC) in both the L1/B1/E1 and L5/E5a overlay systems receiver that continuously tracks all satellites in view, providing real-time positioning data in industry's standard NMEA format.

The ORG4600-MK01 module offers superior sensitivity and outstanding performance, achieving rapid TTFF in less than one second with an accuracy of approximately one meter and tracking sensitivity of -165dBm.

With a size of only 10mm x 10mm, the ORG4600-MK01 module is industry's smallest-sized, record-breaking solution.

The ORG4600-MK01 is ideal for applications requiring RTK solution or high accuracy in though conditions. It is the industry's smallest dual-frequency GNSS module based on 12nm technology.

An integrated GNSS SoC incorporates a high-performance microprocessor and sophisticated firmware that keeps positioning payload off the host, enabling integration in embedded solutions with low computing resources.

Innovative architecture can detect changes in context, temperature, and satellite signals to achieve a state of near continuous availability by maintaining and opportunistically updating its internal fine time, frequency, and satellite ephemeris data while consuming mere microwatts of battery power.

3. ABOUT ORIGINGPS

OriginGPS is a world leading designer, manufacturer, and supplier of miniature positioning modules, antenna modules, antenna solutions, and IoT devices.

OriginGPS develops fully integrated, miniaturized GPS/GNSS and integrated IoT solutions for developers. OriginGPS modules introduce unparalleled sensitivity and noise immunity by incorporating Noise-Free-Zone system (NFZ™) proprietary technology for faster position fixing and navigation stability even under challenging satellite signal conditions.

Founded in 2006, OriginGPS specializes in developing unique technologies that miniaturize RF modules, thereby addressing the market need for smaller wireless solutions. For over a decade, our experts have been developing ultra-sensitive, reliable, high performance modules with the smallest footprint on the market, supporting a range of categories, such as asset tracking, fleet management, industrial IoT, law enforcement, pet/people tracking, precise agriculture, smart cities, sports and wearables.

4. DESCRIPTION

4.1. Features

The ORG4600-MK01 module includes the following features.

- Autonomous and Standalone operation
- OriginGPS Noise Free Zone System (NFZ™) technology
- Uses simultaneously GPS, Galileo, GLONASS, BeiDou, SBAS, QZSS, and IRNSS (NAVIC) both in L1/B1/E1 and L5/E5a
- Concurrent tracking of multiple constellations
- 135 search channels and more than 55 simultaneous tracking channels
- Ultra-high sensitivity down to -165dBm
- High accuracy of 1m@CEP
- Time service application, PPS vs NMEA feature
- Advanced software features – AGNSS, EPO, LOCUS, and more
- Indoor and outdoor multi-path detection and compensation
- Active Interference Cancellation of 12 different signals
- Jamming Detection and Scanning
- Active or Passive antenna support
- Fully integrated dual-stage LNA, Diplexer Filter, TCXO, RTC, GNSS SoC, LDO, RF shield, and PMU
- 4MB built-in flash
- Power management modes: Sleep, HW RTC, and SW RTC
- NMEA and RAW Data output with PAIR commands over UART and I2C
- High update messages rate of up to 10Hz
- Variable voltage supply 2-5.5V input
- Ultra-small LGA footprint of 10mm x 10mm
- Ultra-low weight of 0.4g
- Surface Mount Device (SMD)
- Optimized for automatic assembly and reflow equipment
- Operating temperatures from -40°C to +85°C
- RED compliant (TBD)
- RoHS III certificate (TBD)
- REACH compliant

4.2. Architecture

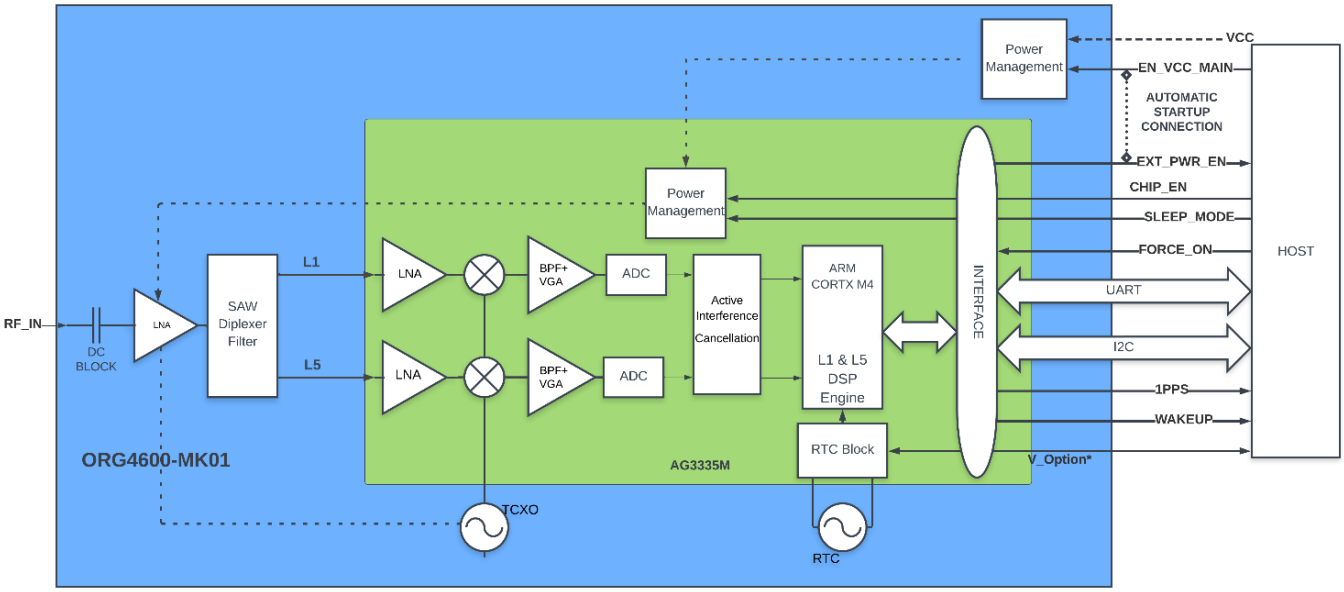

Figure 1. ORG4600-MK01 Architecture

The ORG4600-MK01 module includes the following main components.

- **GNSS Diplexer SAW Filter**

  Band-Pass SAW diplexer filter (L1&L5) eliminates out-of-band signals that may interfere with GNSS reception. The GNSS SAW filter is optimized for low Insertion Loss in GNSS band and low Return Loss outside of it.

- **GNSS LNA**

  Dual stage cascaded LNAs amplify GNSS signals to meet RF down converter input threshold.

  Noise Figure optimized design was implemented to provide maximum sensitivity.

- **TCXO**

  Highly stable 26MHz oscillator controls the down conversion process in the RF block of the GNSS SoC.

  Characteristics of this component are important factors for higher sensitivity, shorter TTFF, and improved navigation stability.

- **RTC Crystal**

  The RTC 32.768 KHz quartz crystal with very tight specifications is required to maintain Hot Start and Warm Start capabilities of the module.

- **RF Shield**

  The RF enclosure avoids external interference from compromising sensitive circuitry inside the module.

  The RF shield also blocks the module's internal high frequency emissions from being radiated.

- **Internal LDO**

  The LDO provides a regulated voltage supply over a wide input voltage range, with low quiescent current and high PSRR.

- **Flash**

  A 4MB built-in flash that boots firmware from the flash for independent operation.

- **AG3335M GNSS SoC**

  The chip is a dual-band multi-GNSS System on Chip designed by AIROHA.

  This is a hybrid positioning processor that combines L1 and L5 GPS, Galileo, GLONASS, BeiDou, QZSS, and IRNSS (NAVIC) to provide a high-performance navigation solution.

  The AG3335M is a full SoC that incorporates GNSS RF, GNSS baseband, integrated navigation solution software, ARM Cortex-M4 with floating point unit, low latency RAM, in chip power managing unit and serial flash.

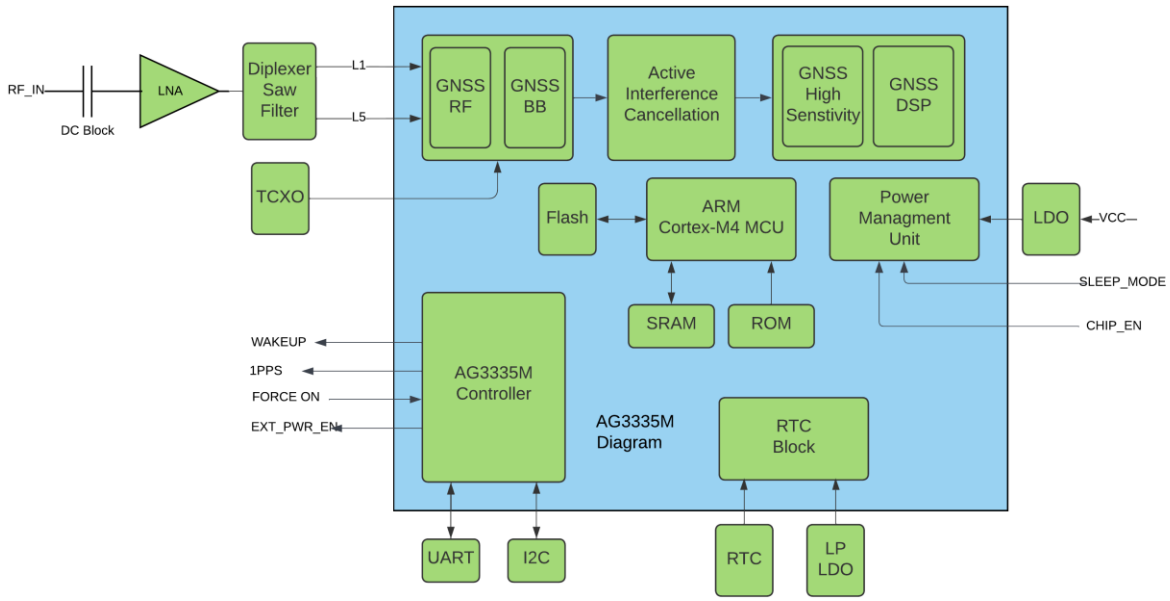

Figure 2. AG3335M System Block Diagram and Peripheral

The AG3335M SoC includes the following units:

- GNSS radio subsystem containing dual receive paths for concurrent multi-channel GPS, Galileo and GLONASS, BeiDou, SBAS, QZSS, IRNSS (NAVIC) in both the L1/B1/E1 and L5/E5a, mixer with current mode interface between the mixer and multi-modes low pass filter, fractional-N synthesizer, integrated self-calibrating filters, IF VGA with AGC, and high-sample rate ADCs with adaptive dynamic range.
- Measurement subsystem including a DSP core for GNSS signals acquisition and tracking, interference scanner and detector, interference removers, multipath, dedicated DSP code ROM, and DSP cache SRAM Measurement subsystem interfaces a GNSS radio subsystem.
- Navigation subsystem comprising an ARM Cortex-M4 microprocessor system for position, velocity and time solution, program ROM, data SRAM, and flash.
- Peripheral Controller subsystem containing UART Host interface, I2C, RTC block, wake up signal option, ADC and PWM.
- Peripheral Controller subsystem that interfaces with the navigation subsystem, PLL, and PMU subsystems.
- Navigation subsystem that interfaces with the measurement subsystem.
- PMU subsystem containing voltage regulators for RF and baseband domains.

4.3. ORG4600-MK01 Features Description

4.3.1. Assisted GPS (AGPS)

Assisted GPS (or Aided GPS) is a method by which TTFF is reduced using information from a source other than broadcast GPS signals. The necessary ephemeris data is calculated either by the receiver itself (locally generated ephemeris) or a server (server-generated ephemeris) and stored in the module. ORG4600-MK01 has EPO and HotStill technology to allow for Hot Starts even in weak signal conditions and moving start-ups. EPO (Extended Prediction Orbit) is one of Airoha's innovative proprietary off-line server based AGPS solution. Host could use an application to store and load the EPO files into device. With multi-constellation EPO, the user experience will be enhanced by the improved Time To First Fix (TTFF) and better first fix accuracy.

4.3.1.1. Server-generated AGPS (Extended Prediction Orbit – EPO)

The AGPS (EPO™) supply the predicated Extended Prediction Orbit data to speed TTFF ,users can download the EPO data to GNSS engine from the FTP server by internet or wireless network ,the GNSS engine will use the EPO data to assist position calculation when the navigation information of satellites are not enough or weak signal zone . Host could use an application to store and load the EPO files into device. With multi- Constellation EPO, the user experience will be enhanced by the improved Time To First Fix (TTFF) and better first fix accuracy. The predicted ephemeris file is obtained from the AGPS server and is injected into the module over UART. These predictions do not require local broadcast ephemeris collection, and they are valid for up to 14 days.

4.3.1.2. HotStill

HotStill is one of the ORG4600-MK01 innovative features and an off-line client-based A-GPS solution. It could greatly accelerate the TTFF (Time to First Fix) performance in urban canyon or weak signal environments from several minutes to only few seconds. HotStill works as a background software running on the host processor, predicting satellite orbit navigation data (i.e., HotStill data) based on the received GPS L1 broadcast ephemeris. The advantages of the HotStill function are that it does not need to connect to the network and the number of days of the prediction is 3~7 days. Using the HotStill feature, the previous decoded ephemeris data and the corresponding predicted data must be stored in the host's memory. Therefore, HotStill is not suitable for standalone designs.

4.3.2. Differential GNSS(DGNSS)

Differential GNSS application is utilizing the information from GNSS augmented systems or ground station network to enhance the performance of primary GNSS constellations. Collecting the correction information from the broadcast navigation message of the augmented systems or ground stations, the receiver integrates the correction data with estimation methodology to improve the accuracy of the position-related information. The ORG4600-MK01 modules support the differential GNSS applications, which are Satellite Based Augmentation System (SBAS), Radio Technical Commission for Maritime Services (RTCM), and Sub-meter Level Augmentation Service (SLAS). The following sections describe the DGNSS applications adopted by the module.

4.3.2.1. QZSS /- Quasi-Zenith Satellite System

The three satellites of the Japanese SBAS are in a highly inclined elliptical orbit which is geosynchronous (not geostationary) and has analemma-like ground tracks. This orbit provides continuous coverage over Japan using only three satellites. Their primary purpose is to provide augmentation to the GPS system, but the signals may also be used for ranging. NMEA reporting for QZSS may be enabled/disabled by the user.

4.3.2.2. Satellite-Based Augmentation System (SBAS)

The ORG4600MK-01 receiver is capable of using Satellite-Based Augmentation System (SBAS) satellites as a source of both differential corrections and satellite range measurements. These systems (WAAS, EGNOS, MSAS, and GAGAN) use geostationary satellites to transmit regional differential corrections via a GNSS-compatible signal. The use of SBAS corrections can significantly improve position accuracy by providing corrections for the largest error sources, e.g., the ionospheric delay and satellite time/clock error.

4.3.3. Power Management Modes

The ORG4600-MK01 supports operational modes that enable them to provide positioning information at reduced overall current consumption. Availability of GNSS signals in the operating environment is also a factor in the choice of power management modes. The designer can choose a mode that provides the best trade-off for performance versus power consumption.

The power management modes are described below, and can be enabled by command:

- Full Power Continuous - for optimal GNSS performance.
- Power Save modes to optimize power consumption.

Please see below more information about the options.

4.3.3.1. Full Power Continuous Mode

The modules start up in full power continuous mode. This mode uses the acquisition engine at full performance resulting in the shortest possible TTFF and the highest sensitivity. It searches for all possible satellites. The receiver then switches to the tracking engine to lower the power consumption when:

- A valid GPS/GNSS position is obtained.
- The ephemeris for each satellite in view is valid.

4.3.3.2. RTC Mode

RTC mode is another way to further save power. It shuts down all the systems, including the GNSS engine and the internal processing units, expect a dedicated low power RTC block. When the processing units go into RTC mode, PAIR commands cannot be sent and the GNSS engine no longer provides position-related information. Most importantly, the navigation data, which includes ephemeris, almanac, location, and time, which are used to facilitate the TTFF performance will be

saved to RTCRAM for the next navigation.

Entering RTC mode can be done by either a PAIR command (SW RTC Mode), that could be time specific, or when the module is disconnected from the main power by switching the “EN_VCC_MAIN” to Low level (HW RTC Mode).

The module can be woken by either setting the RTC timer by PAIR650 command, or by pulling high the FORCE_ON pin. Once the module exits RTC mode all system resources will be re-initialized.

4.3.4. Configuration Settings

Configuration settings are erased when the power is turned off. The

configuration settings can be saved to the internal flash, to be used for the next navigation, using the PAIR513 command (refer to SW manual)

4.3.4.1. Periodic Mode

This mode allows autonomous power on/off with reduced fix rate to reduce average power consumption. In periodic mode, the main power supply VCC is still powered, but power distribution to internal circuits is controlled by the receiver. The periodic mode consists of the running and sleeping stages. In the running stage, the GNSS module provides the position-related information while keeping in the lower power consumption status in the sleeping stage.

The time span of the running stage can be changed dynamically or be strictly limited. To improve the TTFF performance after waking up from the sleeping stage, the module will adopt the way for changing the time span of the running stage dynamically to get more navigation information.

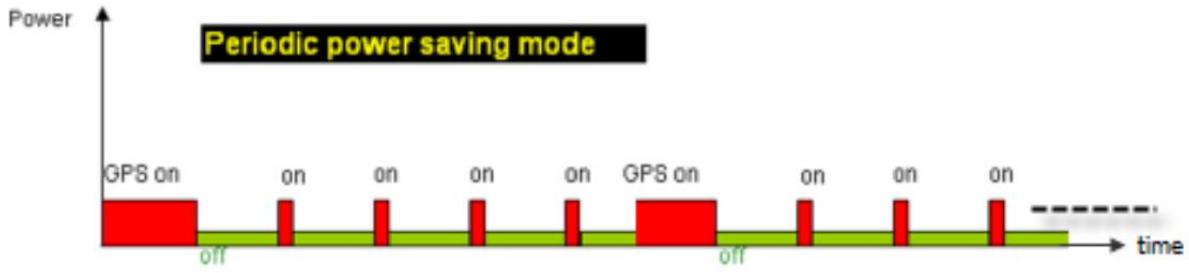

Figure 3.Periodic mode power consumption

Enter periodic mode by sending the following command:

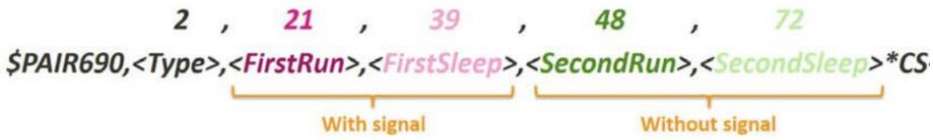

Figure 4. Periodic mode command structure

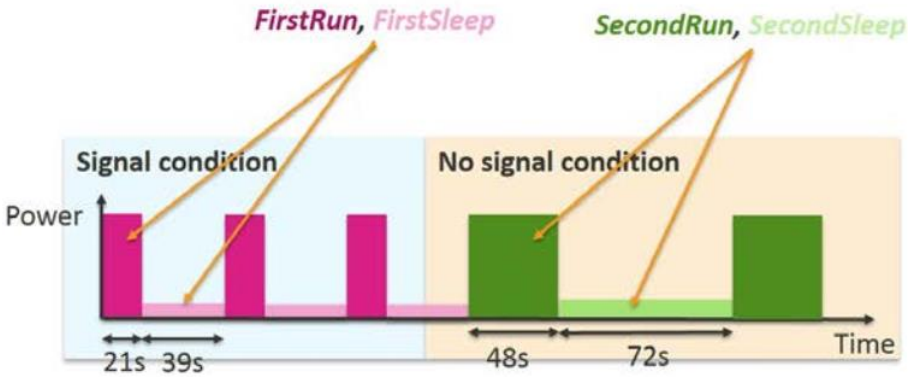

Figure 5. Periodic mode time parameters

Periodic mode is exited back to Full Power Continuous Mode by sending the Pair690,0-disable command. just after the module wakes up from a previous sleep cycle. Any restart will force it to go back to normal mode.

5. PAD ASSIGNMENTS

Table 1. Pin Out

Pad	Name	Function	Direction	Logic level
1	V_Option	MK01 = VRTC MK03 = 2.8V IO Level	Power Output/Input	
2	UART0_TX	UART0 Transmit (Serial Output)	Output	1.8V/2.8V
3	UART0_RX	UART0 Receive (Serial Input)	Input	1.8V/2.8V
4	EN_VCC_MAIN	Enables main power	Input	1.8V
5	EXT_PWR_EN	Control external power source	Output	1.8V
6	SLEEP_MODE	TBD	Output/Input	1.8V
7	GND	System Ground	Power	
8	GND	System Ground	Power	
9	RF L1/L5	RF Input	Input	50Ω
10	GND	System Ground	Power	
11	RESERVED	Future Use RF Input	Input	50Ω
12	GND	System Ground	Power	
13	GND	System Ground	Power	
14	WAKEUP	TBD	Output/Input	1.8V
15	ADC1	TBD	Input	
16	PWM1	TBD	Output	1.8V/2.8V
17	CHIP_EN	System Reset	Input	1.8V
18	FORCE_ON	Forced full-power mode signal	Input	1.8V
19	1PPS	UTC Time Mark	Output	1.8V
20	GND	System Ground	Power	
21	SDA	I2C Data	Bi-directional	1.8V/2.8V
22	V_{CC}	System Power Input	Power	
23	SCL	I2C Clock	Bi-directional	1.8V/2.8V
24	RESERVED	Future Power Input	Input / NC	
25	GND	System Ground	Power	
26	UART2_RX	UART2 Receive (Serial Input)	Input	1.8V
27	UART2_TX	UART2 Transmit (Serial Output)	Output	1.8V
28	UART1_RX	UART1 Receive (Serial Input)	Input	1.8V
29	UART1_TX	UART1 Transmit (Serial Output)	Output	1.8V

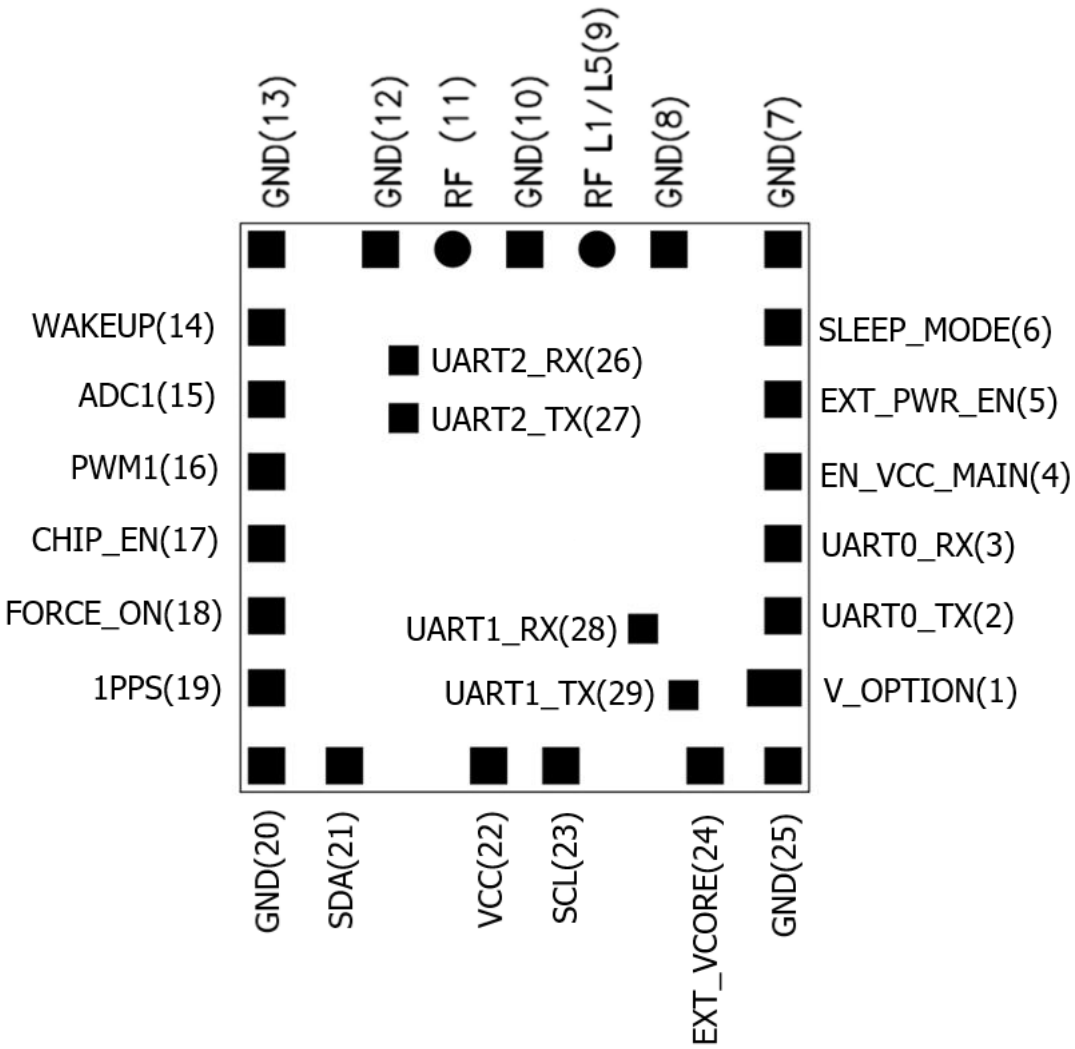

Figure 6. ORG4600-MK01 Top View

6. MECHANICAL SPECIFICATIONS

The mechanical specifications of the ORG4600-MK01 module are listed below.

- The ORG4600-MK01 module has miniature LGA SMD packaging sized 10mm x 10mm.
- The ORG4600-MK01 is built on a PCB assembly enclosed with a metallic RF shield box.
- On the bottom side of the unit there are 29 SMT pads with a base and ENIG plating.
- The ORG4600-MK01 module supports automated pick and place assembly and reflow soldering processes.

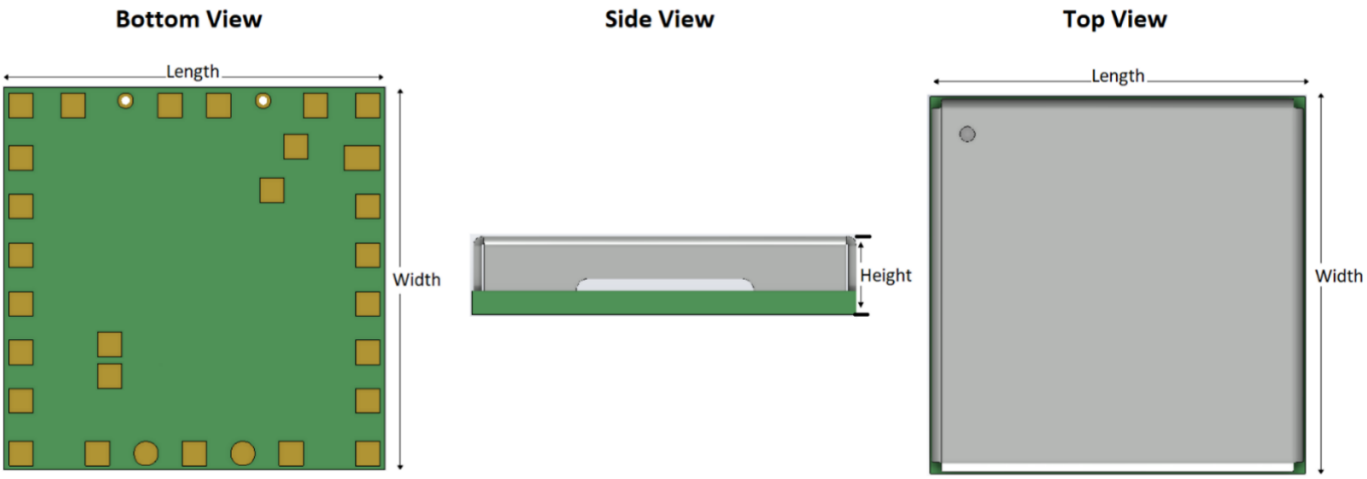

Figure 7. Mechanical Drawing

Table 2. Mechanical Dimensions – Summary

Dimensions	Length	Width	Height	Weight	
mm	10.0 + 0.1 / -0.05	10.2 + 0.1 / -0.05	1.75 + 0.1 / -0.05	gr	0.4
inch	0.394 + 0.004 / -0.002	0.402 + 0.004 / -0.002	0.069 + 0.004 / -0.002	oz	0.014

7. ELECTRICAL SPECIFICATIONS

7.1. Absolute Maximum Ratings

Stresses exceeding Absolute Maximum Ratings may damage the device.

Table 3. Absolute Maximum Ratings

Parameter		Symbol	Min	Max	Unit
Power Supply Voltage		V_{CC}	-0.30	+6	V
Power Supply Current[1]		I_{CC}		200	mA
I/O Voltage		V_{IO} | logic level=1.8V (Type 0)	-0.30	2.1	V
		V_{IO} | logic level=2.8V (Type 1)	-0.30	3.1	V
I/O Source/Sink Current		I_{IO}		12	mA
ESD Voltage		$V_{IO/RF}$, HBM [2]		2000	V
		$V_{IO/RF}$, MM[3]		250	V
RF Power[4]	f_{IN} = 1160MHz÷1630MHz	P_{RF}		+0	dBm
Operating Temperature[5]		T_{AMB}	-45	+85	°C

Notes:

I. Inrush current for about 20µs duration.

II. Human Body Model (HBM) contact discharge per EIA/JEDEC JESD22-A114D. Step: 500V (+/-).

III. Machine Model (MM) contact discharge per EIA/JEDEC JESD22-A115C. Step: 50V (+/-).

IV. Power delivered to antenna element.

V. Lead temperature at 1mm from case for 10s duration.

7.2. Recommended Operating Conditions

Exposure to stresses above Recommended Operating Conditions may affect device reliability.

Table 4. Recommended Operating Conditions

Parameter	Symbol	Mode/Pad	Test Conditions	Min	Typ	Max	Unit
Power supply voltage	V_{CC}	V_{CC}		+2		+5.5	V
Digital IO Pin Low level input voltage	Vil	Type 0 IO Level 1.8V		-0.3	0	+0.63	V
Digital IO Pin High level input voltage	Vih			+1.17	+1.8	+2.1	V
Digital IO Pin Low level output voltage	Vol				0	+0.45	V
Digital IO Pin High level output voltage	Voh			+1.35	+1.8		V
Digital IO Pin Low level input voltage	Vil	Type 1 IO Level 2.8V		-0.3	0	+0.7	V
Digital IO Pin High level input voltage	Vih			+1.75		3.1	V
Digital IO Pin Low level output voltage	Vol				0	+0.35	V
Digital IO Pin High level output voltage	Voh			2.1			V
Power Supply Current[1]	I_{CC}	Acquisition			45		mA
		Tracking			40		mA
		HW RTC	EN_VCC_MAIN = Low level		26		µA
		SW RTC	PAIR command		23		µA
Input Impedance (L1)	Z_{IN}	RF Input	F_{in} = 1575.42MHz		50		Ω
Input Return Loss (L1)	R_{LIN}			-7			dB
Input Impedance (L5)	Z_{IN}		F_{in} = 1176.45MHz		50		Ω
Input Return Loss (L5)	R_{LIN}			-7			dB
Input Power Range	P_{IN}			-167			dBm
Input Frequency Range	f_{IN}			1166		1217	MHz
Input Frequency Range	f_{IN}			1559		1605	MHz
Operating Temperature	T_{AMB}			-40	+25	+85	°C

8. PERFORMANCE

8.1. Acquisition Time

TTFF (Time to First Fix) – is the period of time from the module's power-up until valid position estimation.

8.1.1. Hot Start

Hot Start results either from a software reset after a period of continuous navigation or a return from a short idle period that was preceded by a period of continuous navigation. During Hot Start, all critical data (position, velocity, time, and satellite ephemeris) is valid to the specified accuracy and availability in RAM.

8.1.2. Signal Reacquisition

Reacquisition follows temporary blocking of GNSS signals.

The typical reacquisition scenario includes driving through a tunnel.

8.1.3. Aided Start

Aided Start is a method of effectively reducing TTFF by providing valid satellite ephemeris data. Aiding can be implemented with EPO.

8.1.4. Warm Start

Warm Start typically results from user-supplied position and time initialization data or continuous RTC operation with an accurate last known position available in RAM. In this state position and time data are present and valid, but satellite ephemeris data validity has expired.

8.1.5. Cold Start

Cold Start occurs when satellite ephemeris data, position, and time data are unknown. A typical Cold Start scenario includes a first power application.

Table 5. Acquisition Time

Operation[1]	Value	Unit
Hot Start	< 1	s
Aided Start[2]	< 4	s
Warm Start	< 24	S
Cold Start	< 24	s
Signal Reacquisition[3]	< 4	s

Notes:

I. EVK is 24-hrs. It is static under signal conditions of -130dBm and ambient temperature of +25°C.

II. Tested on the EVB with conducted conditions

III. Outage duration ≤ 30s for reacquisition.

8.2. Sensitivity

8.2.1. Tracking

Tracking is the ability of the receiver to maintain valid satellite ephemeris data.

During tracking, the receiver may stop the output of valid position solutions.

Tracking sensitivity is defined as the minimum GNSS signal power required for tracking.

8.2.2. Reacquisition

Reacquisition follows temporary blocking of GNSS signals.

Reacquisition sensitivity is defined as the minimum GNSS signal power required for reacquisition.

8.2.3. Navigation

During navigation, the receiver consequently outputs valid position solutions.

Navigation sensitivity is defined as the minimum GNSS signal power required for reliable navigation.

8.2.4. Hot Start

Hot Start sensitivity is defined as the minimum GNSS signal power required for a valid position solution under Hot Start conditions.

8.2.5. Aided Start

Aided Start sensitivity is defined as the minimum GNSS signal power required for a valid position solution following the aiding process.

8.2.6. Cold Start

Cold Start sensitivity is defined as the minimum GNSS signal power required for a valid position solution under Cold Start conditions, sometimes referred to as the ephemeris decode threshold.

8.3. Received Signal Strength

Table 6. Received Signal Strength

Parameter	Value	Unit
C/N_0	51	dB-Hz

8.4. Position Accuracy

Table 7. ORG4600-MK01 Position Accuracy

Parameter	67%(m)	CEP (m)
Horizontal Position Accuracy	1.2	1.0

8.5. Dynamic Constraints

Table 8. Dynamic Constraints

Parameter	Metric	Imperial
Velocity	500m/s	971Knots
Altitude	18000m	59055 ft
Acceleration	4g	

Note: Standard dynamic constraints according to regulatory limitations.

9. CONTROL INTERFACE

9.1. Power Supply

It is recommended to keep the power supply on all the time to maintain the RTC block active and keep satellite data in RAM for the fastest possible TTFF. When V_{CC} is removed, settings are reset to the factory default and the receiver performs a Cold Start on the next power up.

9.1.1. Nominal VCC = 2-5.5V

A variable V_{CC} operates from 2V to 5.5V DC and must be provided from a regulated power supply.

During tracking, the processing is less intense compared to acquisition, therefore the power consumption is lower.

Filtering is important in managing high alternating current flows on the power input connection. An additional LC filter on the ORG4600-MK01 power input may be required to reduce system noise.

The high rate of the ORG4600-MK01 input current change requires low ESR bypass capacitors.

Additional higher ESR output capacitors can provide input stability damping.

The ESR and size of the output capacitors directly define the output ripple voltage with a given inductor size. Large low ESR output capacitors are beneficial for low noise.

9.1.2. Ground

Ground pad must be connected to a host PCB Ground with the shortest possible trace or by multiple VIAs.

9.1.3. V_Option

There is an internal BOM option which selects the purpose of "V_Option" pad. By default, in ORG4600MK-01 this line is connected to the RTC domain and can be used for one of the following options:

1) VRTC – an indicator for the RTC block being on and keeping satellite and navigation data in RAM. In this case the voltage will 0.7~0.8V
2) V_backup – connect an external regulated power source of 0.9V in order to keep the RTC block on, to facilitate faster TTFF by keeping satellite and navigation data in RAM, in case of a sudden power down.

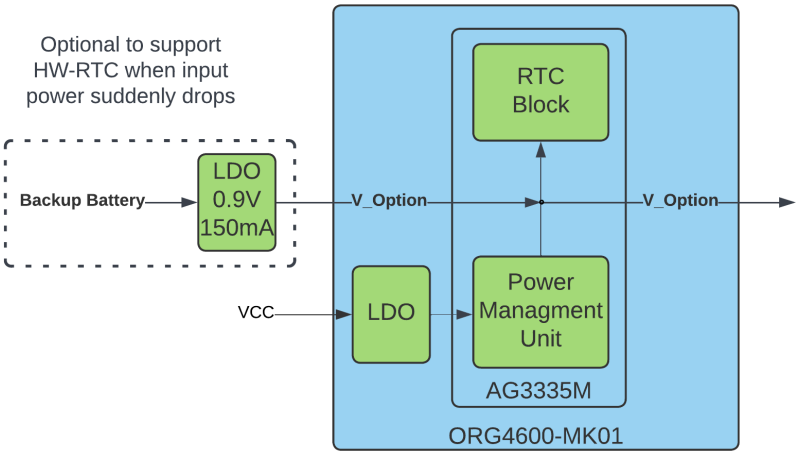

Figure 8.Reference Diagram for V_Option

The other BOM options will make a different part number with the format of ORG4600-MKxy, while "xy" will be selected for each type of BOM option. The other options can make the "V_Option" pad as following

- 1.8V output indication for monitoring the internal 1.8V I/O power supply
- 2.8V input power for making the module as 2.8V I/O level

9.2. Interface

9.2.1. UART- Host Interface

The ORG4600-MK01 has the following standard UART ports:

9.2.1.1. TX

TX is used for GPS data reports. The TX serial data line outputs information in few formats such as NMEA, RAW Data, and more. When no serial data is output, the TX data line idles high.

9.2.1.2. RX

RX is used for receiver control, and FW upgrade. The RX data line accepts information in few formats such as PAIR, RTCM, and more.

9.2.1.3. UART0

UART0 Supports standard NMEA message output, PAIR control commands, Raw data output and FW upgrade.

Supported baud rates: 9600, 19200, 38400, 57600, 115200, 230400, 460800, 921600 and 3000000 bps. HW flow control is not available.

9.2.2. Data Interface

9.2.2.1. EN_VCC_MAIN

EN_VCC_MAIN is an input that is used to enable the module's internal full power LDO. This port is important for the module's start-up process. In order to power up the module properly this port should be raised to High after EXT_PWR_EN port is in high level. EN_VCC_MAIN is also used to switch to HW-RTC mode when the port is pulled down to low level while the module is in run mode.

EN_VCC_MAIN can be controlled by the host to enable full control or connected to EXT_PWR_EN port to enable the module's automatic start-up process however, in this configuration HW RTC mode will not be available.

9.2.2.2. EXT_PWR_EN

EXT_PWR_EN is a software-controlled output signal that is designed to enable an external power source during the chip's power-on sequence. Once VCC is inserted, the chip's RTC block is powered by a low power LDO located inside the module. When the chip's initialization is done and CHIP_EN is in high level, EXT_PWR_EN raised to high to enable an external power source to power the rest of the chip's blocks.

9.2.2.3. 1PPS

Pulse-per-Second (PPS) output provides a pulse signal for timing purposes.

The pulse may be configured for a specific duration, a specific frequency, and phase via a command.

The pulse may vary 30 nS (1 σ). The relationship between the PPS signal and UTC is unspecified.

Use Proprietary PAIR command to enable, configure or disable this functionality.

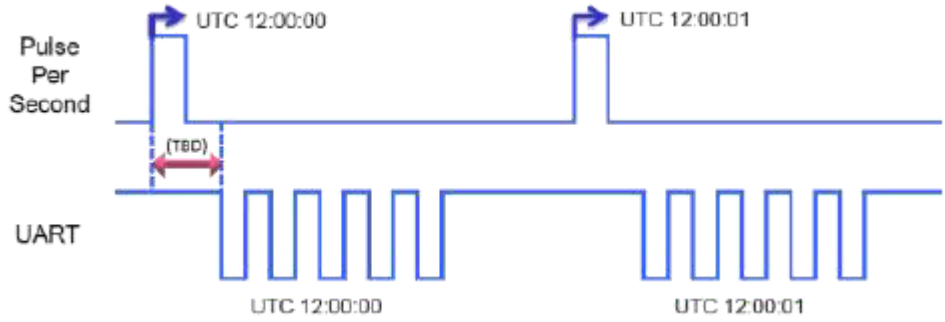

Figure 9.1PPS timing

By default, 1PPS is enabled once 3D fix is obtained. To change 1PPS settings please refer to the SW manual.

9.2.2.4. CHIP_EN

CHIP_EN is an input line that is used to turn off the module and maintain the lowest current consumption possible. As opposed to RTC mode the navigation data, which includes ephemeris, almanac, location, and time, which are used to facilitate the TTFF performance will NOT be saved to RTCRAM for the next navigation.

CHIP_EN is an active low input and pulled to high state internally, i.e., it should be pulled to Low State to turn off the module. This input can be used as a reset input by pulling down the input for at least 100 ms and then releasing it.

9.2.2.5. FORCE-ON

FORCE_ON is an input signal that can be used to wake up the ORG4600-MK01 from a SW RTC mode, either with or without timer, bringing it to Full Power mode. The FORCE_ON line is held in default in a Low-level state due to an internal 100KΩ pull-down resistor.
In order to wake up the module raise FORCE_ON to High level. The user can decide between 2 possible states of the FORCE_ON line:

High State:
*Note - in this state, the module still can enter SW RTC mode, however it will not be the lowest power consumption possible by the module.

There are two options to return to full power mode:

1) Set FORCE_ON to Low State for 1ms and set back to High State.
2) Set FORCE_ON to Low State.

Low State:

There are two options to return to full power mode:

1) Set FORCE_ON to High State for 1ms and set back to Low State.
2) Set FORCE_ON to High State.

10. TYPICAL APPLICATION CIRCUIT

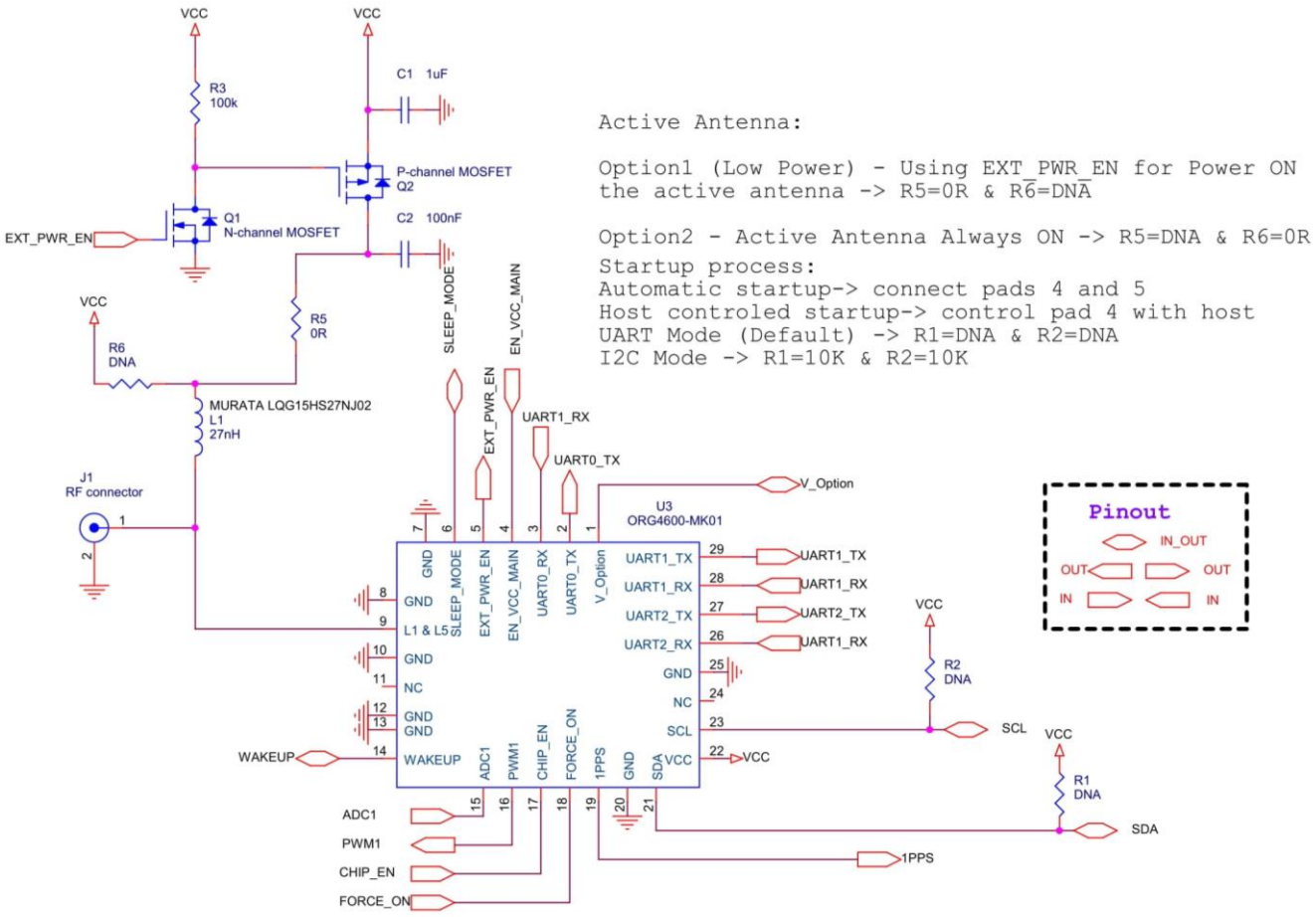

Figure 3. Reference Schematic Diagram

11. RECOMMENDED PCB LAYOUT

11.1. Footprint

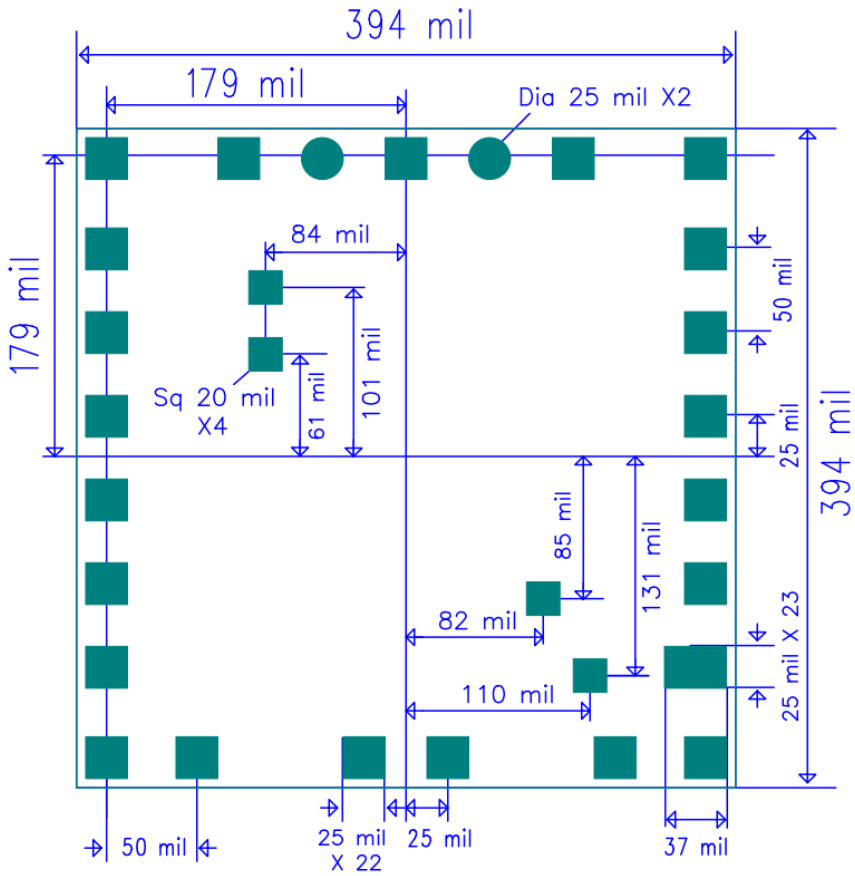

Figure 4. Footprint

Note: A silk print of the module's outline is recommended for SMT visual inspections.

11.2. Host PCB

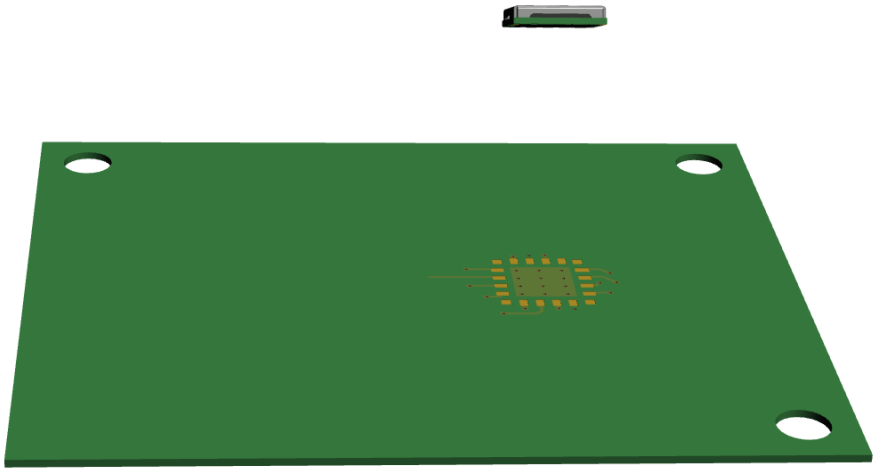

Figure 5. Host PCB

11.3. RF Trace

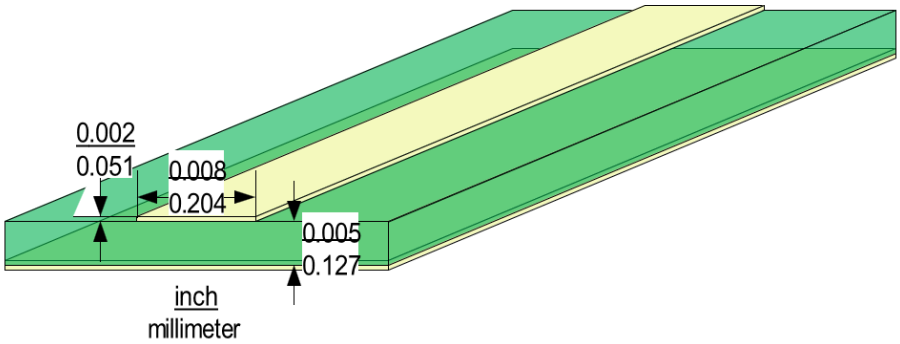

Figure 6. Typical Microstrip PCB Trace On FR-4 Substrate

11.4. PCB Stack-Up

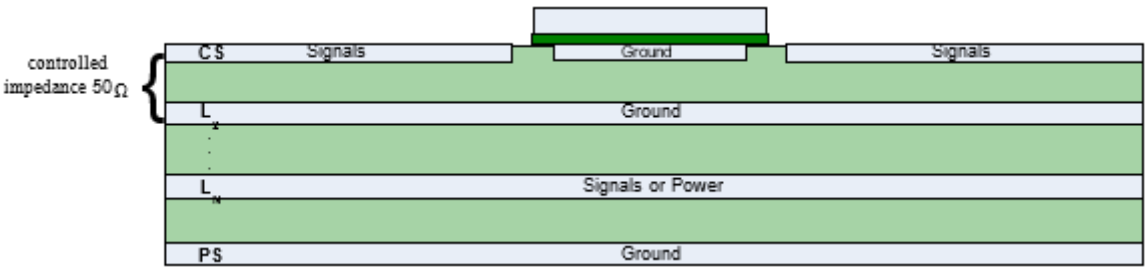

Figure 7. Typical PCB Stack-Up

11.5. PCB Layout Restrictions

Switching and high-speed components, traces, and VIAs must be kept away from the ORG4600-MK01 module. Signal traces to/from module must have minimum length.

Recommended minimal distance from adjacent active components is 3mm.

Ground pads must be connected to the host PCB Ground with the shortest possible traces or VIAs.

In the event of a tight integration constraint or co-location with adjacent high-speed components like CPU or memory, high frequency components like transmitters, clock resonators or oscillators, LCD panels or CMOS image sensors, contact: ContactUs@OriginGPS.com for application specific recommendations.

12. DESIGN CONSIDERATIONS

12.1. Antenna

Antennas for GPS, Galileo, and GLONASS have a wider bandwidth than pure GPS antennas.

Some wideband antennas may not have a good axial ratio to block reflections of RHCP GPS, Galileo, and GLONASS signals. These antennas have lower rejection of multipath reflections and tend to degrade the overall performance of the receiver.

12.1.1. Passive Antenna

Design with a passive antenna requires RF layout skills and can be challenging. For additional information:

contactus@origingps.com www.origingps.com

12.1.2. Active Antenna

While designing with an active antenna, it is worth considering using the EXT_PWR_EN output to control the auxiliary DC bias.

12.2. RF

The ORG4600-MK01 operates with received signal levels down to -165dBm and can be affected by high absolute levels of RF signals, moderate levels of RF interference near the GNSS bands, and by low levels of RF noise in the GNSS band.

RF interference from nearby electronic circuits or radio transmitters can contain enough energy to desensitize ORG4600-MK01. These systems may also produce levels of energy outside of the GNSS band, which are high enough to leak through RF filters and degrade the operation of the radios in ORG4600-MK01.

This issue becomes more critical in small products, where there are industrial design constraints. In those environments, transmitters for Wi-Fi, Bluetooth, RFID, cellular, and other radios may have antennas physically close to the GNSS receiver antenna.

To prevent degraded performance of ORG4600-MK01, OriginGPS recommends performing EMI/jamming susceptibility tests for radiated and conducted noise on prototypes and assessing risks of other factors.

13. FIRMWARE UPDATES

Default FW configuration:

- ✓ Normal mode
- ✓ L1 and L5 Full satellites support
- ✓ Constellation – GPS, Galileo, GLONASS, and BEIDOU
- ✓ Additional Constellation – QZSS and SBAS
- ✓ UART baud rate - 115200 bps
- ✓ PPS enabled by default
- ✓ DCB values configuration
    - GPS = GAL= QZS = -5
    - BDS = -11
- ✓ OriginGPS Proprietary Protocol Commands. (Section 18)

The FW stored in the internal Flash memory may be upgraded.

To update the FW, contact us.

contactus@origingps.com www.origingps.com

14. HANDLING INFORMATION

14.1. Moisture Sensitivity

ORG4600-MK01 modules are MSL 3 designated devices according to the IPC/JEDEC J-STD-033B standard.

Modules in sample or bulk packaging should be baked prior to assembly at 125°C for 48 hours.

14.2. Assembly

The module supports automatic pick-and-place assembly and reflow soldering processes.

Suggested solder paste stencil is 5 mil to ensure sufficient solder volume.

14.3. Soldering

Reflow soldering of the module always on the component side (Top side) of the host PCB according to standard IPC/JEDEC J-STD-020D for LGA SMD.

Avoid exposure of the ORG4600-MK01 to face-down the reflow soldering process.

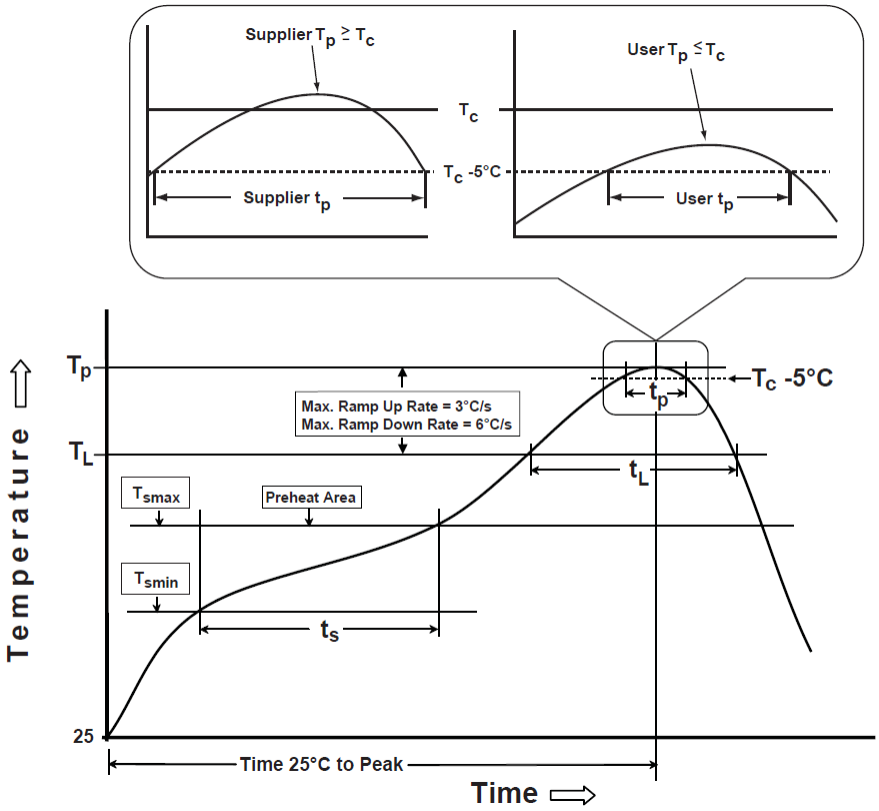

Figure 8. Recommended Soldering Profile

Notes:

I. The referred temperature is measured on the top surface of the package during the entire soldering process.

II. The suggested peak reflow temperature is 245°C for 30 sec. for Pb-Free solder paste.

III. The actual board assembly reflow profile must be developed individually per furnace characteristics.

IV. Reflow furnace settings depend on the number of heating/cooling zones, type of solder paste/flux used, board design, component density, and packages used.

Table 9. Soldering Profile Parameters

Symbol	Parameter	Min	Typ	Max	Unit
T_C	Classification Temperature		245		°C
T_P	Package Temperature			245	°C
T_L	Liquidous Temperature		217		°C
T_S	Soak/Preheat Temperature	150		200	°C
t_S	Soak/Preheat Time	60		120	s
t_L	Liquidous Time	60		150	s
t_P	Peak Time		30		s

14.4. Cleaning

If flux cleaning is required, the module is capable of withstanding a standard cleaning process in a vapor degreaser with Solvon® n-Propyl Bromide (NPB) solvent and/or washing in DI water.

Avoid the cleaning process in an ultrasonic degreaser, since specific vibrations may cause performance degradation or destruction of internal circuitry.

14.5. Rework

If localized heating is required to rework or repair the module, precautionary methods are necessary to avoid exposure to solder reflow temperatures that can result in permanent damage to the device.

14.6. Safety Information

Improper handling and use can cause permanent damage to the product.

This product is ESD sensitive device and must be handled with care.

14.7. Disposal Information

This product must not be treated as household waste.

For more detailed information about recycling electronic components contact your local waste management authority.

15. COMPLIANCE

The following standards are applied on production of ORG4600-MK01 modules:

- ✓ IPC-6011/6012 Class2 for PCB manufacturing
- ✓ IPC-A-600 Class2 for PCB inspection
- ✓ IPC-A-610D Class2 for SMT acceptability

ORG4600-MK01 modules are manufactured in ISO 9001:2008 accredited facilities.

ORG4600-MK01 modules are manufactured in ISO 14001:2004 accredited facilities.

ORG4600-MK01 modules are manufactured in OHSAS 18001:2007 accredited facilities.

ORG4600-MK01 modules are designed, manufactured, and handled in compliance with the Directive 2015/65/EU of the European Parliament and of the Council of June 2011 on the Restriction of the use of certain Hazardous Substances in electrical and electronic equipment, referred to as RoHS III.

ORG4600-MK01 modules are manufactured and handled in compliance with the applicable substance bans as of Annex XVII of Commission Regulation (EU) 2018/1881 on Registration, Evaluation, Authorization, and Restriction of Chemicals including all amendments and candidate list issued by ECHA, referred to as REACH.

ORG4600-MK01 modules are handled in compliance with the EU directive 2014/53/EU) dealing with the placing on the market of radio-electric equipment, as per the EU directive from 13 June 2017.

16. PACKAGING AND DELIVERY

16.1. Appearance

ORG4600-MK01 modules are delivered in reeled tapes for an automatic pick and place assembly process.

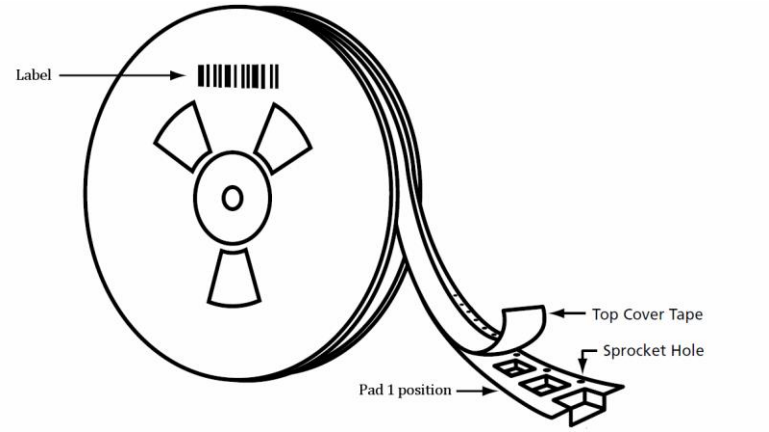

Figure 9. Module Position

ORG4600-M01 modules are packed in two different tape reel quantities.

Table 10. Reel Quantity

Suffix	Tape Reel 1 (TR1)	Tape Reel 2 (TR2)
Quantity	300	1200

Reels are dry-packed with a humidity indicator card and desiccant bag according to the IPC/JEDEC J-STD-033B standard for MSL 3 devices.

Reels are vacuum-sealed inside anti-static moisture barrier bags.

Sealed reels are labeled with MSD stickers providing information about:

- MSL
- Shelf life
- Reflow soldering peak temperature
- Seal date

Sealed reels are packed inside cartons.

Reels, reel packs, and cartons are labeled with sticker providing information about:

- Description
- Part number
- Lot number
- Customer PO number
- Quantity
- Date code

16.2. Carrier Tape

Carrier tape material—polystyrene with carbon (PS+C).

Cover tape material—polyester-based film with heat-activated adhesive coating layer.

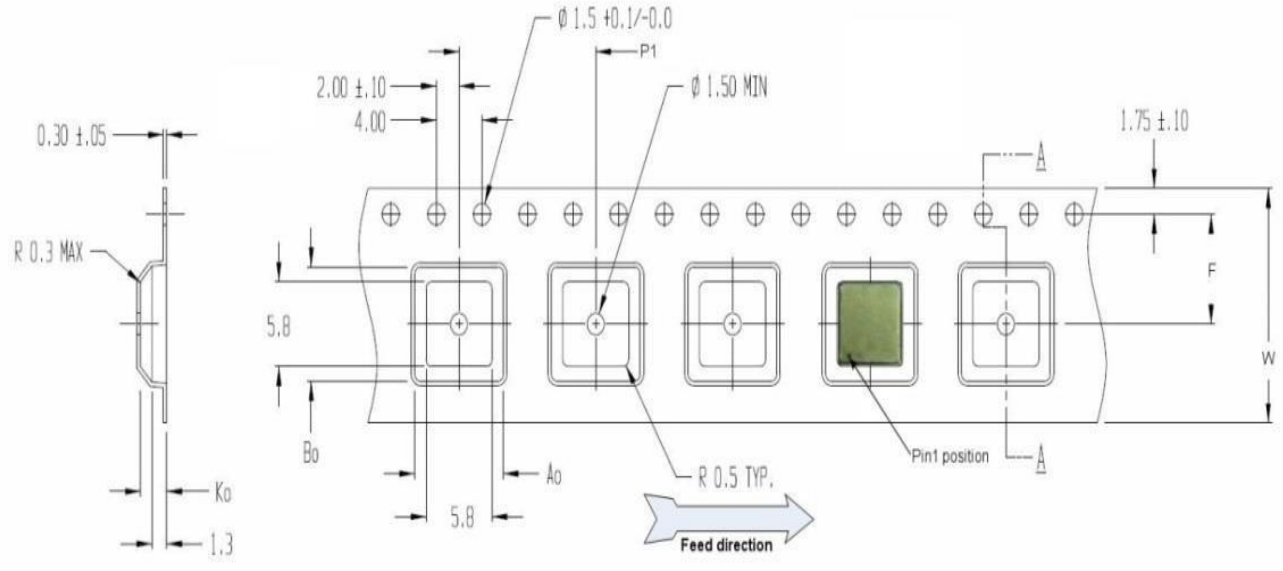

Figure 10. Carrier Tape

Table 11. Carrier Tape Dimensions

	MM	Inch
A_0	10.9 ± 0.1	0.429 ± 0.004
B_0	10.7± 0.1	0.421 ± 0.004
K_0	3 ± 0.1	0.240 ± 0.004
P1	12.0 ± 0.1	0.472 ± 0.004
W	16.0 ± 0.3	0.630 ± 0.012

16.3. Reel

Reel material—anti-static plastic.

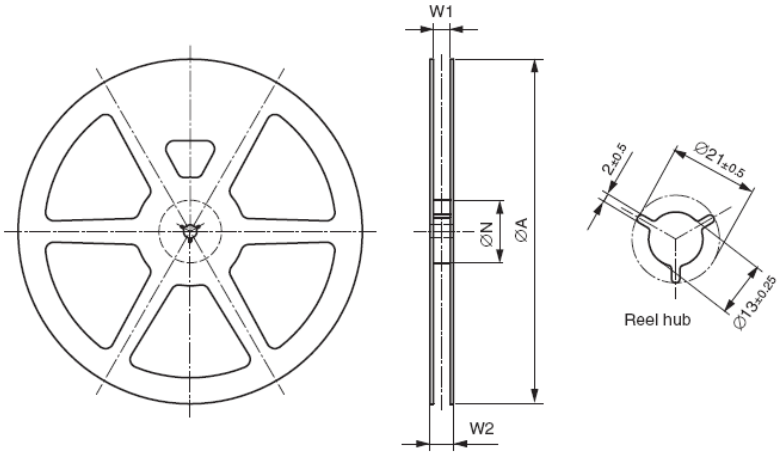

Figure 11. Reel

Table 12. Reel Dimensions

Suffix	TR1		TR2	
	MM	Inch	MM	Inch
ØA	180.0 ± 2.0	7.08 ± 0.08	330.0 ± 2.0	13.0 ± 0.08
ØN	60.0 ± 2.0	2.36 ± 0.08	102.0 ± 2.0	4.02 ± 0.08
W1	16.4 + 2.0 / -0	0.64 + 0.08/-0	8.4 ± 0.5	0.66 ± 0.02
W2	16.4 +3.0 / -0.5	0.64 +0.12/0.02	10.8 ± 0.2	0.42 ± 0.08

17. ORDERING INFORMATION

The ORG4600-MK01 module is ordered according to the following methodology.

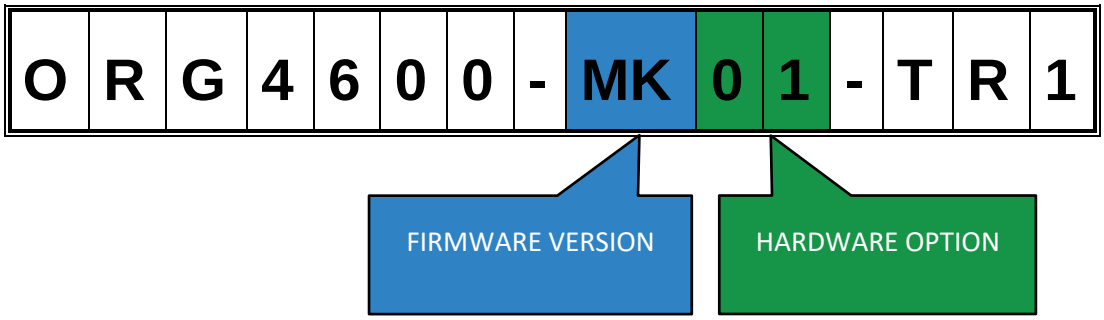

Figure 19. Ordering Options

Table 13. Orderable Devices

Part Number	FW Version	HW Option	VCC Range	Packaging	SPQ
ORG4600-MK01-TR1	MK	01	2-5.5V	Reeled tape	300
ORG4600-MK01-TR2	MK	01	2-5.5V	Reeled tape	1200
ORG4600-MK01-UAR	MK	01	5V USB	Evaluation kit	1
ORG4600-MK01-USB	MK	01	5V USB	GNSS ON A STICK	1

18. ORIGINGPS PROPRIETARY PROTOCOL COMMANDS

OriginGPS has special commands that enable the customer to implement the ORG4600-MK01 in the easiest and quickest way without any knowledge of GPS/GNSS.

For additional information:

contactus@origingps.com www.origingps.com