THIS DRAWING IS UNPUBLISHED. RELEASED FOR PUBLICATION -,- .
© COPYRIGHT - BY TYCO ELECTRONICS CORPORATION. ALL RIGHTS RESERVED.

LOC	DIST
G	14

REVISIONS

P	LTR	DESCRIPTION	DATE	DWN	APVD
	F1	REVISED PER ECR-09-009722	05MAY09	HMR	TM
	F2	REVISED PER ECO-09-020935	29AUG09	KK	AEG

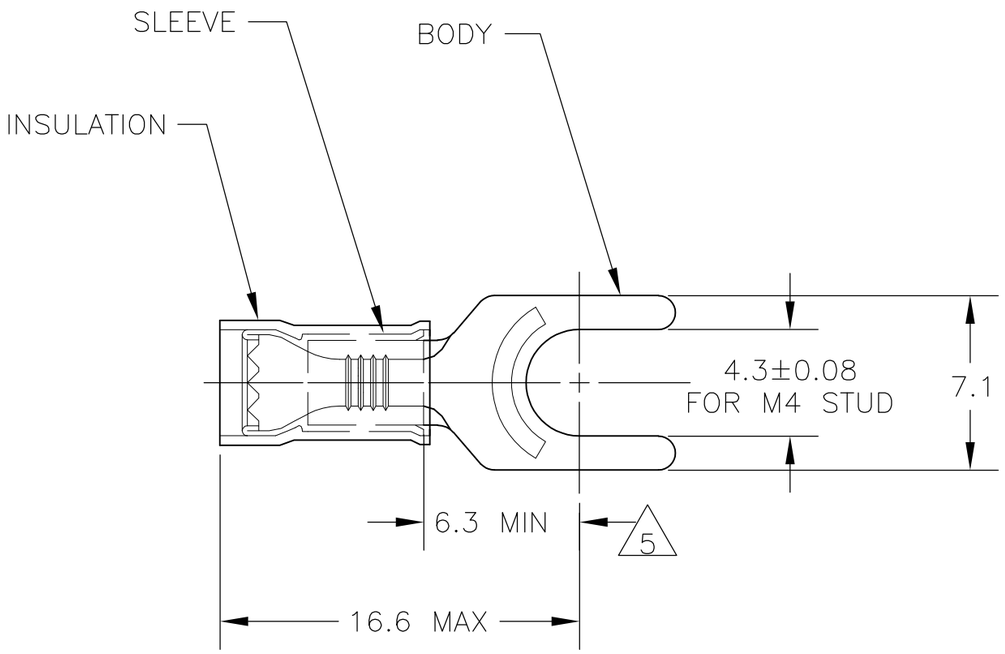

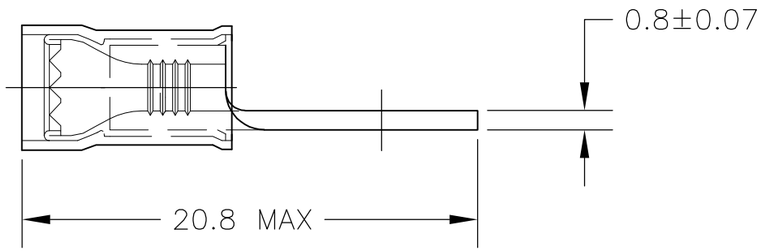

AMP
WIRE RANGE

22-16 AWG
SOLID OR STRANDED

1. STAMP "AMP 22-16*", APPROX AS SHOWN
2. WIRE INSULATION DIA: SEE TABLE
3. BODY & SLEEVE: TIN PLATE PER ASTM B545,
4. BODY & SLEEVE- CU PER ASTM B152 INSULATION - NYLON, COLOR - RED
5. APPLIES FROM EDGE OF METAL WIRE BARREL TO CENTER OF STUD HOLE.
6. UL LISTED E13288, 22-16 AWG, SOLID OR STRANDED.
7. OBSOLETE PARTS: OBSOLETE CIS STREAMLINING PER D.RENAUD/D.SINISI

APPROVALS	WIRE INSULATION DIA	PACKAGE TYPE	PART NO
7 OBSOLETE	6	2.0mm-3.2mm	ON TAPE, REEL	~~2-130516-1~~
7 OBSOLETE	6	2.0mm-3.2mm	LOOSE PIECE	~~130516-2~~
7 OBSOLETE	---	3.0mm-3.9mm	LOOSE PIECE	~~130516-1~~
	6	2.0mm-3.2mm	LOOSE PIECE	130516

AMP INCORPORATED
CUSTOMER SERVICE SYSTEMS

FOR ADDITIONAL PRODUCT INFORMATION OR COPIES OF DRAWINGS AND TECHNICAL DOCUMENTS	PRODUCT INFORMATION CENTER 1-800-522-6752
FOR APPLICATION TOOLING INFORMATION	TOOLING ASSISTANCE CENTER 1-800-722-1111
FOR ORDER ENTRY	1-800-526-5142

THIS DRAWING IS A CONTROLLED DOCUMENT FOR AMP INCORPORATED. IT IS SUBJECT TO CHANGE AND THE CONTROLLING ENGINEERING ORGANIZATION SHOULD BE CONTACTED FOR THE LATEST REVISION.

MAX RECOMMENDED OPERATING TEMPERATURE: 105°C MAX

VOLTAGE RATING: 300 V MAX

CIRCULAR MIL AREA: 0.26-1.65mm² [509-3,260] SOLID OR STRANDED

THIS DRAWING IS A CONTROLLED DOCUMENT.

DIMENSIONS: MM ~~INCHES~~

TOLERANCES UNLESS OTHERWISE SPECIFIED:

0 PLC	± -
1 PLC	± 0.2
2 PLC	± -
3 PLC	± -
4 PLC	± -
ANGLES	± -

MATERIAL - 4

FINISH - 3

DWN	JR RUTH	08NOV05
CHK	T MICHIELUTTI	08NOV05
APVD	T MICHIELUTTI	08NOV05
PRODUCT SPEC	—	
APPLICATION SPEC	—	
WEIGHT	—	

Tyco Electronics
Tyco Electronics Corporation
Harrisburg, PA 17105-3608

NAME: TERMINAL, SPADE TONGUE, P.I.D.G. WIRE SIZE: 22-16 AWG

SIZE	CAGE CODE	DRAWING NO	RESTRICTED TO
A3	00779	C-130516	—

CUSTOMER DRAWING | SCALE 4:1 | SHEET 1 OF 1 | REV F2

AMP 1470-19 REV 31MAR2000

sales@prom-elec.com / ООО ПРОМЭЛЕКТРОНИКА