Compact cylinders ADN/AEN, to ISO 21287

★/☆	Festo core product range Covers 80% of your automation tasks	★ Ready for dispatch from the Festo factory in 24 hours Held in stock in 13 service centres worldwide More than 2200 products
Worldwide:	Always in stock	☆ Ready for dispatch in 5 days maximum from stock
Superb:	Festo quality at an attractive price	Assembled for you in 4 service centres worldwide
Easy:	Reduces procurement and storing complexity	Up to 6 x 10^{12} variants per product series

Look for the star!

sales@prom-elec.com / ООО ПРОМЭЛЕКТРОНИКА

Compact cylinders ADN/AEN, to ISO 21287

Key features

At a glance

Sensor slots on three sides for flush mounting of proximity sensors

Piston rod with choice of male or female thread

Mounting option: Female thread and through-hole

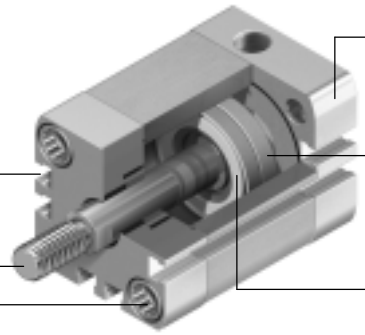

Centring hole in the end cap matches centring pins ZBS

Magnet for contactless position sensing

Integrated cushioning for absorbing residual energy

More than the standard

- The compact cylinder series ADN/AEN complies with the standard ISO 21287
- The ADN/AEN is distinguished by its compact design and broad area of application thanks to the large number of variants
- The variants can be configured according to individual needs thanks to the modular product system

Powerful

- Integrated cushioning for absorbing residual energy
- Long service life thanks to exceptional cushioning characteristics and minimal friction factors

Convenient

- Easy to mount with a comprehensive range of mounting accessories for just about every type of installation
- Highly flexible thanks to the wide range of variants
- Contactless position sensing using proximity sensors

Reliable

- Optimised manufacturing methods, patented technology and more than 40 years of experience in the field of cylinders make Festo and ADN/AEN a great team

Mounting options

With through screw

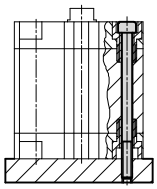

Direct mounting

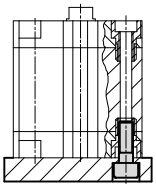

Size comparison between ISO 21287 and ISO 15552

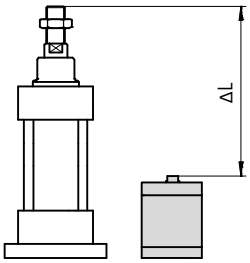

- Space savings of up to 50% compared with the standard ISO 15552

Cushioning types

Cushioning P

Mode of operation

- The drive is equipped with polymer flexible end-position cushioning

Application

- Small loads
- Low speeds
- Small cushioning capacity

Advantages

- No adjustment required
- Time-saving

Cushioning PPS

Mode of operation

- The drive is equipped with self-adjusting, pneumatic end-position cushioning

Application

- Larger loads
- Higher speeds
- Larger cushioning capacity

Advantages

- No adjustment required
- Up to four times greater cushioning capacity than ADN-...-P
- Time-saving
- Noise reduction

Cushioning capacity of ISO 21287 and ISO 15552

In terms of cushioning capacity, the compact cylinder ADN-...-PPS fills the gap between ADN-...-P and standard cylinders with ISO 15552.

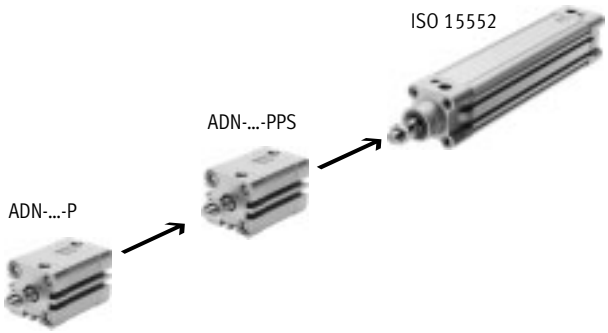

Compact cylinders ADN, to ISO 21287

Key features

Variants from the modular product system			
Symbol	Key features		Description
	S1	Reinforced piston rod	Increased lateral forces. Absorbs many times more lateral force than a basic cylinder
	S2	Through piston rod	For working at both ends with the same force in the forward and return stroke, for attaching external stops
	S6	Heat-resistant seals	Temperature resistance up to max. 120 °C
	S10	Constant motion (slow speed) at low piston speeds	Suitable for slow stroke movements at a constant, judder-free speed over the full stroke of the cylinder. Seal contains silicone grease (not free of paint-wetting impairment substances)
	S11	Low friction	The special seals considerably reduce system wear. This corresponds to a considerably lower response pressure. Seal contains silicone grease (not free of paint-wetting impairment substances)
	S20	Through, hollow piston rod	For supplying vacuum, small parts, media, etc.
	K2	Extended male piston rod thread	–
	K5	Special piston rod thread	Metric standard thread to ISO
	K8	Extended piston rod	–
	K10	Smooth anodised aluminium piston rod	Ideal for use in welding environments: – Protection against welding spatter – Small working loads – Harder surface compared to steel – Long service life
	KP	With clamping unit	Integrated clamping unit on the piston rod
	EL	With end-position locking	Positive locking in the end position as a drop guard. If there is a drop in pressure, the piston rod is secured in its end position to prevent it from dropping
	Q	Square piston rod	Protection against rotation. For correctly oriented feeding
	R3	High corrosion protection	All external cylinder surfaces comply with corrosion resistance class 3 to Festo standard 940 070. The piston rod is made from corrosion and acid resistant steel
	R8	Dust protection (wiper seal)	The cylinder is equipped with a hard-chrome plated piston rod and a rigid wiper seal, which protects against dry, dusty media
	TL	Captive rating plate	Laser etched rating plate. For easy identification of components when it comes to replacement, even after years in a harsh environment
	TT	Low temperature	Temperature resistance down to max. –40 °C

Software tools and configuration of Festo modular products
➔www.festo.com

Compact cylinders ADN, to ISO 21287

Product range overview

Function	Version	Type	Piston ∅	Stroke		Position sensing	Cushioning	
							Fixed	Self-adjusting
			[mm]	[mm]		A	P	PPS
Double-acting	**Basic version**							
		ADN	12	5, 10, 15, 20, 25, 30, 40	1 … 300	■	■	■ ∅ 20 … 100
			16	5, 10, 15, 20, 25, 30, 40, 50	1 … 300			
			20, 25	5, 10, 15, 20, 25, 30, 40, 50, 60	1 … 300			
			32, 40, 50	5, 10, 15, 20, 25, 30, 40, 50, 60, 80	1 … 400			
			63	10, 15, 20, 25, 30, 40, 50, 60, 80	1 … 400			
			80, 100	10, 15, 20, 25, 30, 40, 50, 60, 80	1 … 500			
			125	–	1 … 500			
	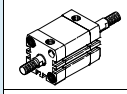	**ADN-…-S2** Through piston rod	12, 16, 20, 25	–	1 … 300	■	■	■ ∅ 20 … 100
			32, 40, 50, 63	–	1 … 400			
			80, 100, 125	–	1 … 500			
	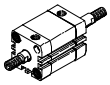	**ADN-…-S20** Through, hollow piston rod	16, 20, 25	–	1 … 300	■	■	■ ∅ 20 … 100
			32, 40, 50, 63	–	1 … 400			
			80, 100, 125	–	1 … 500			
	Reinforced piston rod							
		ADN-…-S1	25	–	5 … 300	■	■	–
			40, 63	–	10 … 400			
			100	–	10 … 500			
	Non-rotating with square piston rod							
		ADN-…-Q	12, 16, 20, 25	–	1 … 300	■	■	–
			32, 40, 50, 63	–	1 … 400			
			80, 100, 125	–	1 … 500			
	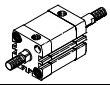	**ADN-…-Q-S2** Through piston rod	12, 16, 20, 25	–	1 … 300	■	■	–
			32, 40, 50, 63	–	1 … 400			
			80, 100, 125	–	1 … 500			
	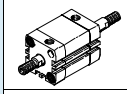	**ADN-…-Q-S20** Through, hollow piston rod	16, 20, 25	–	1 … 200	■	■	–
			32, 40, 50, 63	–	1 … 300			
			80, 100, 125	–	1 … 400			
	Standard hole pattern, with clamping unit							
		ADN-…-KP	20, 25	–	10 … 300	■	■	–
			32, 40, 50, 63	–	10 … 400			
			80, 100	–	10 … 500			
	Standard hole pattern, with end-position locking							
	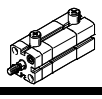	**ADN-…-EL**	20, 25	–	10 … 300	■	■	–
			32, 40, 50, 63	–	10 … 400			
			80, 100	–	10 … 500			

Compact cylinders ADN, to ISO 21287

Product range overview

Type	Male piston rod thread	Female piston rod thread	Extended male piston rod thread	Special piston rod thread	Extended piston rod	Smooth anodised piston rod	Heat-resistant seals max. 120 °C	Slow speed (constant motion)	Low friction	High corrosion protection	Dust protection	Low temperature	➔ Page/Internet
	A	I	K2	K5	K8	K10	S6	S10	S11	R3	R8	TT	
Basic version													
ADN	■	■	■	■	■	■ ∅ 20 and above	■	■	■	■	■ ∅ 20 and above	■ ∅ 20 … 100	13
ADN-…-S2 Through piston rod	■	■	■	■	■	–	■	–	–	–	–	■ ∅ 20 … 100	13
ADN-…-S20 Through, hollow piston rod	■	–	■	■	■	–	■	–	–	–	–	–	13
Reinforced piston rod													
ADN-…-S1	■	■	■	■	■	–	■	–	–	■	–	–	13
Non-rotating with square piston rod													
ADN-…-Q	■	■	■	■	■	–	■	–	–	–	–	–	13
ADN-…-Q-S2 Through piston rod	■	■	■	■	■	–	■	–	–	–	–	–	13
ADN-…-Q-S20 Through, hollow piston rod	■	–	■	■	■	–	■	–	–	–	–	–	13
Standard hole pattern, with clamping unit													
ADN-…-KP	■	■	■	■	■	–	–	–	–	–	–	–	40
Standard hole pattern, with end-position locking													
ADN-…-EL	■	■	■	■	■	–	–	–	–	–	–	–	49

Compact cylinders ADN, to ISO 21287

Product range overview

Function	Version	Type	Piston ∅	Stroke		Position sensing	Cushioning	
							Fixed	Self-adjusting
			[mm]	[mm]		A	P	PPS
Double-acting	Standard hole pattern, non-rotating with yoke							
		ADNGF	12	5, 10, 15, 20, 25, 30, 40	1 … 200	■	■	■ ∅ 20 … 100
			16	5, 10, 15, 20, 25, 30, 40, 50	1 … 200			
			20, 25	5, 10, 15, 20, 25, 30, 40, 50, 60	3 … 200			
			32, 40, 50	5, 10, 15, 20, 25, 30, 40, 50, 60, 80	5 … 300			
			63, 80	10, 15, 20, 25, 30, 40, 50, 60, 80	5 … 300			
			100	10, 15, 20, 25, 30, 40, 50, 60, 80	5 … 400			
	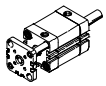	ADNGF-…-S2 Through piston rod	12, 16	–	1 … 200	■	■	■ ∅ 20 … 100
			20, 25		3 … 200			
			32, 40, 50, 63, 80, 100		5 … 250			
	Standard hole pattern, high-force cylinder							
	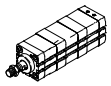	ADNH	25	–	1 … 150	■	■	–
			40					
			63					
			100					
	Standard hole pattern, multi-position cylinder							
	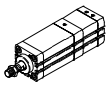	ADNM	25	–	1 … 2,000	■	■	–
			40					
			63					
			100					

Compact cylinders ADN, to ISO 21287

Product range overview

Type	Male piston rod thread	Female piston rod thread	Extended male piston rod thread	Special piston rod thread	Extended piston rod	Heat-resistant seals max. 120 °C	➔ Page/Internet
	A	I	K2	K5	K8	S6	
Standard hole pattern, non-rotating with yoke							
ADNGF	–	–	–	–	–	■	adngf
ADNGF-…-S2 Through piston rod	–	–	–	–	–	■	adngf
Standard hole pattern, high-force cylinder							
ADNH	■	■	■	■	■	■	adnh
Standard hole pattern, multi-position cylinder							
ADNM	■	■	■	■	■	■	adnh

Compact cylinders AEN, to ISO 21287

Product overview

Function	Version	Type	Piston ∅	Stroke	Position sensing	Cushioning
			[mm]	[mm]	A	P
Single-acting	**Basic version**					
		AEN	12	1 … 10	■	■
			16, 20, 25, 32, 40, 50, 63, 80, 100	1 … 25		
	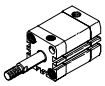	**AEN-…-Z** pulling	12	1 … 10	■	■
			16, 20, 25, 32, 40, 50, 63, 80, 100	1 … 25		
	Non-rotating with square piston rod					
		AEN-…-Q	16	1 … 25	■	■
			20, 25, 32, 40, 50, 63, 80, 100	1 … 25		

Compact cylinders AEN, to ISO 21287

Product overview

Type	Male piston rod thread	Female piston rod thread	Extended male piston rod thread	Special piston rod thread	Extended piston rod	Smooth anodised piston rod	Heat-resistant seals up to max. 120 °C	➔ Page/Internet
	A	I	K2	K5	K8	K10	S6	
Basic version								
AEN	■	■	■	■	■	■ ∅ 20 and above	■	59
AEN-...-Z pulling	■	■	■	■	■	■ ∅ 20 and above	■	59
Non-rotating with square piston rod								
AEN-...-Q	■	■	■	■	■	–	■	59

Compact cylinders ADN/AEN, to ISO 21287

Peripherals overview

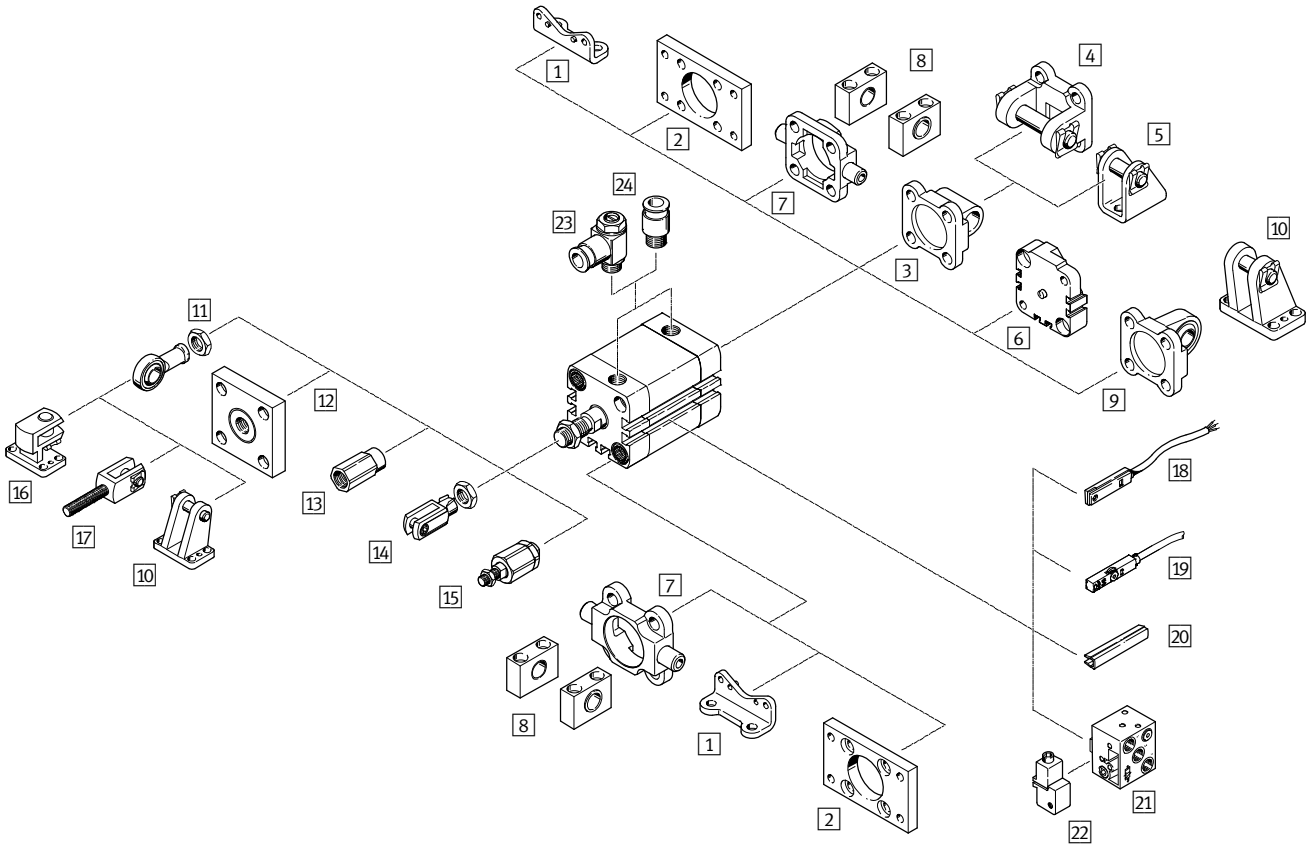

Mounting attachments and accessories			
		Description	➔ Page/Internet
1	Foot mounting HNA	For bearing or end caps	72
2	Flange mounting FNC	For bearing or end caps	73
3	Swivel flange SNCL/SNCL-...-R3	For end caps	74
4	Swivel flange SNCB/SNCB-...-R3	For swivel flange SNCL	79
5	Clevis foot LBN/CRLBN	For swivel flange SNCL	78
6	Multi-position kit DPNA	For connecting two cylinders with identical piston ∅ to form a multi-position cylinder	77
7	Trunnion flange ZNCF/CRZNG	For bearing caps	80
8	Trunnion support LNZG	For trunnion flange ZNCF/CRZNG	81
9	Swivel flange SNCS/CRSNCS/SNCS-...-R3	For end caps	75
10	Clevis foot LBG/LBG-...-R3	For swivel flange SNCS	76
11	Rod eye SGS/CRSGS	With spherical bearing	82
12	Coupling piece KSG/KSZ	For compensating radial deviations	82
13	Adapter AD	For mounting a vacuum suction cup on a hollow cylinder piston rod	82
14	Rod clevis SG/CRSG	Permits a swivelling movement of the cylinder in one plane	82
15	Self-aligning rod coupler FK/CRFK	For compensating radial and angular deviations	82
16	Right-angle clevis foot LQG	For rod eye SGS	83
17	Rod clevis SGA	With male thread	82
18	Proximity sensor SME/SMT-8	Can be integrated in the sensor slot of the cylinder profile barrel	85
19	Proximity sensor SME/SMT-8M	Can be integrated in the sensor slot of the cylinder profile barrel	85
20	Slot cover ABP-5-S	For protecting the sensor cable and keeping dirt out of the sensor slots	85
21	Proximity sensor SMPO-8E	Pneumatic output signal	85
22	Mounting kit SMB-8E	For proximity sensor SMPO-8E	85
23	One-way flow control valve GRLA/GRLZ	For speed regulation	83
24	Push-in fitting QS	For connecting compressed air tubing with standard external diameters	qs

Compact cylinders ADN, to ISO 21287

Type codes

ADN	–	50	–	50	–	A	–	P	–	A	–	S2

Type	
Double-acting	
ADN	Compact cylinder

Piston ∅ [mm]

Stroke [mm]

Piston rod thread	
A	Male thread
I	Female thread

Cushioning	
P	Flexible cushioning rings/pads at both ends
PPS	Pneumatic cushioning, self-adjusting at both ends

Position sensing	
A	Via proximity sensor

Variant	
Q	Square piston rod
S1	Reinforced piston rod
S2	Through piston rod
S20	Through, hollow piston rod
K2	Piston rod with extended male thread
K5	Piston rod with special thread
K8	Extended piston rod
K10	Smooth anodised piston rod
S6	Heat-resistant seals up to max. 120 °C
S10	Slow speed (constant motion)
S11	Low friction
R3	High corrosion protection
R8	Dust protection
TL	Captive rating plate
TT	Low temperature

Compact cylinders ADN, to ISO 21287

Technical data

FESTO

Function

P cushioning

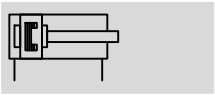

PPS cushioning

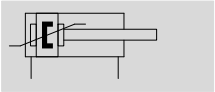

Variants ➔ page 3

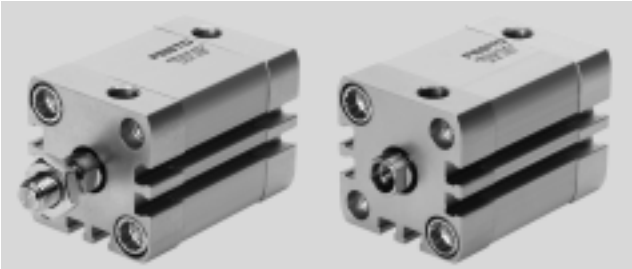

ADN- ... -A-P-A ADN- ... -I-P-A

ADN- ... -A-P-A-Q ADN- ... -A-P-A-S20

- Diameter
  12 ... 125 mm

- Stroke length
  1 ... 500 mm

- www.festo.com

General technical data											
Piston ∅	12	16	20	25	32	40	50	63	80	100	125
Design	Piston										
	Piston rod										
	Cylinder barrel										
Mode of operation	Double-acting										
Cushioning											
P	Flexible cushioning rings/pads at both ends										
PPS	–		Pneumatic cushioning, self-adjusting at both ends								–
Cushioning length											
PPS [mm]	–		3	3.5	4	5	6	7	7.5	10	–
Position sensing	Via proximity sensor										
Type of mounting	Via through-hole										
	Via female thread										
	Via accessories										
Mounting position	Any										

Technical data – Basic version and variants						
Piston ∅	12	16	20	25	32	40
Pneumatic connection						
–	M5	M5	M5	M5	G1/8	G1/8
S1	–	–	–	M5	–	M5
Female piston rod thread						
–	M3	M4	M6	M6	M8	M8
K5	–	–	M5	M5	M6	M6
S1	–	–	–	M6	–	M10
S1-K5	–	–	–	M5	–	M8
Male piston rod thread						
–	M5	M6	M8	M8	M10x1.25	M10x1.25
K5	M6	M8	M10, M10x1.25	M10, M10x1.25	M10, M12	M10, M12
S1	–	–	–	M8	–	M12x1.25
S1-K5	–	–	–	M10, M10x1.25	–	M10x1.25, M12
Q-K5	M6	M8	M10; M10x1.25	M10; M10x1.25	M10	M10
Max. torsional backlash of piston rod [°]						
Q	2	1.8	1.6	1.6	1.2	1.2

Technical data – Basic version and variants					
Piston ∅	50	63	80	100	125
Pneumatic connection					
–	G1/8	G1/8	G1/8	G1/8	G1/4
S1	–	G⅛	–	G⅛	–
Female piston rod thread					
–	M10	M10	M12	M12	M16
K5	M8	M8	M10	M10	–
S1	–	M12	–	M16	–
S1-K5	–	M10	–	–	–
Male piston rod thread					
–	M12x1.25	M12x1.25	M16x1.5	M16x1.5	M20x1.5
K5	M12, M16	M12, M16	M16, M20, M20x1.5	M16, M20, M20x1.5	M20
S1	–	M16x1.5	–	M20x1.5	–
S1-K5	–	M12x1.25, M16	–	M16x1.5, M20	–
Q-K5	M12	M12	M16	M16	M20
Max. torsional backlash of piston rod [°]					
Q	1	1	0.8	0.8	0.8

Operating and environmental conditions											
Piston ∅	12	16	20	25	32	40	50	63	80	100	125
Operating medium	Compressed air in accordance with ISO 8573-1:2010 [7:4:4]										
Note on operating/pilot medium	Operation with lubricated medium possible (in which case lubricated operation will always be required)										
Operating pressure [bar]											
–	1 … 10		0.6 … 10								
PPS	–		1.5 … 10			1 … 10					–
Q	1.3 … 10		1 … 10		0.8 … 10			0.6 … 10			
S1	–			1 … 10	–	1 … 10	–	1 … 10	–	1 … 10	–
S2, S20	1.5 … 10	1.3 … 10	1.2 … 10		1 … 10			0.8 … 10			
S6	1 … 10		0.6 … 10								
S11	0.45 … 10				0.25 … 10						
R8, TT	–		1.5 … 10			1 … 10					–
Ambient temperature[1] [°C]											
–	–20 … +80										
S6	0 … +120										
R3	–20 … +80										
TT	–		–40 … +80								–
Corrosion resistance class CRC[2]											
–	2										
R3	3										
ATEX	Specified types ➔ www.festo.com										

1) Note operating range of proximity sensors

2) Corrosion resistance class CRC 2 to Festo standard FN 940070
Moderate corrosion stress. Indoor applications in which condensation may occur. External visible parts with primarily decorative requirements for the surface and which are in direct contact with the ambient atmosphere typical for industrial applications.
Corrosion resistance class CRC 3 to Festo standard FN 940070
High corrosion stress. Outdoor exposure under moderate corrosive conditions. External visible parts with primarily functional requirements for the surface and which are in direct contact with a normal industrial environment.

Forces [N] and impact energy [J]											
Piston ∅	12	16	20	25	32	40	50	63	80	100	125
Theoretical force at 6 bar, advancing											
–	68	121	188	295	483	754	1178	1870	3016	4712	7363
S1	–	–	–	295	–	754	–	1870	–	4712	–
S2	51	90	141	247	415	686	1057	1750	2827	4524	7069
Theoretical force at 6 bar, retracting											
–	51	90	141	247	415	686	1057	1750	2827	4524	7069
S1	–	–	–	247	–	633	–	1681	–	4417	–
S2	51	90	141	247	415	686	1057	1750	2827	4524	7069
Max. impact energy in the end positions											
–	0.07	0.15	0.2	0.3	0.4	0.7	1	1.3	1.8	2.5	3.3
S1	–	–	–	0.3	–	0.7	–	1.3	–	2.5	–
S6	0.035	0.075	0.1	0.15	0.2	0.35	0.5	0.65	0.9	1.25	1.75
K10	–	–	0.16	0.24	0.32	0.56	0.8	1	1.4	2	2.6
S20	–	0.016	0.024	0.083	0.15	0.39	0.48	0.62	0.8	0.9	0.95

Note

This data represents the maximum values that can be achieved. The maximum permissible impact energy must be observed.

Permissible impact velocity:

$$v_{perm.} = \sqrt{\frac{2 \times E_{perm.}}{m_{dead} + m_{load}}}$$

Maximum permissible load:

$$m_{load} = \frac{2 \times E_{perm.}}{v^2} - m_{dead}$$

$v_{perm.}$ Permissible impact velocity
$E_{perm.}$ Max. impact energy
m_{dead} Moving load (drive)
m_{load} Moving effective load

Note

In combination with PPS cushioning, the maximum impact energy is still obtained.

Max. energy conversion capacity [J]								
Piston ∅	20	25	32	40	50	63	80	100
For PPS cushioning	0.65	0.8	1	1.7	2.8	4.8	8	12

Max. lateral force Fq as a function of the projection x

∅ 12 ... 63

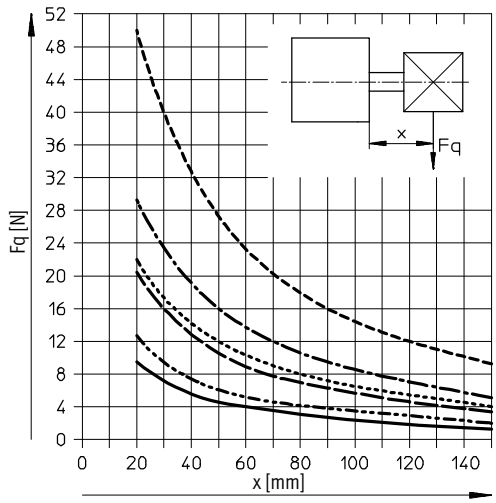

∅ 80 ... 125

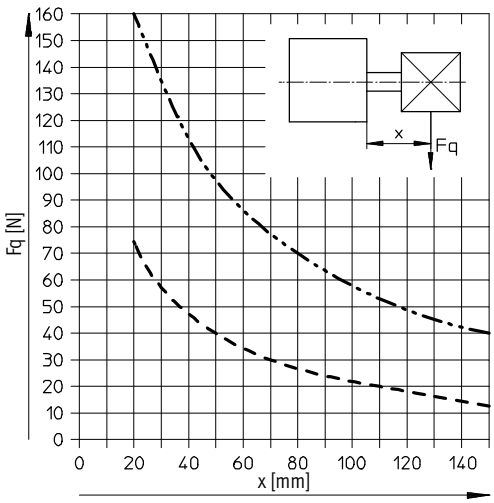

∅ 12
∅ 16
∅ 20
∅ 25
∅ 32/40
∅ 50/63
∅ 80/100
∅ 125

Max. lateral force Fq as a function of the projection x and the lever arm a

Q – Square piston rod

∅ 12

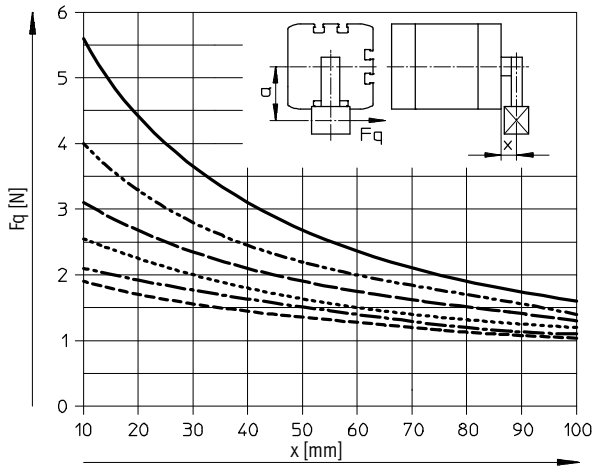

- a = 5 mm
- a = 10 mm
- a = 15 mm
- a = 20 mm
- a = 25 mm
- a = 30 mm

∅ 16

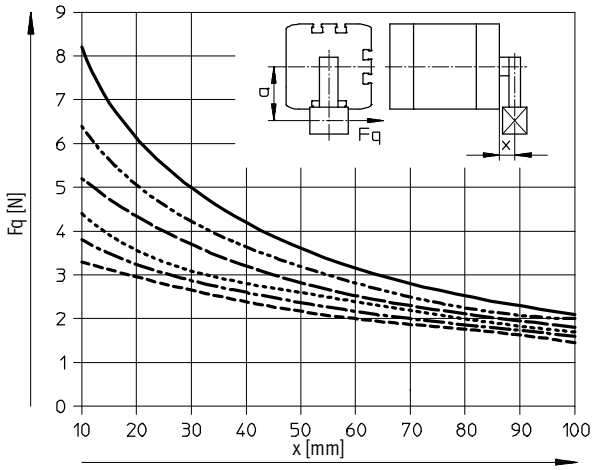

- a = 5 mm
- a = 10 mm
- a = 15 mm
- a = 20 mm
- a = 25 mm
- a = 30 mm

∅ 20/25

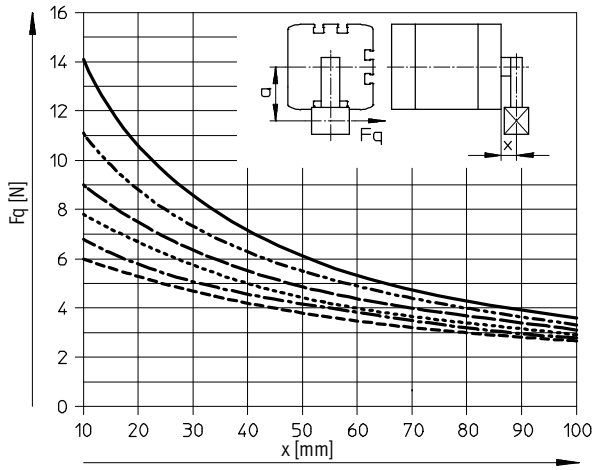

- a = 5 mm
- a = 10 mm
- a = 15 mm
- a = 20 mm
- a = 25 mm
- a = 30 mm

∅ 32/40

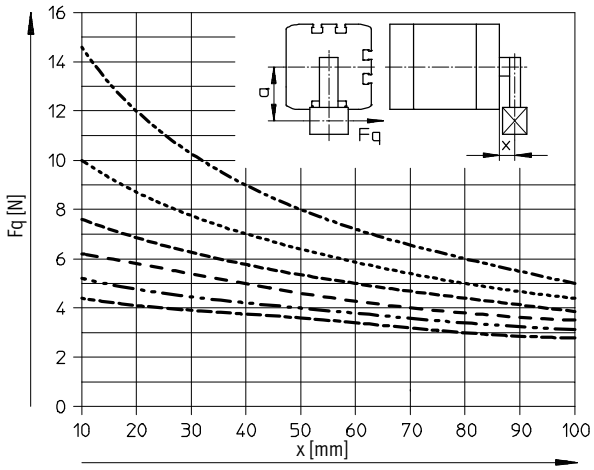

- a = 10 mm
- a = 20 mm
- a = 30 mm
- a = 40 mm
- a = 50 mm
- a = 60 mm

Note

- Torques on the piston rod are to be excluded with projections greater than those shown in the graphs.
- If a = 0, the corresponding lateral load line of the basic ADN version can be used (➔ page 15).

Max. lateral force Fq as a function of the projection x and the lever arm a

Q – Square piston rod

∅ 50/63

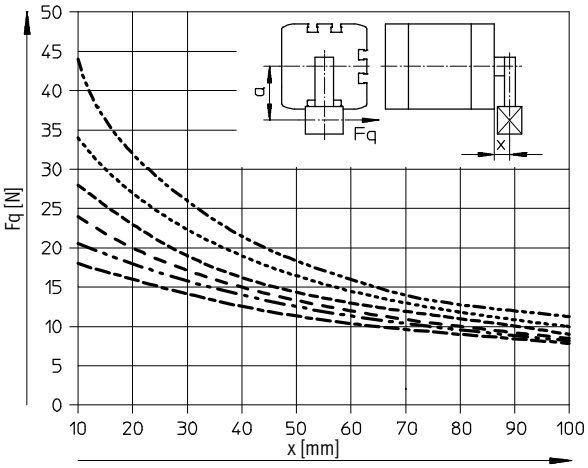

- a = 10 mm
- a = 20 mm
- a = 30 mm
- a = 40 mm
- a = 50 mm
- a = 60 mm

∅ 80/100

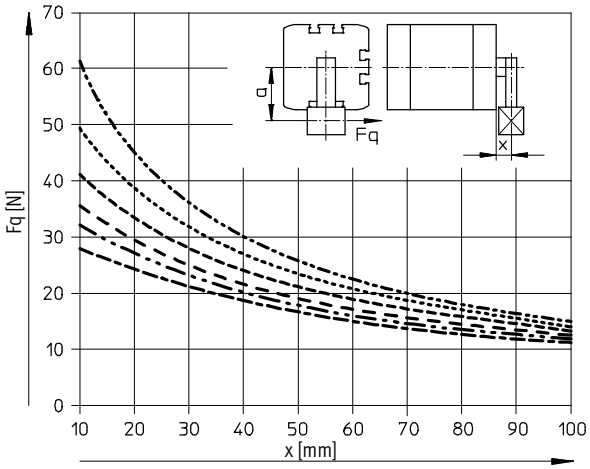

- a = 10 mm
- a = 20 mm
- a = 30 mm
- a = 40 mm
- a = 50 mm
- a = 60 mm

∅ 125

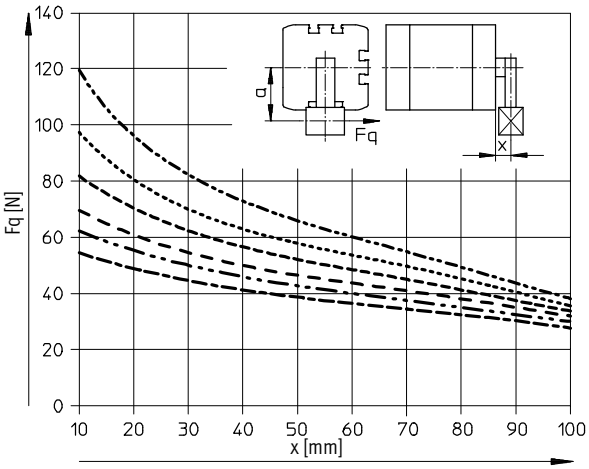

- a = 10 mm
- a = 20 mm
- a = 30 mm
- a = 40 mm
- a = 50 mm
- a = 60 mm

Note

- Torques on the piston rod are to be excluded with projections greater than those shown in the graphs.
- If a = 0, the corresponding lateral load line of the basic ADN version can be used (➔ page 15).

Max. lateral force Fq as a function of the projection x

S1 – Reinforced piston rod

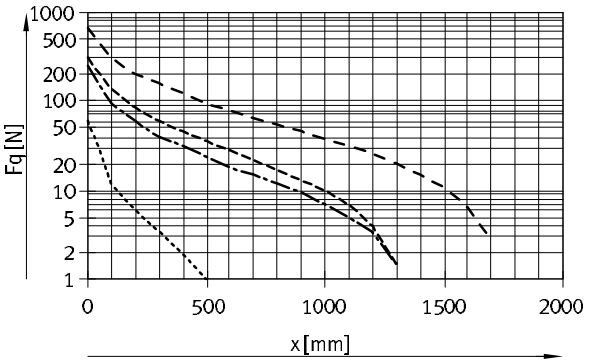

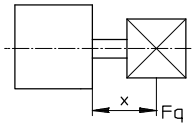

- ∅ 25
- ∅ 40
- ∅ 63
- ∅ 100

Weight [g]											
Piston ∅	12	16	20	25	32	40	50	63	80	100	125
Product weight with 0 mm stroke	77	79	131	156	265	346	540	722	1300	2154	2880
Additional weight per 10 mm stroke	12	14	21	23	30	37	51	59	79	98	117
Moving load with 0 mm stroke	9	15	30	50	60	80	140	180	400	570	1080
Additional load per 10 mm stroke	2	4	6	6	9	9	16	16	25	25	39

Materials

Sectional view

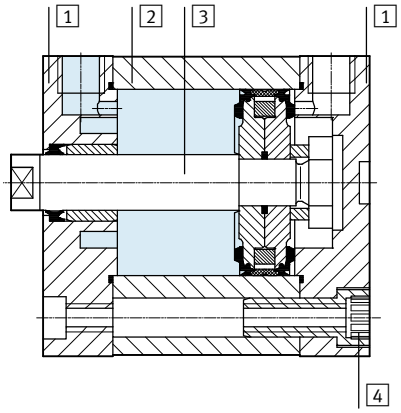

Compact cylinder		Basic version, Q	R8	S6, S10, S11	R3	K10
1	Bearing and end cap					
	∅ 12 … 80	Anodised aluminium				
	∅ 100/125	Coated die-cast aluminium				
2	Cylinder barrel	Anodised aluminium				
3	Piston rod	High-alloy steel	Hard-chromium plated tempered steel	High-alloy steel		Anodised aluminium
4	Flange screws					
	∅ 12 … 16	High-alloy steel			High-alloy steel	–
	∅ 20 … 63	Galvanised steel			Steel, zinc flake coating	Galvanised steel
	∅ 80 … 125	Standard screws, galvanised steel			Standard screws, high-alloy steel	Standard screws, galvanised steel
–	Seals	Polyurethane		Fluoro elastomer	Polyurethane	
	Note on materials	RoHS-compliant				

Dimensions – Basic version Download CAD data ➔ **www.festo.com**

∅ 12 … 63

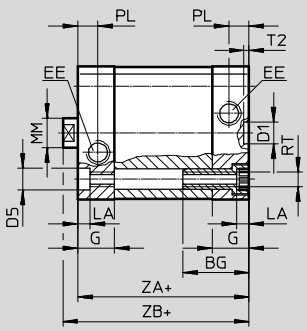

∅ 32 … 63

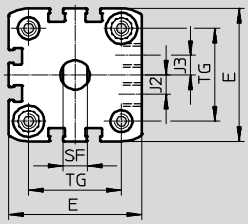

∅ 12 … 25

∅ 12

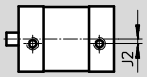

∅ 80 … 125

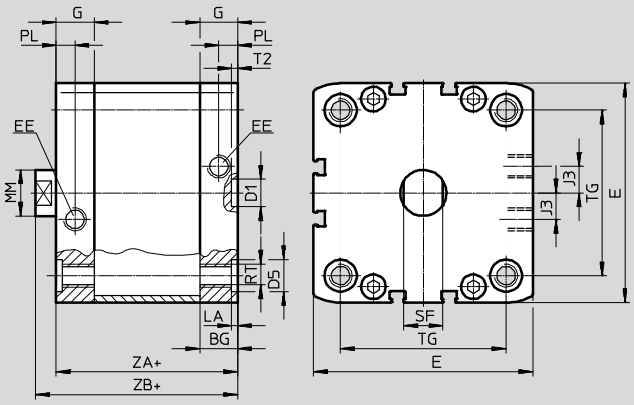

\+ = plus stroke length

∅ [mm]	BG min.	D1 ∅ H9	D5 ∅	E	EE	G	J2	J3	LA +0.2
12	17	9	6^{F9}	27.5 +0.3	M5	10.5	2	–	3.5
16				29 +0.3		11	2.6		
20	19.5		9^{F9}	35.5 +0.3		12			5
25				39.5 +0.3					
32	26			47 +0.3	G1/8	15	6		
40				54.5 +0.3			8		
50	27	12	12^{F9}	65.5 +0.3					
63				75.5 +0.3			11.5		
80	17		15	95.5 +0.6		16.5			2.6
100	21.5			113.5 +0.6		21.5	20		
125	20		–	134.6 +0.3	G1/4	20	21.15		–

∅ [mm]	MM ∅	PL +0.2	RT	SF h13	T2 +0.1	TG ±0.2	ZA ±0.3	ZB +1.2	ZB PPS +1.3
12	6	6	M4	5	2.1	16	35	39.2	–
16	8			7		18		39.7	
20	10		M5	9		22	37	42.5	42.5
25						26	39	44.5	45.3
32	12	8.2	M6	10		32.5	44	50	50.6
40						38	45	51.1	51.7
50	16		M8	13	2.6	46.5		52.7	53.2
63						56.5	49	56.5	57
80	20		M10	17		72	54	62.9	63.4
100		10.5				89	67	76	76.8
125	25		M12	21		110	81	92	–

Dimensions – Variants Download CAD data ➔ **www.festo.com**

Basic version

1 Hex nut DIN 439-B only with ∅ 32 … 125

\+ = plus stroke length

S2 – Through piston rod

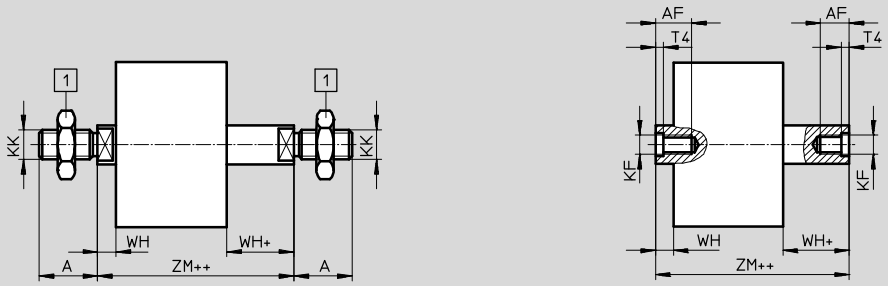

1 Hex nut DIN 439-B only with ∅ 32 … 125

\+ = plus stroke length

++ = plus 2x stroke length

S20 – Through, hollow piston rod

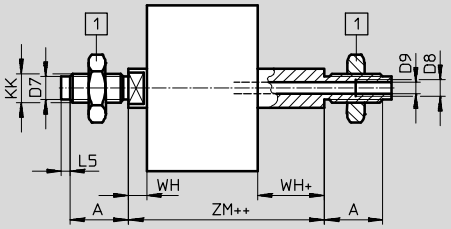

1 Hex nut DIN 439-B only with ∅ 32 … 125

\+ = plus stroke length

++ = plus 2x stroke length

K2 – Extended male piston rod thread

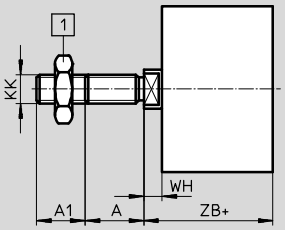

Note

In combination with variants S2/S20, the piston rod thread is extended at both ends.

1 Hex nut DIN 439-B only with ∅ 32 … 125

\+ = plus stroke length

K5 – Special piston rod thread

\+ = plus stroke length

Dimensions – Variants Download CAD data ➔ **www.festo.com**

K8 – Extended piston rod

- Note

In combination with variants S2/S20, the piston rod is extended at one end.

1 Hex nut DIN 439-B only with ∅ 32 … 125

\+ = plus stroke length

R8 – Dust protection / TT – Low temperature

1 Hex nut DIN 439-B only with ∅ 32 … 125

\+ = plus stroke length

∅ [mm]	A −0.5	A1	A2	AF min.	AF5 min.	B ∅	D7 ∅	D8	D9 ∅	L5	KF	KF5	KK
12	10	1 … 10	1 … 300	8	–	–	–	–	–	–	M3	–	M5
16	12			10			4.5		3.2	3	M4		M6
20	16	1 … 20		14	12	18	6		3.8	2	M6	M5	M8
25													
32	19		1 …400	16	14	27	8		4.5	3	M8	M6	M10x1.25
40													
50	22			20	16	31	10		6	3.5	M10	M8	M12x1.25
63													
80	28	1 … 30	1 … 500		20	35	–	G1/8	8	–	M12	M10	M16x1.5
100													
125	40	1 … 40		25	–	–		G1/4	11.7		M16	–	M20x1.5

∅ [mm]	KK5	T3	T4	VD	WH +1.3	WH PPS +1.4	WH R8/TT +1.3	ZB +1.2	ZB PPS +1.3	ZB R8/TT +1.2	ZM	ZM PPS
12	M6	–	1.5	–	4.2	–	–	39.2	–	–	44.5 +0.5	–
16	M8				4.7			39.7			45.7 +0.5	
20	M10x1.25	2	2.6	5.2	5.5	5.5	10.5	42.5	42.5	47.5	49.5 +0.5	49.5 +0.5
25	M10					5.5		44.5	45.3	49.5	51.5 +0.5	51.5 +0.5
32	M10	2.6	3.3	6.4	6	6.5	12.5	50	50.6	56.5	57.5 +0.5	58.6 +0.6
40	M12				6.1	6.6		51.1	51.7	57.5	58.6 +0.6	59.7 +0.7
50	M12	3.3	4.7		7.7	8.2	14.7	52.7	53.2	59.7	62.0 +0.6	63.1 +0.7
63	M16				7.5	8	14.6	56.5	57	63.6	65.4 +0.6	66.5 +0.7
80	M16	4.7	6.1		8.9	9.4	15.4	62.9	63.4	69.4	73.2 +0.6	74.3 +0.7
100	M20x1.5 M20				9	9.8	15.5	76	76.8	82.5	86.4 +0.6	88 +0.7
125	M20	–	7	–	11	–	–	92	–	–	104.4 +0.6	–

Dimensions – Variants Download CAD data ➔ **www.festo.com**

Q – Square piston rod

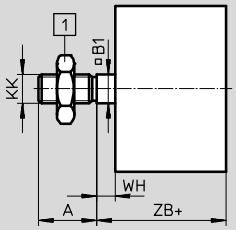

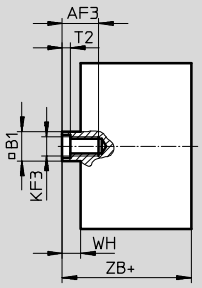

1 Hex nut DIN 439-B only with ∅ 32 … 125

\+ = plus stroke length

Q-S2 – Square, through piston rod

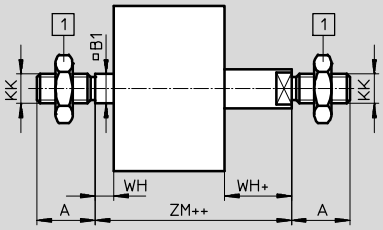

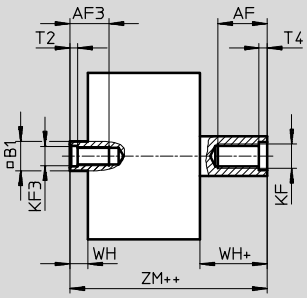

1 Hex nut DIN 439-B only with ∅ 32 … 125

\+ = plus stroke length

++ = plus 2x stroke length

Q-S20 – Square, through, hollow piston rod

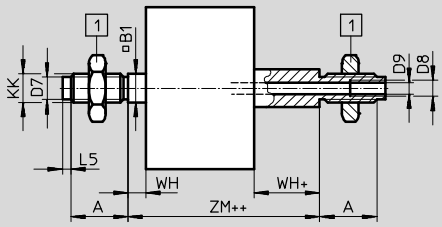

1 Hex nut DIN 439-B only with ∅ 32 … 125

\+ = plus stroke length

++ = plus 2x stroke length

Q-K2 – Square piston rod with extended male thread

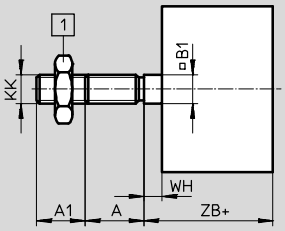

Note

In combination with variants S2/S20, the piston rod thread is extended at both ends.

1 Hex nut DIN 439-B only with ∅ 32 … 125

\+ = plus stroke length

Q-K5 – Square, special piston rod thread

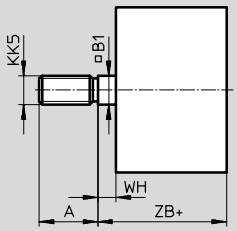

\+ = plus stroke length

Dimensions – Variants Download CAD data ➔ **www.festo.com**

Q-K8 – Square, extended piston rod

Note

In combination with variants S2/S20, the piston rod is extended at one end on the square piston rod.

1 Hex nut DIN 439-B only with ∅ 32 … 125

\+ = plus stroke length

∅ [mm]	A −0.5	A1	A2	AF min.	AF3 min.	B1 □	D7 ∅	D8	D9 ∅
12	10	1 … 10	1 … 300	8	8	5.5	–	–	–
16	12			10	10	7	4.5		3.2
20	16	1 … 20		14	12	9	6		3.8
25									
32	19		1 …400	16	14	10	8		4.5
40									
50	22			20	16	12	10		6
63									
80	28	1 … 30	1 … 500	20	20	16	–	G1/8	8
100									
125	40	1 … 40		25	24	20		G1/4	11.7

∅ [mm]	L5	KF	KF3	KK	KK5	T2	WH +1.3	ZB +1.2	ZM
12	–	M3	M3	M5	M6	1.5	4.2	39.2	44.5 +0.5
16	3	M4	M4	M6	M8		4.7	39.7	45.7 +0.5
20	2	M6	M5	M8	M10x1.25	2	5.5	42.5	49.5 +0.5
25					M10			44.5	51.5 +0.5
32	3	M8	M6	M10x1.25	M10	2.6	6	50	57.5 +0.5
40							6.1	51.1	58.6 +0.6
50	3.5	M10	M8	M12x1.25	M12	3.3	8.2	53.2	62.8 +0.6
63							8.1	57.1	66.6 +0.6
80	–	M12	M10	M16x1.5	M16	4.7	8.9	62.9	73.2 +0.6
100							9	76	86.4 +0.6
125		M16	M12	M20x1.5	M20	6.1	11	92	104.4 +0.6

Dimensions – Variants Download CAD data ➔ **www.festo.com**

S1 – Reinforced piston rod

∅ 25

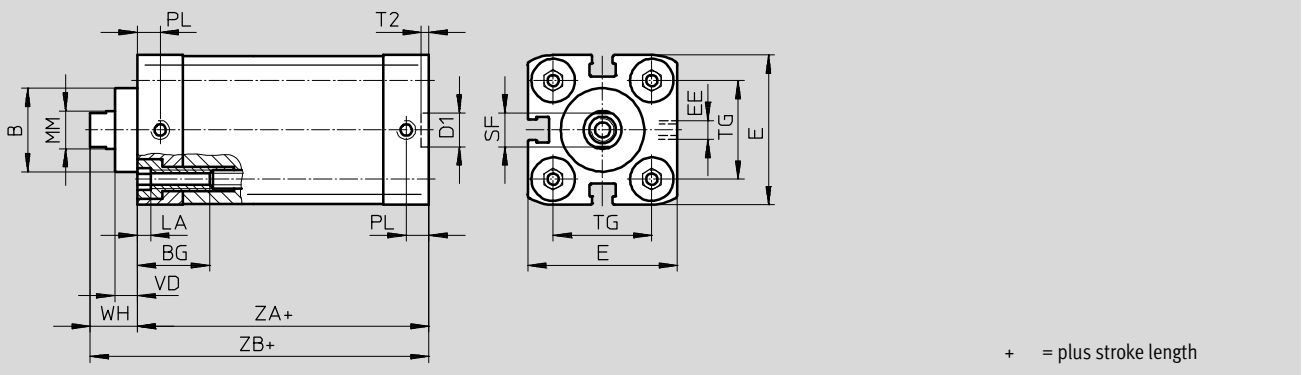

∅ 40 … 100

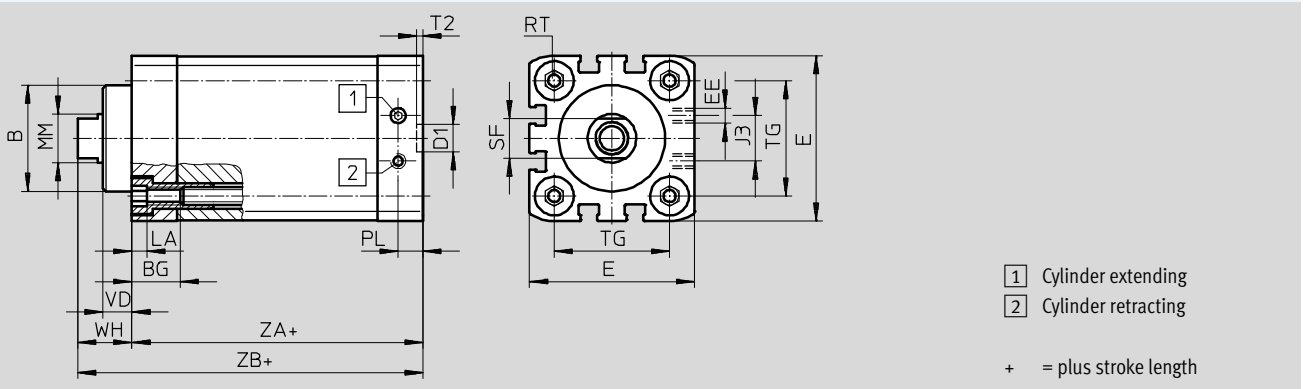

∅ [mm]	B ∅ f8	BG min.	D1 ∅ H9	E	EE	J3	LA	MM ∅	PL
25	22	15	9	39.5 +0.3	M5	–	5	10	6
40	35	16		54.5 +0.3		15		16	8.2
63	42		12	75.5 +0.3	G1/8	23		20	
100	55	17		113.5 +0.6		40		25	10.5

∅ [mm]	RT	SF h13	T2 +0.1	TG ±0.2	VD	WH +1.3	ZA ±0.3	ZB +1.2
25	M5	9	2.1	26	6	11.8	39	50.9
40	M6	13		38	9.5	18	45	62.9
63	M8	17	2.6	56.5	12	21	49	70.2
100	M10	21		89	15.5	26.5	67	93.5

Dimensions – Variants Download CAD data ➔ **www.festo.com**

S1 – Reinforced piston rod

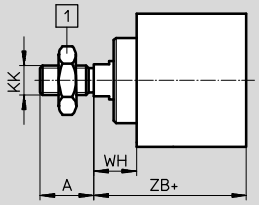

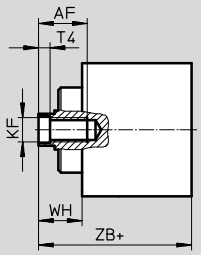

1 Hex nut DIN 439-B only with ∅ 40 … 100

\+ = plus stroke length

S1-K2 – Reinforced piston rod with extended male thread

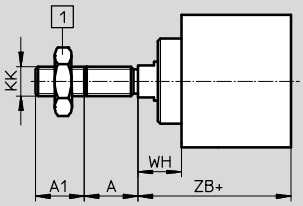

1 Hex nut DIN 439-B only with ∅ 40 … 100

\+ = plus stroke length

S1-K5 – Extended piston rod with special piston rod thread

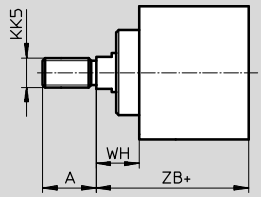

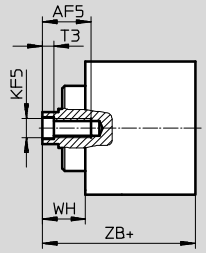

1 Hex nut DIN 439-B only with ∅ 40 … 100

\+ = plus stroke length

S1-K8 – Reinforced piston rod with extended piston rod

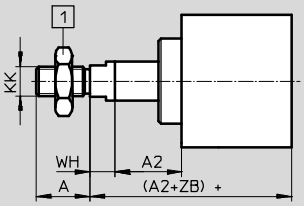

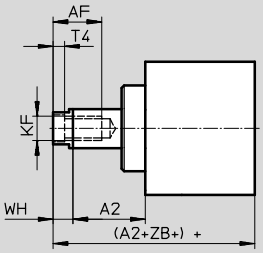

1 Hex nut DIN 439-B only with ∅ 40 … 100

\+ = plus stroke length

∅ [mm]	A −0.5	A1	A2	AF min.	AF5 min.	KF	KF5	KK	KK5	T3	T4	WH +1.3	ZB +1.2
25	16	1 … 20	1 … 300	14	12	M6	M5	M8	M10x1.25 M10	2	2.6	11.8	50.9
40	22		1 … 400	20	16	M10	M8	M12x1.25	M10x1.25 M12	3.3	4.7	18	62.9
63	28				20	M12	M10	M16x1.5	M12x1.25 M16	4.7	6.1	21	70.2
100	40	1 … 30	1 … 500	25	–	M16	–	M20x1.5	M16x1.5 M20	–	7	26.5	93.5

★ Core product range

Ordering data						
Type	Piston ∅	Stroke	I – Piston rod with female thread P – Flexible cushioning rings/pads at both ends		A – Male piston rod thread P – Flexible cushioning rings/pads at both ends	
	[mm]	[mm]	Part No.	Type	Part No.	Type
	12	5	★ 536211	ADN-12-5-I-P-A	★ 536204	ADN-12-5-A-P-A
		10	★ 536212	ADN-12-10-I-P-A	★ 536205	ADN-12-10-A-P-A
		15	★ 536213	ADN-12-15-I-P-A	★ 536206	ADN-12-15-A-P-A
		20	★ 536214	ADN-12-20-I-P-A	★ 536207	ADN-12-20-A-P-A
		25	★ 536215	ADN-12-25-I-P-A	★ 536208	ADN-12-25-A-P-A
		30	★ 536216	ADN-12-30-I-P-A	★ 536209	ADN-12-30-A-P-A
		40	★ 536217	ADN-12-40-I-P-A	★ 536210	ADN-12-40-A-P-A
	16	5	★ 536226	ADN-16-5-I-P-A	★ 536219	ADN-16-5-A-P-A
		10	★ 536227	ADN-16-10-I-P-A	★ 536220	ADN-16-10-A-P-A
		15	★ 536228	ADN-16-15-I-P-A	★ 536221	ADN-16-15-A-P-A
		20	★ 536229	ADN-16-20-I-P-A	★ 536222	ADN-16-20-A-P-A
		25	★ 536230	ADN-16-25-I-P-A	★ 536223	ADN-16-25-A-P-A
		30	★ 536231	ADN-16-30-I-P-A	★ 536224	ADN-16-30-A-P-A
		40	★ 536232	ADN-16-40-I-P-A	★ 536225	ADN-16-40-A-P-A
		50	★ 536341	ADN-16-50-I-P-A	★ 536331	ADN-16-50-A-P-A
	20	5	★ 536242	ADN-20-5-I-P-A	★ 536234	ADN-20-5-A-P-A
		10	★ 536243	ADN-20-10-I-P-A	★ 536235	ADN-20-10-A-P-A
		15	★ 536244	ADN-20-15-I-P-A	★ 536236	ADN-20-15-A-P-A
		20	★ 536245	ADN-20-20-I-P-A	★ 536237	ADN-20-20-A-P-A
		25	★ 536246	ADN-20-25-I-P-A	★ 536238	ADN-20-25-A-P-A
		30	★ 536247	ADN-20-30-I-P-A	★ 536239	ADN-20-30-A-P-A
		40	★ 536248	ADN-20-40-I-P-A	★ 536240	ADN-20-40-A-P-A
		50	★ 536249	ADN-20-50-I-P-A	★ 536241	ADN-20-50-A-P-A
		60	★ 536362	ADN-20-60-I-P-A	★ 536352	ADN-20-60-A-P-A
	25	5	★ 536259	ADN-25-5-I-P-A	★ 536251	ADN-25-5-A-P-A
		10	★ 536260	ADN-25-10-I-P-A	★ 536252	ADN-25-10-A-P-A
		15	★ 536261	ADN-25-15-I-P-A	★ 536253	ADN-25-15-A-P-A
		20	★ 536262	ADN-25-20-I-P-A	★ 536254	ADN-25-20-A-P-A
		25	★ 536263	ADN-25-25-I-P-A	★ 536255	ADN-25-25-A-P-A
		30	★ 536264	ADN-25-30-I-P-A	★ 536256	ADN-25-30-A-P-A
		40	★ 536265	ADN-25-40-I-P-A	★ 536257	ADN-25-40-A-P-A
		50	★ 536266	ADN-25-50-I-P-A	★ 536258	ADN-25-50-A-P-A
		60	★ 536383	ADN-25-60-I-P-A	★ 536373	ADN-25-60-A-P-A
	32	5	★ 536278	ADN-32-5-I-P-A	★ 536268	ADN-32-5-A-P-A
		10	★ 536279	ADN-32-10-I-P-A	★ 536269	ADN-32-10-A-P-A
		15	★ 536280	ADN-32-15-I-P-A	★ 536270	ADN-32-15-A-P-A
		20	★ 536281	ADN-32-20-I-P-A	★ 536271	ADN-32-20-A-P-A
		25	★ 536282	ADN-32-25-I-P-A	★ 536272	ADN-32-25-A-P-A
		30	★ 536283	ADN-32-30-I-P-A	★ 536273	ADN-32-30-A-P-A
		40	★ 536284	ADN-32-40-I-P-A	★ 536274	ADN-32-40-A-P-A
		50	★ 536285	ADN-32-50-I-P-A	★ 536275	ADN-32-50-A-P-A
		60	★ 536286	ADN-32-60-I-P-A	★ 536276	ADN-32-60-A-P-A
		80	★ 536287	ADN-32-80-I-P-A	★ 536277	ADN-32-80-A-P-A

Festo core product range	★ Ready for dispatch from the Festo factory in 24 hours ☆ Ready for dispatch in 5 days maximum from stock

★ Core product range

Ordering data						
Type	Piston ∅	Stroke	I – Piston rod with female thread P – Flexible cushioning rings/pads at both ends		A – Male piston rod thread P – Flexible cushioning rings/pads at both ends	
	[mm]	[mm]	Part No.	Type	Part No.	Type
	40	5	★ 536299	ADN-40-5-I-P-A	★ 536289	ADN-40-5-A-P-A
		10	★ 536300	ADN-40-10-I-P-A	★ 536290	ADN-40-10-A-P-A
		15	★ 536301	ADN-40-15-I-P-A	★ 536291	ADN-40-15-A-P-A
		20	★ 536302	ADN-40-20-I-P-A	★ 536292	ADN-40-20-A-P-A
		25	★ 536303	ADN-40-25-I-P-A	★ 536293	ADN-40-25-A-P-A
		30	★ 536304	ADN-40-30-I-P-A	★ 536294	ADN-40-30-A-P-A
		40	★ 536305	ADN-40-40-I-P-A	★ 536295	ADN-40-40-A-P-A
		50	★ 536306	ADN-40-50-I-P-A	★ 536296	ADN-40-50-A-P-A
		60	★ 536307	ADN-40-60-I-P-A	★ 536297	ADN-40-60-A-P-A
		80	★ 536308	ADN-40-80-I-P-A	★ 536298	ADN-40-80-A-P-A
	50	5	★ 536320	ADN-50-5-I-P-A	★ 536310	ADN-50-5-A-P-A
		10	★ 536321	ADN-50-10-I-P-A	★ 536311	ADN-50-10-A-P-A
		15	★ 536322	ADN-50-15-I-P-A	★ 536312	ADN-50-15-A-P-A
		20	★ 536323	ADN-50-20-I-P-A	★ 536313	ADN-50-20-A-P-A
		25	★ 536324	ADN-50-25-I-P-A	★ 536314	ADN-50-25-A-P-A
		30	★ 536325	ADN-50-30-I-P-A	★ 536315	ADN-50-30-A-P-A
		40	★ 536326	ADN-50-40-I-P-A	★ 536316	ADN-50-40-A-P-A
		50	★ 536327	ADN-50-50-I-P-A	★ 536317	ADN-50-50-A-P-A
		60	★ 536328	ADN-50-60-I-P-A	★ 536318	ADN-50-60-A-P-A
		80	★ 536329	ADN-50-80-I-P-A	★ 536319	ADN-50-80-A-P-A
	63	10	★ 536342	ADN-63-10-I-P-A	★ 536332	ADN-63-10-A-P-A
		15	★ 536343	ADN-63-15-I-P-A	★ 536333	ADN-63-15-A-P-A
		20	★ 536344	ADN-63-20-I-P-A	★ 536334	ADN-63-20-A-P-A
		25	★ 536345	ADN-63-25-I-P-A	★ 536335	ADN-63-25-A-P-A
		30	★ 536346	ADN-63-30-I-P-A	★ 536336	ADN-63-30-A-P-A
		40	★ 536347	ADN-63-40-I-P-A	★ 536337	ADN-63-40-A-P-A
		50	★ 536348	ADN-63-50-I-P-A	★ 536338	ADN-63-50-A-P-A
		60	★ 536349	ADN-63-60-I-P-A	★ 536339	ADN-63-60-A-P-A
		80	★ 536350	ADN-63-80-I-P-A	★ 536340	ADN-63-80-A-P-A
	80	10	★ 536363	ADN-80-10-I-P-A	★ 536353	ADN-80-10-A-P-A
		15	★ 536364	ADN-80-15-I-P-A	★ 536354	ADN-80-15-A-P-A
		20	★ 536365	ADN-80-20-I-P-A	★ 536355	ADN-80-20-A-P-A
		25	★ 536366	ADN-80-25-I-P-A	★ 536356	ADN-80-25-A-P-A
		30	★ 536367	ADN-80-30-I-P-A	★ 536357	ADN-80-30-A-P-A
		40	★ 536368	ADN-80-40-I-P-A	★ 536358	ADN-80-40-A-P-A
		50	★ 536369	ADN-80-50-I-P-A	★ 536359	ADN-80-50-A-P-A
		60	★ 536370	ADN-80-60-I-P-A	★ 536360	ADN-80-60-A-P-A
		80	★ 536371	ADN-80-80-I-P-A	★ 536361	ADN-80-80-A-P-A

Festo core product range	★ Ready for dispatch from the Festo factory in 24 hours ☆ Ready for dispatch in 5 days maximum from stock

★ Core product range

Ordering data						
Type	Piston ∅	Stroke	I – Piston rod with female thread PPS – Pneumatic cushioning, self-adjusting at both ends		A – Male piston rod thread PPS – Pneumatic cushioning, self-adjusting at both ends	
	[mm]	[mm]	Part No.	Type	Part No.	Type
	32	10	★ 572646	ADN-32-10-I-PPS-A	★ 572655	ADN-32-10-A-PPS-A
		15	★ 572647	ADN-32-15-I-PPS-A	★ 572656	ADN-32-15-A-PPS-A
		20	★ 572648	ADN-32-20-I-PPS-A	★ 572657	ADN-32-20-A-PPS-A
		25	★ 572649	ADN-32-25-I-PPS-A	★ 572658	ADN-32-25-A-PPS-A
		30	★ 572650	ADN-32-30-I-PPS-A	★ 572659	ADN-32-30-A-PPS-A
		40	★ 572651	ADN-32-40-I-PPS-A	★ 572660	ADN-32-40-A-PPS-A
		50	★ 572652	ADN-32-50-I-PPS-A	★ 572661	ADN-32-50-A-PPS-A
		60	★ 572653	ADN-32-60-I-PPS-A	★ 572662	ADN-32-60-A-PPS-A
		80	★ 572654	ADN-32-80-I-PPS-A	★ 572663	ADN-32-80-A-PPS-A
	40	10	★ 572664	ADN-40-10-I-PPS-A	★ 572673	ADN-40-10-A-PPS-A
		15	★ 572665	ADN-40-15-I-PPS-A	★ 572674	ADN-40-15-A-PPS-A
		20	★ 572666	ADN-40-20-I-PPS-A	★ 572675	ADN-40-20-A-PPS-A
		25	★ 572667	ADN-40-25-I-PPS-A	★ 572676	ADN-40-25-A-PPS-A
		30	★ 572668	ADN-40-30-I-PPS-A	★ 572677	ADN-40-30-A-PPS-A
		40	★ 572669	ADN-40-40-I-PPS-A	★ 572678	ADN-40-40-A-PPS-A
		50	★ 572670	ADN-40-50-I-PPS-A	★ 572679	ADN-40-50-A-PPS-A
		60	★ 572671	ADN-40-60-I-PPS-A	★ 572680	ADN-40-60-A-PPS-A
		80	★ 572672	ADN-40-80-I-PPS-A	★ 572681	ADN-40-80-A-PPS-A
	50	10	★ 572682	ADN-50-10-I-PPS-A	★ 572691	ADN-50-10-A-PPS-A
		15	★ 572683	ADN-50-15-I-PPS-A	★ 572692	ADN-50-15-A-PPS-A
		20	★ 572684	ADN-50-20-I-PPS-A	★ 572693	ADN-50-20-A-PPS-A
		25	★ 572685	ADN-50-25-I-PPS-A	★ 572694	ADN-50-25-A-PPS-A
		30	★ 572686	ADN-50-30-I-PPS-A	★ 572695	ADN-50-30-A-PPS-A
		40	★ 572687	ADN-50-40-I-PPS-A	★ 572696	ADN-50-40-A-PPS-A
		50	★ 572688	ADN-50-50-I-PPS-A	★ 572697	ADN-50-50-A-PPS-A
		60	★ 572689	ADN-50-60-I-PPS-A	★ 572698	ADN-50-60-A-PPS-A
		80	★ 572690	ADN-50-80-I-PPS-A	★ 572699	ADN-50-80-A-PPS-A
	63	10	★ 572700	ADN-63-10-I-PPS-A	★ 572709	ADN-63-10-A-PPS-A
		15	★ 572701	ADN-63-15-I-PPS-A	★ 572710	ADN-63-15-A-PPS-A
		20	★ 572702	ADN-63-20-I-PPS-A	★ 572711	ADN-63-20-A-PPS-A
		25	★ 572703	ADN-63-25-I-PPS-A	★ 572712	ADN-63-25-A-PPS-A
		30	★ 572704	ADN-63-30-I-PPS-A	★ 572713	ADN-63-30-A-PPS-A
		40	★ 572705	ADN-63-40-I-PPS-A	★ 572714	ADN-63-40-A-PPS-A
		50	★ 572706	ADN-63-50-I-PPS-A	★ 572715	ADN-63-50-A-PPS-A
		60	★ 572707	ADN-63-60-I-PPS-A	★ 572716	ADN-63-60-A-PPS-A
		80	★ 572708	ADN-63-80-I-PPS-A	★ 572717	ADN-63-80-A-PPS-A
	80	10	★ 572718	ADN-80-10-I-PPS-A	★ 572727	ADN-80-10-A-PPS-A
		15	★ 572719	ADN-80-15-I-PPS-A	★ 572728	ADN-80-15-A-PPS-A
		20	★ 572720	ADN-80-20-I-PPS-A	★ 572729	ADN-80-20-A-PPS-A
		25	★ 572721	ADN-80-25-I-PPS-A	★ 572730	ADN-80-25-A-PPS-A
		30	★ 572722	ADN-80-30-I-PPS-A	★ 572731	ADN-80-30-A-PPS-A
		40	★ 572723	ADN-80-40-I-PPS-A	★ 572732	ADN-80-40-A-PPS-A
		50	★ 572724	ADN-80-50-I-PPS-A	★ 572733	ADN-80-50-A-PPS-A
		60	★ 572725	ADN-80-60-I-PPS-A	★ 572734	ADN-80-60-A-PPS-A
		80	★ 572726	ADN-80-80-I-PPS-A	★ 572735	ADN-80-80-A-PPS-A

Festo core product range	★ Ready for dispatch from the Festo factory in 24 hours ☆ Ready for dispatch in 5 days maximum from stock

Ordering data						
Type	Piston ∅	Stroke	I – Piston rod with female thread P – Flexible cushioning rings/pads at both ends		A – Male piston rod thread P – Flexible cushioning rings/pads at both ends	
	[mm]	[mm]	Part No.	Type	Part No.	Type
	100	10	**536384**	**ADN-100-10-I-P-A**	**536374**	**ADN-100-10-A-P-A**
		15	**536385**	**ADN-100-15-I-P-A**	**536375**	**ADN-100-15-A-P-A**
		20	**536386**	**ADN-100-20-I-P-A**	**536376**	**ADN-100-20-A-P-A**
		25	**536387**	**ADN-100-25-I-P-A**	**536377**	**ADN-100-25-A-P-A**
		30	**536388**	**ADN-100-30-I-P-A**	**536378**	**ADN-100-30-A-P-A**
		40	**536389**	**ADN-100-40-I-P-A**	**536379**	**ADN-100-40-A-P-A**
		50	**536390**	**ADN-100-50-I-P-A**	**536380**	**ADN-100-50-A-P-A**
		60	**536391**	**ADN-100-60-I-P-A**	**536381**	**ADN-100-60-A-P-A**
		80	**536392**	**ADN-100-80-I-P-A**	**536382**	**ADN-100-80-A-P-A**

Ordering data						
Type	Piston ∅	Stroke	I – Piston rod with female thread PPS – Pneumatic cushioning, self-adjusting at both ends		A – Male piston rod thread PPS – Pneumatic cushioning, self-adjusting at both ends	
	[mm]	[mm]	Part No.	Type	Part No.	Type
	20	10	**577158**	**ADN-20-10-I-PPS-A**	**577166**	**ADN-20-10-A-PPS-A**
		15	**577159**	**ADN-20-15-I-PPS-A**	**577167**	**ADN-20-15-A-PPS-A**
		20	**577160**	**ADN-20-20-I-PPS-A**	**577168**	**ADN-20-20-A-PPS-A**
		25	**577161**	**ADN-20-25-I-PPS-A**	**577169**	**ADN-20-25-A-PPS-A**
		30	**577162**	**ADN-20-30-I-PPS-A**	**577170**	**ADN-20-30-A-PPS-A**
		40	**577163**	**ADN-20-40-I-PPS-A**	**577171**	**ADN-20-40-A-PPS-A**
		50	**577164**	**ADN-20-50-I-PPS-A**	**577172**	**ADN-20-50-A-PPS-A**
		60	**577165**	**ADN-20-60-I-PPS-A**	**577173**	**ADN-20-60-A-PPS-A**
	25	10	**577174**	**ADN-25-10-I-PPS-A**	**577182**	**ADN-25-10-A-PPS-A**
		15	**577175**	**ADN-25-15-I-PPS-A**	**577183**	**ADN-25-15-A-PPS-A**
		20	**577176**	**ADN-25-20-I-PPS-A**	**577184**	**ADN-25-20-A-PPS-A**
		25	**577177**	**ADN-25-25-I-PPS-A**	**577185**	**ADN-25-25-A-PPS-A**
		30	**577178**	**ADN-25-30-I-PPS-A**	**577186**	**ADN-25-30-A-PPS-A**
		40	**577179**	**ADN-25-40-I-PPS-A**	**577187**	**ADN-25-40-A-PPS-A**
		50	**577180**	**ADN-25-50-I-PPS-A**	**577188**	**ADN-25-50-A-PPS-A**
		60	**577181**	**ADN-25-60-I-PPS-A**	**577189**	**ADN-25-60-A-PPS-A**
	100	15	**577191**	**ADN-100-15-I-PPS-A**	**577200**	**ADN-100-15-A-PPS-A**
		20	**577192**	**ADN-100-20-I-PPS-A**	**577201**	**ADN-100-20-A-PPS-A**
		25	**577193**	**ADN-100-25-I-PPS-A**	**577202**	**ADN-100-25-A-PPS-A**
		30	**577194**	**ADN-100-30-I-PPS-A**	**577203**	**ADN-100-30-A-PPS-A**
		40	**577195**	**ADN-100-40-I-PPS-A**	**577204**	**ADN-100-40-A-PPS-A**
		50	**577196**	**ADN-100-50-I-PPS-A**	**577205**	**ADN-100-50-A-PPS-A**
		60	**577197**	**ADN-100-60-I-PPS-A**	**577206**	**ADN-100-60-A-PPS-A**
		80	**577198**	**ADN-100-80-I-PPS-A**	**577207**	**ADN-100-80-A-PPS-A**

Compact cylinders ADN, to ISO 21287

Ordering data – Modular products, basic version and variants

FESTO

Ordering table											
Size		12	16	20	25	32	40	Condi-tions	Code		Enter code
M	Module No.	**536203**	**536218**	**536233**	**536250**	**536267**	**536288**				
	Function	Compact cylinder, double-acting, based on ISO 21287							**ADN**		ADN
	Piston ∅ [mm]	12	16	20	25	32	40		☆ **-...**		
	Stroke [mm]	1 ... 300				1 ... 400			☆ **-...**		
	Piston rod thread	Male thread							☆ **-A**		
		Female thread						1	☆ **-I**		
	Cushioning	Flexible cushioning rings/pads at both ends							☆ **-P**		
		–		Pneumatic cushioning, self-adjusting at both ends				8	☆ **-PPS**		
↓	Position sensing	Via proximity sensor							☆ **-A**		-A

1 **I** Not with piston rod type S20.
Not with extended male thread K2

8 **PPS** Not with improved running performance K10, temperature resistance S6, low temperature TT, wiper seal R8
Minimum stroke 5 mm

M Mandatory data
O Options

Transfer order code

	ADN	–		–		–		–		–	**A**

Festo core product range

★ Ready for dispatch from the Festo factory in 24 hours
☆ Ready for dispatch in 5 days maximum from stock

Compact cylinders ADN, to ISO 21287

Ordering data – Modular products, basic version and variants

FESTO

Ordering table

	Size	12	16	20	25	32	40	Conditions	Code		Enter code
O	Piston rod type	Through piston rod						2	☆ -S2		
	[mm]	–	Through, hollow piston rod 1 … 300			1 … 400		2	-S20		
	Extended male thread [mm]	Piston rod with extended male thread 1 … 10		1 … 20					-…K2		
	Piston rod with special thread – Male thread	M6	M8	M10x1.25 M10	M10x1.25 M10	M10 M12	M10 M12		-"…"K5		
	Piston rod with special thread – Female thread	–	–	M5	M5	M6	M6				
	Extended piston rod [mm]	Extended piston rod 1 … 300				1 … 400		3	☆ -…K8		
	Improved running performance	–	–	Smooth anodised aluminium coated piston rod				4	-K10		
	Temperature resistance	Heat-resistant seals up to max. 120 °C							☆ -S6		
	Corrosion protection	High corrosion protection						5	☆ -R3		
	Captive rating plate	Laser etched rating plate							-TL		
	Low temperature [°C]	–	–	–40 … +80				6 7	-TT		
	Wiper seal	–	–	Dust protection				6	-R8		

2 **S2, S20** Not with improved running performance K10.
Not with corrosion protection R3.
Not with wiper seal R8

3 **K8** The sum of the stroke length and piston rod extension must not exceed the maximum permissible stroke length

4 **K10** Not with extended male thread K2.
Not with special piston rod thread K5.
Not with corrosion protection R3

5 **R3** Not with captive rating plate TL.
Not with wiper seal R8

6 **TT, R8** Not with improved running performance K10.
Not with temperature resistance S6

7 **TT** Not with wiper seal R8

Note

NSF-H1 lubricants are used in combination with R3 and in combination with R3 and K2, K5 or K8.

M Mandatory data
O Options

Transfer order code

– ☐ – ☐ – ☐ – ☐ – ☐ – ☐ – ☐ – ☐ – ☐ – ☐

Festo core product range

★ Ready for dispatch from the Festo factory in 24 hours
☆ Ready for dispatch in 5 days maximum from stock

Compact cylinders ADN, to ISO 21287

Ordering data – Modular products, basic version and variants

FESTO

Ordering table

	Size	50	63	80	100	125	Condi-tions	Code		Enter code
M	Module No.	**536309**	**536330**	**536351**	**536372**	**536393**				
	Function	Compact cylinder, double-acting, based on ISO 21287						**ADN**		ADN
	Piston ∅ [mm]	50	63	80	–	–		☆ -...		
		–	–	–	100	125		-...		
	Stroke [mm]	1 ... 400		1 ... 500				☆ -...		
	Piston rod thread	Male thread						☆ **-A**		
		Female thread					1	☆ **-I**		
	Cushioning	Flexible cushioning rings/pads at both ends						☆ **-P**		
		Pneumatic cushioning, self-adjusting at both ends				–	8	☆ **-PPS**		
↓	Position sensing	Via proximity sensor						☆ **-A**		-A

1 **I** Not with piston rod type S20.
Not with extended male thread K2

8 **PPS** Not with improved running performance K10, temperature resistance S6, low temperature TT, wiper seal R8
Minimum stroke 5 mm

M Mandatory data
O Options

Transfer order code

	ADN	–		–		–		–		–	**A**

Festo core product range
★ Ready for dispatch from the Festo factory in 24 hours
☆ Ready for dispatch in 5 days maximum from stock

Compact cylinders ADN, to ISO 21287

Ordering data – Modular products, basic version and variants

FESTO

Ordering table

	Size	50	63	80	100	125	Conditions	Code		Enter code
O	Piston rod type	Through piston rod					2	☆ -S2		
		Through, hollow piston rod					2	-S20		
	[mm]	1 … 400		1 … 500						
	Extended male thread	Piston rod with extended male thread								
	[mm]	1 … 20		1 … 30		1 … 40		-…K2		
	Piston rod with special thread – Male thread	M12 M16	M12 M16	M16 M20 M20x1.5	M16 M20 M20x1.5	M20		-"…"K5		
	Piston rod with special thread – Female thread	M8	M8	M10	M10	–				
	Extended piston rod	Extended piston rod								
	[mm]	1 … 400		1 … 500			3	☆ -…K8		
	Improved running performance	Smooth anodised aluminium coated piston rod Restricted stroke					4	-K10		
	[mm]	2 … 400	5 … 400	5 … 500						
	Temperature resistance	Heat-resistant seals up to max. 120 °C						☆ -S6		
	Corrosion protection	High corrosion protection					5	☆ -R3		
	Captive rating plate	Laser etched rating plate						-TL		
	Low temperature [°C]	–40 … +80				–	6 7	-TT		
	Wiper seal	Dust protection				–	6	-R8		

2 **S2, S20** Not with improved running performance K10.
Not with corrosion protection R3.
Not with wiper seal R8

3 **K8** The sum of the stroke length and piston rod extension must not exceed the maximum permissible stroke length

4 **K10** Not with extended male thread K2.
Not with special piston rod thread K5.
Not with corrosion protection R3

5 **R3** Not with captive rating plate TL.
Not with wiper seal R8

6 **TT, R8** Not with improved running performance K10.
Not with temperature resistance S6

7 **TT** Not with wiper seal R8

Note

NSF-H1 lubricants are used in combination with R3 and in combination with R3 and K2, K5 or K8.

M Mandatory data
O Options

Transfer order code

– ☐ – ☐ – ☐ – ☐ – ☐ – ☐ – ☐ – ☐ – ☐ – ☐

Festo core product range
★ Ready for dispatch from the Festo factory in 24 hours
☆ Ready for dispatch in 5 days maximum from stock

Compact cylinders ADN, to ISO 21287

Ordering data – Modular products, S10 – Version with constant motion, S11 – Version with low friction

Ordering table

	Size	12	16	20	25	32	40	Condi-tions	Code	Enter code
M	Module No.	**536203**	**536218**	**536233**	**536250**	**536267**	**536288**			
	Function	Compact cylinder, double-acting, based on ISO 21287							**ADN**	ADN
	Piston ∅ [mm]	12	16	20	25	32	40		**-...**	
	Stroke [mm]	1 ... 300				1 ... 400			**-...**	
	Piston rod thread	Male thread							**-A**	
		Female thread						1	**-I**	
	Cushioning	Flexible cushioning rings/pads at both ends							**-P**	-P
	Position sensing	Via proximity sensor							**-A**	-A
O	Male thread extended [mm]	Extended male piston rod thread 1 ... 10		1 ... 20					**-...K2**	
	Special piston rod thread – Male thread	M6	M8	M10x1.25 M10	M10x1.25 M10	M10 M12	M10 M12		**-"..."K5**	
	Special piston rod thread – Female thread	–	–	M5	M5	M6	M6			
	Piston rod extended [mm]	Extended piston rod 1 ... 300				1 ... 400		2	**-...K8**	
	Improved running performance	–	–	Smooth anodised aluminium coated piston rod				3	**-K10**	
	Constant motion [mm]	Slow speed (constant motion at low piston speeds) Restricted stroke 20 ... 300				20 ... 400		4	**-S10**	
	Low friction	Low friction						5	**-S11**	
	Corrosion protection	High corrosion protection						6	**-R3**	
	Captive rating plate	Laser etched rating plate							**-TL**	

1 **I** Not with extended male thread K2

2 **K8** The sum of the stroke length and piston rod extension must not exceed the maximum permissible stroke length

3 **K10** Not with extended male thread K2
Not with special piston rod thread K5
Not with corrosion protection R3

4 **S10** Not with low friction S11

5 **S11** Not with constant motion S10

6 **R3** Not with captive rating plate TL

Note

NSF-H1 lubricants are used in combination with R3 and in combination with R3 and K2, K5 or K8.

M Mandatory data
O Options

Transfer order code

	ADN	–		–		–		–	**P**	–	**A**	–		–		–		–		–	

Compact cylinders ADN, to ISO 21287

Ordering data – Modular products, S10 – Version with constant motion, S11 – Version with low friction

Ordering table

	Size	50	63	80	100	125	Conditions	Code	Enter code
M	Module No.	**536309**	**536330**	**536351**	**536372**	**536393**			
	Function	Compact cylinder, double-acting, based on ISO 21287						**ADN**	ADN
	Piston ∅ [mm]	50	63	80	100	125		**-...**	
	Stroke [mm]	1 ... 400		1 ... 500				**-...**	
	Piston rod thread	Male thread						**-A**	
		Female thread					1	**-I**	
	Cushioning	Flexible cushioning rings/pads at both ends						**-P**	-P
	Position sensing	Via proximity sensor						**-A**	-A
O	Male thread extended [mm]	Extended male piston rod thread 1 ... 20		1 ... 30		1 ... 40		**-...K2**	
	Special piston rod thread – Male thread	M12 M16	M12 M16	M16 M20 M20x1.5	M16 M20 M20x1.5	M20		**-"..."K5**	
	Special piston rod thread – Female thread	M8	M8	M10	M10	–			
	Piston rod extended [mm]	Extended piston rod 1 ... 400		1 ... 500			2	**-...K8**	
	Improved running performance [mm]	Smooth anodised aluminium coated piston rod Restricted stroke 2 ... 400	5 ... 400	5 ... 500			3	**-K10**	
	Constant motion [mm]	Slow speed (constant motion at low piston speeds) Restricted stroke 20 ... 400		20 ... 500			4	**-S10**	
	Low friction	Low friction					5	**-S11**	
	Corrosion protection	High corrosion protection					6	**-R3**	
	Captive rating plate	Laser etched rating plate						**-TL**	

1 **I** Not with extended male thread K2

2 **K8** The sum of the stroke length and piston rod extension must not exceed the maximum permissible stroke length

3 **K10** Not with extended male thread K2
Not with special piston rod thread K5
Not with corrosion protection R3

4 **S10** Not with low friction S11

5 **S11** Not with constant motion S10

6 **R3** Not with captive rating plate TL

- Note

NSF-H1 lubricants are used in combination with R3 and in combination with R3 and K2, K5 or K8.

M Mandatory data
O Options

Transfer order code

	ADN	–		–		–		–	P	–	A	–		–		–		–		–		–		–		–		–	

Compact cylinders ADN, to ISO 21287

Ordering data – Modular products, Q – Version with square piston rod, non-rotating

Ordering table

	Size	12	16	20	25	32	40	Condi-tions	Code		Enter code
M	Module No.	**536203**	**536218**	**536233**	**536250**	**536267**	**536288**				
	Function	Compact cylinder, double-acting, based on ISO 21287							**ADN**		ADN
	Piston ∅ [mm]	12	16	20	25	32	40		☆ **-...**		
	Stroke [mm]	1 ... 300				1 ... 400			☆ **-...**		
	Piston rod thread	Male thread							☆ **-A**		
		Female thread						1	☆ **-I**		
	Cushioning	Flexible cushioning rings/pads at both ends							☆ **-P**		-P
	Position sensing	Via proximity sensor							☆ **-A**		-A
O	Protection against torsion	Square piston rod							☆ **-Q**		-Q
	Type of piston rod	Through piston rod							☆ **-S2**		
		–	Through, hollow piston rod Restricted stroke 1 ... 200			1 ... 300			**-S20**		
	Male thread extended [mm]	Extended male piston rod thread 1 ... 10		1 ... 20					**-...K2**		
	Special piston rod thread Male thread	M6	M8	M10x1.25 M10	M10x1.25 M10	M10	M10		**-"..."K5**		
	Piston rod extended [mm]	Extended piston rod 1 ... 300				1 ... 400		2	☆ **-...K8**		
	Temperature resistance	Heat-resistant seals up to max. 120 °C							☆ **-S6**		
	Corrosion protection	High corrosion protection						3	☆ **-R3**		
	Captive rating plate	Laser etched rating plate							**-TL**		

1 **I** Not with piston rod type S20
Not with extended male thread K2

2 **K8** The sum of the stroke length and piston rod extension must not exceed the maximum permissible stroke length

3 **R3** Not with captive rating plate TL.

Note

NSF-H1 lubricants are used in combination with R3 and in combination with R3 and Q, K2, K5 or K8.

M Mandatory data
O Options

Transfer order code

	ADN	–		–		–		–	**P**	–	**A**	–	**Q**	–		–		–		–		–		–		–		–	

Festo core product range
★ Ready for dispatch from the Festo factory in 24 hours
☆ Ready for dispatch in 5 days maximum from stock

Compact cylinders ADN, to ISO 21287

Ordering data – Modular products, Q – Version with square piston rod, non-rotating

Ordering table

	Size	50	63	80	100	125	Conditions	Code		Enter code
M	Module No.	**536309**	**536330**	**536351**	**536372**	**536393**				
	Function	Compact cylinder, double-acting, based on ISO 21287						**ADN**		ADN
	Piston ∅ [mm]	50	63	80	100	125		☆ **-...**		
	Stroke [mm]	1 ... 400		1 ... 500				☆ **-...**		
	Piston rod thread	Male thread						☆ **-A**		
		Female thread					1	☆ **-I**		
	Cushioning	Flexible cushioning rings/pads at both ends						☆ **-P**		-P
	Position sensing	Via proximity sensor						☆ **-A**		-A
O	Protection against torsion	Square piston rod						☆ **-Q**		-Q
	Type of piston rod	Through piston rod						☆ **-S2**		
		Through, hollow piston rod Restricted stroke [mm]	1 ... 300	1 ... 400				**-S20**		
	Male thread extended [mm]	Extended male piston rod thread 1 ... 20		1 ... 30		1 ... 40		**-...K2**		
	Special piston rod thread Male thread	M12	M12	M16	M16	M20		**-"..."K5**		
	Piston rod extended [mm]	Extended piston rod 1 ... 400		1 ... 500			2	☆ **-...K8**		
	Temperature resistance	Heat-resistant seals up to max. 120 °C						☆ **-S6**		
	Corrosion protection	High corrosion protection					3	☆ **-R3**		
	Captive rating plate	Laser etched rating plate						**-TL**		

1 **I** Not with piston rod type S20
Not with extended male thread K2

2 **K8** The sum of the stroke length and piston rod extension must not exceed the maximum permissible stroke length

3 **R3** Not with captive rating plate TL.

- Note

NSF-H1 lubricants are used in combination with R3 and in combination with R3 and Q, K2, K5 or K8.

M Mandatory data
O Options

Transfer order code

	ADN	–		–		–		–	P	–	A	–	Q	–		–		–		–		–		–		–	

Festo core product range
★ Ready for dispatch from the Festo factory in 24 hours
☆ Ready for dispatch in 5 days maximum from stock

Compact cylinders ADN, to ISO 21287

Ordering data – Modular products, S1 – Version with reinforced piston rod

FESTO

Ordering table

	Size		25	40	63	100	Condi-tions	Code		Enter code
M	Module No.		**536250**	**536288**	**536330**	**536372**				
	Function		Compact cylinder, double-acting, based on ISO 21287					**ADN**		ADN
	Piston ∅	[mm]	25	40	63	100		**-...**		
	Stroke	[mm]	5 ... 300	10 ... 400		10 ... 500		**-...**		
	Piston rod thread		Male thread					**-A**		
			Female thread				1	**-I**		
	Cushioning		Flexible cushioning rings/pads at both ends					**-P**		-P
	Position sensing		Via proximity sensor					**-A**		-A
O	Male thread extended		Extended male piston rod thread							
		[mm]	1 ... 20			1 ... 30		**-...K2**		
	Special piston rod thread	Male thread	M10x1.25 M10	M10x1.25 M12	M12x1.25 M16	M16x1.5 M20		**-"..."K5**		
		Female thread	M5	M8	M10	–				
	Piston rod extended		Extended piston rod							
		[mm]	1 ... 300	1 ... 400		1 ... 500	2	**-...K8**		
	Temperature resistance		Heat-resistant seals up to max. 120 °C					**-S6**		
	Reinforced piston rod		Reinforced piston rod or extended piston rod bearing					**-S1**		-S1
	Captive rating plate		Laser etched rating plate					**-TL**		

1 **I** Not with extended male thread K2

2 **K8** The sum of the stroke length and piston rod extension must not exceed the maximum permissible stroke length

M Mandatory data
O Options

Transfer order code

	ADN	–		–		–		–	P	–	A	–		–		–		–		–	S1	–	

Compact cylinders ADN-KP, standard port pattern, with clamping unit

Type codes

ADN	–	20	–	50	–	KP	–	A	–	P	–	A	–	K2

Type	
Double-acting	
ADN	Compact cylinder

Piston ∅ [mm]

Stroke [mm]

Clamping unit	
KP	Integrated

Piston rod thread	
A	Male thread
I	Female thread

Cushioning	
P	Flexible cushioning rings/pads at both ends

Position sensing	
A	Via proximity sensor

Variant	
K2	Extended male piston rod thread
K5	Special piston rod thread
K8	Extended piston rod
TL	Captive rating plate

Compact cylinders ADN-KP, standard port pattern, with clamping unit

Technical data

Function

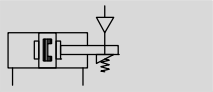

Diameter
20 … 100 mm

Stroke length
10 … 500 mm

Variants

K2

K5

K8

Note

Additional measures are required for use in safety-related control systems; in Europe, for example, the standards listed under the EC Machinery Directive must be observed. Without additional measures in accordance with statutory minimum requirements, the product is not suitable for use in safety-related sections of control systems.

General technical data								
Piston ∅	20	25	32	40	50	63	80	100
Pneumatic connection								
Cylinder	M5	M5	G⅛	G1/8	G1/8	G1/8	G1/8	G1/8
KP	M5	M5	M5	G1/8	G1/8	G1/8	G1/8	G1/8
Female piston rod thread								
–	M6		M8		M10		M12	
K5	M5		M6		M8		M10	
Male piston rod thread								
–	M8		M10x1.25		M12x1.25		M16x1.5	
K5	M10, M10x1.25		M10, M12		M12, M16		M16, M20, M20x1.5	
Axial play under load [mm]	0.5				0.8			
Constructional design	Piston							
	Piston rod							
	Cylinder barrel							
Cushioning	Flexible cushioning rings/pads at both ends							
Position sensing	Via proximity sensor							
Type of mounting	Via through-holes							
	Via female threads							
	Via accessories							
Mounting position	Any							
Clamping type with effective direction of action	From both sides							

Operating and environmental conditions	
Operating medium	Compressed air in accordance with ISO 8573-1:2010 [7:4:4]
Note on operating/pilot medium	Operation with lubricated medium possible (in which case lubricated operation will always be required)
Operating pressure [bar]	1.5 … 10
Min. release pressure [bar]	3
Ambient temperature[1] [°C]	–10 … +80
Corrosion resistance class CRC[2]	2

1) Note operating range of proximity sensors
2) Corrosion resistance class CRC 2 to Festo standard FN 940070
Moderate corrosion stress. Indoor applications in which condensation may occur. External visible parts with primarily decorative requirements for the surface and which are in direct contact with the ambient atmosphere typical for industrial applications.

Impact energy [J]								
Piston ∅	20	25	32	40	50	63	80	100
Max. impact energy at the end positions	0.2	0.3	0.4	0.7	1	1.3	1.8	2.5

Permissible impact velocity:

$$v_{perm.} = \sqrt{\frac{2 \times E_{perm.}}{m_{dead} + m_{load}}}$$

Maximum permissible load:

$$m_{load} = \frac{2 \times E_{perm.}}{v^2} - m_{dead}$$

$v_{perm.}$ Permissible impact velocity
$E_{perm.}$ Max. impact energy
m_{dead} Moving load (drive)
m_{load} Moving work load

- Note

These specifications represent the maximum values which can be reached. Note the maximum permitted impact energy.

Forces [N]								
Piston ∅	20	25	32	40	50	63	80	100
Theoretical force at 6 bar, advancing	188	295	483	754	1178	1870	3016	4712
Theoretical force at 6 bar, retracting	141	247	415	633	990	1682	2721	4418
Static holding force	350	350	600	1000	1400	2000	5000	5000

- Note

The specified holding force refers to a static load. If this value is exceeded, slippage may occur. Dynamic forces occurring during operation must not exceed the static holding force. The clamping unit is not backlash-free in the clamped condition if varying loads are applied to the piston rod.

Activation:
The clamping unit may only be released if the forces at the piston have reached equilibrium. Otherwise, there is a risk of accidents due to sudden movement of the piston rod. Blocking off the air supply at both ends (e.g. with a 5/3-way valve) does not provide any safety.

Max. lateral force Fq as a function of the projection x

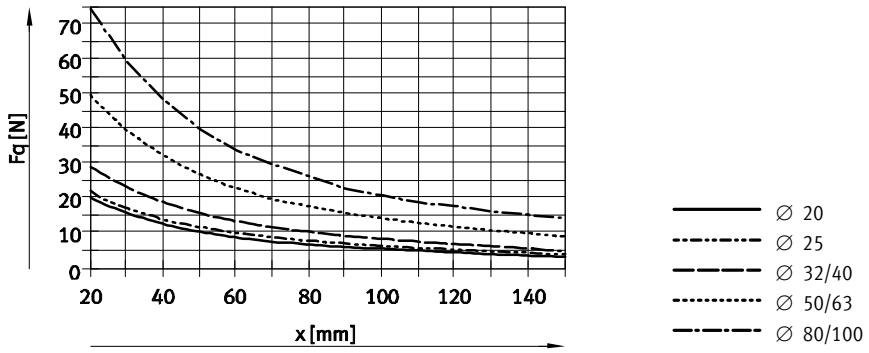

Weight [g]								
Piston ∅	20	25	32	40	50	63	80	100
Product weight with 0 mm stroke	282	344	503	789	1268	1894	3973	5497
Additional weight per 10 mm stroke	22	26	29	45	60	68	93	112
Moving load with 0 mm stroke	53	63	100	173	296	368	755	932
Additional load per 10 mm stroke	6	6	9	16	25	25	39	39

Materials

Sectional view

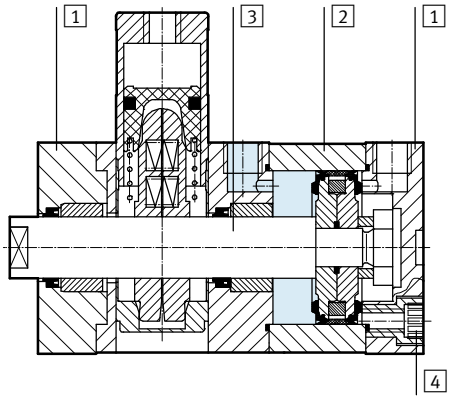

Compact cylinder			
1	Cover		Anodised aluminium
2	Cylinder barrel		Anodised aluminium
3	Piston rod		High-alloy steel
4	Flange screws	∅ 20 ... 63	Galvanised steel
		∅ 80 ... 100	Standard screws, galvanised steel
–	Seals		Polyurethane, nitrile rubber
	Note on materials		RoHS compliant

Dimensions – Basic version Download CAD data ➔ **www.festo.com**

∅ 20 ... 63

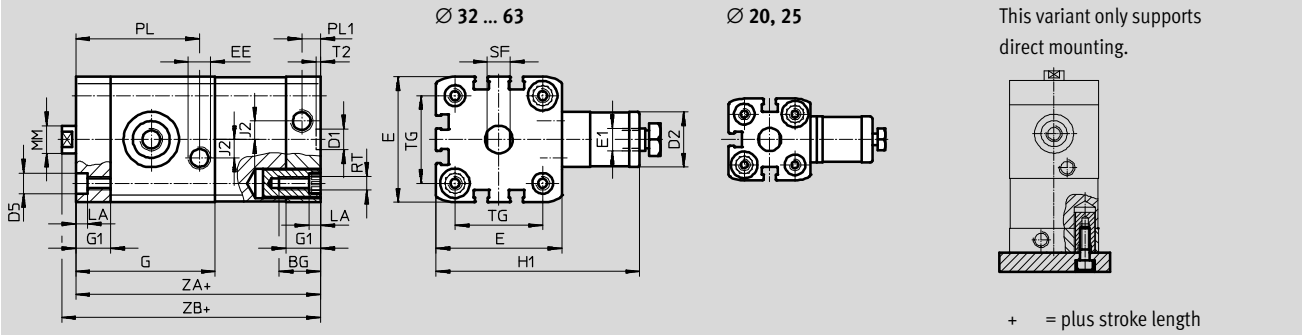

∅ 80, 100

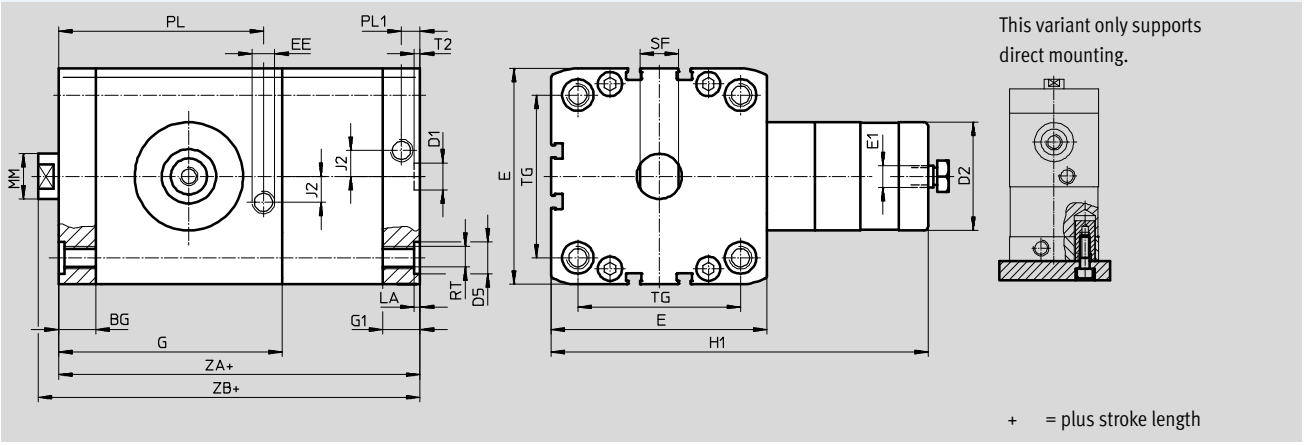

∅ [mm]	BG min.	D1 ∅ H9	D2 ∅	D5 ∅	E	E1	EE	G	G1	H1	J2
20	19.5	9	20	9^{F9}	35.5 +0.3	M5	M5	49.8	12	63	2.6
25					39.5 +0.3			50.6		65	
32	26				47 +0.3		G1/8	56.4	15	68	6
40			24		54.5 +0.3	G1/8		60.4		89	8
50	27	12	30	12^{F9}	65.5 +0.3			67.4		108	
63			38		75.5 +0.3			76.8		120	11.5
80	17		48	15	95.5 +0.6			99	16.5	167	
100	21.5				113.5 +0.6			99.6	21.5	176	20

∅ [mm]	LA +0.2	MM ∅	PL +0.2	PL1 +0.2	RT	SF h13	T2 +0.2	TG ±0.2	ZA ±0.3	ZB +1.2
20	5	10	42.8	6	M5	9	2.1	22	74.8	80.8
25			44.6					26	77.6	83.1
32		12	49.6	8.2	M6	10		32.5	85.4	91.4
40		16	53.6			13		38	90.4	96.5
50		20	60.6		M8	17	2.6	46.5	97.4	105.6
63			70					56.5	110.8	118.9
80	2.6	25	90.7		M10	21		72	136.5	145.4
100			88.6	10.5				89	145.1	154.1

Dimensions – Variants Download CAD data ➔ **www.festo.com**

Basic version

1 Hex nut to DIN 439-B only with ∅ 32 ... 100

\+ = plus stroke length

K2 – Extended male piston rod thread

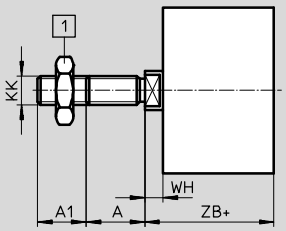

1 Hex nut to DIN 439-B only with ∅ 32 ... 100

\+ = plus stroke length

K5 – Special piston rod thread

\+ = plus stroke length

K8 – Extended piston rod

1 Hex nut to DIN 439-B only with ∅ 32 ... 100

\+ = plus stroke length

Compact cylinders ADN-KP, standard port pattern, with clamping unit

Technical data

∅ [mm]	A −0.5	A1	A2	AF min.	AF5 min.	KF	KF5
20	16	1 … 20	1 … 300	14	12	M6	M5
25							
32	19		1 … 400	16	14	M8	M6
40							
50	22			20	16	M10	M8
63							
80	28	1 … 30	1 … 500		20	M12	M10
100							

∅ [mm]	KK	KK5	T3	T4	WH +1.3	ZB +1.2
20	M8	M10x1.25	2	2.6	5.5	80.8
25		M10				83.1
32	M10x1.25	M10	2.6	3.3	6	91.4
40		M12			6.1	96.5
50	M12x1.25	M12	3.3	4.7	8.2	105.6
63		M16			8.1	118.9
80	M16x1.5	M16	4.7	6.1	8.9	145.4
100		M20x1.5 M20			9	154.1

Compact cylinders ADN-KP, standard port pattern, with clamping unit

Ordering data – Modular products

Ordering table									
Size		20	25	32	40	Condi-tions	Code		Enter code
M	Module No.	**548206**	**548207**	**548208**	**548209**				
	Function	Compact cylinder, double-acting, standard port pattern, with clamping unit					**ADN**		ADN
	Piston ∅ [mm]	20	25	32	40		**-...**		
	Stroke [mm]	10 ... 300		10 ... 400			**-...**		
	Clamping unit	Integrated					**-KP**		-KP
	Piston rod thread	Male thread					**-A**		
		Female thread				1	**-I**		
	Cushioning	Flexible cushioning rings/pads at both ends					**-P**		-P
	Position sensing	Via proximity sensor					**-A**		-A
O	Male thread extended [mm]	Extended male piston rod thread 1 ... 20					**-...K2**		
	Special piston rod thread – Male thread	M10x1.25 M10	M10x1.25 M10	M10 M12	M10 M12		**-"..."K5**		
	Special piston rod thread – Female thread	M5	M5	M6	M6				
	Piston rod extended [mm]	Extended piston rod 1 ... 300		1 ... 400		2	**-...K8**		
	Captive rating plate	Laser etched rating plate					**-TL**		

1 **I** Not with extended male thread K2

2 **K8** The sum of the stroke length and piston rod extension must not exceed the maximum permissible stroke length

M Mandatory data

O Options

Transfer order code

	ADN	–		–		–	KP	–		–	P	–	A

Compact cylinders ADN-KP, standard port pattern, with clamping unit

Ordering data – Modular products

Ordering table									
Size		50	63	80	100	Condi-tions	Code		Enter code
M	Module No.	**548210**	**548211**	**548212**	**548213**				
	Function	Compact cylinder, double-acting, standard port pattern, with clamping unit					**ADN**		ADN
	Piston ∅ [mm]	50	63	80	100		**-...**		
	Stroke [mm]	10 ... 400		10 ... 500			**-...**		
	Clamping unit	Integrated					**-KP**		-KP
	Piston rod thread	Male thread					**-A**		
		Female thread				1	**-I**		
	Cushioning	Flexible cushioning rings/pads at both ends					**-P**		-P
	Position sensing	Via proximity sensor					**-A**		-A
O	Male thread extended [mm]	Extended male piston rod thread 1 ... 20		1 ... 30			**-...K2**		
	Special piston rod thread – Male thread	M12 M16	M12 M16	M16 M20 M20x1.5	M16 M20 M20x1.5		**-"..."K5**		
	Special piston rod thread – Female thread	M8	M8	M10	M10				
	Piston rod extended [mm]	Extended piston rod 1 ... 400		1 ... 500		2	**-...K8**		
	Captive rating plate	Laser etched rating plate					**-TL**		

1 **I** Not with extended male thread K2

2 **K8** The sum of the stroke length and piston rod extension must not exceed the maximum permissible stroke length

M Mandatory data
O Options

Transfer order code

– [ ] – [ ] – [ ] – [ ]

Compact cylinders ADN-EL, standard port pattern, with end position lock

Type codes

ADN	–	20	–	100	–	ELV	–	A	–	P	–	A	–	K2

Type	
Double-acting	
ADN	Compact cylinder

Piston ∅ [mm]

Stroke [mm]

End position lock	
ELB	At both ends
ELV	At front
ELH	At rear

Piston rod thread	
A	Male thread
I	Female thread

Cushioning	
P	Flexible cushioning rings/pads at both ends

Position sensing	
A	Via proximity sensor

Variant	
K2	Extended male piston rod thread
K5	Special piston rod thread
K8	Extended piston rod
TL	Captive rating plate

Compact cylinders ADN-EL, standard port pattern, with end position lock

Technical data

Function

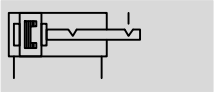

- Diameter
  20 … 100 mm
- Stroke length
  10 … 500 mm

Variants

K2

K5

K8

- Note

Additional measures are required for use in safety-related control systems; in Europe, for example, the standards listed under the EC Machinery Directive must be observed. Without additional measures in accordance with statutory minimum requirements, the product is not suitable for use in safety-related sections of control systems.

General technical data								
Piston ∅	20	25	32	40	50	63	80	100
Pneumatic connection	M5	M5	G1/8	G1/8	G1/8	G1/8	G1/8	G1/8
Female piston rod thread								
–	M6		M8		M10		M12	
K5	M5		M6		M8		M10	
Male piston rod thread								
–	M8		M10x1.25		M12x1.25		M16x1.5	
K5	M10; M10x1.25		M10; M12		M12; M16		M16; M20; M20x1.5	
Max. axial backlash with end position locked [mm]	1.3						2.1	
Constructional design	Piston							
	Piston rod							
	Cylinder barrel							
End position lock								
ELB	At both ends							
ELV	At front							
ELH	At rear							
Cushioning	Flexible cushioning rings/pads at both ends							
Position sensing	Via proximity sensor							
Type of mounting	Via female threads							
	Via accessories							
Mounting position	Any							

- Note

- No screws with a head or similar may be used in place of the end position lock, as there is a risk that the function will be impaired if they are screwed in too deeply.
- The exhaust hole must not be closed.
- Locking can be performed from any stroke position, once the drive is brought mechanically into its end position.
- The end position lock has been designed to guard against the load dropping in case of pressure failure.
- Operation of the cylinder in conjunction with a 3-way valve (especially with the function “mid-position closed” and those with “metallic sealing”) should be avoided. The residual pressure that is enclosed on the locking side of the cylinder can release the locking function.
- The cylinder must not be operated with external stops (e.g. shock absorber, buffer, oil brake, etc.):
  - It may not be possible to reliably reach the internal end position.
  - The locking mechanism can wear out prematurely. (In the event of pressure drop in the opposite chamber to less than the locking pressure, the locking piston will prematurely fall to its end position.)

Operating and environmental conditions								
Piston ∅	20	25	32	40	50	63	80	100
Operating medium	Compressed air in accordance with ISO 8573-1:2010 [7:4:4]							
Note on operating/pilot medium	Operation with lubricated medium possible (in which case lubricated operation will always be required)							
Operating pressure [bar]	2.5 … 10				1.5 … 10			
Ambient temperature[1] [°C]	−20 … +80							
Corrosion resistance class CRC[2]	2							

1) Note operating range of proximity sensors
2) Corrosion resistance class CRC 2 to Festo standard FN 940070
Moderate corrosion stress. Indoor applications in which condensation may occur. External visible parts with primarily decorative requirements for the surface and which are in direct contact with the ambient atmosphere typical for industrial applications.

Forces [N]								
Piston ∅	20	25	32	40	50	63	80	100
Theoretical force at 6 bar, advancing	188	295	483	754	1178	1870	3016	4712
Theoretical force at 6 bar, retracting	141	247	415	686	1057	1750	2827	4524
Static holding force	250	500			2000		5000	

Sizing example

Note

When sizing pneumatic cylinders it is recommended as a basic principle that only 50% of the indicated theoretical forces (see above) be used.

Given:
Installation position = Vertical
Workpiece load = 44 kg
F = m x g = 44 kg x 9.81 m/s^2
= 431.6 N

To be calculated:
Suitable piston ∅

Analysis with 32 mm piston ∅:
Theoretical force at 6 bar, advancing = 483 N
50% of the theoretical force = 241.5 N
Static holding force with 32 mm piston ∅ = 500 N
The static force on the end position lock is within the permissible range (max. 500 N) with a workpiece load of 44 kg (431.6 N), however the cylinder would be at 89% capacity.
Result:
A cylinder with a piston ∅ of 40 mm is therefore recommended for this application.

Impact energy [J]								
Piston ∅	20	25	32	40	50	63	80	100
Max. impact energy at the end positions	0.2	0.3	0.4	0.7	1	1.3	1.8	2.5

Permissible impact velocity:

$$v_{perm.} = \sqrt{\frac{2 \times E_{perm.}}{m_{dead} + m_{load}}}$$

Maximum permissible load:

$$m_{load} = \frac{2 \times E_{perm.}}{v^2} - m_{dead}$$

$v_{perm.}$ Permissible impact velocity
$E_{perm.}$ Max. impact energy
m_{dead} Moving load (drive)
m_{load} Moving work load

Note

These specifications represent the maximum values which can be reached. Note the maximum permitted impact energy.

Max. lateral force Fq as a function of the projection x

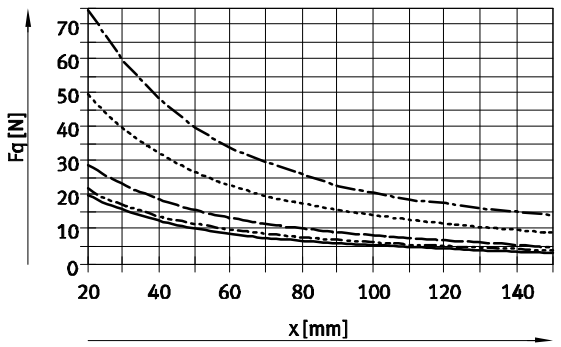

- ∅ 20
- ∅ 25
- ∅ 32/40
- ∅ 50/63
- ∅ 80/100

Compact cylinders ADN-EL, standard port pattern, with end position lock

Technical data

Weight [g]								
Piston ∅	20	25	32	40	50	63	80	100
End position lock at both ends								
Product weight with 0 mm stroke	234	339	518	665	1334	1734	3300	4735
Additional weight per 10 mm stroke	22	26	29	38	51	59	79	98
Moving load with 0 mm stroke	43	53	85	101	199	248	475	637
Additional load per 10 mm stroke	6	6	9	9	16	16	25	25
End position lock at front								
Product weight with 0 mm stroke	177	248	387	498	922	1228	2296	3448
Additional weight per 10 mm stroke	22	26	29	38	51	59	79	98
Moving load with 0 mm stroke	35	46	75	98	175	225	464	626
Additional load per 10 mm stroke	6	6	9	9	16	16	25	25
End position lock at rear								
Product weight with 0 mm stroke	181	252	380	505	920	1217	2233	3409
Additional weight per 10 mm stroke	22	26	29	38	51	59	79	98
Moving load with 0 mm stroke	37	45	73	89	168	217	413	582
Additional load per 10 mm stroke	6	6	9	9	16	16	25	25

Materials

Sectional view

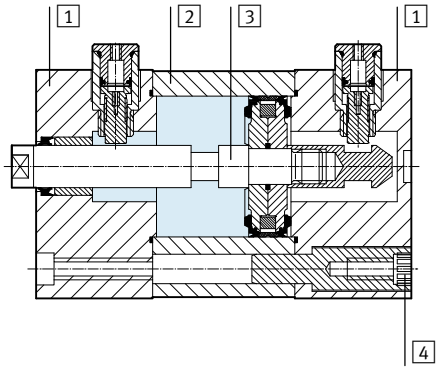

Compact cylinder			
1	Cover		Anodised aluminium
2	Cylinder barrel		Anodised aluminium
3	Piston rod		High-alloy steel
4	Flange screws	∅ 20 ... 63	Galvanised steel
		∅ 80 ... 100	Standard screws, galvanised steel
–	Seals		Polyurethane, nitrile rubber
	Note on materials		RoHS compliant

Dimensions – Basic version Download CAD data ➔ **www.festo.com**

ELB – End position lock at both ends

∅ 20 … 63

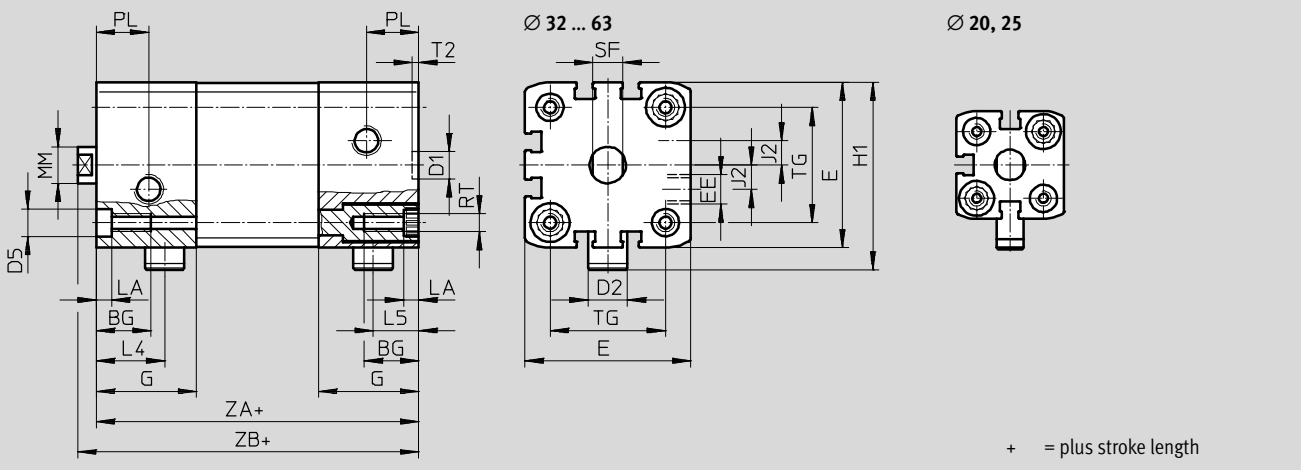

∅ 80 … 100

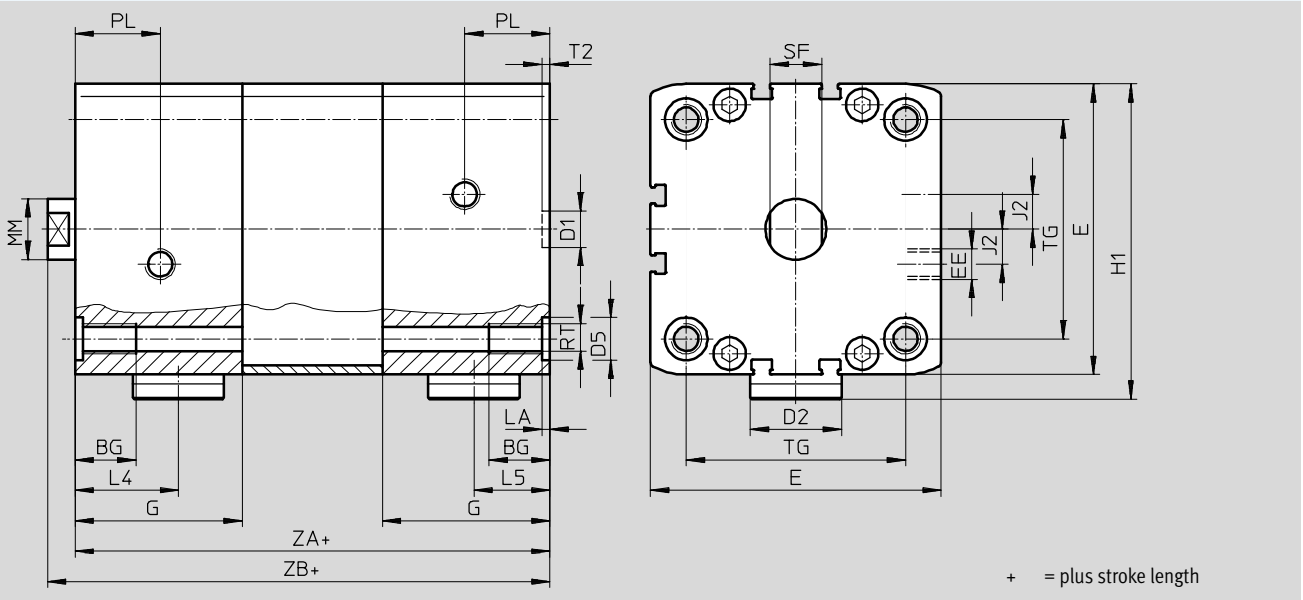

ELV – End position lock at front

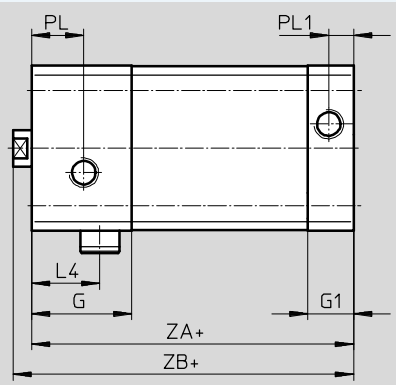

ELH – End position lock at rear

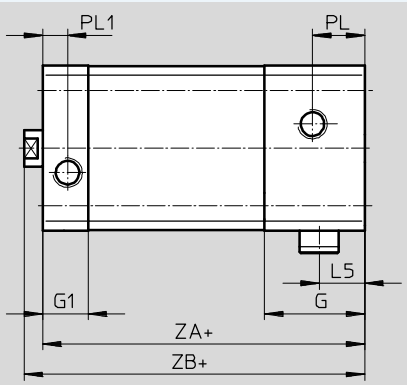

+ = plus stroke length

Compact cylinders ADN-EL, standard port pattern, with end position lock

Technical data

∅ [mm]	BG min.	D1 ∅ H9	D2 ∅	D5 ∅	E	EE	G	G1	H1	J2	L4	L5
20	18	9	9	9^{F9}	35.5 +0.3	M5	25	12	45.5	2.6	18.5	12.5
25			13		39.5 +0.3		29.5		53.3		20.8	14
32					47 +0.3	G1/8	33	15	58	6	22.5	15
40					54.5 +0.3				61.8	8		
50	20	12	20	12^{F9}	65.5 +0.3		43		77		27.5	20.5
63					75.5 +0.3				82	11.5		21.7
80			30	15	95.5 +0.6		55	16.5	103.5		34	25
100					113.5 +0.6		57	21.5	113.5	20	35	27

∅ [mm]	LA +0.2	MM ∅	PL	PL1	RT	SF h13	T2 +0.1	TG ±0.2	ZA ±0.3		ZB +1.2	
									ELB	ELV, ELH	ELB	ELV, ELH
20	5	10	6	6	M5	9	2.1	22	63	50	68.8	55.5
25								26	74	56.5	79.5	62
32		12	16	8.2	M6	10		32.5	80	62	86	68
40								38	81	63	87.1	69
50		16	21		M8	13	2.6	46.5	101	73	109.2	81.2
63								56.5	105	77	113.1	85.1
80	2.6	20	28		M10	17		72	131	92.5	139.9	101.4
100				10.5				89	138	102.5	147	111.5

Dimensions – Variants Download CAD data ➔ **www.festo.com**

Basic version

1 Hex nut to DIN 439-B only with ∅ 32 ... 100

\+ = plus stroke length

K2 – Extended male piston rod thread

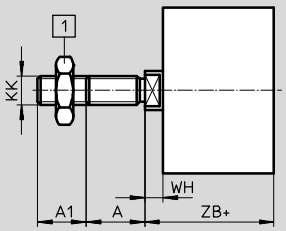

1 Hex nut to DIN 439-B only with ∅ 32 ... 100

\+ = plus stroke length

K5 – Special piston rod thread

\+ = plus stroke length

K8 – Extended piston rod

1 Hex nut to DIN 439-B only with ∅ 32 ... 100

\+ = plus stroke length

Compact cylinders ADN-EL, standard port pattern, with end position lock

Technical data

∅ [mm]	A −0.5	A1	A2	AF min.	AF5 min.	KF	KF5
20	16	1 ... 20	1 ... 300	14	12	M6	M5
25							
32	19		1 ... 400	16	14	M8	M6
40							
50	22			20	16	M10	M8
63							
80	28	1 ... 30	1 ... 500		20	M12	M10
100							

∅ [mm]	KK	KK5	T3	T4	WH +1.3	ZB +1.2	
						ELB	ELV, ELH
20	M8	M10x1.25	2	2.6	5.5	68.8	55.5
25		M10				79.5	62
32	M10x1.25	M10	2.6	3.3	6	86	68
40		M12			6.1	87.1	69
50	M12x1.25	M12	3.3	4.7	8.2	109.2	81.2
63		M16			8.1	113.1	85.1
80	M16x1.5	M16	4.7	6.1	8.9	139.9	101.4
100		M20x1.5 M20			9	147	111.5

Compact cylinders ADN-EL, standard port pattern, with end position lock

Ordering data – Modular products

Ordering table

	Size	20	25	32	40	Condi-tions	Code		Enter code
M	Module No.	**548214**	**548215**	**548216**	**548217**				
	Function	Compact cylinder, double-acting, standard port pattern, with end position lock					**ADN**		ADN
	Piston ∅ [mm]	20	25	32	40		**-...**		
	Stroke [mm]	10 ... 300		10 ... 400			**-...**		
	End position lock	At both ends					**-ELB**		
		At front					**-ELV**		
		At rear					**-ELH**		
	Piston rod thread	Male thread					**-A**		
		Female thread				1	**-I**		
	Cushioning	Flexible cushioning rings/pads at both ends					**-P**		-P
	Position sensing	Via proximity sensor					**-A**		-A
O	Male thread extended [mm]	Extended male piston rod thread 1 ... 20					**-...K2**		
	Special piston rod thread – Male thread	M10x1.25 M10	M10x1.25 M10	M10 M12	M10 M12		**-"..."K5**		
	Special piston rod thread – Female thread	M5	M5	M6	M6				
	Piston rod extended [mm]	Extended piston rod 1 ... 300		1 ... 400		2	**-...K8**		
	Captive rating plate	Laser etched rating plate					**-TL**		

1 **I** Not with extended male thread K2

2 **K8** The sum of the stroke length and piston rod extension must not exceed the maximum permissible stroke length

M Mandatory data
O Options

Transfer order code

	ADN	–		–		–		–		–	P	–	A

Compact cylinders ADN-EL, standard port pattern, with end position lock

Ordering data – Modular products

Ordering table									
	Size	50	63	80	100	Conditions	Code		Enter code
M	Module No.	**548218**	**548219**	**548220**	**548221**				
	Function	Compact cylinder, double-acting, standard port pattern, with end position lock					**ADN**		ADN
	Piston ∅ [mm]	50	63	80	100		**-...**		
	Stroke [mm]	10 ... 400		10 ... 500			**-...**		
	End position lock	At both ends					**-ELB**		
		At front					**-ELV**		
		At rear					**-ELH**		
	Piston rod thread	Male thread					**-A**		
		Female thread				1	**-I**		
	Cushioning	Flexible cushioning rings/pads at both ends					**-P**		-P
	Position sensing	Via proximity sensor					**-A**		-A
O	Male thread extended [mm]	Extended male piston rod thread 1 ... 20		1 ... 30			**-...K2**		
	Special piston rod thread – Male thread	M12 M16	M12 M16	M16 M20 M20x1.5	M16 M20 M20x1.5		**-"..."K5**		
	Special piston rod thread – Female thread	M8	M8	M10	M10				
	Piston rod extended [mm]	Extended piston rod 1 ... 400		1 ... 500		2	**-...K8**		
	Captive rating plate	Laser etched rating plate					**-TL**		

1 **I** Not with extended male thread K2

2 **K8** The sum of the stroke length and piston rod extension must not exceed the maximum permissible stroke length

M Mandatory data
O Options

Transfer order code

– [ ] – [ ] – [ ] – [ ]

Compact cylinders AEN, to ISO 21287

Type codes

AEN	–	50	–	25	–	A	–	P	–	A	–	Q

Type	
Single-acting	
AEN	Compact cylinder

Piston ∅ [mm]

Stroke [mm]

Piston rod thread	
A	Male thread
I	Female thread

Cushioning	
P	Flexible cushioning rings/pads at both ends

Position sensing	
A	Via proximity sensor

Variant	
Z	Single-acting, pulling
Q	Square piston rod
K2	Extended male piston rod thread
K5	Special piston rod thread
K8	Extended piston rod
K10	Smooth anodised piston rod
S6	Heat-resistant seals up to max. 120 °C
TL	Captive rating plate

Compact cylinders AEN, to ISO 21287

Technical data

Function

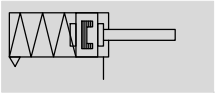

pulling

- Diameter
  12 ... 100 mm

- Stroke length
  1 ... 25 mm

- www.festo.com

Variants

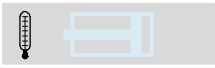

S6

K2

K5

K8

K10

Q

AEN- ... -A-P-A

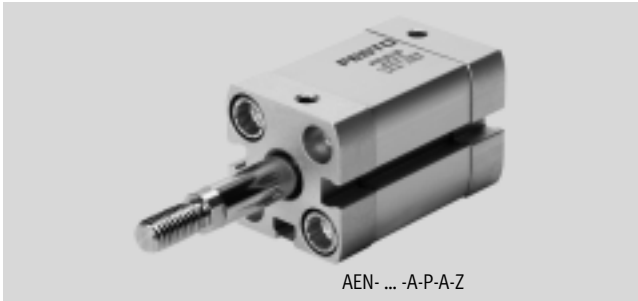

AEN- ... -A-P-A-Z

General technical data										
Piston ∅	12	16	20	25	32	40	50	63	80	100
Design	Piston									
	Piston rod									
	Cylinder barrel									
Cushioning	Flexible cushioning rings/pads at both ends									
Position sensing	Via proximity sensor									
Type of mounting	Via through-hole									
	Via female thread									
	Via accessories									
Mounting position	Any									

Technical data – Basic version and variants					
Piston ∅	12	16	20	25	32
Pneumatic connection	M5	M5	M5	M5	G⅛
Female piston rod thread					
–	M3	M4	M6	M6	M8
K5	–	–	M5	M5	M6
Male piston rod thread					
–	M5	M6	M8	M8	M10x1.25
K5	M6	M8	M10; M10x1.25	M10; M10x1.25	M10; M12
Q-K5	–	M8	M10; M10x1.25	M10; M10x1.25	M10

Piston ∅	40	50	63	80	100
Pneumatic connection	G1/8	G1/8	G1/8	G1/8	G1/8
Female piston rod thread					
–	M8	M10	M10	M12	M12
K5	M6	M8	M8	M10	M10
Male piston rod thread					
–	M10x1.25	M12x1.25	M12x1.25	M16x1.5	M16x1.5
K5	M10; M12	M12; M16	M12; M16	M16; M20; M20x1.5	M16; M20; M20x1.5
Q-K5	M10	M12	M12	M16	M16

Operating and environmental conditions										
Piston ∅	12	16	20	25	32	40	50	63	80	100
Operating medium	Compressed air in accordance with ISO 8573-1:2010 [7:4:4]									
Note on operating/pilot medium	Operation with lubricated medium possible (in which case lubricated operation will always be required)									
Operating pressure [bar]										
–	1.5 … 10		1 … 10							
Z	1.7 … 10	2.2 … 10	1.3 … 10		0.7 … 10	0.6 … 10				
Q	1.5 … 10		1 … 10							
Ambient temperature[1] [°C]										
–	−20 … +80									
S6	0 … +120									
Corrosion resistance class CRC[2]	2									

1) Note operating range of proximity sensors
2) Corrosion resistance class CRC 2 to Festo standard FN 940070
Moderate corrosion stress. Indoor applications in which condensation may occur. External visible parts with primarily decorative requirements for the surface and which are in direct contact with the ambient atmosphere typical for industrial applications.

Forces [N] and impact energy [J]										
Piston ∅	12	16	20	25	32	40	50	63	80	100
AEN										
Theoretical force at 6 bar, advancing	56	95	162	259	441	702	1098	1783	2899	4511
AEN-…-Z, pulling										
Theoretical force at 6 bar, retracting	39	65	115	211	373	634	977	1663	2610	4323
Max. impact energy in the end positions	0.04	0.04	0.04	0.08	0.1	0.15	0.18	0.28	0.35	0.7

Permissible impact velocity:

$$v_{perm.} = \sqrt{\frac{2 \times E_{perm.}}{m_{dead} + m_{load}}}$$

Maximum permissible load:

$$m_{load} = \frac{2 \times E_{perm.}}{v^2} - m_{dead}$$

$v_{perm.}$ Permissible impact velocity
$E_{perm.}$ Max. impact energy
m_{dead} Moving load (drive)
m_{load} Moving effective load

Note

This data represents the maximum values that can be achieved. The maximum permissible impact energy must be observed.

Spring return force F as a function of the stroke l

∅ 12 … 20

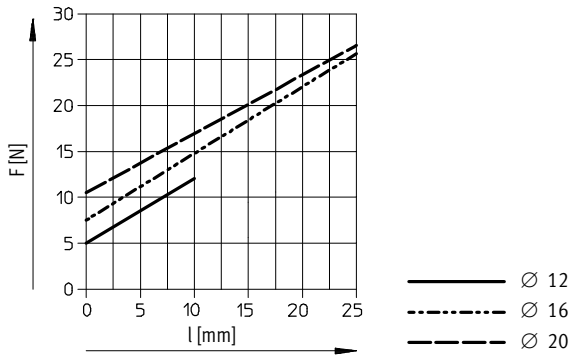

∅ 25 … 100

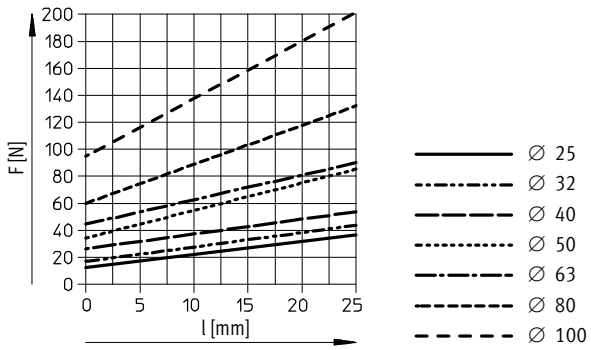

Note

The degree of friction depends upon the mounting position and the type of load involved. Single-acting cylinders should as far as possible be operated without lateral forces.

Weight [g]										
Piston ∅	12	16	20	25	32	40	50	63	80	100
Product weight with 0 mm stroke	77	79	131	156	265	346	540	722	1300	2154
Additional weight per 10 mm stroke	12	14	21	23	30	37	51	59	79	98
Moving load with 0 mm stroke	9	15	30	50	60	80	140	180	400	570
Additional load per 10 mm stroke	2	4	6	6	9	9	16	16	25	25

Materials

Sectional view

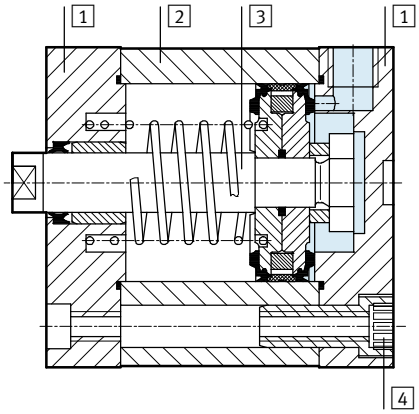

Compact cylinder			Basic version	S6
1	Bearing and end cap	∅ 12 … 80	Anodised aluminium	
		∅ 100	Coated die-cast aluminium	
2	Cylinder barrel		Anodised aluminium	
3	Piston rod		High-alloy steel	
4	Flange screws	∅ 12 … 16	High-alloy steel	
		∅ 20 … 63	Galvanised steel	
		∅ 80 … 100	Standard screws, galvanised steel	
–	Seals		Polyurethane	Fluoro elastomer
	Note on materials		RoHS-compliant	

Dimensions – Basic version Download CAD data ➔ **www.festo.com**

∅ 12 ... 63

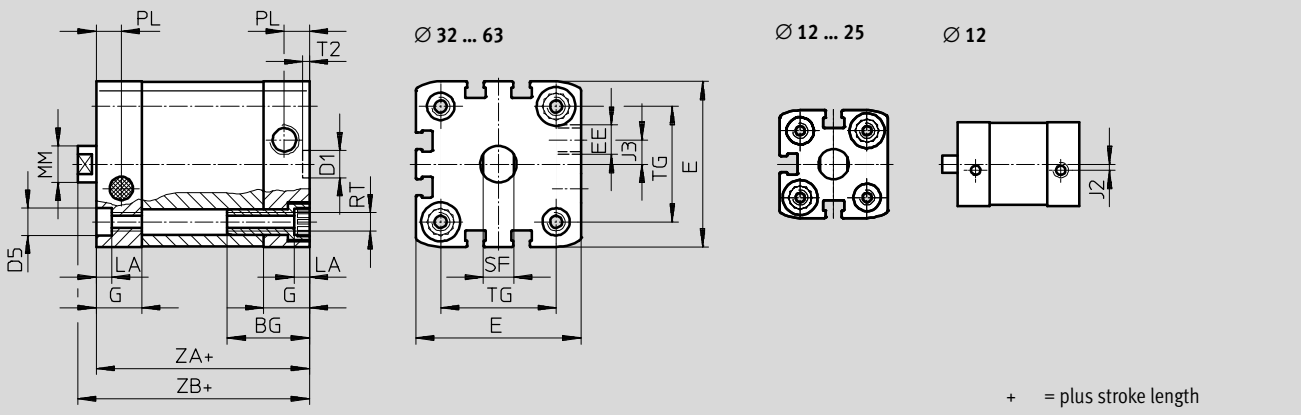

∅ 80 ... 100

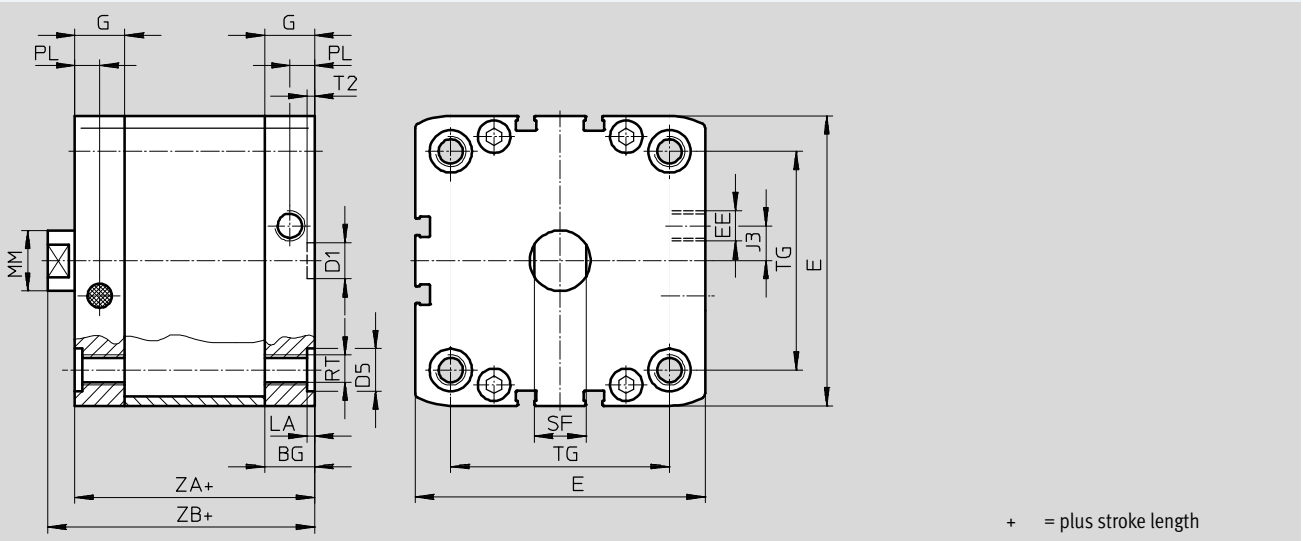

Compact cylinders AEN, to ISO 21287

Technical data

∅ [mm]	BG min.	D1 ∅ H9	D5 ∅	E	EE	G	J2	J3	LA +0.2
12	17	9	6^{F9}	27.5 +0.3	M5	10.5	2	–	3.5
16				29 +0.3		11	2.6		
20	19.5		9^{F9}	35.5 +0.3		12			5
25				39.5 +0.3					
32	26			47 +0.3	G1/8	15	6		
40				54.5+0.3			8		
50	27	12	12^{F9}	65.5 +0.3					
63				75.5 +0.3			11.5		
80	17		15	95.5 +0.6		16.5			2.6
100	21.5			113.5 +0.6		21.5	20		

∅ [mm]	MM ∅	PL +0.2	RT	SF h13	T2 +0.1	TG ±0.2	ZA ±0.3	ZB +1.2
12	6	6	M4	5	2.1	16	35	39.2
16	8			7		18		39.7
20	10		M5	9		22	37	42.5
25						26	39	44.5
32	12	8.2	M6	10		32.5	44	50
40						38	45	51.1
50	16		M8	13	2.6	46.5		53.2
63						56.5	49	57.1
80	20		M10	17		72	54	62.9
100		10.5				89	67	76

Dimensions – Variants

Download CAD data ➔ **www.festo.com**

Basic version

1 Hex nut DIN 439-B
only with ∅ 32 ... 100

\+ = plus stroke length

Z – pulling

1 Hex nut DIN 439-B
only with ∅ 32 ... 100

\+ = plus stroke length
++ = plus 2x stroke length

K2 – Extended male piston rod thread

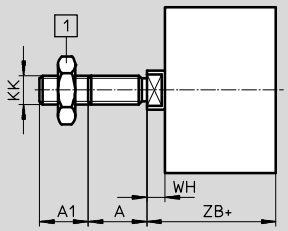

1 Hex nut DIN 439-B
only with ∅ 32 ... 100

\+ = plus stroke length

K5 – Special piston rod thread

\+ = plus stroke length

K8 – Extended piston rod

1 Hex nut DIN 439-B
only with ∅ 32 ... 100

\+ = plus stroke length

∅ [mm]	A −0.5	A1	A2	AF min.	AF5 min.	KF	KF5
12	10	1 … 10	1 … 300	8	–	M3	–
16	12			10		M4	
20	16	1 … 20		14	12	M6	M5
25							
32	19		1 … 400	16	14	M8	M6
40							
50	22			20	16	M10	M8
63							
80	28	1 … 30	1 … 500		20	M12	M10
100							

∅ [mm]	KK	KK5	T3	T4	WH +1.3	ZB +1.2
12	M5	M6	–	1.5	4.2	39.2
16	M6	M8			4.7	39.7
20	M8	M10x1.25	2	2.6	5.5	42.5
25		M10				44.5
32	M10x1.25	M10	2.6	3.3	6	50
40		M12			6.1	51.1
50	M12x1.25	M12	3.3	4.7	8.2	53.2
63		M16			8.1	57.1
80	M16x1.5	M16 M20x1.5	4.7	6.1	8.9	62.9
100		M20			9	76

Dimensions – Variants Download CAD data ➔ **www.festo.com**

Q – Square piston rod

1 Hex nut DIN 439-B
only with ∅ 32 ... 100

\+ = plus stroke length

Q – Z – pulling

1 Hex nut DIN 439-B
only with ∅ 32 ... 100

\+ = plus stroke length
++ = plus 2x stroke length

Q-K2 – Square piston rod with extended male thread

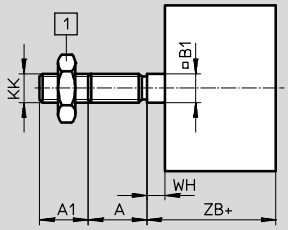

1 Hex nut DIN 439-B
only with ∅ 32 ... 100

\+ = plus stroke length

Q-K5 – Square, special piston rod thread

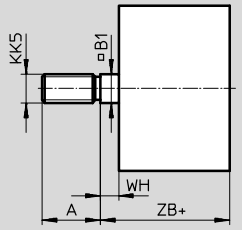

\+ = plus stroke length

Q-K8 – Square, extended piston rod

1 Hex nut DIN 439-B
only with ∅ 32 ... 100

\+ = plus stroke length

∅ [mm]	A −0.5	A1	A2	AF3 min.	B1 □	KF3
16	12	1 … 10	1 … 300	10	7	M4
20	16	1 … 20		12	9	M5
25						
32	19		1 … 400	14	10	M6
40						
50	22			16	12	M8
63						
80	28	1 … 30	1 … 500	20	16	M10
100						

∅ [mm]	KK	KK5	T2	WH +1.3	ZB +1.2
16	M6	M8	1.5	4.7	39.7
20	M8	M10x1.25	2	5.5	42.5
25		M10			44.5
32	M10x1.25	M10	2.6	6	50
40				6.1	51.1
50	M12x1.25	M12	3.3	8.2	53.2
63				8.1	57.1
80	M16x1.5	M16	4.7	8.9	62.9
100				9	76

Compact cylinders AEN, to ISO 21287

Ordering data – Modular products, basic version and variants

FESTO

Ordering table										
Size		12	16	20	25	32	Condi-tions	Code		Enter code
M	Module No.	**536414**	**536415**	**536416**	**536417**	**536418**				
	Function	Compact cylinder, single-acting, based on ISO 21287						**AEN**		AEN
	Piston ∅ [mm]	12	16	20	25	32		**-...**		
	Stroke [mm]	1 ... 10	1 ... 25					**-...**		
	Type of thread	Male thread						**-A**		
		Female thread					1	**-I**		
	Cushioning	Flexible cushioning rings/pads at both ends						**-P**		-P
	Position sensing	Via proximity sensor						**-A**		-A
O	Effective direction of action	Single-acting, pulling						**-Z**		
	Male thread extended [mm]	Extended male piston rod thread 1 ... 10		1 ... 20			2	**-...K2**		
	Special piston rod thread – Male thread	M6	M8	M10x1.25 M10	M10x1.25 M10	M10 M12	2	**-"..."K5**		
	Special piston rod thread – Female thread	–	–	M5	M5	M6				
	Piston rod extended [mm]	Extended piston rod 1 ... 10	1 ... 25					**-...K8**		
	Improved running performance	–	–	Smooth anodised aluminium coated piston rod				**-K10**		
	Temperature resistance	Heat-resistant seals up to max. 120 °C						**-S6**		
	Captive rating plate	Laser etched rating plate						**-TL**		

1 **I** Not with extended male thread K2

2 **K2, K5** Not with improved running performance K10

M Mandatory data

O Options

Transfer order code

	AEN	–		–		–		–	**P**	–	**A**

Compact cylinders AEN, to ISO 21287

Ordering data – Modular products, basic version and variants

FESTO

Ordering table										
Size		40	50	63	80	100	Condi-tions	Code		Enter code
M	Module No.	**536419**	**536420**	**536421**	**536422**	**536423**				
	Function	Compact cylinder, single-acting, based on ISO 21287						**AEN**		AEN
	Piston ∅ [mm]	40	50	63	80	100		**-...**		
	Stroke [mm]	1 ... 25						**-...**		
	Type of thread	Male thread						**-A**		
		Female thread					1	**-I**		
	Cushioning	Flexible cushioning rings/pads at both ends						**-P**		-P
	Position sensing	Via proximity sensor						**-A**		-A
O	Effective direction of action	Single-acting, pulling						**-Z**		
	Male thread extended [mm]	Extended male piston rod thread 1 ... 20			1 ... 30		2	**-...K2**		
	Special piston rod thread – Male thread	M10 M12	M12 M16	M12 M16	M16 M20 M20x1.5	M16 M20 M20x1.5	2	**-"..."K5**		
	Special piston rod thread – Female thread	M6	M8	M8	M10	M10				
	Piston rod extended [mm]	Extended piston rod 1 ... 25						**-...K8**		
	Improved running performance	Smooth anodised aluminium coated piston rod						**-K10**		
	Temperature resistance	Heat-resistant seals up to max. 120 °C						**-S6**		
	Captive rating plate	Laser etched rating plate						**-TL**		

1 **I** Not with extended male thread K2

2 **K2, K5** Not with improved running performance K10

M Mandatory data

O Options

Transfer order code

– [ ] – [ ] – [ ] – [ ] – [ ] – [ ] – [ ]

Compact cylinders AEN, to ISO 21287

Ordering data – Modular products, Q – Version with square piston rod, non-rotating

Ordering table

	Size	16	20	25	32	Condi-tions	Code		Enter code
M	Module No.	**536415**	**536416**	**536417**	**536418**				
	Function	Compact cylinder, single-acting, based on ISO 21287					**AEN**		AEN
	Piston ∅ [mm]	16	20	25	32		**-...**		
	Stroke [mm]	1 ... 25					**-...**		
	Type of thread	Male thread					**-A**		
		Female thread				1	**-I**		
	Cushioning	Flexible cushioning rings/pads at both ends					**-P**		-P
	Position sensing	Via proximity sensor					**-A**		-A
O	Effective direction of action	Single-acting, pulling					**-Z**		
	Protection against torsion	Square piston rod					**-Q**		-Q
	Male thread extended [mm]	Extended male piston rod thread 1 ... 10	1 ... 20				**-...K2**		
	Special piston rod thread Male thread	M8	M10x1.25 M10	M10x1.25 M10	M10		**-"..."K5**		
	Piston rod extended [mm]	Extended piston rod 1 ... 25					**-...K8**		
	Temperature resistance	Heat-resistant seals up to max. 120 °C					**-S6**		
	Captive rating plate	Laser etched rating plate					**-TL**		

1 I Not with extended male thread K2

M Mandatory data
O Options

Transfer order code

	AEN	–		–		–		–	**P**	–	**A**

Compact cylinders AEN, to ISO 21287

Ordering data – Modular products, Q – Version with square piston rod, non-rotating

Ordering table

	Size	40	50	63	80	100	Conditions	Code		Enter code
M	Module No.	**536419**	**536420**	**536421**	**536422**	**536423**				
	Function	Compact cylinder, single-acting, based on ISO 21287						**AEN**		AEN
	Piston ∅ [mm]	40	50	63	80	100		**-...**		
	Stroke [mm]	1 ... 25						**-...**		
	Type of thread	Male thread						**-A**		
		Female thread					1	**-I**		
	Cushioning	Flexible cushioning rings/pads at both ends						**-P**		-P
	Position sensing	Via proximity sensor						**-A**		-A
O	Effective direction of action	Single-acting, pulling						**-Z**		
	Protection against torsion	Square piston rod						**-Q**		-Q
	Male thread extended [mm]	Extended male piston rod thread 1 ... 20			1 ... 30			**-...K2**		
	Special piston rod thread Male thread	M10	M12	M12	M16	M16		**-"..."K5**		
	Piston rod extended [mm]	Extended piston rod 1 ... 25						**-...K8**		
	Temperature resistance	Heat-resistant seals up to max. 120 °C						**-S6**		
	Captive rating plate	Laser etched rating plate						**-TL**		

1 I Not with extended male thread K2

M Mandatory data
O Options

Transfer order code

– [ ] – [Q] – [ ] – [ ] – [ ] – [ ] – [ ]

Foot mounting HNA/HNA-...-R3

Material:
HNA: Galvanised steel
HNA-...-R3: Steel with protective coating
Free of copper and PTFE
RoHS-compliant

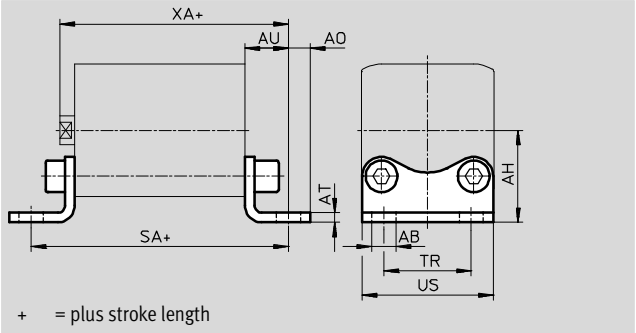

Dimensions and ordering data

For ∅ [mm]	AB ∅ H14	AH JS14	AO	AT ±0.5	AU ±0.2	SA	TR ±0.2	US –0.5	XA
12	5.8	21	5	3	13	61	16	26	52.2
16		22	4.75				18	27.5	52.9
20	7	27	6.25	4	16	69	22	34.5	58.7
25		29				71	26	38.5	60.7
32		33.5	7			76	32	46	66.2
40	10	38	9		18	81	36	54	69.2
50		45	8	5	21	87	45	64	74.2
63		50				91	50	75	78.2
80	12	63	10.5	6	26	106	63	63	89
100	14.5	74	12.5		27	121	75	110	103

For ∅ [mm]	Basic version				R3 – High corrosion protection			
	CRC[1)]	Weight [g]	Part No.	Type	CRC[1)]	Weight [g]	Part No.	Type
12	1	39	**537237**	**HNA-12**	3	39	**537252**	**HNA-12-R3**
16	1	42	**537238**	**HNA-16**	3	42	**537253**	**HNA-16-R3**
20	1	84	**537239**	**HNA-20**	3	84	**537254**	**HNA-20-R3**
25	1	90	**537240**	**HNA-25**	3	90	**537255**	**HNA-25-R3**
32	1	123	**537241**	**HNA-32**	3	123	**537256**	**HNA-32-R3**
40	1	157	**537242**	**HNA-40**	3	157	**537257**	**HNA-40-R3**
50	1	278	**537243**	**HNA-50**	3	278	**537258**	**HNA-50-R3**
63	1	328	**537244**	**HNA-63**	3	328	**537259**	**HNA-63-R3**
80	1	634	**537249**	**HNA-80**	3	634	**537260**	**HNA-80-R3**
100	1	814	**537250**	**HNA-100**	3	814	**537261**	**HNA-100-R3**

1) Corrosion resistance class CRC 1 to Festo standard FN 940070
Low corrosion stress. For dry indoor applications or transport and storage protection. Also applies to parts behind covers, in the non-visible interior area, and parts which are covered in the application (e.g. drive trunnions).
Corrosion resistance class CRC 3 to Festo standard FN 940070
High corrosion stress. Outdoor exposure under moderate corrosive conditions. External visible parts with primarily functional requirements for the surface and which are in direct contact with a normal industrial environment.

Flange mounting FNC

Material:
Galvanised steel
Free of copper and PTFE
RoHS-compliant

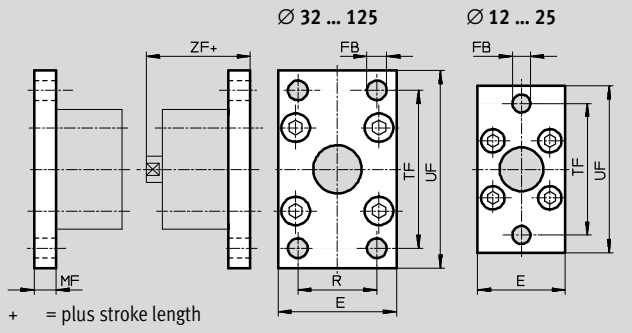

Dimensions and ordering data

For ∅ [mm]	E	FB ∅	MF	R	TF	UF ±1	ZF	CRC[1]	Weight [g]	Part No.	Type
12	28	5.5	8	–	40	50	47.2	1	79	**537245**	**FNC-12**
16	29				43	55	47.9	1	88	**537246**	**FNC-16**
20	36	6.6			55	70	50.7	1	141	**537247**	**FNC-20**
25	40				60	76	52.7	1	165	**537248**	**FNC-25**
32	45	7	10	32	64	80	60.2	1	221	★ **174376**	**FNC-32**
40	54	9		36	72	90	61.2	1	291	★ **174377**	**FNC-40**
50	65		12	45	90	110	65.2	1	536	★ **174378**	**FNC-50**
63	75			50	100	120	69.2	1	679	★ **174379**	**FNC-63**
80	93	12	16	63	126	150	79	1	1495	★ **174380**	**FNC-80**
100	110	14		75	150	175	92	1	2041	**174381**	**FNC-100**
125	132	16	20	90	180	210	112	1	3775	**174382**	**FNC-125**

1) Corrosion resistance class CRC 1 to Festo standard FN 940070
Low corrosion stress. For dry indoor applications or transport and storage protection. Also applies to parts behind covers, in the non-visible interior area, and parts which are covered in the application (e.g. drive trunnions).

Festo core product range
★ Ready for dispatch from the Festo factory in 24 hours
☆ Ready for dispatch in 5 days maximum from stock

Swivel flange
SNCL/SNCL-...-R3

Material:
SNCL: 12 ... 25: Wrought aluminium alloy
SNCL: 32 ... 125: Die-cast aluminium
SNCL-...-R3: Wrought aluminium alloy with protective coating
Free of copper and PTFE
RoHS-compliant

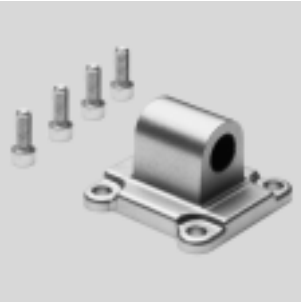

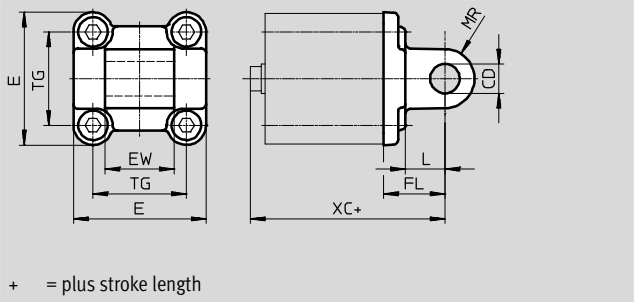

Dimensions and ordering data								
For ∅ [mm]	CD ∅ H9	E	EW	FL ±0.2	L	MR	TG	XC
12	6	$25_{-0.6}$	12_{h12}	16	10	6	16	55.2
16		$27.5_{-0.6}$					18	55.9
20	8	$34.5_{-0.6}$	16_{h12}	20	14	8	22	62.7
25		$38.5_{-0.6}$					26	64.7
32	10	$45_{+0.2/-0.5}$	$26_{-0.2/-0.6}$	22	13	10	32.5	72.2
40	12	$54_{-0.5}$	$28_{-0.2/-0.6}$	25	16	12	38	75.2
50		$64_{-0.6}$	$32_{-0.2/-0.6}$	27			46.5	80.2
63	16	$75_{-0.6}$	$40_{-0.2/-0.6}$	32	21	16	56.5	89.2
80		$93_{-0.8}$	$50_{-0.2/-0.6}$	36	22		72	99
100	20	$110_{-+0.3/-0.8}$	$60_{-0.2/-0.6}$	41	27	20	89	117
125	25	$131_{-0.8}$	$70_{-0.2/-0.6}$	50	30	25	110	142

For ∅	Basic version				R3 – High corrosion protection			
[mm]	CRC[1)]	Weight [g]	Part No.	Type	CRC[1)]	Weight [g]	Part No.	Type
12	2	20	**537790**	**SNCL-12**	3	20	**537794**	**SNCL-12-R3**
16	2	21	**537791**	**SNCL-16**	3	21	**537795**	**SNCL-16-R3**
20	2	38	**537792**	**SNCL-20**	3	38	**537796**	**SNCL-20-R3**
25	2	41	**537793**	**SNCL-25**	3	41	**537797**	**SNCL-25-R3**
32	1	71	★ **174404**	**SNCL-32**	–	–	**–**	
40	1	95	★ **174405**	**SNCL-40**	–	–	**–**	
50	1	158	★ **174406**	**SNCL-50**	–	–	**–**	
63	1	225	★ **174407**	**SNCL-63**	–	–	**–**	
80	1	436	★ **174408**	**SNCL-80**	–	–	**–**	
100	1	606	**174409**	**SNCL-100**	–	–	**–**	
125	1	1135	**174410**	**SNCL-125**	–	–	**–**	

1) Corrosion resistance class CRC 1 to Festo standard FN 940070
Low corrosion stress. For dry indoor applications or transport and storage protection. Also applies to parts behind covers, in the non-visible interior area, and parts which are covered in the application (e.g. drive trunnions).
Corrosion resistance class CRC 2 to Festo standard FN 940070
Moderate corrosion stress. Indoor applications in which condensation may occur. External visible parts with primarily decorative requirements for the surface and which are in direct contact with the ambient atmosphere typical for industrial applications.
Corrosion resistance class CRC 3 to Festo standard FN 940070
High corrosion stress. Outdoor exposure under moderate corrosive conditions. External visible parts with primarily functional requirements for the surface and which are in direct contact with a normal industrial environment.

Festo core product range
★ Ready for dispatch from the Festo factory in 24 hours
☆ Ready for dispatch in 5 days maximum from stock

Swivel flange
SNCS/CRSNCS/SNCS-...-R3

Material:
SNCS 32 ... 50: Die-cast aluminium
SNCS 63 ... 125:
Wrought aluminium alloy
CRSNCS 32 ... 80:
High-alloy stainless steel
SNCS-...-R3: 100 ... 125: Wrought aluminium alloy with protective coating
RoHS-compliant

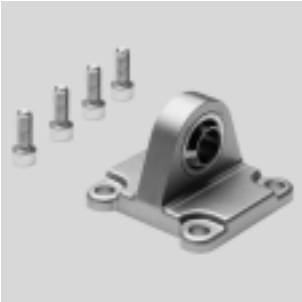

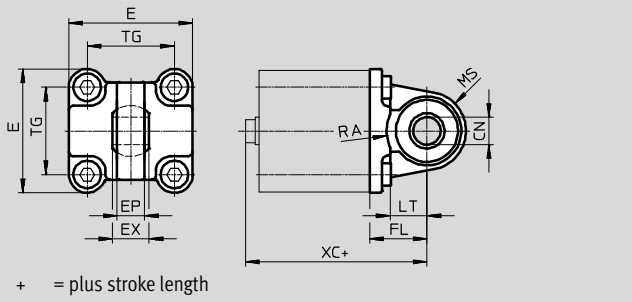

Dimensions and ordering data							
For ∅	CN ∅		E		EP	EX	FL
[mm]	ADN-...	ADN-...-R3	ADN-...	ADN-...-R3	±0.2		±0.2
32	$10^{+0.013}$	10+0.015/–0.04	45+0.2/–0.5	$45_{-0.5}$	10.5	14	22
40	$12^{+0.015}$	12+0.018/–0.04	$54_{-0.5}$	$54_{-0.5}$	12	16	25
50	$16^{+0.015}$	16+0.018/–0.04	$64_{-0.6}$	$64_{-0.6}$	15	21	27
63	$16^{+0.015}$	16+0.018/–0.04	74,5±0.5	$75_{-0.6}$	15	21	32
80	$20^{+0.018}$	20+0.021/–0.04	92,2±0.8	$93_{-0.8}$	18	25	36
100	$20^{+0.018}$	20+0.021/–0.04	109+1/–0.7	109+1/–0.7	18	25	41
125	$30^{+0.018}$	30+0.021/–0.04	132+1/–0.7	132+1/–0.7	25	37	50

For ∅	LT	MS		RA		TG	XC
		ADN-...	ADN-...-R3	ADN-...	ADN-...-R3		
[mm]				+1	+1		
32	13	$15^{+0.5}$	$15^{+0.5}$	14.5	14.5	32.5	72.2
40	16	$17^{+0.5}$	$17^{+0.5}$	17.5	17.5	38	75.2
50	16	$20^{+0.5}$	$20^{+0.5}$	18.5	19	46.5	80.2
63	21	$23_{-0.5}$	$22^{+0.5}$	23	23	56.5	89.2
80	22	$28_{-0.5}$	$27^{+0.5}$	25	25	72	99
100	27	30±0.5	30±0.5	95	100	89	117
125	30	39±0.5	39±0.5	100	100	110	142

For ∅	Basic version				High corrosion protection			
	CRC[1)]	Weight	Part No.	Type	CRC[1)]	Weight	Part No.	Type
[mm]		[g]				[g]		
32	1	86	★ **174397**	**SNCS-32**	4	161	**2895920**	**CRSNCS-32**
40	1	122	★ **174398**	**SNCS-40**	4	239	**2895921**	**CRSNCS-40**
50	1	216	★ **174399**	**SNCS-50**	4	403	**2895922**	**CRSNCS-50**
63	2	281	★ **174400**	**SNCS-63**	4	576	**2895923**	**CRSNCS-63**
80	2	557	★ **174401**	**SNCS-80**	4	1173	**2895924**	**CRSNCS-80**
100	2	683	**174402**	**SNCS-100**	3	684	**2895925**	**SNCS-100-R3**
125	2	1369	**174403**	**SNCS-125**	3	1369	**2895926**	**SNCS-125-R3**

1) Corrosion resistance class CRC 1 to Festo standard FN 940070
Low corrosion stress. For dry indoor applications or transport and storage protection. Also applies to parts behind covers, in the non-visible interior area, and parts which are covered in the application (e.g. drive trunnions).
Corrosion resistance class CRC 2 to Festo standard FN 940070
Moderate corrosion stress. Indoor applications in which condensation may occur. External visible parts with primarily decorative requirements for the surface and which are in direct contact with the ambient atmosphere typical for industrial applications.
Corrosion resistance class CRC 3 to Festo standard FN 940070
High corrosion stress. Outdoor exposure under moderate corrosive conditions. External visible parts with primarily functional requirements for the surface and which are in direct contact with a normal industrial environment.
Corrosion resistance class CRC 4 to Festo standard FN 940070
Particularly high corrosion stress. Outdoor exposure under extreme corrosive conditions. Parts exposed to aggressive media, for instance in the chemical or food industries. These applications may need to be supported by special tests (➔ also FN 940082) using appropriate media.

Festo core product range	★ Ready for dispatch from the Festo factory in 24 hours ☆ Ready for dispatch in 5 days maximum from stock

Clevis foot LBG/LBG-R3
The clevis foot is secured against rotation with a dowel pin.

Material:
LBG 32 … 63: Special steel casting
LBG 80 … 125: Nodular graphite cast iron
LBG-…-R3: High-alloy stainless steel
Free of copper and PTFE
RoHS-compliant

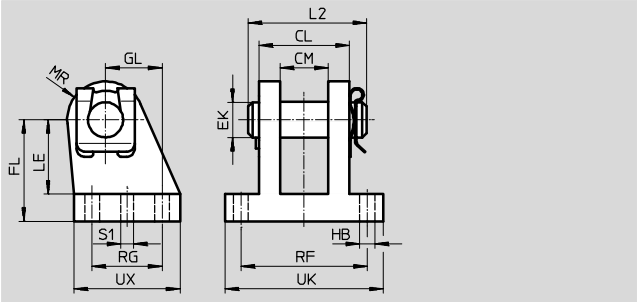

Dimensions and ordering data														
For ∅ [mm]	CL ±0.2	CM	EK ∅	FL	GL	HB ∅	L2	LE	MR	RF	RG	S1 ∅	UK	UX
32	28	14.1	10	32	16	6.8	35	24	12	42	20	4.8	56	36
40	30	16.1	12	36	20	6.8	39	26	14	44	26	5.8	58	41.5
50	40	21.1	16	45	25	9.2	50	33	15	56	31	5.8	70	47
63	40	21.1	16	50	25	9	50	38	17	56	31	7.8	70	49
80	50	25.1	20	63	30	11	60	49	18	70	36	7.8	89	55
100	50	25.1	20	71	41	11	60	56	22	70	46	9.8	89	65
125	80	37.2	30	90	60	14	89	70	26	106	70	11.8	128	96

For∅ [mm]	Basic version CRC[1)]	Weight [g]	Part No.	Type	R3 – High corrosion protection CRC[1)]	Weight [g]	Part No.	Type
32	2	220	**31761**	**LBG-32**	3	220	**2078790**	**LBG-32-R3**
40	2	300	**31762**	**LBG-40**	3	300	**2078792**	**LBG-40-R3**
50	2	540	**31763**	**LBG-50**	3	540	**2078794**	**LBG-50-R3**
63	2	580	**31764**	**LBG-63**	3	580	**2078795**	**LBG-63-R3**
80	2	1050	**31765**	**LBG-80**	3	1050	**2078797**	**LBG-80-R3**
100	2	1375	**31766**	**LBG-100**	3	1375	**2078799**	**LBG-100-R3**
125	2	4140	**31767**	**LBG-125**	3	4140	**2078837**	**LBG-125-R3**

1) Corrosion resistance class CRC 2 to Festo standard FN 940070
Moderate corrosion stress. Indoor applications in which condensation may occur. External visible parts with primarily decorative requirements for the surface and which are in direct contact with the ambient atmosphere typical for industrial applications.
Corrosion resistance class CRC 3 to Festo standard FN 940070
High corrosion stress. Outdoor exposure under moderate corrosive conditions. External visible parts with primarily functional requirements for the surface and which are in direct contact with a normal industrial environment.

Multi-position kit DPNA

Material:
Flange: Wrought aluminium alloy
Screws: Galvanised steel
Free of copper and PTFE
RoHS-compliant

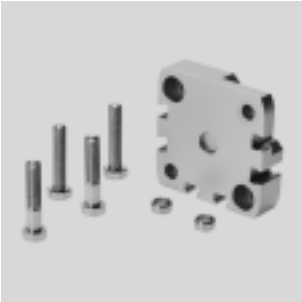

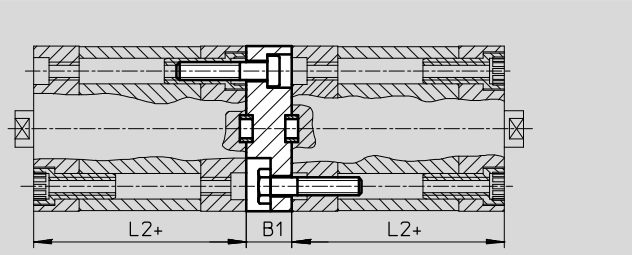

+ = plus stroke length

Dimensions and ordering data

For ∅ [mm]	L2	B1	Max. overall stroke length [mm]	CRC[1)]	Weight [g]	Part No.	Type
12	35	13	600	2	28	**537263**	**DPNA-12**
16					33	**537264**	**DPNA-16**
20	37				50	**537265**	**DPNA-20**
25	39				60	**537266**	**DPNA-25**
32	44	15	800		99	**537267**	**DPNA-32**
40	45				129	**537268**	**DPNA-40**
50					196	**537269**	**DPNA-50**
63	49				249	**537270**	**DPNA-63**
80	54	17	1000		474	**537271**	**DPNA-80**
100	67	19.5			712	**537272**	**DPNA-100**

1) Corrosion resistance class CRC 2 to Festo standard FN 940070
Moderate corrosion stress. Indoor applications in which condensation may occur. External visible parts with primarily decorative requirements for the surface and which are in direct contact with the ambient atmosphere typical for industrial applications.

- Note

The maximum overall stroke length may not be exceeded when combining cylinders and multi-position kits.

Clevis foot LBN

Material:
Galvanised steel
Free of copper and PTFE
RoHS-compliant

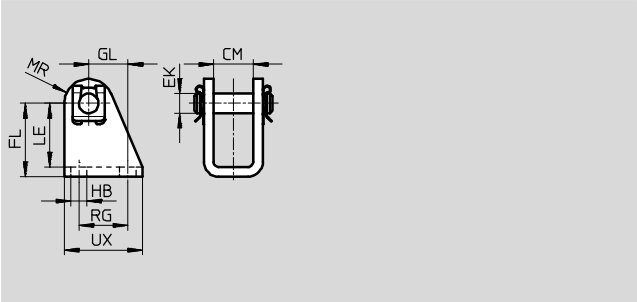

Dimensions and ordering data													
For ∅ [mm]	CM	EK ∅	FL	GL	HB ∅	LE	MR	RG	UX	CRC[1]	Weight [g]	Part No.	Type
12/16	12.1	6	27 +0.3/−0.2	13	5.5	24	7	15	25	1	40	★ **6058**	**LBN-12/16**
20/25	16.1	8	30 +0.4/−0.2	16	6.6	26	10	20	32	1	84	★ **6059**	**LBN-20/25**

1) Corrosion resistance class CRC 1 to Festo standard FN 940070
Low corrosion stress. For dry indoor applications or transport and storage protection. Also applies to parts behind covers, in the non-visible interior area, and parts which are covered in the application (e.g. drive trunnions).

Clevis foot CRLBN, stainless steel

Material:
High-alloy steel
Free of copper and PTFE
RoHS-compliant

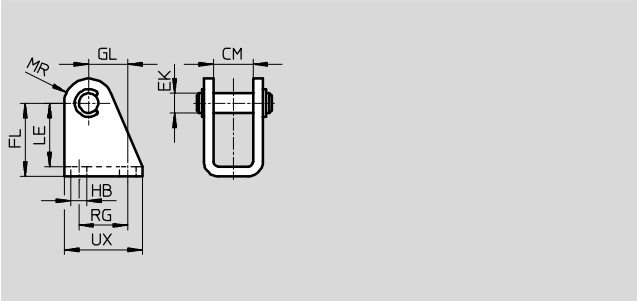

Dimensions and ordering data													
For ∅ [mm]	CM	EK ∅	FL	GL	HB	LE	MR	RG	UX	CRC[1]	Weight [g]	Part No.	Type
12/16	12.1	6	27 +0.3/−0.2	13	5.5	24	7	15	25	4	39	**161862**	**CRLBN-12/16**
20/25	16.1	8	30 +0.4/−0.2	16	6.6	26	10	20	32	4	82	**161863**	**CRLBN-20/25**

1) Corrosion resistance class CRC 4 to Festo standard FN 940070
Particularly high corrosion stress. Outdoor exposure under extreme corrosive conditions. Parts exposed to aggressive media, for instance in the chemical or food industries. These applications may need to be supported by special tests (➔ also FN 940082) using appropriate media.

Festo core product range	★ Ready for dispatch from the Festo factory in 24 hours ☆ Ready for dispatch in 5 days maximum from stock

Swivel flange
SNCB/SNCB-…-R3

Material:
SNCB: Die-cast aluminium
SNCB-…-R3: Die-cast aluminium with protective coating
Free of copper and PTFE
RoHS-compliant

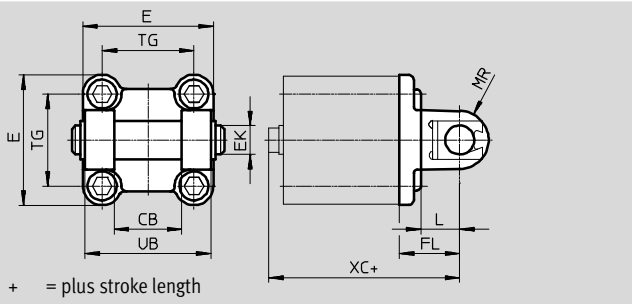

Dimensions and ordering data									
For ∅ [mm]	CB H14	E	EK ∅ H9/e8	FL ±0.2	L	MR –0.5	TG	UB h14	XC
32	26	45+0.2/–0.5	10	22	13	8.5	32.5	45	72
40	28	54–0.5	12	25	16	12	38	52	76
50	32	64–0.6	12	27	16	12	46.5	60	80
63	40	75–0.6	16	32	21	16	56.5	70	89
80	50	93–0.8	16	36	22	16	72	90	99
100	60	110+0.3/–0.8	20	41	27	20	89	110	117
125	70	131–0.8	25	50	30	25	110	130	142

For ∅ [mm]	Basic version				R3 – High corrosion protection			
	CRC[1)]	Weight [g]	Part No.	Type	CRC[1)]	Weight [g]	Part No.	Type
32	1	103	★ **174390**	**SNCB-32**	3	100	**176944**	**SNCB-32-R3**
40	1	155	★ **174391**	**SNCB-40**	3	151	**176945**	**SNCB-40-R3**
50	1	232	★ **174392**	**SNCB-50**	3	228	**176946**	**SNCB-50-R3**
63	1	375	★ **174393**	**SNCB-63**	3	371	**176947**	**SNCB-63-R3**
80	1	636	★ **174394**	**SNCB-80**	3	632	**176948**	**SNCB-80-R3**
100	1	1035	**174395**	**SNCB-100**	3	986	**176949**	**SNCB-100-R3**
125	1	1860	**174396**	**SNCB-125**	3	1776	**176950**	**SNCB-125-R3**

1) Corrosion resistance class CRC 1 to Festo standard FN 940070
Low corrosion stress. For dry indoor applications or transport and storage protection. Also applies to parts behind covers, in the non-visible interior area, and parts which are covered in the application (e.g. drive trunnions).
Corrosion resistance class CRC 3 to Festo standard FN 940070
High corrosion stress. Outdoor exposure under moderate corrosive conditions. External visible parts with primarily functional requirements for the surface and which are in direct contact with a normal industrial environment.

Festo core product range	★ Ready for dispatch from the Festo factory in 24 hours ☆ Ready for dispatch in 5 days maximum from stock

Trunnion flange ZNCF/CRZNG

Material:
ZNCF: Special steel casting
CRZNG: Electrolytically polished special steel casting
Free of copper and PTFE
RoHS-compliant

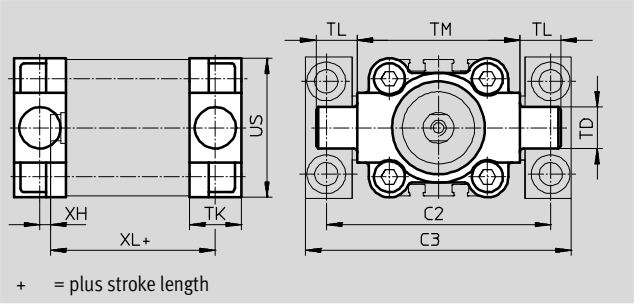

Dimensions and ordering data									
For ∅ [mm]	C2	C3	TD ∅ e9	TK	TL	TM	US	XH	XL
32	71	86	12	16	12	50	45	2	58
40	87	105	16	20	16	63	54	4	61.1
50	99	117	16	24	16	75	64	4	64.7
63	116	136	20	24	20	90	75	4	68.5
80	136	156	20	28	20	110	93	5	76.9
100	164	189	25	38	25	132	110	10	95
125	192	217	25	50	25	160	131	14	117

For ∅	Basic version				R3 – High corrosion protection			
[mm]	CRC[1)]	Weight [g]	Part No.	Type	CRC[1)]	Weight [g]	Part No.	Type
32	2	150	**174411**	**ZNCF-32**	4	150	**161852**	**CRZNG-32**
40	2	285	**174412**	**ZNCF-40**	4	285	**161853**	**CRZNG-40**
50	2	473	**174413**	**ZNCF-50**	4	473	**161854**	**CRZNG-50**
63	2	687	**174414**	**ZNCF-63**	4	687	**161855**	**CRZNG-63**
80	2	1296	**174415**	**ZNCF-80**	4	1296	**161856**	**CRZNG-80**
100	2	2254	**174416**	**ZNCF-100**	4	2254	**161857**	**CRZNG-100**
125	2	3484	**174417**	**ZNCF-125**	4	3484	**185362**	**CRZNG-125**

1) Corrosion resistance class CRC 2 to Festo standard FN 940070
Moderate corrosion stress. Indoor applications in which condensation may occur. External visible parts with primarily decorative requirements for the surface and which are in direct contact with the ambient atmosphere typical for industrial applications.
Corrosion resistance class CRC 4 to Festo standard FN 940070
Particularly high corrosion stress. Outdoor exposure under extreme corrosive conditions. Parts exposed to aggressive media, for instance in the chemical or food industries. These applications may need to be supported by special tests (➔ also FN 940082) using appropriate media.

Trunnion support LNZG

Material:
Trunnion support: Anodised aluminium
Plain bearing: Plastic
Free of copper and PTFE
RoHS-compliant

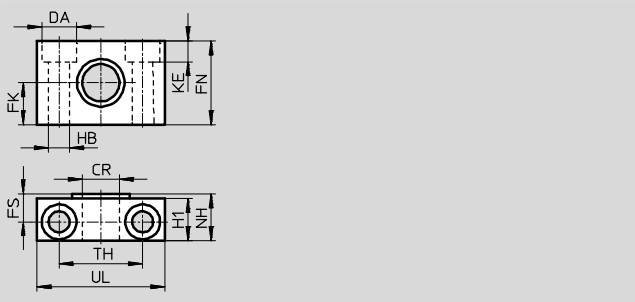

Dimensions and ordering data

For ∅ [mm]	CR ∅ D11	DA ∅ H13	FK ∅ ±0.1	FN	FS	H1	HB ∅ H13	KE	NH	TH ±0.2	UL	CRC[1]	Weight [g]	Part No.	Type
32	12	11	15	30	10.5	15	6.6	6.8	18	32	46	2	83	**32959**	**LNZG-32**
40, 50	16	15	18	36	12	18	9	9	21	36	55	2	129	**32960**	**LNZG-40/50**
63, 80	20	18	20	40	13	20	11	11	23	42	65	2	178	**32961**	**LNZG-63/80**
100, 125	25	20	25	50	16	24.5	14	13	28.5	50	75	2	306	**32962**	**LNZG-100/125**

1) Corrosion resistance class CRC 2 to Festo standard FN 940070
Moderate corrosion stress. Indoor applications in which condensation may occur. External visible parts with primarily decorative requirements for the surface and which are in direct contact with the ambient atmosphere typical for industrial applications.

Ordering data – Piston rod attachments

Technical data ➔ Internet: piston-rod attachment

Designation	For ∅	Part No.	Type
Rod eye SGS			
	12	–	
	16	★ **9254**	**SGS-M6**
	20, 25	★ **9255**	**SGS-M8**
	32, 40	★ **9261**	**SGS-M10x1,25**
	50, 63	★ **9262**	**SGS-M12x1,25**
	80, 100	★ **9263**	**SGS-M16x1,5**
	125	★ **9264**	**SGS-M20x1,5**
Rod clevis SG			
	12	–	
	16	★ **3110**	**SG-M6**
	20, 25	★ **3111**	**SG-M8**
	32, 40	★ **6144**	**SG-M10x1,25**
	50, 63	★ **6145**	**SG-M12x1,25**
	80, 100	★ **6146**	**SG-M16x1,5**
	125	★ **6147**	**SG-M20x1,5**
Coupling piece KSG			
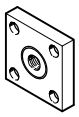	12, 16, 20, 25	–	
	32, 40	**32963**	**KSG-M10x1,25**
	50, 63	**32964**	**KSG-M12x1,25**
	80, 100	**32965**	**KSG-M16x1,5**
	125	**32966**	**KSG-M20x1,5**
Adapter AD			
	12	–	
	16	**157328**	**AD-M6-M5**
		157329	**AD-M6-1/8**
		157330	**AD-M6-1/4**
	20	**157331**	**AD-M8-1/8**
	25	**157332**	**AD-M8-1/4**
	32	**157333**	**AD-M10x1,25-1/8**
	40	**157334**	**AD-M10x1,25-1/4**
	50	**160256**	**AD-M12x1,25-1/4**
	63	**160257**	**AD-M12x1,25-3/8**

Designation	For ∅	Part No.	Type
Rod clevis SGA used in combination with rod eye SGS			
	12, 16, 20, 25	–	
	32, 40	**32954**	**SGA-M10x1,25**
	50, 63	**10767**	**SGA-M12x1,25**
	80, 100	**10768**	**SGA-M16x1,25**
	125	**10769**	**SGA-M20x1,25**
Self-aligning rod coupler FK			
	12	**30984**	**FK-M5**
	16	★ **2061**	**FK-M6**
	20, 25	★ **2062**	**FK-M8**
	32, 40	★ **6140**	**FK-M10x1,25**
	50, 63	★ **6141**	**FK-M12x1,25**
	80, 100	★ **6142**	**FK-M16x1,5**
	125	★ **6143**	**FK-M20x1,5**
Coupling piece KSZ			
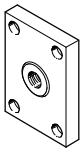	12	–	
	16	**36123**	**KSZ-M6**
	20, 25	**36124**	**KSZ-M8**
	32, 40	**36125**	**KSZ-M10x1,25**
	50, 63	**36126**	**KSZ-M12x1,25**
	80, 100	**36127**	**KSZ-M16x1,5**
	125	**36128**	**KSZ-M20x1,5**

Festo core product range

★ Ready for dispatch from the Festo factory in 24 hours

☆ Ready for dispatch in 5 days maximum from stock

Ordering data – Corrosion and acid resistant piston rod attachments — Technical data ➔ Internet: crsg

Designation	For ∅	Part No.	Type
Rod eye CRSGS			
	12	–	
	16	**195580**	**CRSGS-M6**
	20, 25	**195581**	**CRSGS-M8**
	32, 40	**195582**	**CRSGS-M10x1,25**
	50, 63	**195583**	**CRSGS-M12x1,25**
	80, 100	**195584**	**CRSGS-M16x1,5**
	125	**195585**	**CRSGS-M20x1,5**
Self-aligning rod coupler CRFK			
	32, 40	**2305778**	**CRFK-M10x1,25**
	50, 63	**2305779**	**CRFK-M12x1,25**
	80, 100	**2490673**	**CRFK-M16x1,5**
	125	**2545677**	**CRFK-M20x1,5**

Designation	For ∅	Part No.	Type
Rod clevis CRSG			
	12	–	
	16, 20	**13567**	**CRSG-M6**
	20, 25	**13568**	**CRSG-M8**
	32, 40	**13569**	**CRSG-M10x1,25**
	50, 63	**13570**	**CRSG-M12x1,25**
	80, 100	**13571**	**CRSG-M16x1,5**
	125	**13572**	**CRSG-M20x1,5**

Ordering data – Mounting attachments — Technical data ➔ Internet: clevis foot

Designation	For ∅	Part No.	Type
Clevis foot LBG for rod eye SGS			
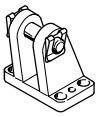	32, 40	**31761**	**LBG-32**
	50, 63	**31762**	**LBG-40**
	80, 100	**31763**	**LBG-50**
		31764	**LBG-63**
	125	**31765**	**LBG-80**
		31766	**LBG-100**

Designation	For ∅	Part No.	Type
Right-angle clevis foot LQG for rod eye SGS			
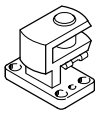	32, 40	**31768**	**LQG-32**
	50, 63	**31769**	**LQG-40**
	80, 100	**31770**	**LQG-50**
		31771	**LQG-63**
	125	**31772**	**LQG-80**
		31773	**LQG-100**

Ordering data – Mounting attachments, R3 – High corrosion protection — Technical data ➔ Internet: lagerbock

Designation	For ∅	Part No.	Type
Clevis foot LBG-R3 for rod eye CRSGS			
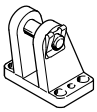	32, 40	**2078790**	**LBG-32-R3**
	50, 63	**2078792**	**LBG-40-R3**
	80, 100	**2078794**	**LBG-50-R3**
		2078795	**LBG-63-R3**
	125	**2078797**	**LBG-80-R3**
		2078799	**LBG-100-R3**

Ordering data – One-way flow control valves — Technical data ➔ Internet: grla

	Connection		Material	Part No.	Type
	For ∅	For tubing O.D.			
For exhaust air					
	12, 16, 20, 25	3	Metal design	★ **193137**	**GRLA-M5-QS-3-D**
		4		★ **193138**	**GRLA-M5-QS-4-D**
		6		★ **193139**	**GRLA-M5-QS-6-D**
	32, 40, 50, 63, 80, 100	3		★ **193142**	**GRLA-1/8-QS-3-D**
		4		★ **193143**	**GRLA-1/8-QS-4-D**
		6		★ **193144**	**GRLA-1/8-QS-6-D**
		8		★ **193145**	**GRLA-1/8-QS-8-D**
	125	6		★ **193146**	**GRLA-1/4-QS-6-D**
		8		★ **193147**	**GRLA-1/4-QS-8-D**
		10		★ **193148**	**GRLA-1/4-QS-10-D**

Festo core product range	★ Ready for dispatch from the Festo factory in 24 hours ☆ Ready for dispatch in 5 days maximum from stock

Ordering data – One-way flow control valves Technical data ➔ Internet: grlz

	Connection		Material	Part No.	Type
	For ∅	For tubing O.D.			
For supply air					
	12, 16, 20, 25	3	Metal design	★ 193153	GRLZ-M5-QS-3-D
		4		★ 193154	GRLZ-M5-QS-4-D
		6		★ 193155	GRLZ-M5-QS-6-D
	32, 40, 50, 63, 80, 100	3		★ 193156	GRLZ-1/8-QS-3-D
		4		★ 193157	GRLZ-1/8-QS-4-D
		6		★ 193158	GRLZ-1/8-QS-6-D
		8		★ 193159	GRLZ-1/8-QS-8-D
	125	–		151195	GRLZ-1/4-B

Ordering data – Proximity sensors for T-slot, magneto-resistive Technical data ➔ Internet: smt

	Type of mounting	Switch output	Electrical connection	Cable length [m]	Part No.	Type
N/O contact						
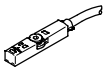	Insertable in the slot from above, flush with cylinder profile, short design	PNP	Cable, 3-wire	2.5	★ 574335	SMT-8M-A-PS-24V-E-2,5-OE
			Plug M8x1, 3-pin	0.3	★ 574334	SMT-8M-A-PS-24V-E-0,3-M8D
			Plug M12x1, 3-pin	0.3	★ 574337	SMT-8M-A-PS-24V-E-0,3-M12
		NPN	Cable, 3-wire	2.5	★ 574338	SMT-8M-A-NS-24V-E-2,5-OE
			Plug M8x1, 3-pin	0.3	★ 574339	SMT-8M-A-NS-24V-E-0,3-M8D
N/C contact						
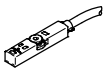	Insertable in the slot from above, flush with cylinder profile, short design	PNP	Cable, 3-wire	7.5	★ 574340	SMT-8M-A-PO-24V-E-7,5-OE

Festo core product range ★ Ready for dispatch from the Festo factory in 24 hours
☆ Ready for dispatch in 5 days maximum from stock

Ordering data – Proximity sensors for T-slot, magnetic reed — Technical data ➔ Internet: sme

	Type of mounting	Switch output	Electrical connection	Cable length [m]	Part No.	Type
N/O contact						
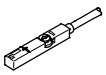	Insertable in the slot from above, flush with cylinder profile	Contacting	Cable, 3-wire	2.5	★ **543862**	**SME-8M-DS-24V-K-2,5-OE**
				5.0	★ **543863**	**SME-8M-DS-24V-K-5,0-OE**
			Cable, 2-wire	2.5	★ **543872**	**SME-8M-ZS-24V-K-2,5-OE**
			Plug M8x1, 3-pin	0.3	★ **543861**	**SME-8M-DS-24V-K-0,3-M8D**
	Insertable in the slot lengthwise, flush with the cylinder profile	Contacting	Cable, 3-wire	2.5	**150855**	**SME-8-K-LED-24**
			Plug M8x1, 3-pin	0.3	**150857**	**SME-8-S-LED-24**
N/C contact						
	Insertable in the slot lengthwise, flush with the cylinder profile	Contacting	Cable, 3-wire	7.5	**160251**	**SME-8-O-K-LED-24**

Ordering data – Connecting cables — Technical data ➔ Internet: nebu

	Electrical connection, left	Electrical connection, right	Cable length [m]	Part No.	Type
	Straight socket, M8x1, 3-pin	Cable, open end, 3-wire	2.5	★ **541333**	**NEBU-M8G3-K-2.5-LE3**
			5	★ **541334**	**NEBU-M8G3-K-5-LE3**
	Straight socket, M12x1, 5-pin	Cable, open end, 3-wire	2.5	★ **541363**	**NEBU-M12G5-K-2.5-LE3**
			5	★ **541364**	**NEBU-M12G5-K-5-LE3**
	Angled socket, M8x1, 3-pin	Cable, open end, 3-wire	2.5	★ **541338**	**NEBU-M8W3-K-2.5-LE3**
			5	★ **541341**	**NEBU-M8W3-K-5-LE3**
	Angled socket, M12x1, 5-pin	Cable, open end, 3-wire	2.5	**541367**	**NEBU-M12W5-K-2.5-LE3**
			5	**541370**	**NEBU-M12W5-K-5-LE3**

Ordering data – Rectangular proximity sensors, pneumatic — Technical data ➔ Internet: smpo

	Pneumatic connection	Part No.	Type
3/2-way valve, normally closed			
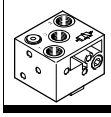	Female thread M5	**178563**	**SMPO-8E**

Ordering data – Mounting kits for proximity sensors SMPO-8E — Technical data ➔ Internet: smb

	Assembly	Part No.	Type
	Clamped in T-slot	**178230**	**SMB-8E**

Ordering data – Slot cover for T-slot

	Assembly	Length	Part No.	Type
	Insertable from above	2x 0.5 m	**151680**	**ABP-5-S**

Festo core product range	★ Ready for dispatch from the Festo factory in 24 hours ☆ Ready for dispatch in 5 days maximum from stock