Motors

saia

JOHNSON ELECTRIC

innovating motion

sales@prom-elec.com / ООО ПРОМЭЛЕКТРОНИКА

The data used in this Product Overview may be used as a guideline only. Specific operational characteristics of our products may vary according to individual applications. It is strongly recommended that specific operating conditions are clarified with Johnson Electric before application.

Johnson Electric Terms and Conditions of Sale apply.

All data may be subject to change without notice.

Table of Contents

Johnson Electric Group		2
Group		
Looking for a specialized motor solution		4
Table of typical applications & Saia motor types		9
Saia Motors important notes		10
Synchronous Motors		28
Rotational	URT, UAT1, UAT3, UCM, UCR, UBR1, UBR2, UDR	29
	UDS, UO (SM5021/SM5022), UFM, UFR, UHM, UP (SM6443/SM6444)	48
Rotational, Torque limited	UNU0 (SM3532RG), UOU0 (SM5032RG), UPU0 (SM6469RG)	69
Stepper Motors		78
Rotational	URG, UAG1, UAG3/4, UCD, UCB, UBD, UBB	79
	UDB, UO (ST5021/ST5022), UFB, UFD, UHD, UP (ST6443/ST6444)	102
Gearboxes		123
	UGA, UGD, UGM, UGB, UGF, UGV	124
	UGO/UGP (STG60/STG61), AP60, UGJ, UGR (STG200)	141
Synchronous Motors		152
Linear	UCC, UCK, UBK, UO Linear actuator (LA5021SM)	153
	UO Spindle actuator (SP5021SM)	163
Stepper Motors		167
Linear	UCE, UCL, UBL, UO Linear actuator (LA5021ST)	168
	UO Spindle actuator (SP5022ST), Connector Types	178
Electronics for Stepper Motors		181
Driver Boards	SAMOTRONIC101, SAMOTRONIC102, Evaluation-Kit 2	182
Cam Programmers		185
	KKP, KKC, KKD0, KKD4, KKD1, KKD7, KKD2, KKD3, KKD6	186
Hand settable timer		207
	KKH	208
Cam Programmers	Accessories	214

The Johnson Electric Group is one of the world's largest providers of motion actuators for automotive and industrial applications

Over the years, we have shipped billions of motors to more than thirty countries in over one hundred different motor applications. Johnson Electric has an annual production capacity of one billion motors.

At the heart of Johnson Electric's success is our commitment to make our customers successful. Our customers include many of the world's leading industrial, consumer and automotive companies. We begin by understanding our customers' business needs, and the product application requirements of the end user of our customers' products. Then we design and deliver innovative motion solutions that help our customers to differentiate their products in the marketplace. Our goal is to be instrumental in the successful launch of our customers' products in their respective marketplaces.

Our Brand Promise

Johnson Electric is the most reliable partner

Johnson Electric is responsive and flexible; and has the financial stability and organizational integrity to meet all of our commitments and to support our customers' success. Product reliability and assurance of supply are our commitment.

Johnson Electric delivers competitive advantage

Johnson Electric delivers differentiation and innovation through its motion products – subsystems comprising of Stepper Motors, DC Motors, AC Motors, Piezo-electric Motors, Switches, Solenoids, Flexi Circuits, Motion Control, Precision Plastics and Precision Gears.

Our business growth hinges with leading "branded" goods producers to deliver differentiation and innovation through our motion products. The core platform for delivering these solutions is a highly developed production base and focused customer support teams throughout the world. This combines scale advantages in production and procurement with skilled and dedicated motion application experts.

Johnson Electric Holdings Limited is the parent company of the Johnson Electric Group and has been listed on the Stock Exchange of Hong Kong since 1984. The Group structure consists of a number of operating divisions and business units focused on their particular customer application or product segment

Johnson Electric Group
Wholly owned by Johnson Electric Holdings Limited (stock code: 179)

Automotive Products Group

Industry Products Group

Components & Services

Other Group Businesses

- Parlex Corporation
- Johnson Electric Trading
- Saia-Burgess Controls
- V-Motor
- Nanomotion
- Johnson Electric Capital
- China Autoparts, Inc

The Group's motion systems, motors and switches businesses are managed through two primary operating divisions: Automotive Products Group and Industry Products Group.

The Automotive Products Group, which consists of Johnson Electric's Automotive Motors Group and the Automotive Division of Saia-Burgess Electronics, is focused on providing customized motion solutions for major automotive application segments that include powertrain, body and chassis.

The Industry Products Group is comprised of business units that provide motion products and solutions for various commercial and industrial application sectors, including home appliances, power tools, business equipment, personal care products, medical equipment and healthcare, building automation and security, audio-visual and other industrial products.

Supporting these two operating divisions is the Group's Components & Services function which produces metal and plastic parts, tooling and production equipment for motor and motion related products. Johnson Electric is a highly vertically integrated business that manufactures an exceptionally wide range of components that form the basis for its final assembled end products. We make magnets, bearings, shafts, housings, laminations, commutators and die cast parts. We also build tools, assembly fixtures, plastic molds as well as armature winding and other production machines.

In addition to motion systems and motors, the Group also consists of a number of complementary manufacturing businesses and other subsidiary companies. These include an innovative provider of flexible printed circuits and interconnect solutions; a successful niche player in the programmable controls industry; and a rapidly growing specialty metals and trading services company.

Looking for a specialized motor solution?

Look no further.

We offer the industry's most comprehensive combination of technology, engineering and manufacturing to satisfy all your actuation design needs. From stand-alone motor products to complete value-added solutions; we can do it all for you. The images shown are just a few samples that demonstrate our design and value-added assembly capabilities.

If your application requires more than a standard product solution, please consider us early in your design process. Our application engineering staff will be happy to discuss your requirements.

Saia – a leading global motor brand

We offer the best design resources for actuating solutions – whether it's one motor delivered tomorrow morning or a half million delivered just-in-time over the next year.

Machine and process automation can range the most basic on-off function to extremely complex sequencing. When the process involves linear or rotary motion, motors are among the best actuation devices in terms of size, cost, simplified installation, and ease of use.

On this page are some of the primary functions which are ideally suited for Saia motors, followed by several pages of current application examples of our products applied in a wide variety of industries. If your design includes linear or rotary operations, we can help you determine the best product to meet your application design requirements.

Variable Positioning

Stepper motor for linear applications and rotary applications provide variable positioning capabilities.

Uncompromising Reliability

Saia motors provide repeatable, predictable performance.

Common Rotary Motor Applications

- Counters
- Circuit breakers
- Rotary valves
- Rotating lamps
- Textile machinery
- Flaps
- Level indicators
- Ticket machines
- Copiers

Common Linear Motor Applications

- Coffee machines
- Textile machinery
- Linear valves
- Vending machines

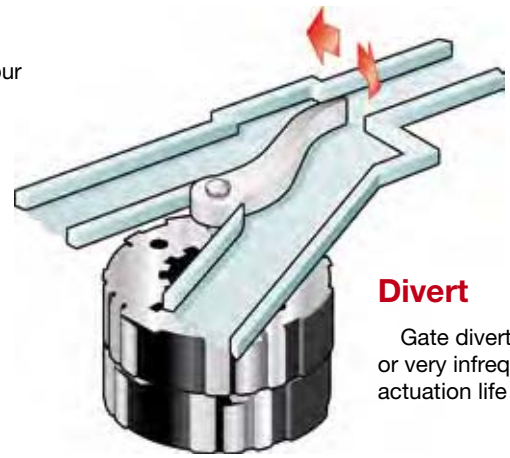

Divert

Gate diverters, depending on the application, can be used continuously or very infrequently. In this example, a stepper motor unit is chosen for its actuation life rating.

Pinch

In this example, a linear motor is utilized for its variable positioning capability to smoothly pinch the tube to the operator's precise demand. .

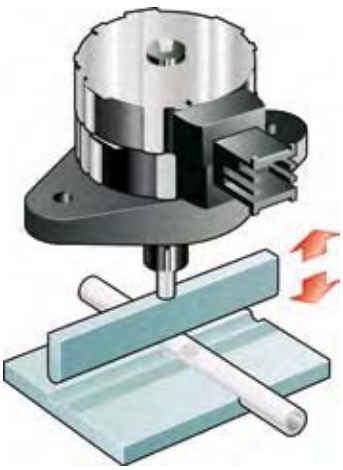

Position

Positioning applications can range from a simple ratcheting device, suchas this, to precise variable positioning using linear or rotary motor.

Motors for Pharmaceutical and Medical Equipment

Saia motors are ideally designed for precise, clean, quiet, reliable automation of a variety of medical equipment functions.

Inherent features which optimize linear and rotary motor use in the medical industry include:

- Easy control with simple electronics
- Instant actuation or smooth variable positioning
- High MTBF, reliable, repeatable operation without degradation due to wear
- Long, predictable life (10^6 cycles)
- Ideal for both open loop or closed loop microprocessor controlled systems

Pharmaceutical Dispenser

- Locks storage trays closed
- Locks individual medicine compartments
- Counts tablets as dispensed

IV Fluid Metering

- Acting as pinch valves, motor offer a simple, direct, reliable means to start and stop fluid flow through valves or tubing
- Principle motor design advantages include non-contacting, quiet operation with minimal heat generation
- Also, depending on the design requirements of the application, either immediate on/off or slow, proportional actuation can be achieved

Intraocular Microsurgery

- Motors are used to control fluid flow through a series of tubes during intraocular surgery
- Reliability is a primary motor advantage because a malfunction during surgery could be detrimental

Surgical Laser

- Motors are commonly used as the shutter mechanism for surgical lasers.

Portable, Real-Time Blood Analyzer

- A bedside blood analyzer allows blood to be monitored during administration of medicines allowing doctors to prescribe medications in more exacting dosages based on the patient's condition

Motors as Locking Mechanism

Motors are found in numerous applications that require a locking device. Whether it is a medical application, an office automation application or a door lock, motors provide an effective, cost-efficient locking mechanism.

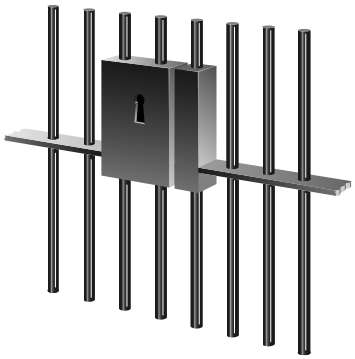

Security Applications

- Hotel room door lock
- Hotel safe lock
- Prison door lock
- Fire safety door opening lock

Office Automation

- Disk drive door lock
- Personal computer chassis lock
- Docking station lock
- Locks to hold peripherals in place
- Tape library index lock

Medical

- Sterilizer lock
- Centrifuge lock
- Blood analysis machine lock

Consumer

- Oven door lock for self-cleaning function
- Garage door safety lock
- Home safe lock

Industrial

- Overhead door lock
- Fire safety door lock
- Prison locks
- Commercial laundry locks

Motors in the Appliance Industry

Motors are found in numerous applications in the appliance industry. AC and DC products are available for on/off operation on many types of consumer and commercial appliances.

Domestic Appliances

- Through the door refrigerator ice and water dispensers
- Door locks on self-cleaning ovens
- Gas valve control on gas ranges and ovens
- Drain control valves on domestic washing machines
- Brake motors on domestic washing machines

Commercial Appliances

- Dispensing valves
- Beverage dispensing valves
- Product dispensers on vending machines
- Coin changers on vending machines
- Actuating devices on commercial baking and food processing or packaging equipment
- Wrapping material cutters for food packaging
- Gas valve control on gas fired boilers and furnaces
- Industrial overhead door brake mechanisms

Typical applications for cam programmers and manual timers

Automation in the **food industry**
Installation cleaning and systematic sterilization processes
Aids to automation for traditional bakeries, confectioners, regional speciality food producers, cheese makers, wineries, etc.

Automation in **industrial manufacturing**
Construction of machines and apparatus
Automated manufacturing equipment
Electroplating
Packaging
Trial installations, test benches

Automation in **domestic appliances**
Refrigeration technology, refrigerator defrosting, ice-cube making machines
Air conditioning installations
Regulation of heating technology, cascade switching of electric loads
Industrial and hospital washing machines
Swimming pool driving unit

Automation in **service industries**
Water supply, drinking water treatment, waste water purification
Bell-tower chimes, alarm sirens.

Miscellaneous automation
Office machines
Fitness equipment
Apparatus for leisure activities, oven for enamelware or pottery
Advertising devices
Impulse generator

Table of typical applications & Saia Motor Series

In addition to the products shown in the Product Catalog pages, the Product Mapping table below shows a wide range of motor types for a selection of applications. Also, motors may be customized to fulfill your specific requirements, please feel free to contact us.

Application & Motor types	URT	UAT1/UAT3	UCM/UCR	UBR1/UBR2	UDR	UDS	UO	UFM/UFR	UHM	UP	UNU0	UOU0	UPU0	URG	UAG1/2	UAG3/4	UCD/UCB	UBD/UBB	UDB	UO	UFD/UFB	UHD	UP	UGA/UGD	UGM	UGB/UGF	UGO/UGP	UGJ	UGR	UCC/UCK	UBK	UO Linear actuator	UCE/UCL	UBL
HVAC/Diverter valves		●	●	●		●									●	●	●	●												●	●		●	●
HVAC/Thermostatic valves		●					●	●																										
Coffee machines		●													●	●	●													●			●	
HVAC / Air Flaps		●	●																											●	●		●	●
Vending/Gaming		●	●	●	●	●	●	●							●	●		●		●	●	●								●	●		●	●
Industrial Equipment		●	●	●	●	●		●		●		●			●	●	●	●	●	●	●		●	●		●	●		●	●	●	●	●	●
ATM															●																			
Medical	●			●	●	●		●		●			●	●	●			●	●		●	●		●		●		●		●	●	●	●	●
Commercial Equipment	●	●	●	●	●	●	●	●	●	●				●	●	●	●	●	●	●	●		●	●										
Pellet stoves								●													●													
Level indication						●																												
Textile machines																	●																●	
Credit card readers															●	●																		
Pan and tilt cameras												●	●																					
Chart recorders															●	●																		
Tachograph															●	●																		
Conveying								●		●											●													
Mechanical handling																																		
Copier & Printer						●		●							●			●	●		●	●												
Distribution			●	●		●	●	●	●	●				●	●		●	●	●	●	●	●	●	●	●	●	●	●	●		●	●		●
Home Appliances				●	●	●		●								●	●							●		●							●	●
Industrial automation			●																															
Specialist vehicles						●												●	●		●													●
Waterheaters/Showers				●		●													●		●													
Circuit Breaker				●				●			●							●			●						●		●					
HVAC		●	●	●	●	●	●	●	●	●	●	●			●		●	●	●	●	●		●	●	●	●	●	●		●	●		●	●
Page	29	32/34	36/39	42/44	46	48	50	55/57	61	64	69	72	75	79	82	86	88/92	96/99	102	105	108/111	115	120	124/127	130	133/136	139	141	149	153/156	159	161	168/171	174

Table of typical applications & Cam Programmer Series

In addition to the products shown in the Product Catalog pages, the Product Mapping table below shows a wide range of cam programmer types for a selection of applications. Also, cam programmers may be customized to fulfill your specific requirements, please feel free to contact us.

Application Cam Programmer		KKP	KKC	KKD0	KKD2-01	KKD02-02	KKD1	KKD7	KKD2	KKD3	KKD6	KKD4	KKH - - - 00	KKH - - - 88	KKH - - - - -
Healthcare & Medical Equipment		●	●	●	●	●	●	●	●	●	●		●	●	●
Personal Care	toilet cabins			●	●	●									
	hand dryers	●													
	hair dryers	●											●	●	
	solariums												●	●	
	saunas	●	●										●	●	●
	whirepool												●	●	●
	swiming pool	●	●	●	●	●	●	●	●	●	●		●	●	●
	fountain variables	●	●	●	●	●	●	●	●	●	●		●	●	●
Building Automation & Security	fog horn	●	●	●	●	●	●	●	●	●	●		●	●	●
	bell towers	●	●	●	●	●	●	●	●	●	●		●	●	●
White Goods	defrosing	●	●	●	●	●	●	●							
	Ice cube machine	●													
Home Appliances	coffee machine	●											●		●
Heating Ventilation & Air Conditioning	heating ventilation	●	●	●	●	●	●	●	●	●	●	●	●	●	●
	sanibroyeurs	●		●											
	pottery ovens												●	●	
Industrial equipment & automation	automation	●	●	●	●	●	●	●	●	●	●		●	●	●
	galvano	●	●	●	●	●	●	●	●	●	●		●	●	●
	test equipment	●	●	●	●	●	●	●	●	●	●		●	●	●
	food specialities	●	●	●	●	●	●	●	●	●	●	●	●	●	●
	botteling	●	●	●	●	●	●	●	●	●	●		●	●	●
	newspaper	●	●	●	●	●	●	●	●	●	●		●	●	●
	milk truck cleanning	●	●	●	●	●	●	●			●		●	●	●
	carwash			●	●	●	●	●			●		●	●	●
	battery loader												●	●	
	milking equipment	●	●	●	●	●	●	●			●		●	●	●
	drying	●	●										●	●	
Business Machines	bookbinding	●	●	●	●	●	●	●			●	●	●	●	●
	Vending machines	●	●	●	●	●	●	●	●	●	●		●	●	●
	feeding systems	●	●	●	●	●	●	●	●	●	●	●	●	●	●
Page		186	188	190	192	193	194	196	198	200	202	204	208	210	212

Saia Motors Important notes

General

All specifications for torque, force and power are representative only and maybe subject to variation due to manufacturing tolerances.

Saia motors motors, except UR types, fulfil basis insulation requirements of EN 60335-1: 2004.

Application advice
The requirements for protection class I, II or III according to EN 60355-1: 2004 have to be fulfilled by customer application.

Stepper motors

Specified data for torque values is valid for
- a duty cycle of 100%, in Performance Charts additionally for 30% (cycle time: 5 min, type URG only 1 min.)
- an ambient temperature of 23 ±5°C
- a defined driver circuitry, with constant voltage supply
- at rated voltage

Depending from operational conditions, max. load torque must be lower than specified torque in catalogue. Please send us an enquiry.

If duty cycle or actual maximum ambient temperature is lower, the motor can be designed for higher performance (torque and power) by using a different winding.

Chopper driver circuits can be applied alternatively to a driver with constant voltage supply. They are more expensive, but bring higher performance. Additionally, they eliminate the effects of temperature and supply voltage change.
Performance charts available on request.

Step angle tolerance is about ±5%
(not cumulative)

Synchronous motors

Specified data for torque/power values are valid for
- a duty cycle of 100%
- an ambient temperature of 23 ±5°C
- at rated voltage
- synchronous torque (not starting torque)

Torque is specified with maximum values, overloading is not permissible.

Depending from operational conditions, max.load torque must be lower than specified torque in catalogue. Please send us an enquiry.

If duty cycle or actual maximum ambient temperature is lower, the motor can be designed with higher performance by using a different winding.

The basic design is the same as for our stepper motors, but the motors are operated by a sinus waveform voltage.
A capacitor, connected to one of the motor coils, is necessary for rotation in the appropriate direction.

Motor type UDS is a special design: It has only one coil, but is fitted with an internal ratchet. This ratchet determines the direction of rotation. A capacitor is not necessary.

Mechanical and electrical connections

On request we can deliver other options, e. g.
- special motor shafts
- pinions on shaft
- special cable lengths
- connectors

Saia motors Gearboxes

Saia motors gearboxes are available in a variety of sizes to meet a wide range of torque requirements. Ratios from 4 1/6 to 6.048.000 are available. The basic design is a spur gearbox with gear wheels in metal, plastics and combinations of the two materials. A particular feature is the availability of freewheels and slipping clutches.
The gearboxes are turned by the motor, energy flow is from input to output shaft. That means, they are not allowed to be driven by the output shaft (for instance turning manually). This can lead to damage of some internal components!

Direction of rotation

As a function of the number of stages, the direction of rotation can be either clockwise or counter clockwise. The direction of rotation of motor gearbox units is generally specified by the gearbox output shaft (drive-side, see DIN EN60034-7, IEC 60050-411).

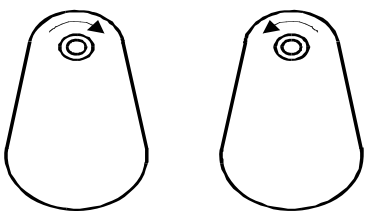

clockwise counter clockwise

Ratio

A gearbox is characterised by its gear ratio i or its time T. Gear ratio i is the ratio of input speed ne and output speed na. T is the time for one revolution of the output shaft.

Permissible force FA and FR at the output shaft

Permissible force loads at the output shaft are:

- Axial load FA, pulling or pushing in axial direction of the shaft
- Radial load FR acting laterally on the shaft. The catalogue value is referred to a distance of 1 cm to the bearing

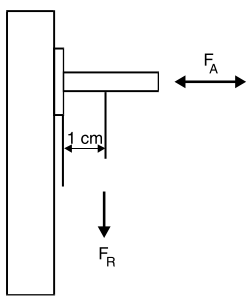

Permissible Torque

The lifetime of a gearbox is determined by the load on the gear teeth and the number of revolutions of the gear wheels.

The maximum permissible torque Mn is defined by the load on the final stage of the gearbox and the stability of the housing.

Some gearboxes have lifetime graphs. It shows the relationship between ratio i and the associated torque for a fixed period of time, e.g. 1000 or 10000 hours. A_conditional parameter is the input speed (equivalent to motor speed) corresponding to the total number of revolutions of all gear wheels. In the catalogue we show therefore two curves – for a motor having 250/300 rpm and 500/600 rpm.

For example: Max.output torque Mx1 is permissible at a ratio of ix1. With smaller ratios the max. permissible torque has to be reduced, because otherwise the first stages of the gearbox would be overloaded.

Additionally to the lifetime curve the motor torque Mm, multiplied by gear ratio and reduced by the gear efficiency, is shown (resulting in output torque Mi).

$$i = \frac{n_e}{n_a} \qquad T = \frac{i\,T\,60}{n_e}$$

With n in rpm
T in seconds

Saia motors Gearboxes

$$Mi = M^m \times i \times \eta_G$$

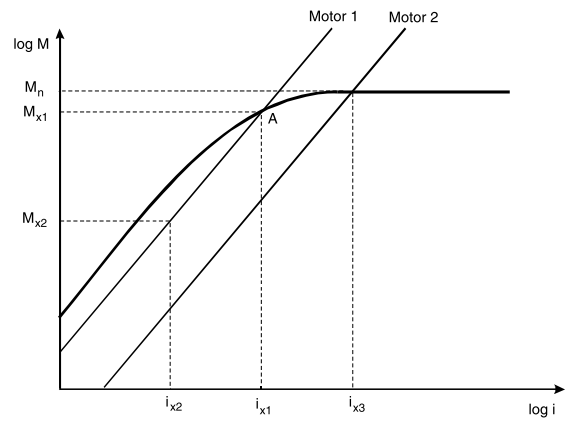

Example1: The application of motor 1 combined with a gearbox of ratio ix1 leads to an output torque Mx1 at point A. The gearbox can transmit this torque, meeting its lifetime.

If a ratio of i >ix1 is selected, actual torque would be M > Mx1. However lifetime cannot be guaranteed, as the operating point now lies above of the lifetime curve.

Example 2: Motor 1 with a ratio of ix2. Torque generated is Mx2. This is below of the lifetime curve. The transmission can operate for an extended period without difficulty.

Example3: Motor 2 and a ratio of ix3 give a torque of Mn. When using a ratio of i > ix3 - the gearbox cannot be loaded more than Mn.

Efficiency

The efficiency is determined by the number of gearbox stages.

Efficiency of UGO/UGP and UGR is specified in catalogue

Efficiency

The number of stages in the gearbox determines the efficiency. With high ratios of i this factor will decrease below 10%, as the graph below shows. (For UGO/UGP, UGR, see table in the chapter)

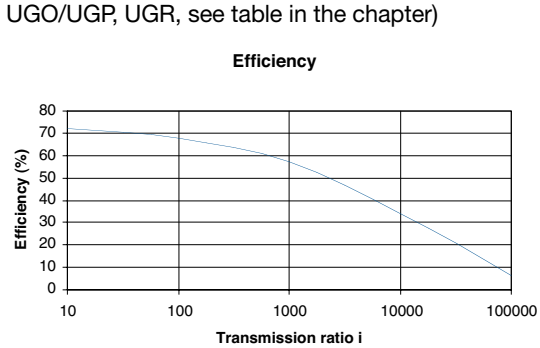

Saia motors Gearboxes Clutches

Gearbox types UGA, UGB and UGD can be fitted with freewheels or slipping clutches. Freewheels transmit the max. torque M in the locked direction, <1 cNm in the opposite direction. One way slipping clutches behave similarly except that the slip torque has a higher value. Two way slipping clutches can only transmit a limited torque value in either direction lower than the slip torque.

Slipping clutches are used to: Protect the gearbox against torque overloads, or to adjust the load by turning from the load side (remember: turning the output shaft directly can otherwise damage the gearbox).

Slipping clutch	One way	One way	Two way
Freewheel	yes	yes	no
Torque, clockwise	full torque	< slipping torque	< slipping torque
Torque Anti clockwise	< slipping torque	full torque	< slipping torque
Output shaft turning, clockwise	slipping possible	blocking	slipping possible
Output shaft turning, anti clockwise	blocking	slipping possible	slipping possible

Common Explanations of characteristics

Power consumption P_{in}

The power consumtion expressed in W was determined in no-load operation

Load

The total sum of all static and dynamic torques (e.g. friction torque, mass inertia, acting on the rotor).

Speed n

rmp revolution per minute

Torque

The running torque in cNm (also synchronous, braking or dynamic torque) defines the load at which the synchronous motor falls out of synchronism and stalls.

Power output

The power output expressed in W is determined according to the following formula

$$P_{out} = \frac{M_d \times 2 \pi \times n}{60} = [W]$$

M_d in Nm (1 cNm = 0,01 Nm), n in rpm

Pole pair number

The number of rotor pole pairs North/South.

Direction of rotation

This information always refers to the output shaft, either of the motor or of the gearbox.
Right = clockwise rotation (CW),
Left = counterclockwise rotation (CCW)

Gear torque

The maximum gear torque in cNm defines the maximum load for a required life of at least 1000 operating hours.

Running time

This value refers to the time (t) per revolution (U); they are calculated using the following formula

$$t/U = \frac{i}{n} \times 60 = [sec.]$$

i = transmition ratio
n = motor speed

Axial thrust / lateral force / lateral torque

These values refer to the loads on the standard output shaft of the respective gear.

The permissible lateral torque referring to the standard shaft must not be exceeded on special shafts either.

General technical terms relating to the synchronous motor and torque limited synchronous motor

Synchronous

The running of the rotor at the same speed as the stator field which is determined by the frequency of the supply.

Synchronous speed

Constant speed of rotation at constant frequency based upon the number of pole pairs of the motor

$$n = \frac{f \times 60}{p}$$

f = frequency (Hz), n = speed (rpm)
p = number of pole pairs

Synchronous torque

Torque which the motor is still capable of producing without falling out of synchronism, once the synchronous speed of rotation has been reached.

Starting torque

Load torque the motor is capable to start.
It is influenced by the type and manner of coupling to the load, the load inertia, the gearbox design and the supply voltage. In the case of a very large reduction ratio a small external moment of inertia and nominal gearbox play the starting torque becomes equal to the synchronous torque.

Detent torque (static)

Defines the maximum torque which can be applied to a deenergised motor without causing the motor to rotate. Catalogue specifications refer to the static detent torque.

Detent torque (dynamic)

Defines the maximum torque at which the motor comes to an immediate standstill from synchronous running when the excitation current is switched off.

Permissible load inertia

Is the maximum inertia load the motor can start without external help.

Stall-proof

Synchronous motors with permanent magnet rotors can be stalled without damage to the motor winding.

Torque limit (Torque limited motors)

The constant torque produced by the hysteresis-magnetic clutch within the torque limited synchronous motor in the stalled condition.

Design characteristics

The basic design is the same as for our stepper motors, but the motors are operated by a sinus waveform voltage.

General technical terms relating to the stepper motor

ED or Duty Cycle

Duty cycle of operation, based on a cycle time of 5 minutes (1 minute for URG) and a frequency f=0Hz; e.g. ED=30% means that the motor can be continuously powered 1.5 minutes (30% of 5 minutes) without overheating

Step

Rotary movement of the rotor through one step angle.

Step angle

Rotary angle through which the motor shaft turns per controlled pulse.

Stepping frequency

Number of steps of the stepping motor in 1 sec.

Driver

Electronics which convert step and direction input signals to high power currents and voltages to drive a step motor.

Unipolar driver

Unipolar means that every coil end has one polarity only. A unipolar coil consists in fact of 2 coils. Alternating the current flows through one of these coils and in one direction. Compared to a bipolar motor only half of the copper is used at time.

The motor phase winding must be center tapped. On the SAMOTRONIC101 this is already fixed on the board.

Often an additional Zener diode is used to ensure a fast current decay in the switched-off coil. This will give an increased motor torque especially at higher frequencies.

Torque graphs in this catalogue are measured with a 10V Zener diode.

Bipolar Driver

Bipolar indicates that every coil end is bipolar, during driving it will be „+“ as well as „-“.Since every coil is fully used the motor has a higher torque compared to a unipolar one.

Very often a bipolar driver has a constant current drive capability (also called chopper). That will give an increased torque output on higher frequencies and a lower influence of temperature and supply voltage variations. Typical applications use the SAMOTRONIC102.

Rotational speed

Revolutions of the motor per minute calculated from:

$$n = f \times \frac{\alpha \times 60}{360°}$$

f = stepping frequency, α = step angle.

Detent torque (static)

Defines the maximum torque which can be applied to a deenergised motor without causing the motor to rotate. Catalogue specifications refer to the static detent torque.

Holding torque

Defines the maximum torque with which an energized motor can be loaded without giving rise to a continuous rotary movement.

Pull-in torque

Operation torque when switching on step frequency at once, without a ramp.

pull-out torque

Operation torque when applying an acceleration / deceleration ramp.

Load inertia moment

The sum of all the mass inertia moments occurring on the shaft of the stepping motor.

Steps/rev

The number of steps per 360° rotation.

Maximum operating torque

The maximum torque which a stepper motor without external mass inertia can generate without stepping losses.

Saia Cam Programmers Technical information

General

Among automation components, the cam programmer offers the simplest way of repeating a preset program as often as necessary.

Technology

A synchronous motor with reduction gear rotates, in a defined time, the axis on which cams have been programmed. Each cam activates a change-over microswitch, which turns on and off, at the required time, the various devices of a process.

Functions

The KKC, KKD and KKP are programmers that execute a defined program, either once only or repeating continuously, depending on how they are connected.

The KKH is a timer, to which a rotary knob has to be fitted that the user sets to the required time. When this time elapses, the switch will be tripped. The KKH can, however, also include a program with on/off switching for several timed devices.

Drive unit

The programmer's basic drive unit is a Saia UDS1 synchronous motor and Saia UGD reduction gear. For accuracy of timing and program execution, the time base is provided by the network frequency of 50Hz or 60Hz.

In certain special cases requiring higher torque or a different program duration, other combinations may be chosen out of Saia's wide motor/reduction range.

For example, the KKD2 and KKD3 devices are based on the Saia UDR1 reversing motor, and the KKD4 on Saia UFB1 stepper motor.

Program duration

The combination of Saia motors (mainly UDS) and reduction gears (generally UGD) covers all required durations between 1 second and 120 hours

The program can be set to its start position by means of a control knob.

Usually, one of the cams is reserved as the program end stop.

Number of channels and commutations

The KKC programmer comprises 1 or 2 cams, the KKP 1 to 4 cams, and the KKD up to 30 cams.

The KKH timer has 1, 2 or 3 cams.

Each channel has 1 change-over microswitch with 1 or more (to over 20) on/off operations during the course of the program.

Lower duration limits and number of channels

Each channel consumes 0.5 cNm of torque and each microswitch actuation takes 1.5 cNm.

For programs lasting less than 30s, see the following diagram regarding limits on the number of channels and simultaneous switch operations possible.

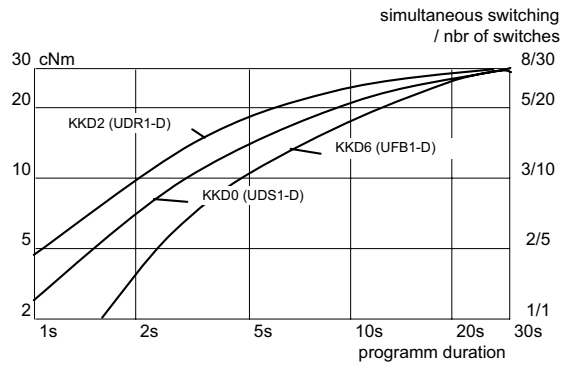

Microswitches with higher cutoff power will inevitably absorb more torque. That has also to be taken into account.

Program definition

The programmer comprises either adjustable cams or a specifically defined program.

Defined program

Specific programs are produced with milled cams, according a diagram supplied by the customer with all on/off switching sequences for each cam.

A specific program may also be produced in cam segments, programmed according to the customer diagram, but allowing later adjustment to meet local requirements.

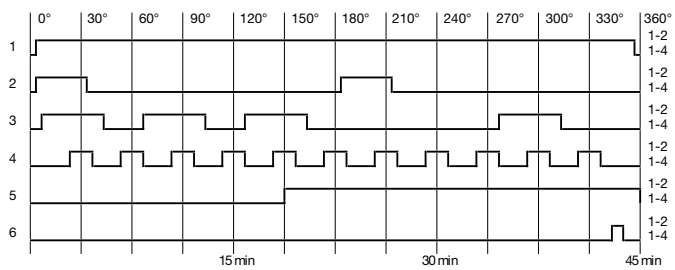

Adjustable cams

Cam Programmers to be adjusted by the integrator are equipped with segments cam or riders cams

Segments and riders are to be adjusted accordingly, meaning key and setting knob with graduated scale.

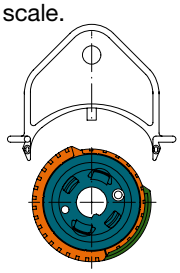

Key and Segment Cam and its adjusting Key

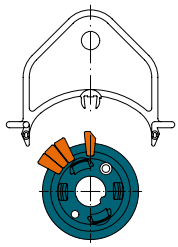

Ficher Cam and its adjusting Cam

On the KKD1 and KKD7 (which have 2 motors) and the KKD3 (which has a potentiometer), this setting knob is located inside.

Microswitch cutoff power

KKC, KKD and KKP programmers are equipped with XGC microswitches of 6(3)A/250V according to ENEC, and 10A250VAC according to UL.

KKH timers are equipped with XGG microswitches of 16(3)A/250V according to ENEC, and 15A250VAC according to UL.

On request, devices may be fitted with other, more powerful microswitches (up to 25A260VAC) if other parameters allow (program duration, number of simultaneous switch operations).

Custom models

If any required characteristics cannot be found in the « standard » versions offered, pleased feel free to contact your Saia agent. Possibilities too numerous to mention (other voltages, program durations, cutoff power, etc.) will in most cases allow production of a variant that meets the application's specific requirements

Standards and approvals

All KKC, KKD and KKP programmers and KKH timers have been designed to meet prevailing European standards and are supported by a certificate of conformity.

Each of these devices is also available as a version « with UL and CSA approval » (specified in the order code)

Tolerances and precision of program

The sum of all cam deviations, milling, the transmission lever and microswitch comprise a switching point variation of +/- 1°, i.e. +/- 0.3%

Overall tolerance, comprising deviations inherent in each cam and to which are added deviations due to the distance between the first and last cam, microscopic differences between microswitches and the repetition of several program cycles, amounts to +/- 3.6°, i.e. +/- 1%

It is important to remember this tolerance when defining switch operations that are in very close proximity, especially if non-observance of a required sequence might create a problem.

In such cases, it is advisable to place interdependent channels side-by-side.

If necessary, ask for the channels concerned to be fitted with an adjustable lever, or choose the faster motors of the KKD1 or KKD7 for delicate sequences.

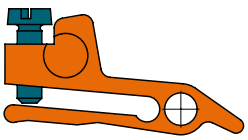

adjustable lever

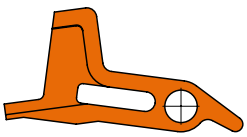

Standard lever

Simultaneous switching

Only the KKP may be fitted with a special lever that offers, under certain conditions, simultaneous switching of 2 or 3 channels. For the KKD, simultaneous switching is not mechanically possible, However, certain connecting strategies can be used to achieve electrically simultaneous switching.

The simultaneous switching of several program channels

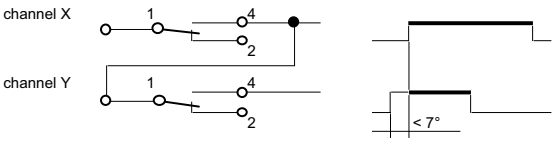

The chronological switching of several program channels

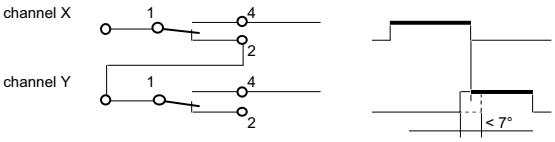

Mounting

The KKD has been designed for mounting onto 35mm DIN rail. However, like the KKC, it also has holes for screw mounting.

The KKP housing is fixed on any side meaning two screws. A bridle (order separately) allows a third fixing point.

The KKH timer is generally mounted behind the front panel meaning two screws 30 mm apart, located above and below the cam shaft. The choice of screw type (M3, M4 or self-tapping) is specified in the order code.

Connection

Microswitches and KKC and KKD motors are fitted with 6.3 x 0.8 mm connecting tabs for plug-in terminals for crimping or welding, while KKP and KKH motors have 150 mm wires fitted with female connectors size 6.3 x 0.8 mm
Only the KKD6 has screw terminals for connecting the stepper motor.

Lifetime

Motors are designed to run for at least 20 000 hours (>2 years continuously !)

With microswitches, it is necessary to differentiate between a mechanical lifetime of 2 million (KKH) to 50 million operations (KKC, KKD and KKP) and an electrical lifetime that depends on the current to be cut, according to the following diagram.

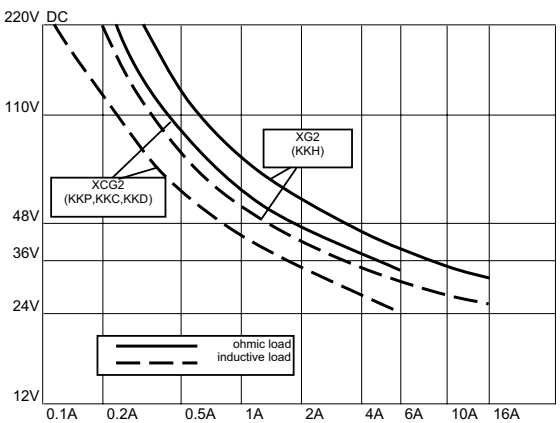

Temperature

Operating temperature -15°C to +50°C (-30° to +90° on request)

Protection class

Motors and microswitches belong to protection class IP40.

Since connections are not particularly protected, integrators will have to build the necessary electrical precautions into the application for the protection of the user.

Main advantages of Saia cam programmers

Direct control of loads up to 16A 250VAC.

As well for individual solution as for series production.

Modular system with almost no limits (up to 30 channels, several drive type, any program duration, cam type, choice of a microswitch with higher cutoff power).

The extreme flexibility of this modular system offers a practically « tailor-made » application.

Adjustable cams and system modularity offer the possibility of subsequent adaptations.

Exemplary reliability and remarkable functional security with the recognized high quality of Saia components (synchronous and stepper motors, reduction gears, microswitches) associated with proven materials.

Extremely simple mounting, fastening and wiring.

Easy service, accessible to everyone, thanks to straightforward electromechanical technology.

Switching examples

Running under control of a simple contact
stops at any position when S opens

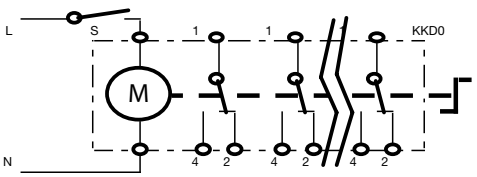

Program with a "zero position" defined on cam P1

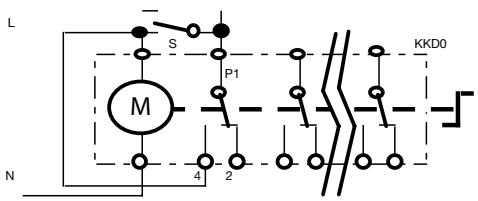

Forward and return to end positions (on KKD2)
The changeover of S, runs the program to its other end.
Two end positions defined on cams P1 and P2

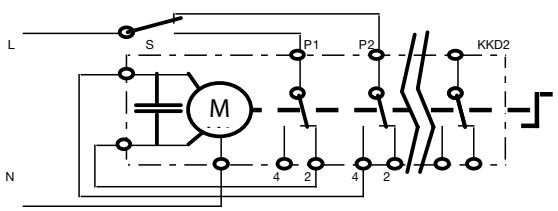

Further switching behaviour with help of a relay:
Starting by short pulse (KKD0)
Jump to start after voltage failure (KKD1)
Cyclic go and back between two ends (KKD2)

Synchronous Motors

Rotational

Type	URT	UAT1/UAT3	UCM/UCR	UBR1/UBR2	UDR
Dimensions (mm)	∅ 13 x 11	∅ 20 x 17	∅ 28 x 24	∅ 36 x 21	∅ 48 x 24
Characteristics	▪ **smallest** motor ▪ optional planetary gearbox with diameter 13mm ▪ pin connection or flex print	▪ long life ▪ precision bearing ▪ standard 24VAC motor ▪ **economic volume** solution	▪ **standard modules** ▪ customer specific interfaces	▪ **wide range** of customised versions available ▪ up to 230 VAC supply voltage	▪ **compact** reversible synchronous motor
Voltage (V)	3–24	12–48/24	12–230	12–230	12–230
Speed 50 Hz (rpm) 60 Hz (rpm)	600 720	600 720	250/500 300/600	250/500 300/600	500 600
Pole number	10	10	24/12	24/12	12
Running torque (cNm) 50 Hz 60 Hz	 0,06 0,06	 0,31/0,32 0,3/0,3	 0,8–1,3 0,8–1,3	 0,75–0,9 0,72–0,9	 1,5 1,4
Power output (W) 50 Hz 60 Hz	 0,038 0,038	 0,19/0,2 0,23/023	 0,31–0,58 0,38–0,69	 0,24–0,39 0,28–0,45	 0,77 0,87
Gear combination	on request	on request	on request	A, D, M, B, F, V, J	A, D, M, B, F, V, J
Page	29	32/34	36/39	42/44	46

Rotational

Type	UDS	UO (SM5021/SM5022)	UFM/UFR	UHM	UP (SM6443/SM6444)
Dimensions (mm)	∅ 48 x 18,5	∅ 50 x 21	∅ 52 x 28 (56)	∅ 59 x 35 (70)	∅ 64 x 43
Characteristics	▪ **simple to connect,** only two wires ▪ no capacitor ▪ uni-directional with anti-return mechanism	▪ **three speeds** versions ▪ wide range of torque capacities	▪ **three-phase AC** operation possible ▪ for high power 2, 3 or 4 coils	▪ **powerful** motor ▪ synchronous version of the stepper motor UHD	▪ **most powerful** package with STG/V gearboxes
Voltage (V)	6–230	6–230	12–230	12–230	12–230
Speed 50 Hz (rpm) 60 Hz (rpm)	500 600	250/375/500 300/450/600	250/500 300/600	250 300	250/375 300/450
Pole number	12	24/16/12	24/12	24	24/16
Running torque (cNm) 50 Hz 60 Hz	 0,9 0,8	 2,0–7,5 1,8–7	 2,8–5,3 2,6-4,7	 8,5–15 6,6–9,5	 10,3–35 8,5–30
Power output (W) 50 Hz 60 Hz	 0,5 0,5	 0,65–2,75 0,78–3,0	 1–2,8 1,1–3	 2,2–3,9 2,1–3	 3,5–13,8 3,9–14,2
Gear combination	A, D, M, B, F, V, J	VK4, O, P, R	A, D, M, B, F, V, J, O	J	O, P, R
Page	48	50	55/57	61	64

Synchronous Motors

Rotational, Torque Limited

Type	**UNU0** (SM3532RG)	**UOU0** (SM5032RG)	**UPU0** (SM6469RG
Dimensions (mm)	∅ 35 x 32	∅ 50 x 32	∅ 64 x 69
Characteristics	■ **torque limiting feature** ■ abrasion-free, integrated low noise magnetic hysteresis clutch		
Voltage (V)	24–230	24–230	24–230
Speed 50 Hz (rpm)	375	375	375
60 Hz (rpm)	450	450	450
Pole number	16	16	16
Torque Limited (cNm)			
50 Hz	0,6	2	7
60 Hz	0,6	2	7
Power output (W)			
50 Hz	0,25	0,8	2,75
60 Hz	0,3	0,95	3,3
Gear combination	O, P, R	O, P, R	P, R
Page	69	72	75

Stepper Motors

Rotational

Type	URG	UAG1/2	UAG3/4	UCD/UCB	UBD/UBB
Dimensions (mm)	∅ 13 x 11	∅ 20 x 17	∅ 20 x 17	∅ 28 x 24	∅ 36 x 21
Characteristics	▪ **high dynamic** performance ▪ optional planetary gearbox with motor diameter ▪ pin connection or flex print	▪ **precision bearing** standard motor	▪ **economic volume** solution	▪ **standard modules** ▪ customer specific interfaces	▪ **wide range** of customised versions available
Step angle(°)	18	18	18	7,5/15	7,5/15
Holding torque (cNm)	0,20	0,7/0,5	0,56/0,42	1,3–2,7	1,0–1,9
Detent torque (cNm)	0,03	0,14	> 0,06	0,26–0,42	0,22–0,36
Winding	bipolar	bipolar/unipolar	bipolar/unipolar	bipolar/unipolar	bipolar/unipolar
Gear combination	on request	on request	on request	on request	A, D, M, B, F, V
Page	79	82	86	88/92	96/99

Rotational

Type	UDB	UO (ST5021/ST5022)	UFD/UFB	UHD	UP (ST6443/ST6444)
Dimensions (mm)	∅ 48 x 24	∅ 50 x 21	∅ 52 x 28 (56)	∅ 59 Tx 35 (70)	∅ 64 x 43
Characteristics	▪ **compact** reversible 15° stepper motor	▪ **three step angle** motor ▪ wide range of torque capabilities	▪ **two step angle** motor	▪ **powerful** standard motor ▪ 7,5° stepper motor	▪ **most powerful** package with STG/V gearboxes
Step angle(°)	15	7,5/11,25	7,5/15	7,5	7,5/11,25
Holding torque (cNm)	2,2–2,7	3,7–4	6,4–45,3	13–45,5	30–45
Detent torque (cNm)	0,35	0,25–1	0,45–0,8	1,3–5,3	2–7
Winding	bipolar/unipolar	bipolar	bipolar/unipolar	bipolar/unipolar	bipolar
Gear combination	A, D, M, B, F, V, J	VK4, O, P, R	A, D, M, B, F, V, J, O	J	O, P, R
Page	102	105	108/111	115	120

Gearboxes

Type	UGA/UGD	UGM	UGB/UGF
Dimensions (mm)	55 x 62/65,6	51 x 65.2	58 x 81
Characteristics	▪ **established** plastic gears ▪ wide range of ratios ▪ gears rotate on hardened steel shafts ▪ optional integrated slipping clutches	▪ **volume** metal and plastic spur gears ▪ hardened steel shafts encluded in plastic housing and metal plate	▪ **robust** metal spur gears ▪ plastic primary gears ▪ die-cast aluminium housing
Height	12/13	15	17
Max. torque (cNm)[1]	32	100	250/500
Ratios	A: 41/6...360.000 D: 41/6...6.048.000	1211/2...4800	B: 412/3...345.600 F: 41/6...5000
Internal slipping clutch	optional	–	optional (UGB)
Standard shaft (mm)	∅ 4 x 10	∅ 4 x 10	∅ 8 x 12
Page	124/127	130	133/136

[1] max. value, for higher ratios

Type	UGV	UGO/UGP (STG60/STG61)	UGJ	UGR (STG200)
Dimensions (mm)	70 x 70	∅ 65/68 x 68	65 x 107	70 x 130
Characteristics	▪ **solid** metal spur gears ▪ die-cast aluminium housing	▪ **high performance** hardened steel spur gears ▪ low teeth profile ▪ optional interface plates for DC motors ▪ option additional housing for IP 65	▪ the most extensive **gear ratio range** ▪ medium torque two plate gear type with metal spur gears	▪ **high performance** metal gear type ▪ robust aluminium twin plate design ▪ can be used with DC motors
Height	17	29,8–382)	28	38
Max. torque (cNm)[1]	500	600	1500	2000
Ratios	81/3...2.000	61/4...5400	41/6...36 Mill. ≥ 2500 with UGD	61/4...375
Internal slipping clutch	–	–	–	–
Standard shaft (mm)	∅ 8 x 12	∅ 8 x 22	∅ 12 x 20	∅ 12 x 35
Page	139	141	146	149

[1] max. value, for higher ratios [2] depends on ratio

Synchronous Motors

Linear

Type	UCC/UCK	UBK	UO Linear actuator (LA5021SM)	UO Spindle actuator (SP5021/5022SM)
Dimensions (mm)	∅ 28 x 31	∅ 36 x 36	∅ 50 x 76	∅ 50 x 27
Characteristcs	▪ **new linear** motor using modules of the UC range ▪ integrated non-rotational thread spindle	▪ **standard** linear motor ▪ for extended travel the spindle has to be retained externally	▪ linear actuator with **3 speeds** ▪ **50 mm travel** ▪ integrated non-rotating threaded spindle	▪ spindle type ▪ threaded spindle has to be retained exter-nally ▪ for **extended travel**
Travel (mm)	10/13	8/13/56	45–50	68–130
Voltage (V)	12–230	12–230	12–230	12–230
Thread pitch (mm)	1,0	1,0	1,5/1,5/1,5	1,5/1,5/1,5
Speed (mm/s) 50 Hz 60 Hz	 4,16/8,33 5/10	 6,67/8,33 8/10	 6,25/9,37/12,5 7,5/11,25/15	 6,25/9,37/12,5 7,5/11,25/15
Pole number	24/12	12	24/16/12	24/16/12
Max Force (N)	35	35	45–50	45–70/50–70
Page	153/156	159	161	163

Stepper Motors

Linear

Type	UCE/UCL	UBL	UO Linear actuator (LA5021ST)	UO Spindle actuator (SP5022ST)
Dimensions (mm)	∅ 28 x 33	∅ 36 x 36	∅ 50 x 76	∅ 50 x 27
Characteristics	▪ **new linear** motor using modules of the UC range ▪ integrated non-rotating threaded spindle	▪ **general purpose** linear motor ▪ for long travel version the spindle has to be retained externally	▪ linear actuator with **3 step widths and 50 mm** travel ▪ integrated non-rotating threaded spindle	▪ spindle type ▪ threaded spindle has to be retained exter-nally for **extended travel**
Travel (mm)	10/13	8/13/56	45–50	68–130
Travel per step (mm)	0,021/0,041	0,041	0,031/0,047/0,063	0,031/0,047/0,063
Thread pitch (mm)	1,0	0,8	1,5/1,5/1,5	1,5/1,5/1,5
Speed (mm/s) at 200 Hz	 4,16/8,33	 8,33	 6,25/9,37/12,5	 6,25/9,37/12,5
Step angle (°)	7,5/15	15	7,5/11,25/15	7,5/11,25/15
Max. Force (N)	35	35	45–50	50–70
Page	168/171	174	176	178

Electronics for Stepper Motors

Driver Boards

Type	Samotronic101	Samotronic102	Evaluation-Kit 2
Dimensions (mm)	55 x 40	84 x 54	metal case 164 x 130 x 45 (Euro-PCB)
Characteristics	▪ small **unipolar** driver **board**	▪ small **bipolar** driver **board** ▪ flash controler ▪ optional customised software	▪ tool for development, test and optimisation of stepper drive systems ▪ windows-based software ▪ quick parameter setup ▪ visualisation of speed and position ▪ positioning sequences capability
Driver	▪ for unipolar motors	▪ for bipolar motors	▪ for unipolar and bipolar motors
Supply voltage (V)	10–24 DC	standard version 10–24 DC enhanced version 10–42 DC	3–48 DC 24 AC
Motor current	constant voltage drive	constant current drive (chopper controlled) adjustable via potentiometer	constant voltage drive and constant current drive (chopper controlled)
Step mode	full/half step	full/half step	full/half/micro step
Clock source	internal or external	internal or external	internal, programmable
Control inputs to	▪ inhibit internal clock ▪ inhibit motor current ▪ change direction of rotation	▪ inhibit internal clock ▪ inhibit motor current ▪ change direction of rotation	▪ 3 digital inputs ▪ 4 signal outputs ▪ 1 analog input 0…10 VDC ▪ 1 relay contact
Configuration	via DIP-switch, potentiometer	via DIP-switch potentiometer	RS 232, USB
Page	182	183	184

Cam Programmers

Cam Programmers

Type	KKP	KKC	KKD0	KKD02 - 01/02	KKD4
Characteristics	▪ milled cams according ▪ customer requests	▪ milled cams according ▪ customer requests	▪ milled cams according ▪ customer requests	▪ segment cams adjustable ▪ snap-on rider cams adjustable by customer.	▪ no motor but shaft for external driving
Nombre channels	1, 2, 3, or 4	1 or 2	max. 30 Typ 4, 6, 8, 12, 20	max. 30 Typ 4, 6, 8, 12, 20	max. 30
Program duration	10 s . . . 120 h	10 s . . . 120 h	10 s . . . 120 h	10 s . . . 120 h	10 s . . . 120 h
Motor	Synchro, unidir	Synchro, unidir	Synchro, unidir	Synchro, unidir	no motor
Voltage	230 V, 50 Hz 110 V, 60 Hz	230 V, 50 Hz 110 V, 60 Hz	230 V, 50 Hz 110 V, 60 Hz	230 V, 50 Hz 110 V, 60 Hz	230 V, 50 Hz 110 V, 60 Hz
Switching power	12 (6) A; UL 10 A	12 (6) A; UL 10 A	12 (6) A; UL 10 A	12 (6) A; UL 10 A	12 (6) A; UL 10 A
Accessories				with setting key with snap-on riders	
Page	186	188	190	192	204
Optional	other voltages, other switching power, clutches, adjusting knob, UL approval,				

Type	KKD1	KKD7	KKD2	KKD3	KKD6
Characteristics	▪ two motors ▪ two speed	▪ two independant programms, driven by two motors	▪ bidirectional	▪ bidirectional with potentiometer 1 k ohm	▪ with stepper motor
Nombre channels	max. 30	max. 30	max. 30	max. 30	max. 30
Program duration	10 s . . . 120 h	10 s . . . 120 h	10 s . . . 120 h	10 s . . . 120 h	10 s . . . 120 h
Motor	Synchro, unidir	Synchro, unidir	Synchro, bidir	Synchro, bidir	Stepper
Voltage	230 V, 50 Hz 110 V, 60 Hz	230 V, 50 Hz 110 V, 60 Hz	230 V, 50 Hz 110 V, 60 Hz	230 V, 50 Hz 110 V, 60 Hz	230 V, 50 Hz 110 V, 60 Hz
Switching power	12 (6) A; UL 10 A	12 (6) A; UL 10 A	12 (6) A; UL 10 A	12 (6) A; UL 10 A	12 (6) A; UL 10 A
Accessories					samotronic
Page	194	196	198	200	202
Optional	other voltages, other switching power, clutches, adjusting knob, UL approval,				

Cam Programmers

Hand settable timer

Type	**KKH**	**KKH – 100**	**KKH – 200**	**KKH – 300**
Characteristics	▪ ▪	▪ motor and load on same switch	▪ motor and load on two separate switches	▪ motor and 2 loads on three separate switches
Nombre channels	1, 2 or 3	1	2	3
Program duration	1 min . . . 24 h	1 min . . . 24 h	1 min . . . 24 h	1 min . . . 24 h
Motor	Synchro, unidir	Synchro, unidir	Synchro, unidir	Synchro, unidir
Voltage	230 V, 50 Hz 110 V, 60 Hz	230 V, 50 Hz 110 V, 60 Hz	230 V, 50 Hz 110 V, 60 Hz	230 V, 50 Hz 110 V, 60 Hz
Switching power	16 (6) A; UL 15 A	16 (6) A; UL 15 A	16 (6) A; UL 15 A	16 (6) A; UL 15 A
Accessories	Knob, fixing . . .			
Page	208	210	212	214
Optional	other voltages, other switching power, clutches, adjusting knob, UL approval,			

With “on” position

Hand settable programmer

Type	**KKH – 288**	**KKH – 388**	**KKH – 2 –**	**KKH – 3 –**
Characteristics	▪ motor and load on two separate switches	▪ motor and 2 loads on three separate switches	▪ milled cams according ▪ customer requests	▪ **on three separate switches**
Nombre channels	2	3	2	3
Program duration	1 min . . . 24 h	1 min . . . 24 h	1 min . . . 24 h	1 min . . . 24 h
Motor	Synchro, unidir	Synchro, unidir	Synchro, unidir	Synchro, unidir
Voltage	230 V, 50 Hz 110 V, 60 Hz	230 V, 50 Hz 110 V, 60 Hz	230 V, 50 Hz 110 V, 60 Hz	230 V, 50 Hz 110 V, 60 Hz
Switching power	16 (6) A; UL 15 A	16 (6) A; UL 15 A	16 (6) A; UL 15 A	16 (6) A; UL 15 A
Accessories				
Page	216	218	220	222
Optional	other voltages, other switching power, clutches, adjusting knob, UL approval,			

Synchronous Motors

Dimensions

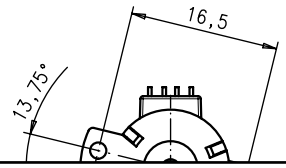

Circuit diagram

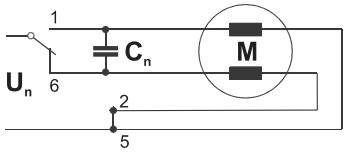

JOHNSON ELECTRIC

innovating motion

URT

Dimensions (mm)	∅ 13 x 11
Voltage (V)	3–24
Speed (rpm) 50 Hz	600
Pole number	10
Running torque * (mNm) 50 Hz/60 Hz	0,6
Power output (W) 50 Hz/60 Hz	0,038
Gear combination	–

* standard magnet

Standard Data

Climatic class	„wide-spread“ according to DIN IEC 60721-2-1
Ambient temperature operation	°C -15 ... +60
Ambient temperature storage	°C -20 ... +100
Thermal resistance at f=0 Rtherm	83 K/W
Thermal class	B according to DIN EN 60085
Approval	standard
Mounting	any position
Electrical connection	Pin, optional flex print
Protection	IP 40 according to DIN EN 60529
Weight	7 g
Rotor stalling	motor can be stopped when voltage is applied, without being overheated
Bearings	integrated high temperature plastic bearing

Order Reference

Type	Synchronous Motor	URT	1E	N	24 V / 50 Hz	R	N
Configuration	1E standard magnet						
Approvel	N						
Voltage/Frequency	See next page						
Direction	R reversible						
Connector	N Pin C flex print						

This motor type doesn’t fulfil basis insulation requirements of EN 60335-1: 2004
Customer application must realize a suitable protection class.

URT

Technical Data		URT1
Rated frequency	Hz	50
Speed n	rpm	600
Running torque M_n *	mNm	0,6
Detent torque M_S *	mNm	0,3
Power output	W	0,038
Power consumption	VA	0,75
Rotor inertia J_R	gcm2	0,033
Tolerance of voltage		standard power supply system +10%/–10%
Duty cycle		100%
Winding temperature T_{max}	°C	130
Direction of rotation		reversible
Capacitors Rated voltage UN	V	24
Operating capacitor C50	µF/40 VAC	2,2

* standard magnet

Circuit diagram Parallel circuit

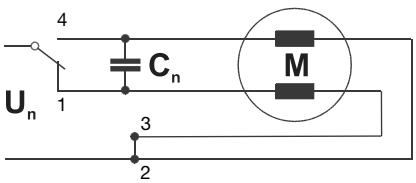

switch to
1 = clockwise rotation
4 = counter clockwise rotation

Dimensions

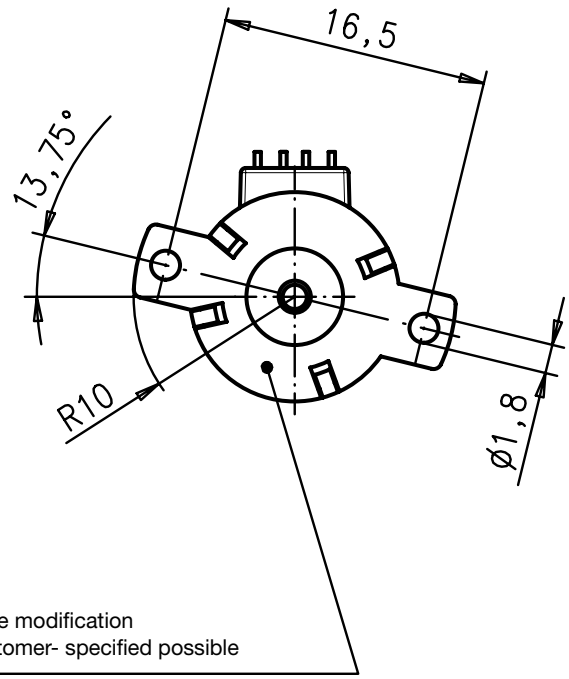

plate modification
customer- specified possible

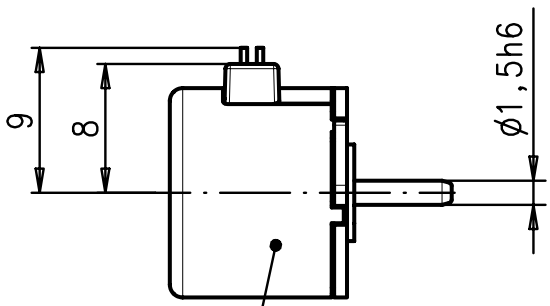

version with pin connection N

Dimensions

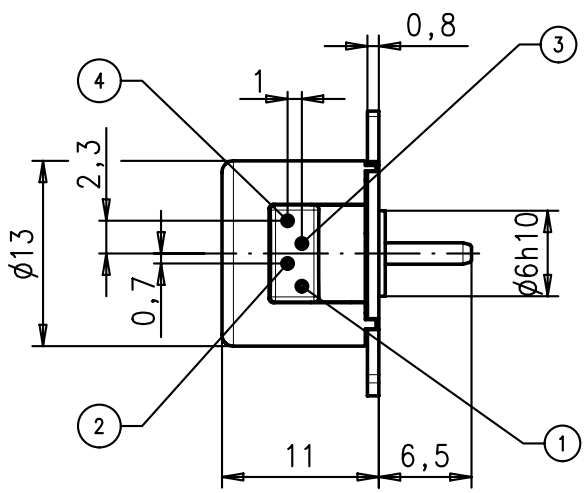
0,8
1
2,3
ø13
0,7
ø6h10
11
6,5
1
2
3
4

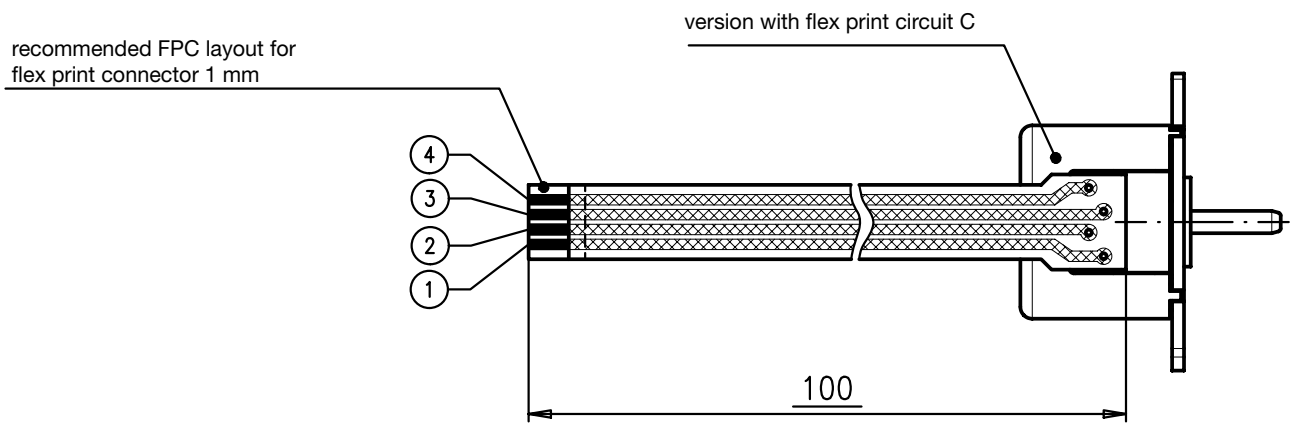
recommended FPC layout for
flex print connector 1 mm
version with flex print circuit C
4
3
2
1
100

UAT1

UAT1

Dimensions (mm)	∅ 20 x 17,2
Voltage (V)	12–48
Speed (rpm) 50 Hz	600
60 Hz	720
Pole number	10
Running torque (cNm) 50 Hz	0,31
60 Hz	0,3
Power output (W) 50 Hz	0,19
60 Hz	0,23
Gear combination	on request

Standard Data

Climatic class	„wide-spread“ according to DIN IEC 60721-2-1
Ambient temperature operation	°C -40 ... +60
Ambient temperature storage	°C -40 ... +100
Thermal resistance at f=0 R_{therm}	50 K/W
Thermal class	„B“ according to DIN EN 60085
Approval	standard
Mounting	any position
Electrical connection	insulation displacement connection, pins, lead wires
Protection	IP 40 according to DIN EN 60529
Weight	25 g
Rotor stalling	motor can be stopped when voltage is applied, without being overheated
Bearings	sintered bronze, self-lubricating

Order Reference

Type	Synchronous Motor	UAT1	0	N	24 V/50 Hz	R	E	
Rotor shaft, mounting	0	centring 8 mm, screw plate with thread M2						
	3	centring 8 mm, screw plate with slotted hole						
	A	centring 6 mm, screw plate with thread M2						
	E	centring 6 mm, screw plate with slotted hole						
Approval	N	Approval Standard						
Voltage/Frequency		See next page						
Direction		reversible						
Cable	E	Lead wires 150 mm with plug AMP MicroMatch 0-215083-6 (other on request)						

Technical Data

Rated frequency		Hz	50	60
	Speed n	rpm	600	720
	Power consumption	W	0,9	0,9
	Power output	W	0,19	0,23
	Running torque	cNm	0,3	0,3
	Rotor inertia J_R	gcm2	0,31	
	Detent torque M_S	cNm	0,1	
	Tolerance of voltage		standard power supply system + 10% / - 10%	
	Duty cycle		100%	
	Winding temperature T^{max}	°C	130	
	Direction of rotation		reversible	
Capacitors	Rated voltage U_N	V	24	48
	Operation capacitor C_{50}	µF/VAC	2,2/40	0,68/80
	Operation capacitor C_{60}	µF/VAC	2,2/40	0,68/80

Circuit diagram Parallel circuit

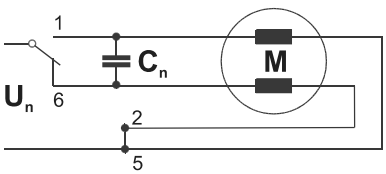

6 = clockwise rotation
1 = counter clockwise rotation

Dimensions

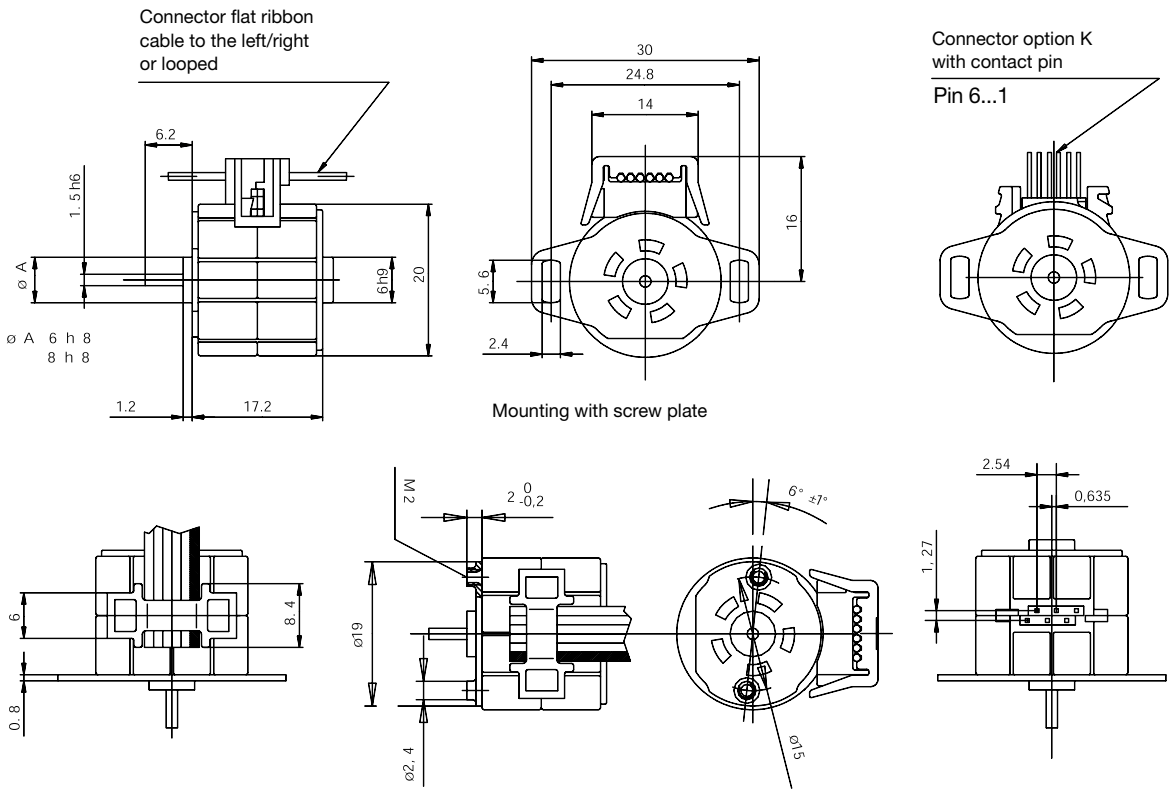

UAT3

UAT3

Dimensions (mm)	∅ 20 x 17,2
Voltage (V)	24
Speed (rpm) 50 Hz	600
60 Hz	720
Pole number	10
Running torque (cNm) 50 Hz	0,32
60 Hz	0,3
Power output (W) 50 Hz	0,20
60 Hz	0,23
Gear combination	on request

Standard Data

Climatic class	„wide-spread“ according to DIN IEC 60721-2-1
Ambient temperature operation	°C -20 ... +60
Ambient temperature storage	°C -40 ... +100
Thermal resistance at f=0 R_{therm}	47 K/W
Thermal class	„B“ according to DIN EN 60085
Approval	standard
Mounting	any position
Electrical connection	lead wires
Protection	IP 40 according to DIN EN 60529
Weight	22 g
Rotor stalling	motor can be stopped when voltage is applied, without being overheated
Bearings	sintered bronze, self-lubricating

Order Reference

Type	Synchronous Motor		UAT3	3	N	24 V/50 Hz	R	E
Rotor shaft, mounting	3	centring 8 mm, mounting plate with long holes						
	5	centring 8 mm, mounting plate (for clipping)						
	E	centring 6 mm, mounting plate with long holes						
	G	centring 6 mm, mounting plate (for clipping)						
Approval	N	Approval Standard						
Voltage/Frequency		See next page						
Direction		reversible						
Cable	E	cable 150 mm with Tyco connector CT 173977-4 (other on request)						

Technical Data

Rated frequency		Hz	50	60
	Speed n	rpm	600	720
	Power consumption	W	1,4	1,4
	Power output	W	0,20	0,23
	Running torque	cNm	0,32	0,30
	Rotor inertia J_R	gcm2	0,26	
	Detent torque M_S	mNm	> 0,6	
	Tolerance of voltage		standard power supply system + 10% / - 10%	
	Duty cycle		100%	
	Winding temperature T_{max}	°C	130	
	Direction of rotation		reversible	
Capacitors	Rated voltage U_N	V	24	
	Operation capacitor C_{50}	µF/VAC	3,3/40	
	Operation capacitor C_{60}	µF/VAC	2,7/40	

Circuit diagram Parallel circuit

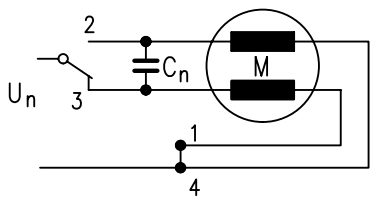

switch to
2 = clockwise rotation
3 = counter clockwise rotation

Dimensions

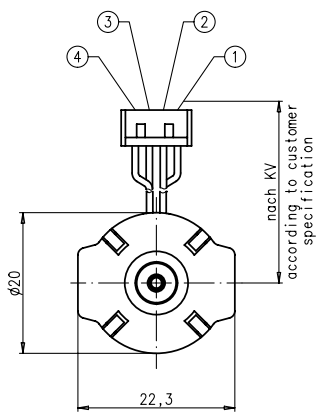

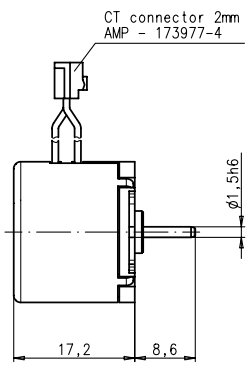

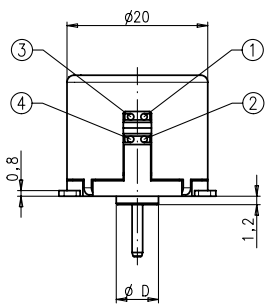

motortype	∅ D
UAT33	∅8 0 -0,05
UAT3E	∅6 0 -0,05

UCM

UCM1/7

Dimensions (mm)	∅ 28 x 24
Voltage (V) *	12–230
Speed (rpm) 50 Hz	250
Pole number	24
Running torque ** (cNm) 50 Hz	1,2–1,3
60 Hz	1,2–1,3
Power output (W) ** 50 Hz	0,31–0,34
60 Hz	0,38–0,41
Gear combination	on request

* regard circuit diagram and connector type
** values for lead wire version (connection N) / connector versions up to 15 % higher

Standard Data

Climatic class	„wide-spread“ according to DIN IEC 60721-2-1
Ambient temperature operation	°C -15 ... +60
Ambient temperature storage	°C -20 ... +100
Thermal resistance at f=0 R_{therm}	29 K/W
Thermal class	B according to DIN EN 60085
Approval	standard
Mounting	any position
Electrical connection	connector type D or N
Protection	IP 30 according to DIN EN 60529
Weight	54 g
Rotor stalling	motor can be stopped when voltage is applied, without being overheated
Bearings	Sintered bronze, self- lubricating

Order Reference

Type	Synchronous Motor					UCM	1	0	N	24 V / 50 Hz	R	D
Configuration	1	standard magnet										
	7	stronger magnet										
Rotor shaft, mounting	3	centring 8 mm, shaft 2,0 mm, screw plate	E	centring 10 mm, shaft 2,0 mm, screw plate								
	4	centring 8 mm, shaft 1,5 mm, screw plate	K	centring 10 mm, shaft 1,5 mm, screw plate								
	0	centring 8 mm, shaft 2,0 mm, clip	A	centring 10 mm, shaft 2,0 mm, clip								
	1	centring 8 mm, shaft 1,5 mm, clip	C	centring 10 mm, shaft 1,5 mm, clip								
Approvel	N	Approval Standard										
Voltage/Frequency		see next pages										
Direction	R	reversible										
Connection	D	see next pages „Connection Types“										
	N											

Technical Data

			UCM1	UCM1	UCM7	UCM7	
bipolar	Rated frequency	Hz	50	60	50	60	
	Speed n	rpm	250	300	250	300	
	Running torque *	cNm	1,2	1,2	1,3	1,3	
	Detent torque M_S	cNm	0,18		0,18	0,36	0,36
	Power output *	W	0,31		0,38	0,34	0,41
	Power consumption	VA	2,2	2,2	2,2	2,2	
	Rotor inertia J_R	gcm2	2,2	2,2	2,4	2,4	
	Tolerance of voltage		standard power supply system +10%/–10%				
	Duty cycle		100%				
	Winding temperature T_{max}	°C	130				
	Direction of rotation		reversible				

Capacitors	Rated voltage U_N	V	12	24	110
	Operating capacitor C_{50}	µF/V~	18/20	4,7/40	0,33/200

* values for lead wire version (connection N) / connector versions up to 15 % higher

Circuit diagram

Parallel circuit 12 V, 24 V, 48 V, 110 V

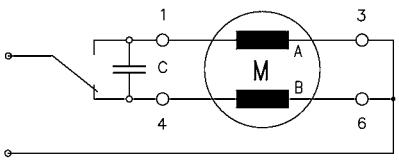

Parallel circuit 230 V (only for connector N)
with 110 V motor and resistor R_V

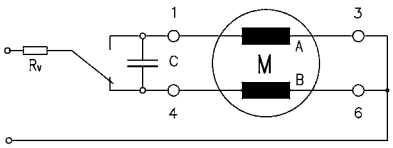

Parallel circuit 230 V (only for connector N)
with 110 V motor and capacitor C_V

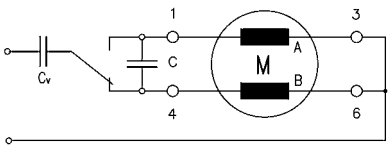

switch to

1 clockwise rotation

4 counter clockwise rotation

6 counter clockwise rotation
(for series circuit)

Series resistor R_V = 5,6 kΩ, 3 W
Series capacitor C_V = 0,33 µF, 250 VAC

UCM

Dimensions

Version with Connector D

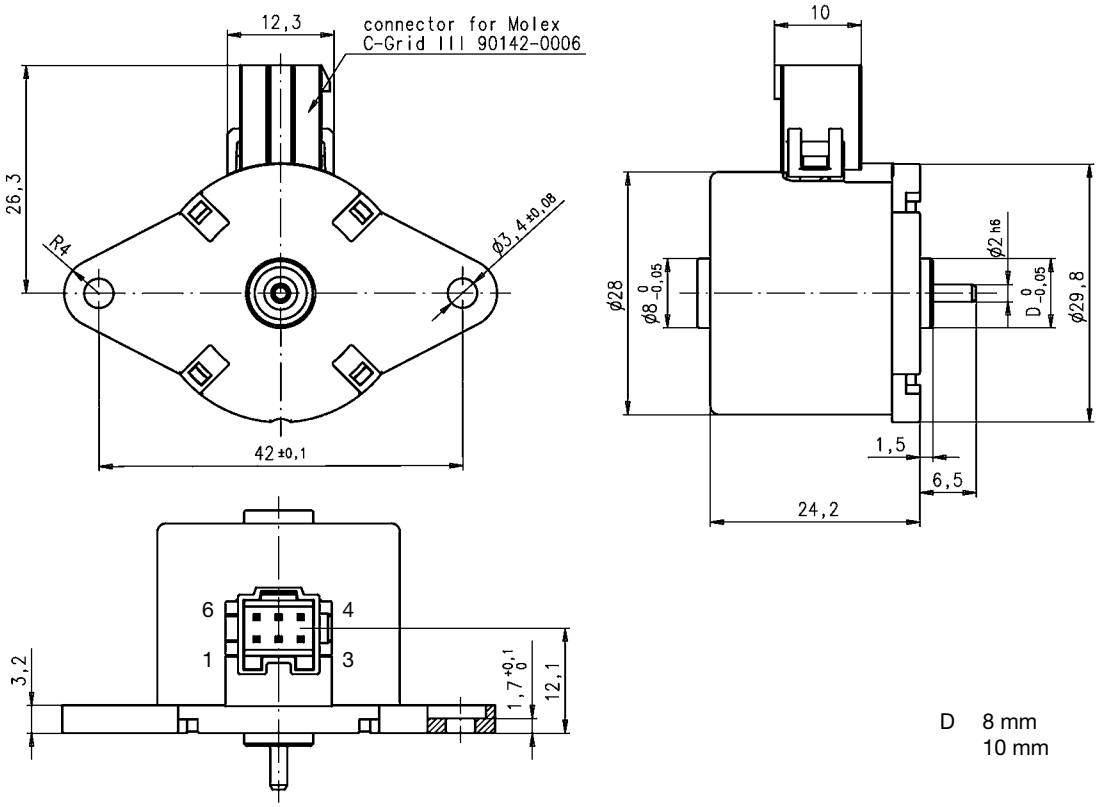

D 8 mm
10 mm

Version with Connector N

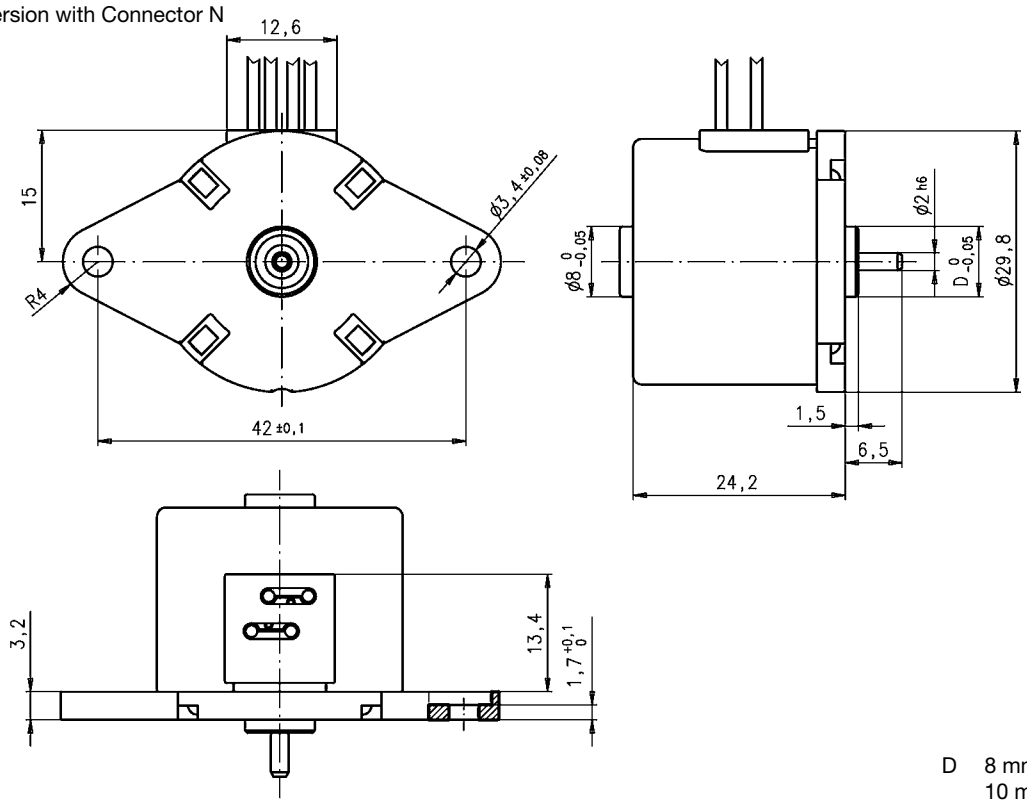

D 8 mm
10 mm

UCR1/7

Dimensions (mm)	∅ 28 x 24
Voltage (V) *	12–230
Speed (rpm) 50 Hz	500
Pole number	12
Running torque ** (cNm) 50 Hz	0,8–1,1
60 Hz	0,8–1,1
Power output (W) ** 50 Hz	0,42–0,58
60 Hz	0,50–0,69
Gear combination	on request

* regard circuit diagram and connector type
** values for lead wire version (connection N) / connector versions up to 15 % higher

Standard Data

Climatic class	wide-spread according to DIN IEC 60721-2-1
Ambient temperature operation	°C -15 ... +60
Ambient temperature storage	°C -20 ... +100
Thermal resistance at f=0 R_{therm}	29 K/W
Thermal class	B according to DIN EN 60085
Approval	standard
Mounting	any position
Electrical connection	connector type D or N
Protection	IP 30 according to DIN EN 60529
Weight	54 g
Rotor stalling	motor can be stopped when voltage is applied, without being overheated
Bearings	Sintered bronze, self- lubricating

Order Reference

Type	Synchronous Motor			UCR	1	0	N	24 V / 50 Hz	R	D	
Configuration	1	standard magnet									
	7	stronger magnet									
Rotor shaft, mounting	3	centring 8 mm, shaft 2,0 mm, screw plate	E	centring 10 mm, shaft 2,0 mm, screw plate							
	4	centring 8 mm, shaft 1,5 mm, screw plate	K	centring 10 mm, shaft 1,5 mm, screw plate							
	0	centring 8 mm, shaft 2,0 mm, clip	A	centring 10 mm, shaft 2,0 mm, clip							
	1	centring 8 mm, shaft 1,5 mm, clip	C	centring 10 mm, shaft 1,5 mm, clip							
Approvel	N	Approval Standard									
Voltage/Frequency		see next pages									
Direction	R	reversible									
Connection	D	see next pages „Connection Types“									
	N	Cable									

UCR

Technical Data

			UCR1	UCR1	UCR7	UCR7	
bipolar	Rated frequency	Hz	50	60	50	60	
	Speed n	rpm	500	600	500	600	
	Running torque *	cNm	0,8	0,8	1,1	1,1	
	Detent torque M_S	cNm	0,18		0,18	0,4	0,4
	Power output *	W	0,42		0,50	0,58	0,69
	Power consumption	VA	2,2	2,2	2,2	2,2	
	Rotor inertia J_R	gcm2	2,1		2,1	2,4	2,4
	Tolerance of voltage		standard power supply system +10%/–10%				
	Duty cycle		100%				
	Winding temperature T_{max}	°C	130				
	Direction of rotation		reversible				
Capacitors	Rated voltage U_N	V	12	24	110		
	Operating capacitor C_{50}	µF/V~	22/20	5,6/40	0,27/200		

* values for lead wire version (connection N) / connector versions up to 15 % higher

Circuit diagram

Parallel circuit 12 V, 24 V, 48 V, 110 V

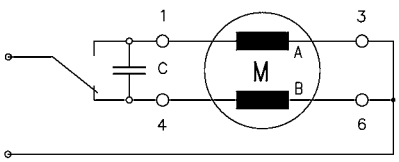

Parallel circuit 230 V (only for connector N)
with 110 V motor and resistor R_V

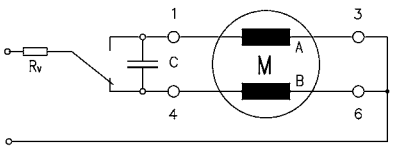

switch to

1 clockwise rotation

4 counter clockwise rotation

6 counter clockwise rotation
(for series circuit)

Parallel circuit 230 V (only for connector N)
with 110 V motor and capacitor C_V

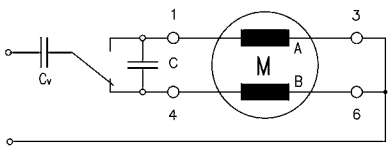

Series resistor R_V = 5,6 kΩ, 3 W
Series capacitor C_V = 0,33 µF, 250 VAC

Dimensions Version with Connector D

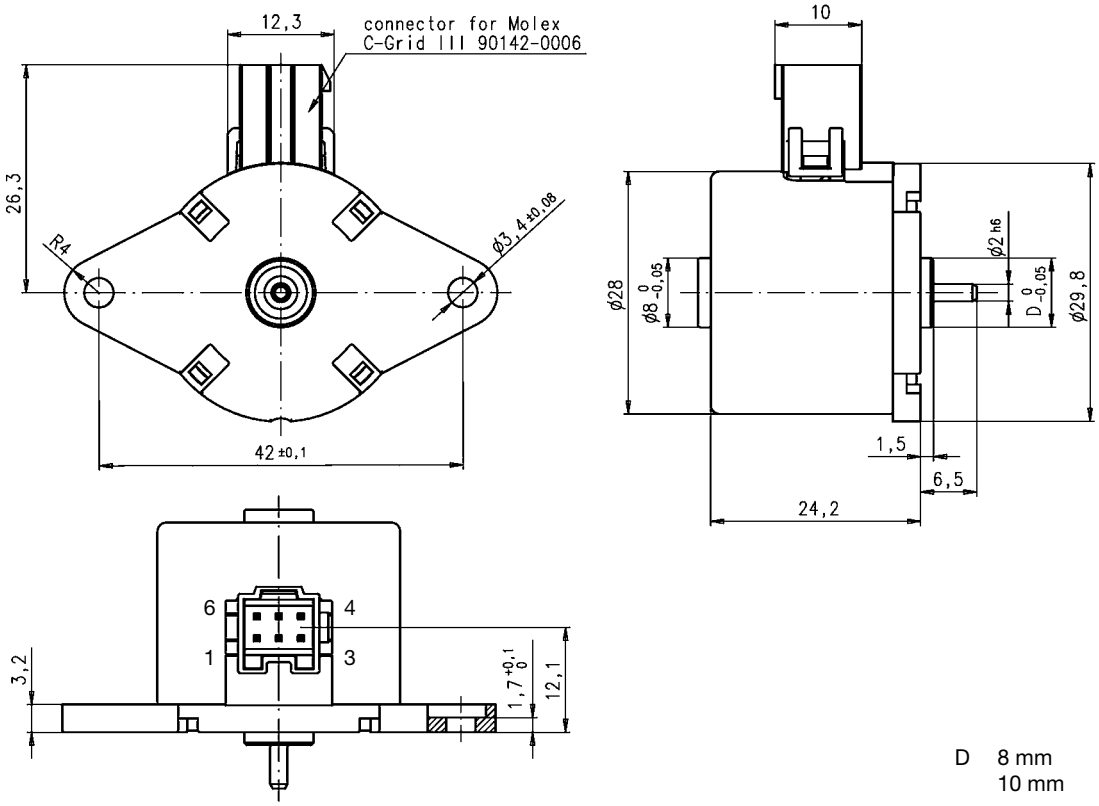

D 8 mm
10 mm

Version with Connector N

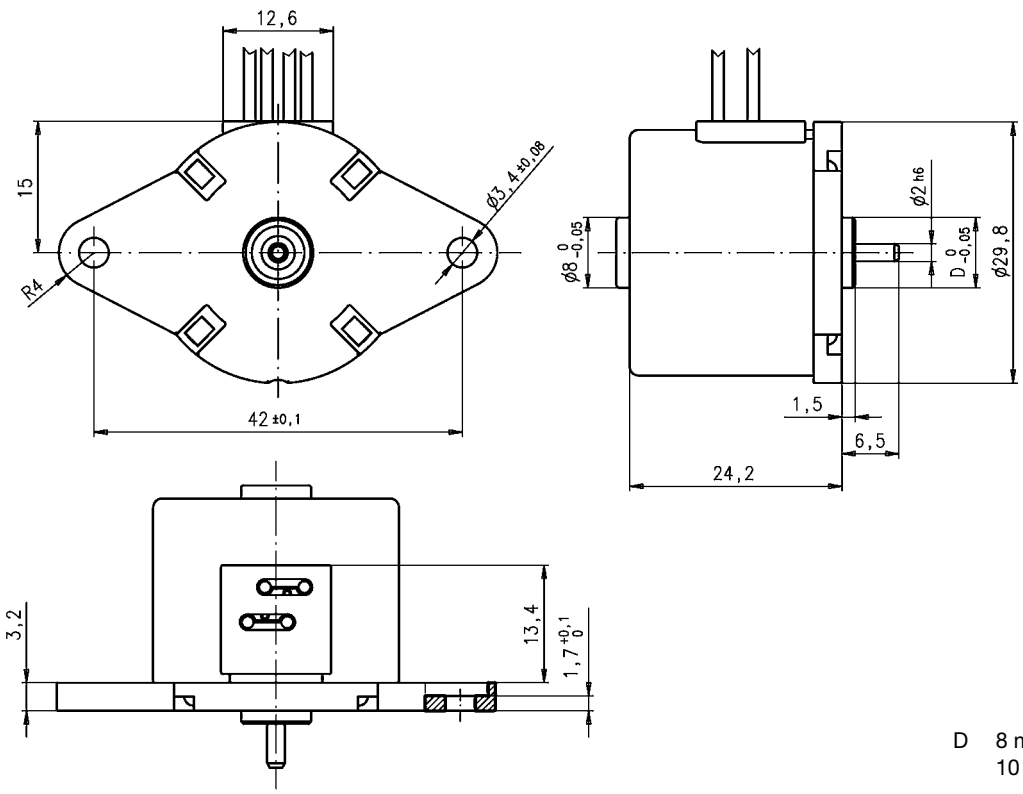

D 8 mm
10 mm

UBR1

UBR1

Dimensions (mm)	∅ 36 x 21
Voltage (V)	12–230
Speed (rpm) 50 Hz	250
60 Hz	300
Pole number	24
Running torque (cNm) 50 Hz	0,9
60 Hz	0,9
Power output (W) 50 Hz	0,24
60 Hz	0,28
Gear combination	A, D, M, B, F, V, J

Standard Data

Climatic class	wide-spread according to DIN IEC 60721-2-1
Ambient temperature operation	°C -15...+55
Ambient temperature storage	°C -20...+100
Thermal resistance at f=0 R_{therm}	27 K/W
Thermal class	A according to DIN EN 60085
Approval	standard (UL/CSA on request)
Mounting	any position
Electrical connection	cable
Protection	IP 40 according to DIN EN 60529
Weight	60 g
Rotor stalling	motor can be stopped when voltage is applied, without being overheated
Bearings	sintered bronze, self-lubricating
Electric strength	according to DIN EN 60034-1/DIN EN 60335-1

Order Reference

Type	Synchronous Motor						UBR1	0	N	24 V/50 Hz	R	E
Rotor shaft, mounting	0	centring 8 mm, shaft 2,0 mm, clip	A	centring 10 mm, shaft 2,0 mm, clip								
	1	centring 8 mm, shaft 1,5 mm, clip	C	centring 10 mm, shaft 1,5 mm, clip								
	3	centring 8 mm, shaft 2,0 mm, screw plate	E	centring 10 mm, shaft 2,0 mm, screw plate								
	4	centring 8 mm, shaft 1,5 mm, screw plate	K	centring 10 mm, shaft 1,5 mm, screw plate								
Approval	N	Approval Standard										
Voltage/Frequency		See next page										
Direction		reversible										
Cable	E	cable 150 mm (other on request)										

Technical Data

Rated frequency		Hz	50	60			
	Speed n	rpm	250	300			
	Power consumption	W	1,3	1,3			
	Power output	W	0,24	0,28			
	Running torque	cNm	0,9	0,9			
	Rotor inertia J_R	gcm^2	2,8				
	Detent torque M_S	cNm	0,22				
	Tolerance of voltage		standard power supply system + 10% / - 10%				
	Duty cycle		100%				
	Winding temperature T_{max}	°C	105				
	Direction of rotation		reversible				
Capacitors	Rated voltage U_N	V	12	24	48	110	230
	Operation capacitor C_{50}	µF/VAC	12/20	3,3/40	0,82/200	0,15/200	0,22/200
	Operation capacitor C_{60}	µF/VAC	12/20	3,3/40	0,82/200	0,15/200	0,12/200

Circuit diagram

Parallel circuit 12V, 24V, 48V, 110V

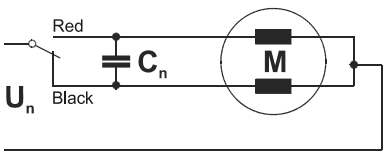

Parallel circuit 230V

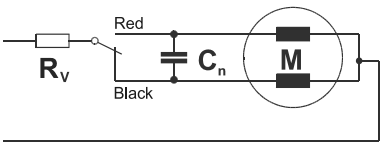

Series circuit 230V

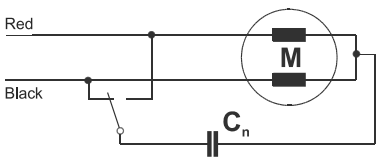

Parallel circuit 230V

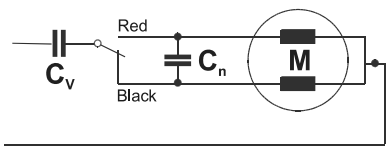

Red = clockwise rotation
Black = counter clockwise rotation

Dimensions

Mounting with screw plate

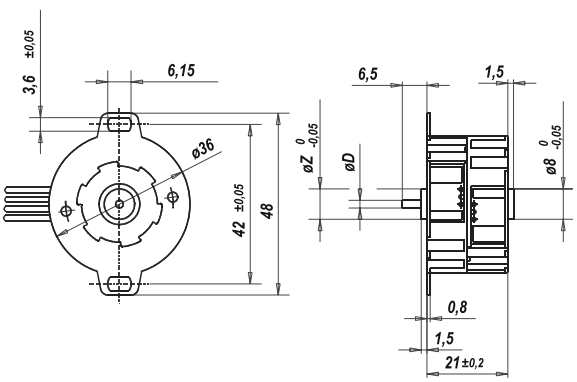

Mounting with snap on clip

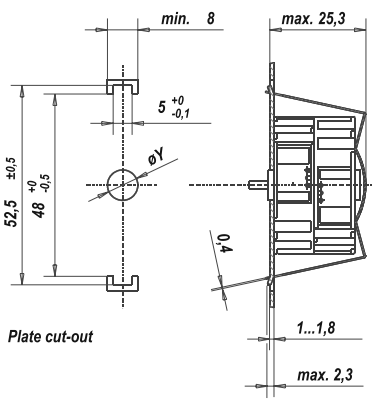

øD Rotor shaft
ø 2 h6
ø 1.5 js8

øZ	øY
8	8F8
10	10F8

UBR2

UBR2

Dimensions (mm)	∅ 36 x 21
Voltage (V)	12–230
Speed (rpm) 50 Hz 60 Hz	500 600
Pole number	12
Running torque (cNm) 50 Hz 60 Hz	0,75 0,72
Power output (W) 50 Hz 60 Hz	0,39 0,45
Gear combination	A, D, M, B, F, V, J

Standard Data

Climatic class	wide-spread according to DIN IEC 60721-2-1
Ambient temperature operation	°C -15...+55
Ambient temperature storage	°C -20...+100
Thermal resistance at f=0 R_{therm}	27 K/W
Thermal class	A according to DIN EN 60085
Approval	standard (UL/CSA on request)
Mounting	any position
Electrical connection	cable
Protection	IP 40 according to DIN EN 60529
Weight	60 g
Rotor stalling	motor can be stopped when voltage is applied, without being overheated
Bearings	sintered bronze, self-lubricating
Electric strength	according to DIN EN 60034-1/DIN EN 60335-1

Order Reference

Type	Synchronous Motor						UBR2	0	N	24 V/50 Hz	R	E
Rotor shaft, mounting	0	centring 8 mm, shaft 2,0 mm, clip		A	centring 10 mm, shaft 2,0 mm, clip							
	1	centring 8 mm, shaft 1,5 mm, clip		C	centring 10 mm, shaft 1,5 mm, clip							
	3	centring 8 mm, shaft 2,0 mm, screw plate		E	centring 10 mm, shaft 2,0 mm, screw plate							
	4	centring 8 mm, shaft 1,5 mm, screw plate		K	centring 10 mm, shaft 1,5 mm, screw plate							
Approval	N	Approval Standard										
Voltage/Frequency		See next page										
Direction		reversible										
Cable	E	cable 150 mm (other on request)										

Technical Data

Rated frequency		Hz	50	60			
	Speed n	rpm	500	600			
	Power consumption	W	1,6	1,6			
	Power output	W	0,39	0,45			
	Running torque	cNm	0,75	0,72			
	Rotor inertia J_R	gcm^2	2,8				
	Detent torque M_S	cNm	0,25				
	Tolerance of voltage		standard power supply system + 10% / - 10%				
	Duty cycle		100%				
	Winding temperature T_{max}	°C	105				
	Direction of rotation		reversible				
Capacitors	Rated voltage U_N	V	12	24	48	110	230
	Operation capacitor C_{50}	µF/VAC	15/20	3,9/40	1,0/70	0,18/170	0,27/170
	Operation capacitor C_{60}	µF/VAC	15/20	3,9/40	1,0/70	0,18/170	0,22/170

Circuit diagram

Parallel circuit 12V, 24V, 48V, 110V

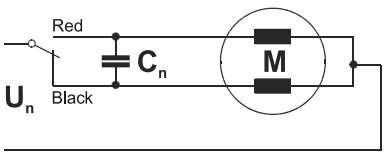

Parallel circuit 230V

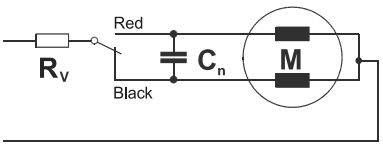

Series circuit 230V

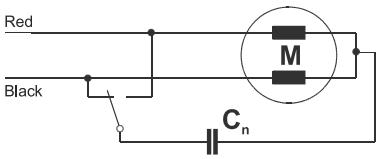

Parallel circuit 230V

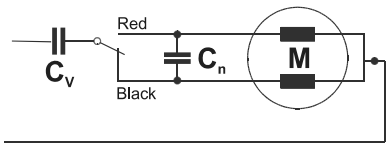

Red = clockwise rotation
Black = counter clockwise rotation

Dimensions

Mounting with screw plate

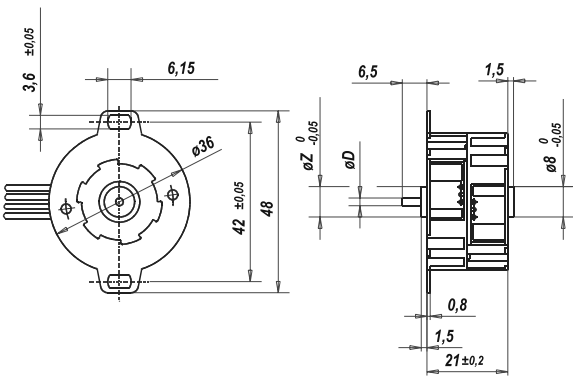

Mounting with snap on clip

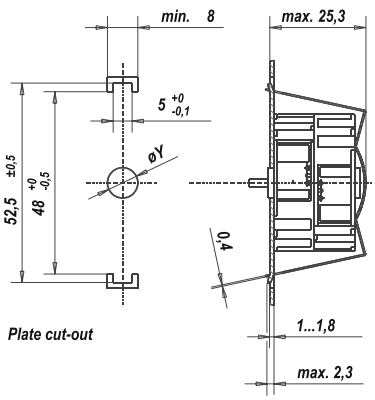

Plate cut-out

øD Rotor shaft	
ø 2 h6	
ø 1.5 js8	
øZ	*øY*
8	*8F8*
10	*10F8*

UDR

UDR1

Dimensions (mm)	∅ 48 x 24
Voltage (V)	12–230
Speed (rpm) 50 Hz	500
60 Hz	600
Pole number	12
Running torque (cNm) 50 Hz	1,5
60 Hz	1,4
Power output (W) 50 Hz	0,77
60 Hz	0,87
Gear combination	A, D, M, B, F, V, J

Standard Data

Climatic class	wide-spread according to DIN IEC 60721-2-1
Ambient temperature operation	°C -15...+60
Ambient temperature storage	°C -20...+100
Thermal resistance at f=0 R_{therm}	18 K/W
Thermal class	A according to DIN EN 60085
Approval	standard/UL/CSA
Mounting	any position
Electrical connection	cable
Protection	IP 40 according to DIN EN 60529
Weight	132 g
Rotor stalling	motor can be stopped when voltage is applied, without being overheated
Bearings	sintered bronze, self-lubricating
Electric strength	according to DIN EN 60034-1/DIN EN 60335-1

Order Reference

Type	Synchronous Motor	UDR1	0	N	24 V/50 Hz	R	N	
Rotor shaft, mounting	0 centring 8 mm, shaft 1,5 mm, clip 1 centring 8 mm, shaft 2,0 mm, clip							
Approval	N Approval Standard U Approval UL/CSA							
Voltage/Frequency	See next page							
Direction	reversible							
Cable	N cable 150 mm (other on request)							

Technical Data

Rated frequency		Hz	50	60			
	Speed n	rpm	500	600			
	Power consumption	W	2,1	2,2			
	Power output	W	0,77	0,87			
	Running torque	cNm	1,5	1,4			
	Rotor inertia J_R	gcm^2	6,3				
	Detent torque M_S	cNm	0,35				
	Tolerance of voltage		standard power supply system + 10% / - 10%				
	Duty cycle		100 %				
	Winding temperature T_{max}	°C	105				
	Direction of rotation		reversible				
Capacitors	Rated voltage U_N	V	12	24	48	110	230
	Operation capacitor C_{50}	µF/VAC	27/20	6,8/40	1,5/100	0,27/200	0,068/350
	Operation capacitor C_{60}	µF/VAC	22/20	4,7/40	1,5/100	0,27/200	0,068/350

Circuit diagram Parallel circuit

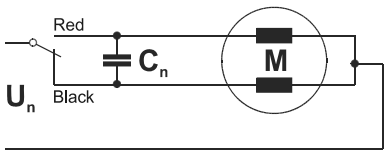

Red = clockwise rotation
Black = counter clockwise rotation

Dimensions

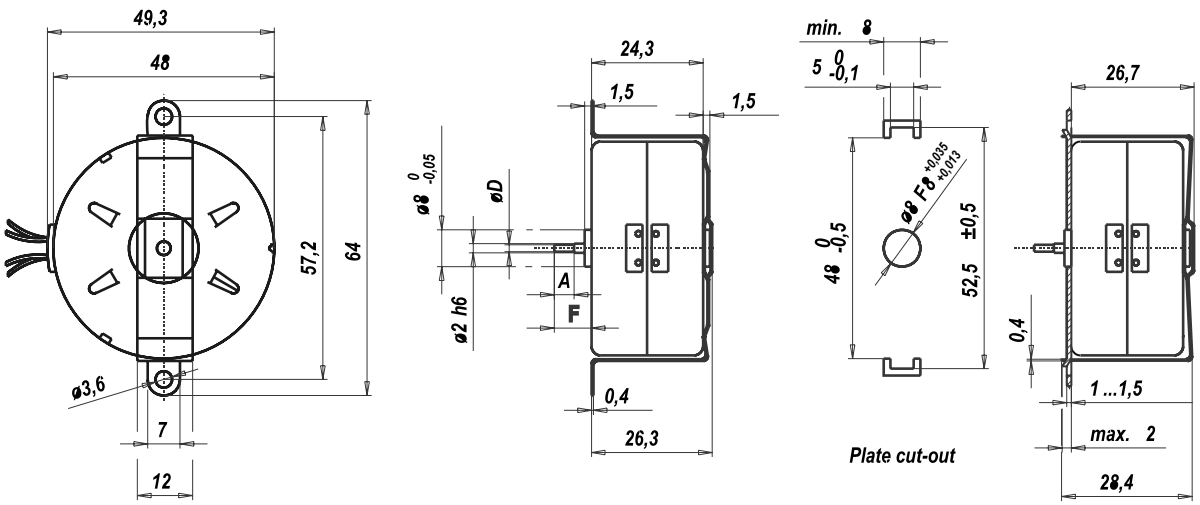

øD Rotor shaft	
ø 1.5 js8 $^{+0,007}_{-0,007}$	
ø 2 h6 $^{0}_{-0,006}$	
Dimension A	**Dimension F**
4,3	6,5
—	8,2

UDS

UDS1

Dimensions (mm)	∅ 48 x 18,5
Voltage (V)	6–230
Speed (rpm) 50 Hz	500
60 Hz	600
Pole number	12
Running torque (cNm) 50 Hz	0,9
60 Hz	0,8
Power output (W) 50 Hz	0,5
60 Hz	0,5
Gear combination	A, D, M, B, F, V, J

Standard Data

Climatic class	wide-spread according to DIN IEC 60721-2-1
Ambient temperature operation	°C -15...+60
Ambient temperature storage	°C -20...+100
Thermal resistance at f=0 R_{therm}	17 K/W
Thermal class	A according to DIN EN 60085
Approval	standard/UL/CSA
Mounting	any position
Electrical connection	cable
Protection	IP 40 according to DIN EN 60529
Weight	102 g
Rotor stalling	motor can be stopped when voltage is applied, without being overheated
Bearings	plastic, self-lubricating
Electric strength	according to DIN EN 60034-1/DIN EN 60335-1

Order Reference

Type	Synchronous Motor	UDS1	0	N	24 V/50 Hz	R	N
Rotor shaft, mounting	0 centring 8 mm, shaft 1,5 mm, clip 1 centring 8 mm, shaft 2,0 mm, clip						
Approval	N Approval Standard U Approval UL/CSA						
Voltage/Frequency	See next page						
Direction	R clockwise rotation L Counter-clockwise rotation						
Cable	N cable 150 mm (other on request)						

Technical Data

Rated frequency	Hz	50	60
Speed n	rpm	500	600
Power consumption	W	2,4	1,8
Power output	W	0,5	0,5
Running torque	cNm	0,9	0,8
Rated voltage U_N	V	6, 12, 24, 48, 110, 230	
Rotor inertia J_R	gcm^2	11	
Detent torque M_S	cNm	0,27 (in direction of rotation)	
Tolerance of voltage		standard power supply system + 10% / - 10%	
Duty cycle		100 %	
Winding temperature T_{max}	°C	105	
Direction of rotation		clockwise or counter-clockwise	

Dimensions

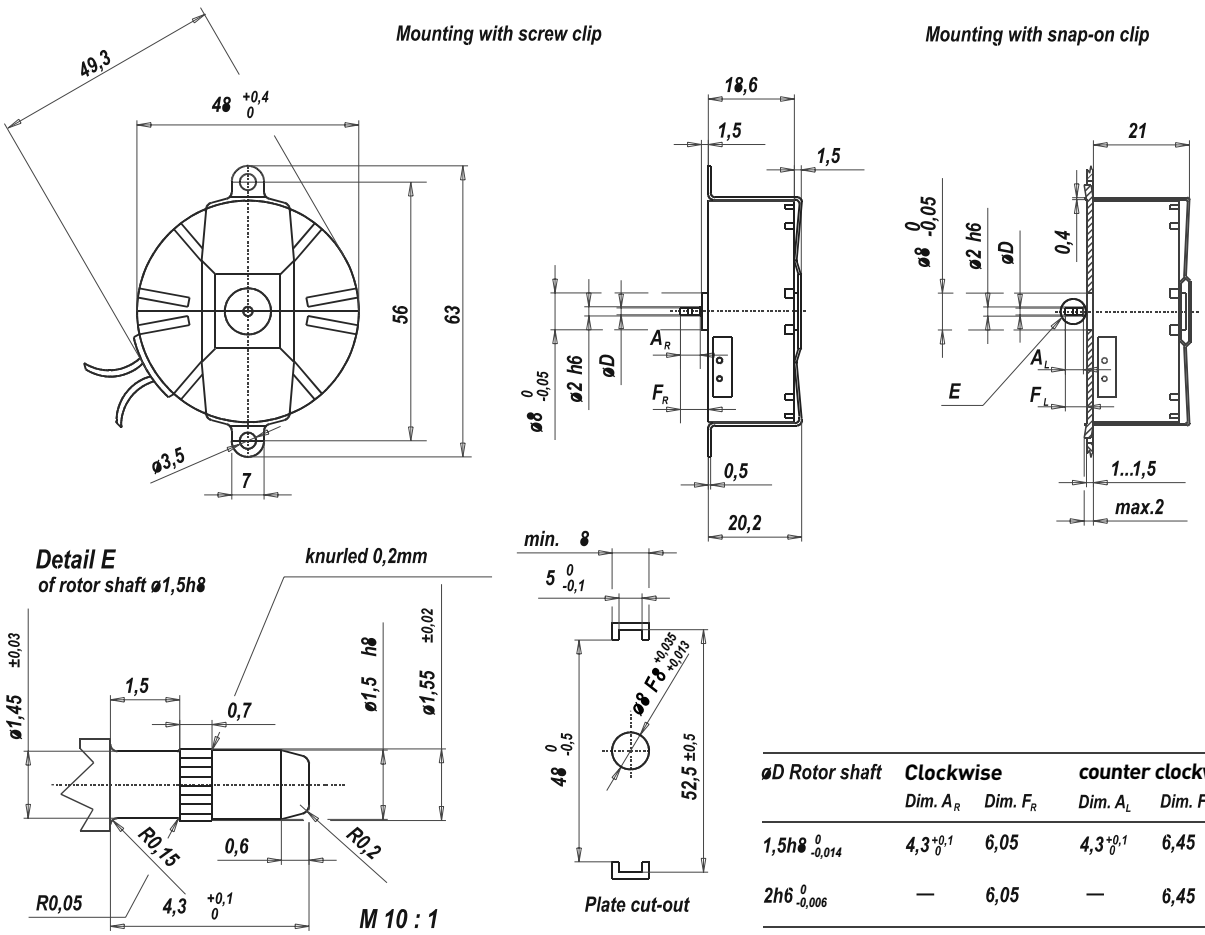

øD Rotor shaft	Clockwise		counter clockwise	
	Dim. A_R	Dim. F_R	Dim. A_L	Dim. F_L
1,5h8 $^{0}_{-0,014}$	$4,3^{+0,1}_{0}$	6,05	$4,3^{+0,1}_{0}$	6,45
2h6 $^{0}_{-0,006}$	—	6,05	—	6,45

UO

UO (SM5021; SM5022)

Dimensions (mm)	∅ 50 x 21
Voltage (V)	6–230
Speed (rpm) 50 Hz 60 Hz	250/375/500 300/450/600
Pole number	24/16/12
Running torque (cNm) 50 Hz 60 Hz	2,0–3,3 (SM5021); 3,3–7,5 (SM5022) 1,8–3 (SM5021); 4,5–7,0 (SM5022)
Power output (W) 50 Hz 60 Hz	0,65–2,75 (SM5021); 1,3–2,73 (SM5022) 0,78–3,0 (SM5021); 1,8–2,83 (SM5022)
Gear combination	VK4, O, P, R

SM5021

SM5022

Standard Data

Climatic class	wide-spread according to DIN IEC 60721-2-1
Ambient temperature operation	°C -15 ... +40
Ambient temperature storage	°C -20 ... +100
Thermal class	B (SM5021) ; A (SM5022) according to DIN EN 60085
Approval	standard
Mounting	any position
Electrical connection	cable
Protection	IP 30 according to DIN EN 60529
Weight	170 ... 180 g (SM5021); 180 ... 195 g (SM5022)
Rotor stalling	motor can be stopped when voltage is applied, without being overheated
Bearings	Sintered bronze, self- lubricating

Order Reference

Type	Synchronous Motor	SM5021 R / SM5022 R	250	24 V	50 Hz
rpm	250 375 500				
Voltage	24 V 110 V 230 V				
Frequency	50 Hz 60 Hz 50/60 Hz				

Technical Data

Motor type (SM5021)			R-250/1	R250/1	R-500/1	R-500/1	R-375/1	R-375/1	R-375/2	R-375/2
	Rated frequency	Hz	50	60	50	60	50	60	50	60
	Speed of rotation	rpm	250	300	500	600	375	450	375	450
	Running torque M_n	cNm	2,5	2,5	2	1,8	2,3	2	3,3	3
	Power output	W	0,65	0,78	1	1,1	0,9	0,95	1,3	1,4
	Power consumption	VA	3,86	4,37	4,37	4,83	4,2	4,6	6	6,7
	Nominal current at 230 V	mA	16,8	19	19	21	18,3	20	26	29
	Max. permissible ext. inertia	gcm^2	30	10	10	10	15	10	10	10
	Detent torque M_s	cNm	0,25	0,25	0,25	0,25	0,25	0,25	0,25	0,25
	Winding temperature increase	K	55	60	63	70	60	65	80	85
	Weight	g	180	180	170	170	180	180	180	180
Capacitors	at U_N: 24 V	µF/V~	10/63	10/63	10/63	10/63	10/63	10/63	15/63	15/63
	at U_N: 110 V	µF/V~	0,47/250	0,47/250	0,47/250	0,47/250	0,47/250	0,47/250	0,75/250	0,75/250
	at U_N: 230 V	µF/V~	0,12/500	0,12/500	0,12/500	0,12/500	0,12/500	0,12/500	0,18/500	0,18/500

Motor type (SM5022)			R-250/1	R-250/1	R-250/S2	R-250/S2	R-375/1	R-375/1	R-375/S2	R-375/S2
	Rated frequency	Hz	50	60	50	60	50	60	50	60
	Speed of rotation	rpm	250	300	250	300	375	450	375	450
	Running torque M_n	cNm	6	5,7	7,5	7	4,7	4,5	7	6,5
	Power output	W	1,57	1,8	2	2,2	1,85	2,1	2,7	3
	Power consumption	VA	6,1	6,6	9	9,7	6,45	6,9	9,2	10,4
	Nominal current at 230 V	mA	26,5	28,7	39,1	42,2	28	30	40	45
	Max. permissible ext. inertia	gcm^2	50	20	60	30	60	40	20	40
	Detent torque M_s	cNm	1	1	1	1	1	1	1	1
	Winding temperature increase	K	85	90	60 (S2 10 min.)		85	90	60 (S2 10 min.)	
	Weight	g	195	195	195	195	195	195	195	195
Capacitors	at U_N: 24 V	µF/V~	15/63	15/63	25/63	25/63	15/63	15/63	25/63	25/63
	at U_N: 110 V	µF/V~	0,75/250	0,75/250	1,2/250	1,2/250	0,75/250	0,75/250	1,2/250	1,2/250
	at U_N: 230 V	µF/V~	0,18/500	0,18/500	0,27/500	0,27/500	0,18/500	0,18/500	0,27/500	0,27/500

Motor type			R-500	R-500	R-500/S2	R-500/S2
	Rated frequency	Hz	50	60	50	60
	Speed of rotation	rpm	500	600	500	600
	Running torque M_n	cNm	3,7	3,2	5,2	4,5
	Power output	W	1,94	2	2,73	2,83
	Power consumption	VA	6,21	6,67	8,85	9,2
	Nominal current at 230 V	mA	27	29	38,5	40
	Max. permissible ext. inertia	gcm^2	35	15	45	25
	Detent torque M_s	cNm	1	1	1	1
	Winding temperature increase	K	85	90	55 (S2 10 min.)	
	Weight	g	195	195	195	195
Capacitors	at U_N: 24 V	µF/V~	15/63	15/63	25/63	25/63
	at U_N: 110 V	µF/V~	0,75/250	0,75/250	1,2/250	1,2/250
	at U_N: 230 V	µF/V~	0,18/500	0,18/500	0,27/500	0,27/500

UO

Circuit diagram Parallel circuit

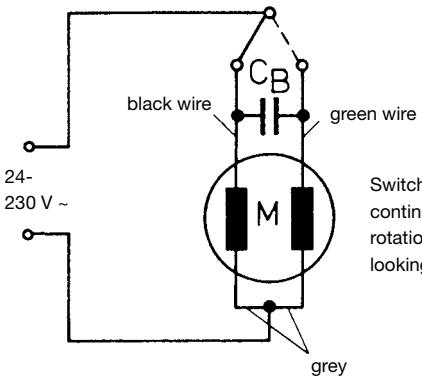

Switch position drawn with a continuous line results in clockwise rotation as viewed when looking at the motor shaft.

Dimensions

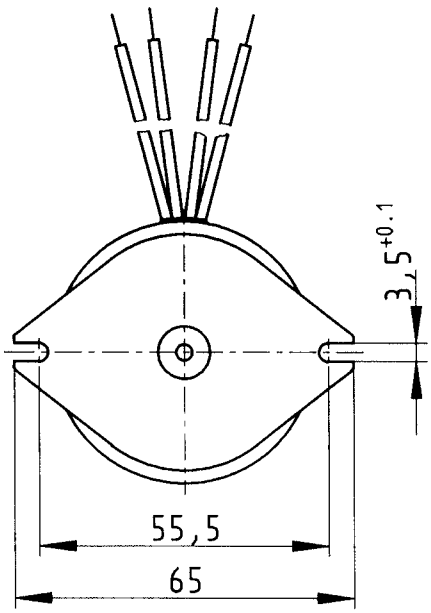

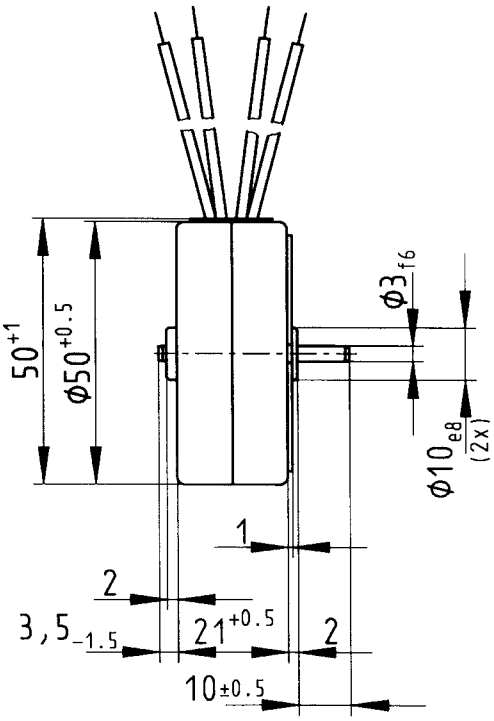

Standard - wire length: 200 mm / 4 mm stripped
General tolerances acc. to DIN ISO 2768-mk

Chart: Torque versus voltage

UOM1 (SM 5021 R-250/1)

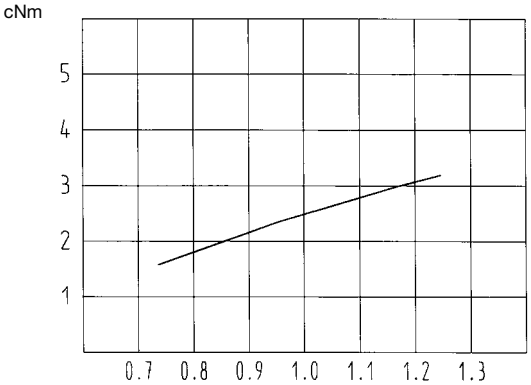

Supply voltage / Nominal voltage

UOR1 (SM 5021 R-500/1)

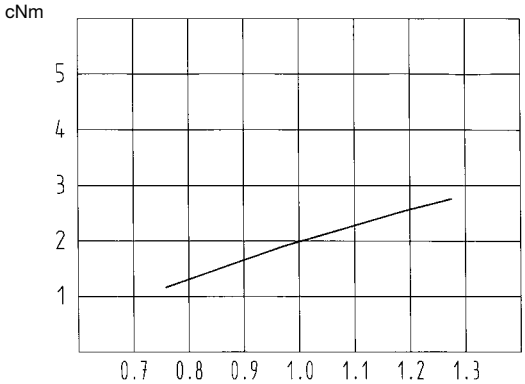

Supply voltage / Nominal voltage

UOU1 (SM 5021 R-375/1)

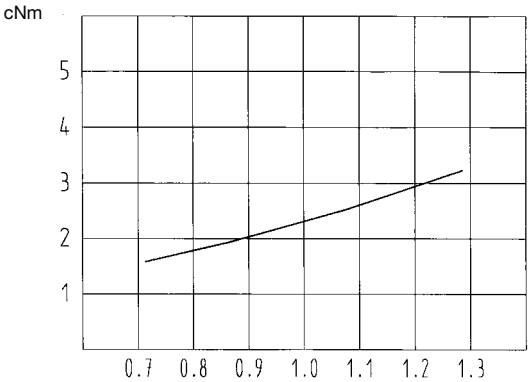

Supply voltage / Nominal voltage

UOU1 (SM 5021 R-375/2)

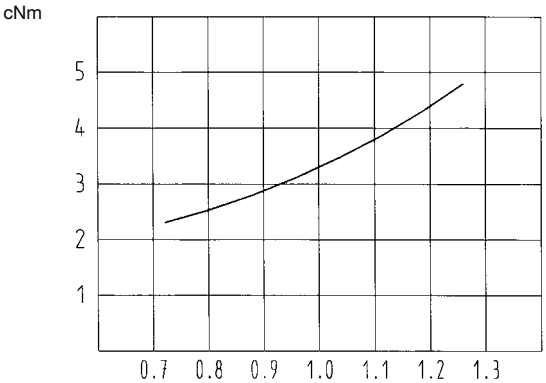

Supply voltage / Nominal voltage

Chart: Torque versus voltage

UOM5 (SM 5022 R-250)

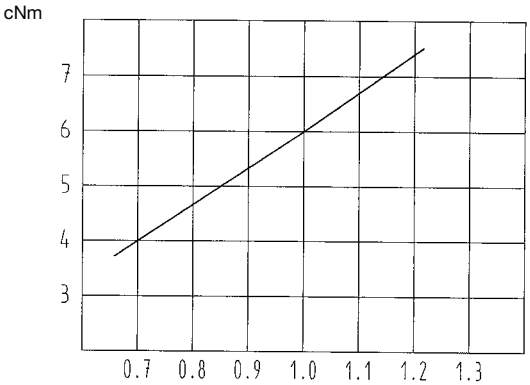

Supply voltage / Nominal voltage

UOM5 (SM 5022 R-250/S2)

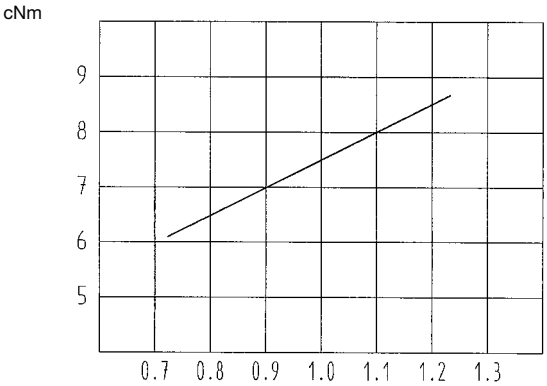

Supply voltage / Nominal voltage

UOU5 (SM 5022 R-375)

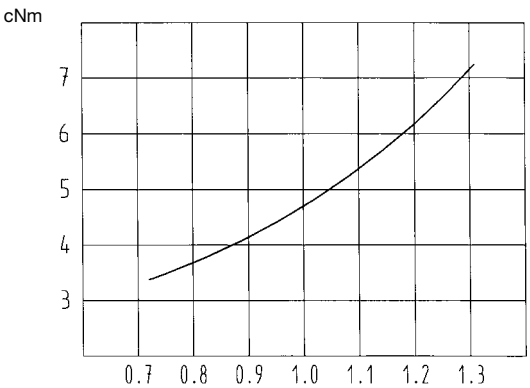

Supply voltage / Nominal voltage

UOU5 (SM 5022 R-375/S2)

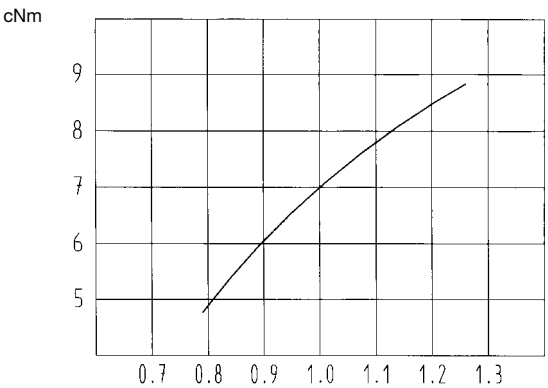

Supply voltage / Nominal voltage

UOR5 (SM 5022 R-500)

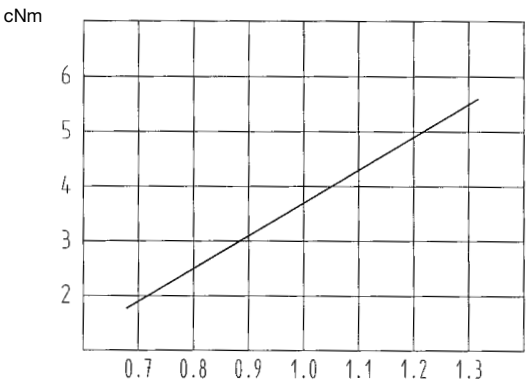

Supply voltage / Nominal voltage

UOR5 (SM 5022 R-500/S2)

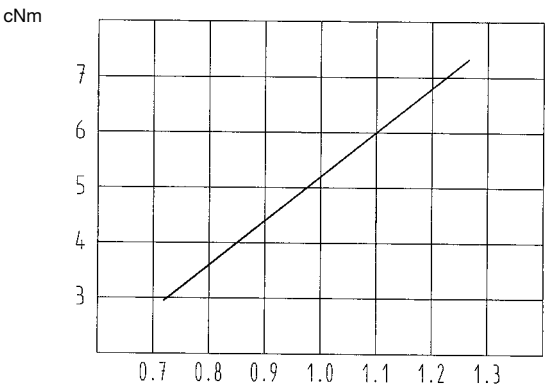

Supply voltage / Nominal voltage

UFM1

Dimensions (mm)	∅ 52 x 28
Voltage (V)	12–230
Speed (rpm) 50 Hz	250
60 Hz	300
Pole number	24
Running torque (cNm)	
50 Hz	3,8
60 Hz	3,5
Power output (W)	
50 Hz	1
60 Hz	1,1
Gear combination	A, D, M, B, F, V, J, O

Standard Data

Climatic class	wide-spread according to DIN IEC 60721-2-1
Ambient temperature operation	°C -15...+55
Ambient temperature storage	°C -20...+100
Thermal resistance at f=0 R_{therm}	13 K/W
Thermal class	A according to DIN EN 60085 (B on request)
Approval	standard (UL/CSA on request)
Mounting	any position
Electrical connection	cable
Protection	IP 30 according to DIN EN 60529
Weight	180 g
Rotor stalling	motor can be stopped when voltage is applied, without being overheated
Bearings	sintered bronze, self-lubricating
Electric strength	according to DIN EN 60034-1/DIN EN 60335-1

Order Reference

Type	Synchronous Motor					UFM1	0	N	24 V/50 Hz	R	N
Rotor shaft, mounting	0	centring 8 mm, shaft 3,0 mm, clip	E	centring 10 mm, shaft 3,0 mm, screw plate							
	1	centring 8 mm, shaft 2,0 mm, clip	K	centring 10 mm, shaft 2,0 mm, screw plate							
	2	centring 8 mm, shaft 1,5 mm, clip	M	centring 10 mm, shaft 1,5 mm, screw plate							
	3	centring 8 mm, shaft 3,0 mm, screw plate									
	4	centring 8 mm, shaft 2,0 mm, screw plate									
	5	centring 8 mm, shaft 1,5 mm, screw plate									
Approval	N	Approval Standard									
Voltage/Frequency		See next page									
Direction		reversible									
Cable	N	cable 150 mm (other on request)									

UFM

Technical Data

Rated frequency		Hz	50	60			
	Speed n	rpm	250	300			
	Power consumption	W	4	3,1			
	Power output	W	1	1,1			
	Running torque	cNm	3,8	3,5			
	Rotor inertia J_R	gcm^2	14,4				
	Detent torque M_S	cNm	0,45				
	Tolerance of voltage		standard power supply system + 10% / - 10%				
	Duty cycle		100%				
	Winding temperature T_{max}	°C	105				
	Direction of rotation		reversible				
Capacitors	Rated voltage U_N	V	12	24	48	110	230
	Operation capacitor C_{50}	µF/VAC	39/24	10/45	2,2/90	0,39/240	0,1/440
	Operation capacitor C_{60}	µF/VAC	33/24	8,2/45	1,8/90	0,33/240	0,082/440

Circuit diagram Parallel circuit

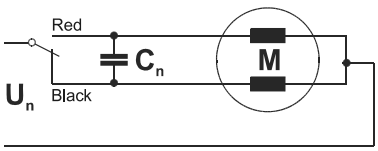

Red = clockwise rotation
Black = counter clockwise rotation

Dimensions

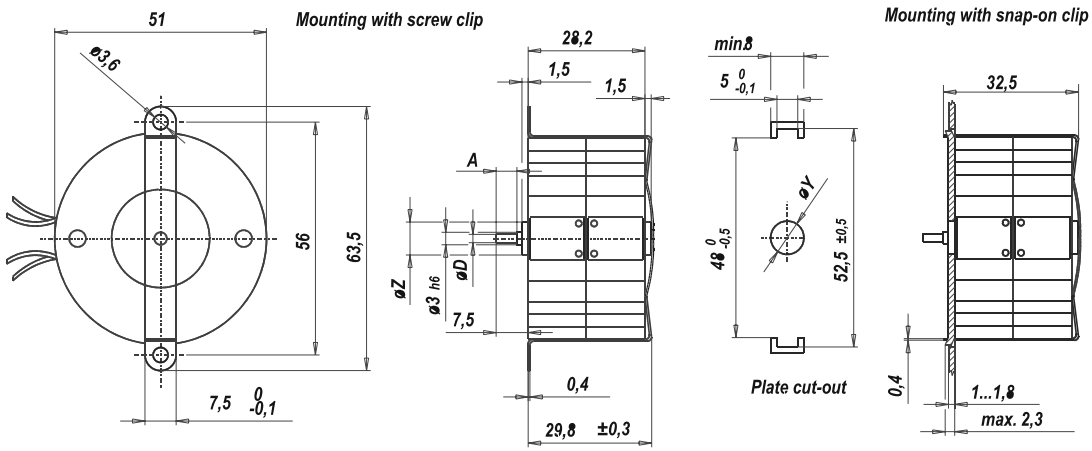

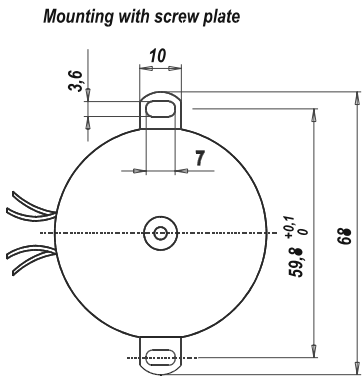

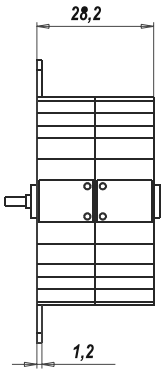

øRotor-shaft	øD	Dim. A
1,5	1,5js8	5
2	2js8	5
3	3h6	-

øZ	øY
8 0 -0,05	8F8
10 0 -0,05	10F8

UFR1/UFR3/UFR4

Dimensions (mm)	∅ 52 x 28 / ∅ 52 x 42 / ∅ 52 x 56
Voltage (V)	12–230
Speed (rpm) 50 Hz	500
60 Hz	600
Pole number	12
Running torque (cNm)	
50 Hz	2,8 / 3,7 / 5,3
60 Hz	2,6 / 3,1 / 4,7
Power output (W)	
50 Hz	1,5 / 1,9 / 2,8
60 Hz	1,6 / 2 / 3
Gear combination	A, D, M, B, F, V, J, O

Standard Data

Climatic class	wide-spread according to DIN IEC 60721-2-1
Ambient temperature operation	°C -15...+55
Ambient temperature storage	°C -20...+100
Thermal resistance at f=0 R_{therm}	11 K/W (UFR1), 7 K/W (UFR4)
Thermal class	A according to DIN EN 60085 (B on request)
Approval	standard (UL/CSA on request)
Mounting	any position
Electrical connection	cable
Protection	IP 30 according to DIN EN 60529
Weight	180 g (UFR1), 370 g (UFR4)
Rotor stalling	motor can be stopped when voltage is applied, without being overheated
Bearings	sintered bronze, self-lubricating
Electric strength	according to DIN EN 60034-1/DIN EN 60335-1

Order Reference

Type	Synchronous Motor					UFR	1	0	N	24 V/50 Hz	R	N
Configuration	1	Two coils										
	3	Three coils										
	4	Four coils										
Rotor shaft, mounting	0	centring 8 mm, shaft 3,0 mm, clip	A	centring 12 mm, shaft 3,0 mm, clip								
	1	centring 8 mm, shaft 2,0 mm, clip	E	centring 10 mm, shaft 3,0 mm, screw plate*								
	2	centring 8 mm, shaft 1,5 mm, clip	K	centring 10 mm, shaft 2,0 mm, screw plate*								
	3	centring 8 mm, shaft 3,0 mm, screw plate*	M	centring 10 mm, shaft 1,5 mm, screw plate*								
	4	centring 8 mm, shaft 2,0 mm, screw plate*										
	5	centring 8 mm, shaft 1,5 mm, screw plate*										
Approval	N	Approval Standard										
Voltage/Frequency		See next page										
Direction		reversible										
Cable	N	cable 150 mm (other on request)										

* screw plate not for UFR3 and UFR4

UFR

Technical Data

UFR1	Rated frequency	Hz	50		60	
	Speed n	rpm	500		600	
	Power output P_{mech}	W	1,5		1,6	
	Running torque M_n	cNm	2,8		2,6	
	Power consumption P_{el}	W	3,3		3,6	
	Detent torque M_S	cNm	0,46			
	Rotor inertia J_R	gcm^2	14,2			
	Capacitors at Rated voltage U_N	V	24	48	110	230
	Operation capacitor C_{50}	µF/VAC	10/45	2,7/90	0,47/200	0,12/400
	Operation capacitor C_{60}	µF/VAC	8,2/45	2,2/90	0,39/200	0,10/400
UFR3	Rated frequency	Hz	50		60	
	Speed n	rpm	500		600	
	Power output P_{mech}	W	1,9		2	
	Running torque M_n	cNm	3,7		3,1	
	Power consumption P_{el}	W	6,1		5,1	
	Detent torque M_S	cNm	0,54			
	Rotor inertia J_R	gcm^2	17			
	Capacitors at Rated voltage U_N	V	24	48	110	230
	Operation capacitor C_{50}	µF/VAC	39/24	10/50	1,8/110	0,39/240
	Operation capacitor C_{60}	µF/VAC	27/24	6,8/50	1,2/110	0,27/240
UFR4	Rated frequency	Hz	50		60	
	Speed n	rpm	500		600	
	Power output P_{mech}	W	2,8		3	
	Running torque M_n	cNm	5,3		4,7	
	Power consumption P_{el}	W	6,4		6,9	
	Detent torque M_S	cNm	0,8			
	Rotor inertia J_R	gcm^2	24,2			
	Capacitors at Rated voltage U_N	V	24	48	110	230
	Operation capacitor C_{50}	µF/VAC	18/45	4,7/90	0,82/200	0,22/440
	Operation capacitor C_{60}	µF/VAC	15/45	3,9/90	0,68/200	0,18/440
	Tolerance of voltage		standard power supply system + 10% ... - 10%			
	Winding temperature T_{max}		105°C			
	Duty cycle		100%			
	Direction of rotation		reversible			

Circuit diagram

UFR1 Parallel circuit

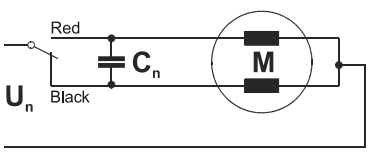

UFR3 Parallel circuit

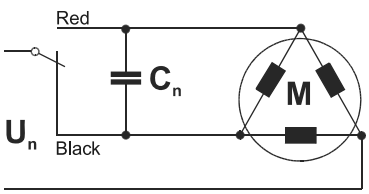

UFR4 Parallel circuit

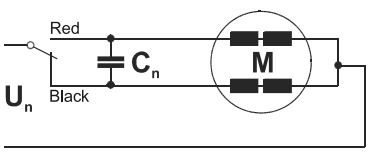

Red = clockwise rotation
Black = counter clockwise rotation

Dimensions

UFR1

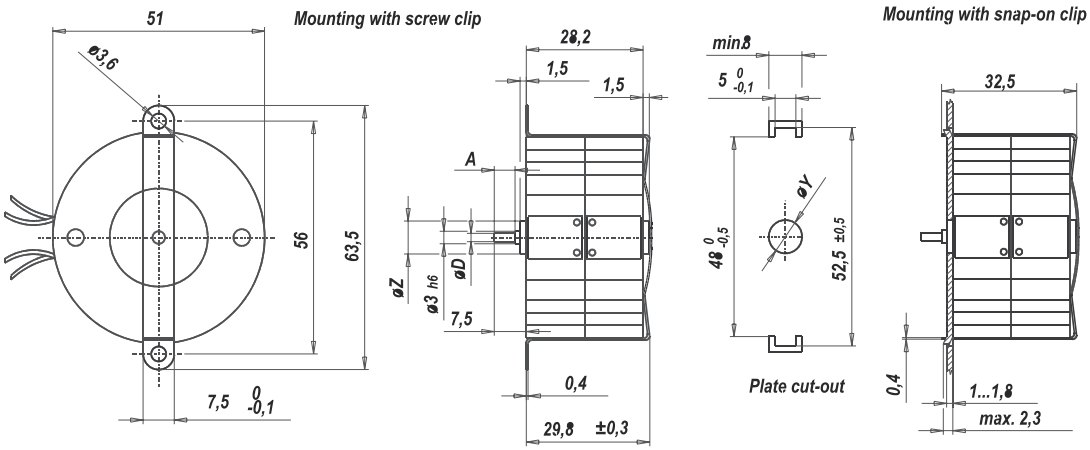

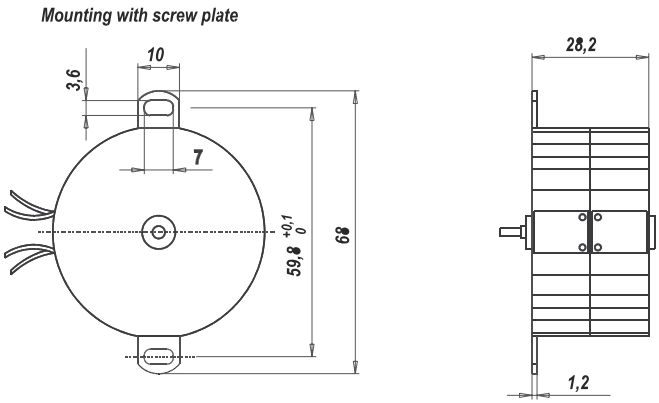

øRotor-shaft	øD	Dim. A
1,5	1,5js8	5
2	2js8	5
3	3h6	-

øZ	øY
8 0 -0,05	8F8
10 0 -0,05	10F8

UFR3

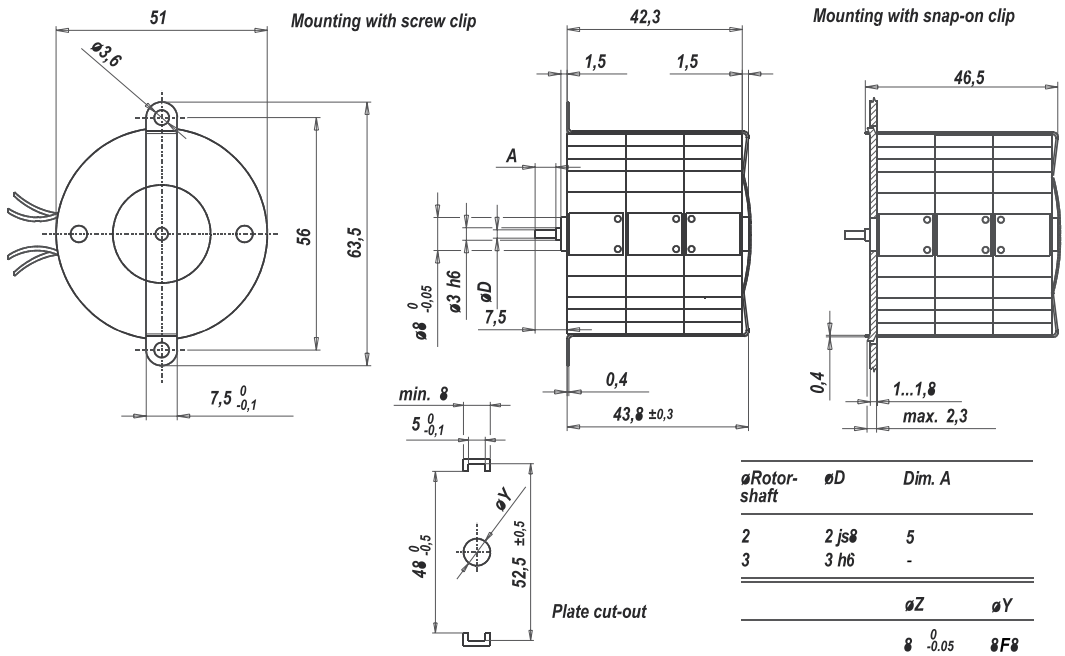

øRotor-shaft	øD	Dim. A
2	2 js8	5
3	3 h6	-

øZ	øY
8 0 -0.05	8F8
10 0 -0.05	10F8

UFR

Dimensions

UFR4

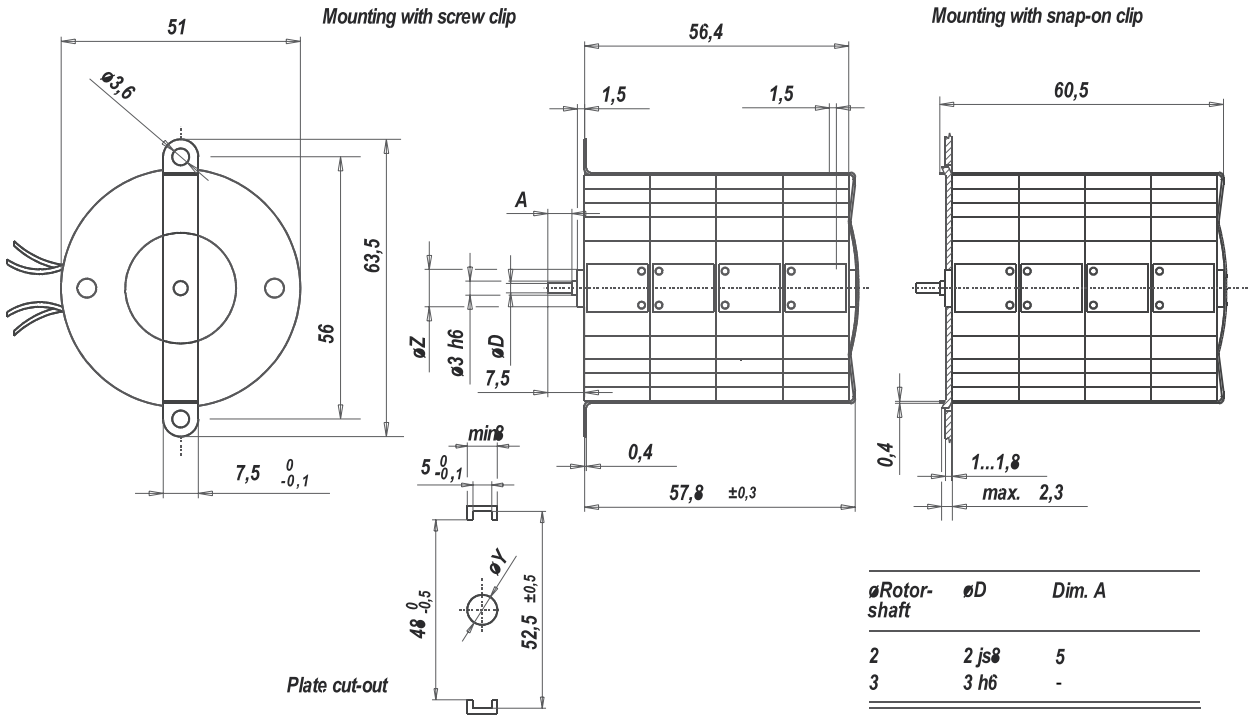

øRotor-shaft	øD	Dim. A
2	2 js8	5
3	3 h6	-

øZ	øY
8 0 -0.05	8F8
10 0 -0.05	10F8

UHM

UHM1/5; UHM4/8

Dimensions (mm)	∅ 59 x 35 / ∅ 59 x 70
Voltage (V)	12–230
Speed (rpm) 50 Hz	250
60 Hz	300
Pole number	24
Running torque (cNm)	
50 Hz	8,5–15
60 Hz	6,6–9,5
Power output (W)	
50 Hz	2,2–3,9
60 Hz	2,1–3
Gear combination	J

Standard Data

Climatic class	wide-spread according to DIN IEC 60721-2-1
Ambient temperature operation	-15 ... +55° C
Ambient temperature storage	-20 ... +100° C
Thermal resistance at f=0 (R_{therm})	10 (UHM 1/5), 6,5 (UHM 4/8) K/W
Thermal class	A according to DIN EN 60085 (B on request)
Approval	standard
Mounting	any position
Electrical connection	cable
Protection	IP 30 according to DIN EN 60529
Weight (g)	300 (UHM1/5), 580 (UHM4/8)
Rotor stalling	motor can be stopped when voltage is applied, without being overheated
Bearings	sintered bronze, self-lubricating
Electric strength	according to DIN EN 60034-1/DIN EN 60335-1

Order Reference

Type	Synchronous Motor						UHM	1	0	N	12V/50Hz	R	N
Configuration	1	two coils, standard magnet	4	four coils, standard magnet									
	5	two coils, stronger magnet	8	four coils, stronger magnet									
Rotor shaft, mounting	0	centring 12 mm, shaft 6,35 mm, clip **	3	centring 12 mm, shaft 6,35 mm, screw plate *									
	1	centring 12 mm, shaft 4,0 mm, clip **	4	centring 12 mm, shaft 4,0 mm, screw plate *									
	2	centring 12 mm, shaft 3,0 mm, clip **	5	centring 12 mm, shaft 3,0 mm, screw plate *									
Approval	N	Approval Standard											
Voltage/Frequency		See next page											
Direction		reversible											
Cable	N	cable 150 mm (other on request)											

* not for UHM4/8

** not for UHM1/2

UHM

Technical Data

UHM1/5	Rated frequency	Hz	50		60		
	Speed n	rpm	250		300		
	Power output P_{mech}	W	2,2 (UHM 1); 2,5 (UHM 5)		2,1 (UHM 1)		
	Running torque M_n	cNm	8,5 (UHM 1); 9,5 (UHM 5)		6,6 (UHM 1)		
	Power consumption P_{el}	W	5		4,5		
	Detent torque M_S	cNm	1,3 (UHM1); 2,1 (UHM5)				
	Rotor inertia J_R	gcm^2	49 (UHM1); 56 (UHM5)				
	Capacitors at Rated voltage U_N	V	12	24	48	110	230
	Operation capacitor C_{50} UHM1/5	µF/VAC	56/24	15/50	3,9/100	0,68/220	0,18/440
	Operation capacitor C_{60} UHM1/5	µF/VAC	39/24	10/50	2,7/100	0,47/220	0,12/440
UHM4/8	Rated frequency	Hz	50		60		
	Speed n	rpm	250		300		
	Power output P_{mech}	W	3,9 (UHM4); 3,9 (UHM8)		3,0 (UHM4)		
	Running torque M_n	cNm	15 (UHM4)		9,5 (UHM4); 14,7 (UHM8)		
	Power consumption P_{el}	W	10 (UHM4)		9.0 (UHM4)		
	Detent torque M_S	cNm	3,4 (UHM4); 5,3 (UHM8)				
	Rotor inertia J_R	gcm^2	135 (UHM4); 141 (UHM8)				
	Capacitors at Rated voltage U_N	V	12	24	48	110	230
	Operation capacitor C_{50} UHM4/8	µF/VAC	100/24	27/50	6,8/100	1,2/220	0,33/440
	Operation capacitor C_{60} UHM4/8	µF/VAC	47/24	15/50	4,7/100	0,82/220	0,15/440
	Tolerance of voltage		standard power supply system + 10% ... -10%				
	Winding temperature T_{max}		105°C				
	Duty cycle		100%				
	Direction of rotation		reversible				

Circuit diagram Parallel circuit

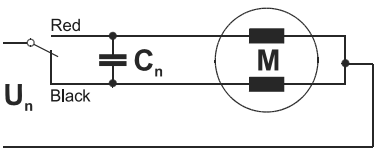

Red = clockwise rotation
Black = counter clockwise rotation

Dimensions

UHM1/5

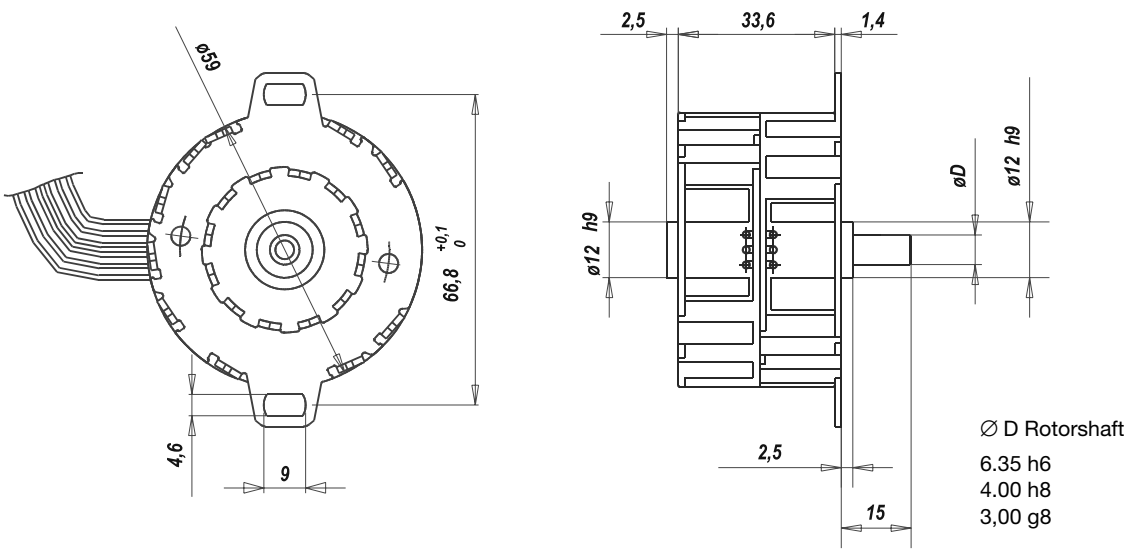

UHM4/8

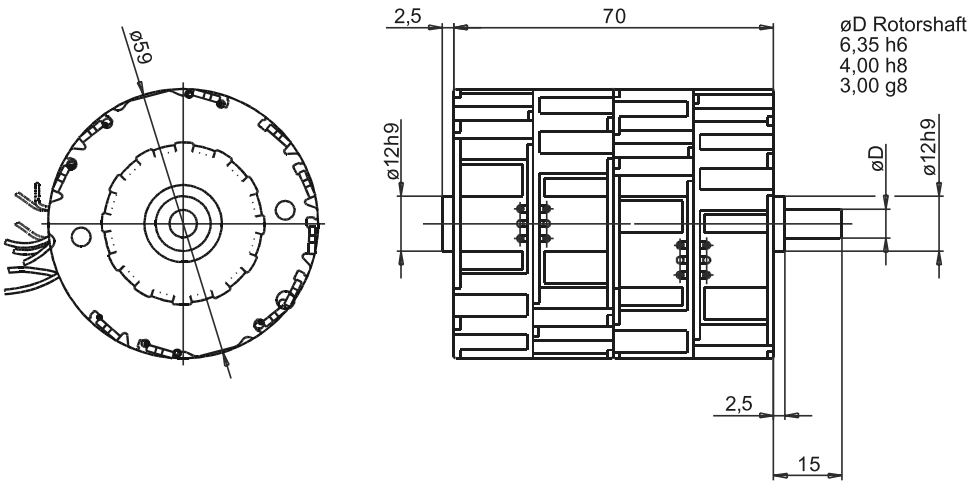

UP

UP (SM6443; SM6444)

Dimensions (mm)	∅ 64 x 34
Voltage (V)	12–230
Speed (rpm) 50 Hz 60 Hz	250/375 (SM6443); 375 (SM6444) 300/450 (SM6443); 450 (SM6444)
Pole number	24/16 (SM6443); 16 (SM6444)
Running torque (cNm) 50 Hz 60 Hz	10,3–18,5 (SM6443); 28–35 (SM6444) 8,5–17 (SM6443); 21–30 (SM6444)
Power output (W) 50 Hz 60 Hz	3,5–7,3 (SM6443); 11–13,8 (SM6444) 3,9–8,0 (SM6443); 9,9–14,2 (SM6444)
Gear combination	O, P, R

Standard Data

Climatic class	wide-spread according to DIN IEC 60721-2-1
Ambient temperature operation	°C -15 ... +40
Ambient temperature storage	°C -20 ... +100
Thermal class	B (SM6443) ; A (SM6444) according to DIN EN 60085
Approval	standard
Mounting	any position
Electrical connection	cable
Protection	IP 30 according to DIN EN 60529
Weight	500 g (SM6443); 550 g (SM6444)
Rotor stalling	motor can be stopped when voltage is applied, without being overheated
Bearings	Sintered bronze, self- lubricating

Order Reference

Type	Synchronous Motor	SM6443 R / SM6444	250	24 V	50 Hz
rpm	250 (SM6443 R) 375 (SM6443 R / SM6444 R)				
Voltage	24 V 110 V 230 V				
Frequency	50 Hz 60 Hz 50/60 Hz				

Technical Data

Motor type (SM6443)			R-250/1	R-250/1	R-375/1	R-375/1	R-375/2	R-375/2	R-375/S2/1	R-375/S2/1
	Rated frequency	Hz	50	60	50	60	50	60	50	60
	Speed	rpm	250	300	375	450	375	450	375	450
	Running torque M_n	cNm	13,5	12,5	12	10,5	10,5	8,5	18,5	17
	Power output	W	3,54	3,94	4,7	4,95	4,13	4	7,3	8
	Power consumption	VA	10,3	11,3	11,7	12,65	9,55	9,7	18	21
	Nominal current at 230 V	mA	44,5	49	51	55	41,5	42	78,2	91,3
	Max. permissible ext. inertia	gcm^2	200	130	100	50	80	40	130	60
	Detent torque M_s	cNm	2,5	2,5	1,8	1,8	1,8	1,8	2	2
	Winding temperature increase	K	85	90	95	100	80	80	90 (S2 60 min.)	
	Weight	g	500	500	500	500	500	500	500	500
Capicitors	at U_N: 24 V	µF/V~	25,8/63	25,8/63	30/63	30/63	25,8/63	25,8/63	47/63	47/63
	at U_N: 110 V	µF/V~	1,3/250	1,3/250	1,3/250	1,3/250	1,3/250	1,3/250	2,2/250	2,2/250
	at U_N: 230 V	µF/V~	0,27/500	0,27/500	0,33/500	0,33/500	0,27/500	0,27/500	0,47/500	0,47/500)

Motor type (SM6444)			R-375/S2/1	R-375/S2/1	R-375/S2/2	R-375/S2/2
	Rated frequency	Hz	50	60	50	60
	Speed	rpm	375	450	375	450
	Running torque M_n	cNm	28	21	35	30
	Power output	W	11	9,9	13,8	14,2
	Power consumption	VA	26	28	31	33,5
	Nominal current at 230 V	mA	113	122	135	145
	Max. permissible external inertia	gcm^2	500	350	600	400
	Detent torque M_s	cNm	7	7	7	7
	Winding temperature increase	K	85 (S2 6,5 min)	85 (S2 6,5 min)	95 (S2 5 min.)	95 (S2 5 min.)
	Weight	g	550	550	550	550
Capicitors	at U_N: 24 V	µF/V~	68 / 63	68 / 63	82 / 63	82 / 63
	at U_N: 110 V	µF/V~	2,7 / 250	2,7 / 250	3,3 / 250	3,3 / 250
	at U_N: 230 V	µF/V~	0,68 / 500	0,68 / 500	0,82 / 500	0,82 / 500

Circuit diagram Parallel circuit

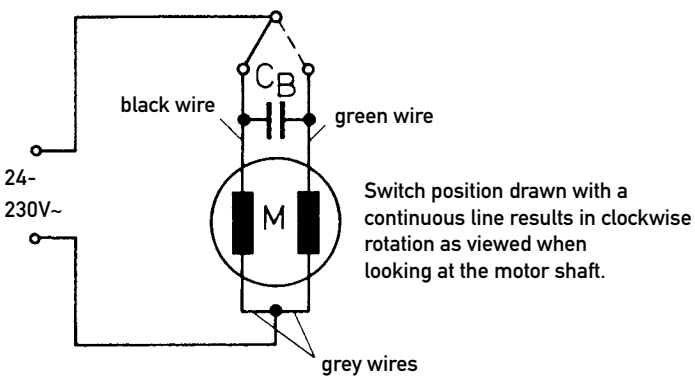

UP

Dimensions

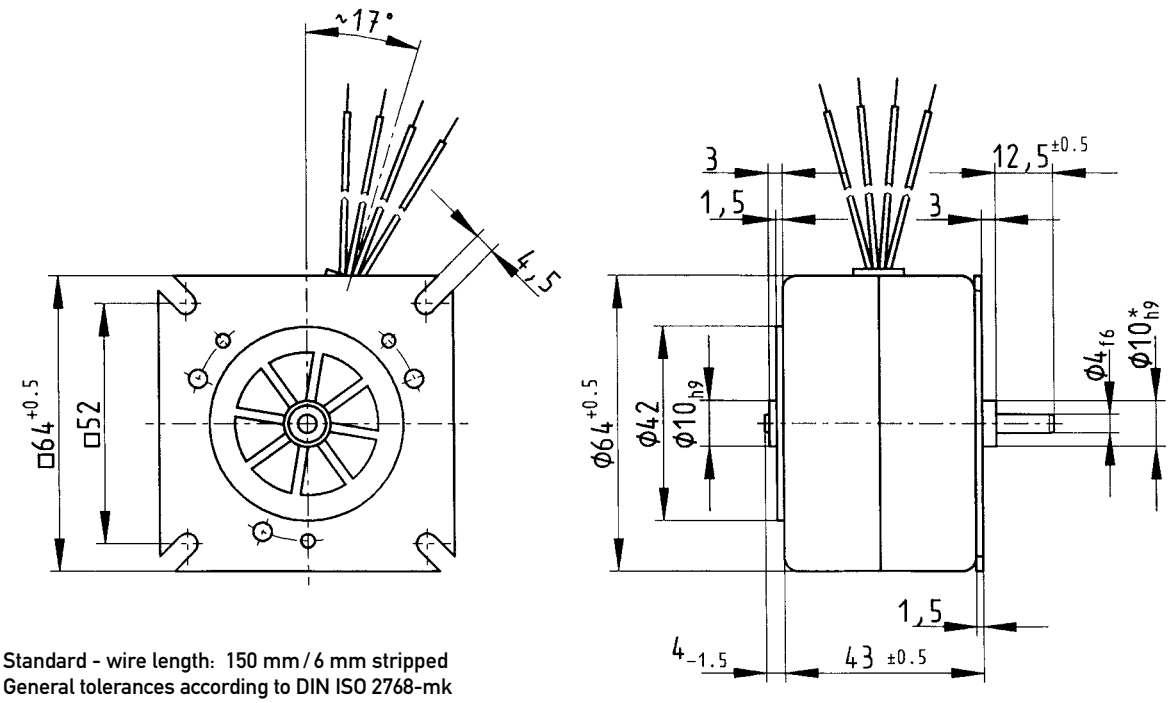

Standard - wire length: 150 mm / 6 mm stripped
General tolerances according to DIN ISO 2768-mk

* on request 14h9

Chart: Torque versus voltage

UPM1 (SM 6443 R-250/1)

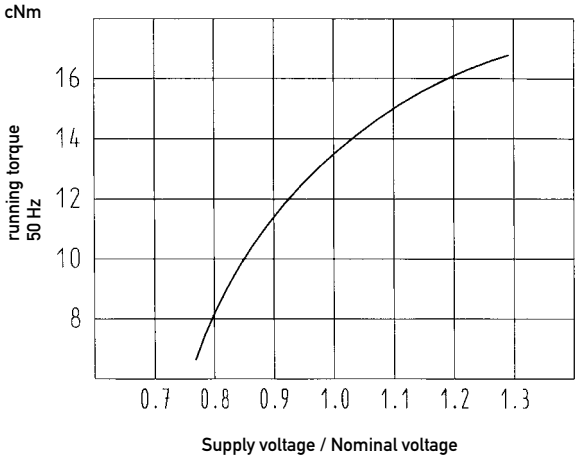

UPU1 (SM 6443 R-375/1)

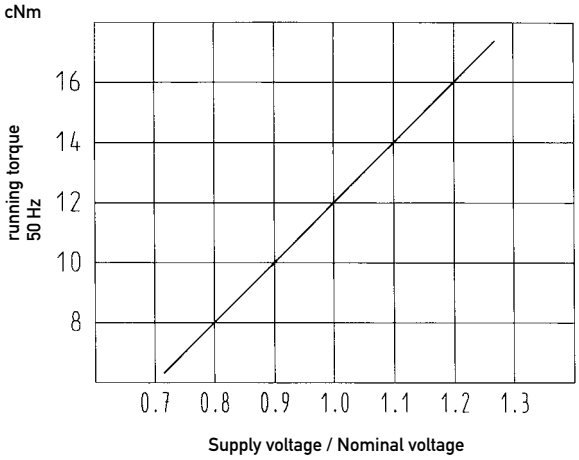

UPU1 (SM 6443 R-375/2)

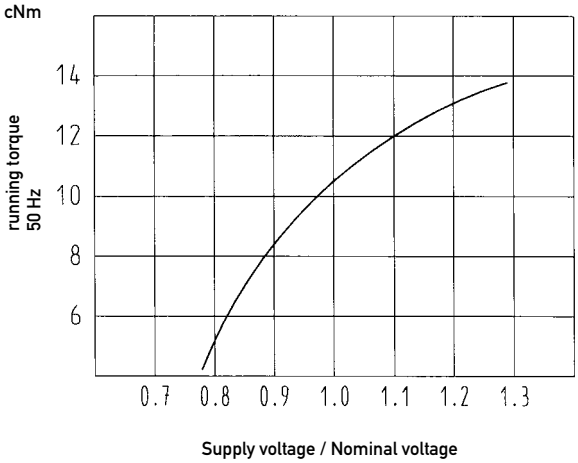

UPU1 (SM 6443 R-375/S2/1)

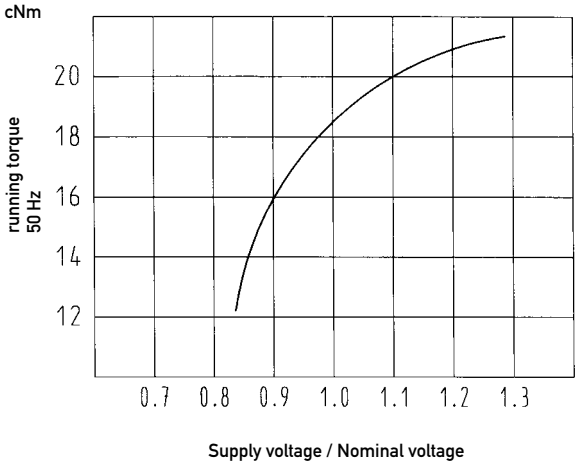

Chart: Possible duty cycle versus torque

UPU5 (SM 6444 R-375/S2/1)

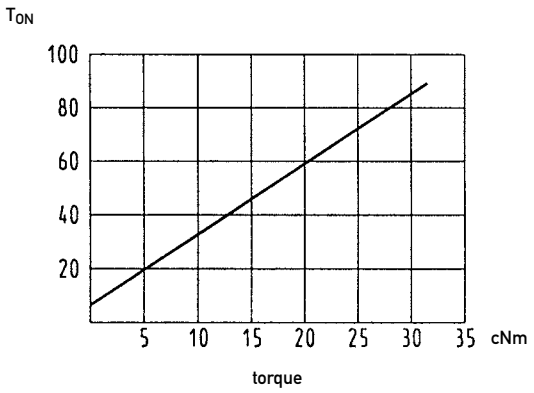

UPU5 (SM 6444 R-375/S2/2)

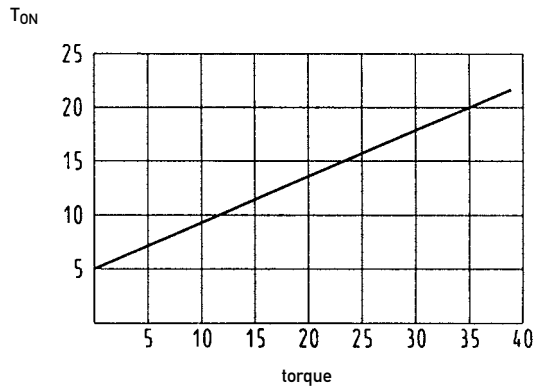

Chart: Torque versus voltage

UPU5 (SM 6444 R-375/S2/1)

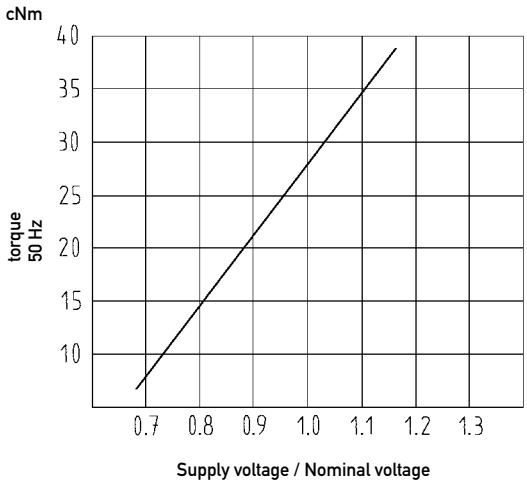

UPU5 (SM 6444 R-375/S2/2)

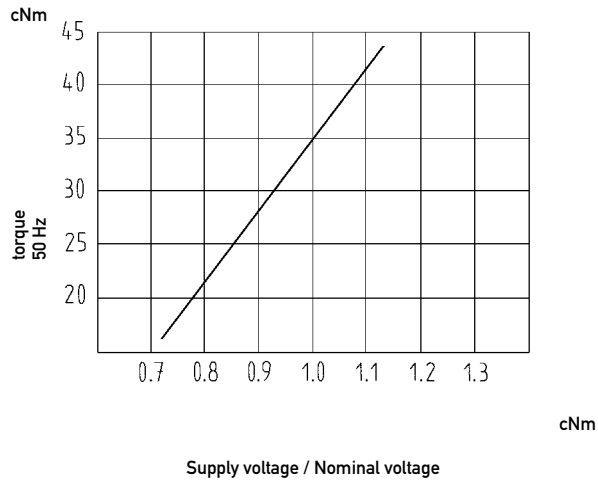

UNU0 (SM 3532 RG)

Dimensions (mm)	∅ 35 x 32
Voltage (V)	24–230
Speed (rpm) 50 Hz	375
60 Hz	450
Pole number	16
Stalled limited torque (cNm)	
50 Hz	0,6
60 Hz	0,6
Power output (W)	
50 Hz	0,25
60 Hz	0,3
Gear combination	O, P, R

Standard Data

Climatic class	wide-spread according to DIN IEC 60721-2-1
Ambient temperature operation	°C -15 ... +40
Ambient temperature storage	°C -20 ... +100
Thermal class	B according to DIN EN 60085
Approval	standard
Mounting	any position
Electrical connection	cable
Protection	IP 30 according to DIN EN 60529
Weight	100 g
Rotor stalling	motor can be stopped when voltage is applied, without being overheated
Bearings	Sintered bronze, self- lubricating

Order Reference

Type	Synchronous Motor	SM 3532 RG 375	24 V	50 Hz
Voltage	24 V 110 V 230 V			
Frequency	50 Hz 60 Hz			

UNU0

Technical Data

	Rated frequency	Hz	50	60
	Speed of rotation	rpm	375	450
	Stalled limited torque	cNm	0,6 +/-15%	0,6 +/-15% (see chart next page)
	Power output	W	0,25	0,3
	Power consumption	VA	2,65	2,75
	Nominal current at 230 V	mA	11,5	12
	Detent torque M_S	cNm	0,1	0,1
	Winding temperature increase	K	45	50
Capacitors	at U_N: 24 V	µF/V~	4,7/63	4,7/63
	at U_N: 110 V	µF/V~	0,22/250	0,22/250
	at U_N: 230 V	µF/V~	0,068/500	0,068/500

Circuit diagram Parallel circuit

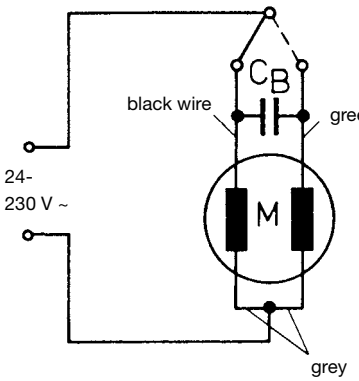

Switch position drawn with a continuous line results in clockwise rotation as viewed when looking at the motor shaft.

Dimensions

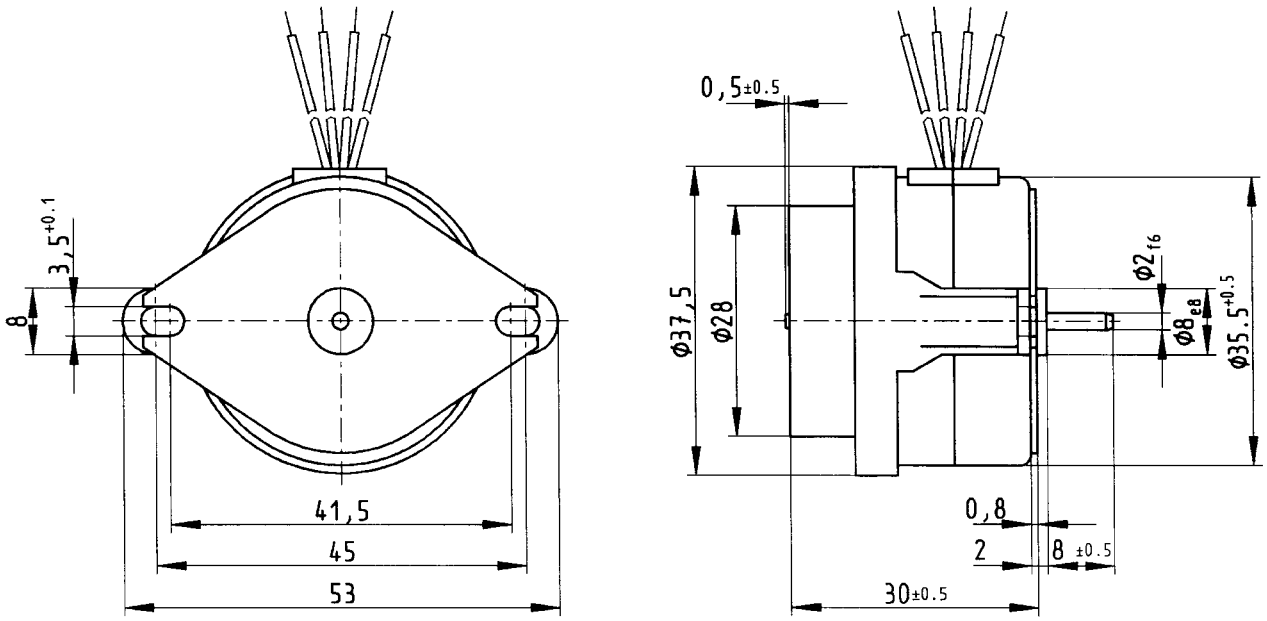

Standard - wire length: 100 mm / 6 mm stripped
General tolerances acc. to DIN ISO 2768-mk

Chart: Torque limit versus motor temperature

UNU0 (SM 3532 RG-375)

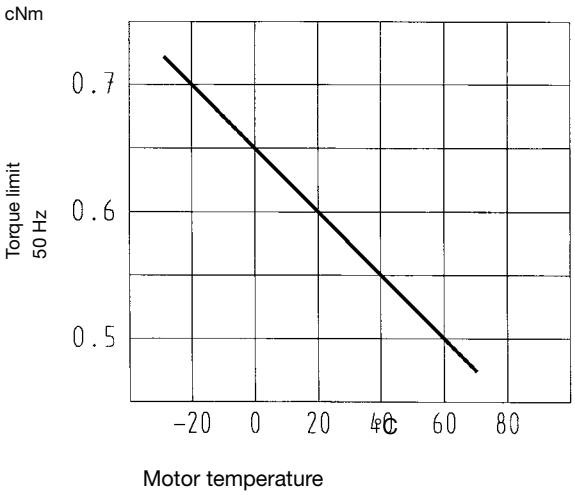

UOU0

UOU0 (SM 5032 RG)

Dimensions (mm)	∅ 50 x 32
Voltage (V)	24–230
Speed (rpm) 50 Hz	375
60 Hz	450
Pole number	16
Stalled limited torque (cNm)	
50 Hz	2
60 Hz	2
Power output (W)	
50 Hz	0,8
60 Hz	0,95
Gear combination	O, P, R

Standard Data

Climatic class	wide-spread according to DIN IEC 60721-2-1
Ambient temperature operation	°C -15 ... +40
Ambient temperature storage	°C -20 ... +100
Thermal class	B according to DIN EN 60085
Approval	standard
Mounting	any position
Electrical connection	cable
Protection	IP 30 according to DIN EN 60529
Weight	190 g
Rotor stalling	motor can be stopped when voltage is applied, without being overheated
Bearings	Sintered bronze, self- lubricating

Order Reference

Type	Synchronous Motor	SM 5032 RG 375	24 V	50 Hz
Voltage	24 V 110 V 230 V			
Frequency	50 Hz 60 Hz			

Technical Data

	Rated frequency	Hz	50	60
	Speed of rotation	rpm	375	450
	Stalled limited torque	cNm	2 +10/-15%	2 +10/-15% (see chart next page)
	Power output	W	0,8	0,95
	Power consumption	VA	4,1	5,3
	Nominal current at 230 V	mA	18	23
	Detent torque M_S	cNm	0,3	0,3
	Winding temperature increase	K	55	70
Capacitors	at U_N: 24 V	µF/V~	10/63	10/63
	at U_N: 110 V	µF/V~	0,47/250	0,47/250
	at U_N: 230 V	µF/V~	0,12/500	0,12/500

Circuit diagram Parallel circuit

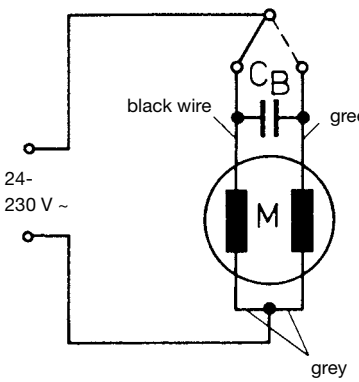

Switch position drawn with a continuous line results in clockwise rotation as viewed when looking at the motor shaft.

UOU0

Dimensions

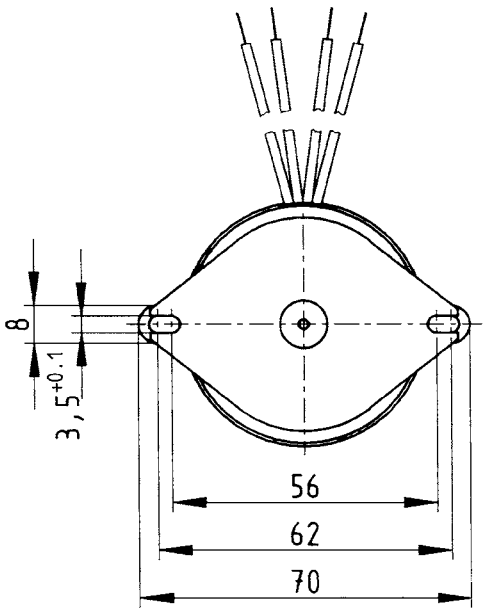

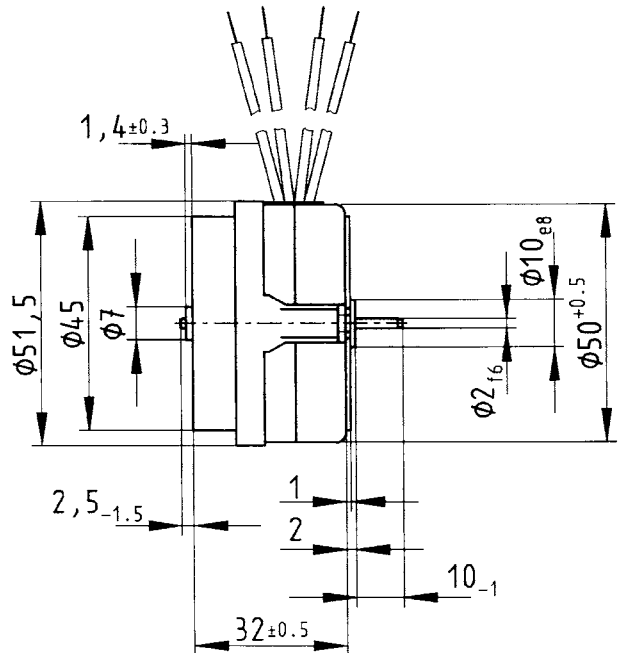

Standard - wire length: 200 mm / 4 mm stripped
General tolerances acc. to DIN ISO 2768-mk

Chart: Torque limit versus motor temperature

UOU0 (SM 5032 RG-375)

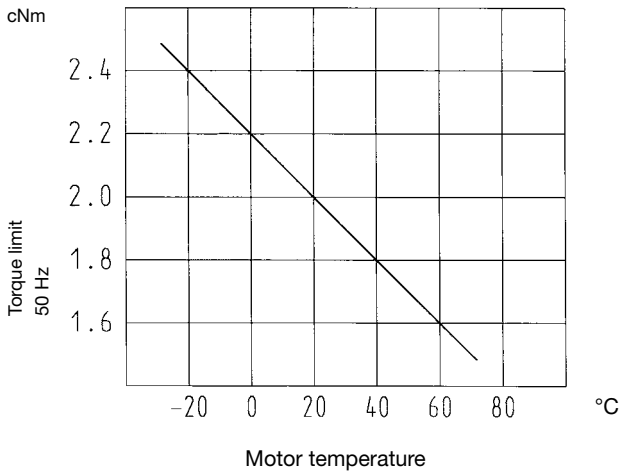

UPU0 (SM6469RG)

Dimensions (mm)	∅ 64 x 69
Voltage (V)	24–230
Speed (rpm) 50 Hz	375
60 Hz	450
Pole number	16
Stalled limited torque (cNm)	
50 Hz	7
60 Hz	7
Power output (W)	
50 Hz	2,75
60 Hz	3,3
Gear combination	O, P, R

Standard Data

Climatic class	wide-spread according to DIN IEC 60721-2-1
Ambient temperature operation	°C -15 ... +40
Ambient temperature storage	°C -20 ... +100
Thermal class	B according to DIN EN 60085
Approval	standard
Mounting	any position
Electrical connection	cable
Protection	IP 30 according to DIN EN 60529
Weight	600 g
Rotor stalling	motor can be stopped when voltage is applied, without being overheated
Bearings	Sintered bronze, self- lubricating

Order Reference

Type	Synchronous Motor	SM6469RG 375	24 V	50 Hz
Voltage	24 V 110 V 230 V			
Frequency	50 Hz 60 Hz			

UPU0

Technical Data

	Rated frequency	Hz	50	60
	Speed of rotation	rpm	375	450
	Stalled limited torque	cNm	7 +/-10%	7 +/-10% (see chart next page)
	Power output	W	2,75	3,3
	Power consumption	VA	10,5	13,5
	Nominal current at 230 V	mA	46	59
	Detent torque M_S	cNm	3	3
	Winding temperature increase	K	70	90
Capacitors	at U_N: 24 V	µF/V~	30/63	30/63
	at U_N: 110 V	µF/V~	1,3/250	1,3/250
	at U_N: 230 V	µF/V~	0,33/500	0,33/500

Circuit diagram Parallel circuit

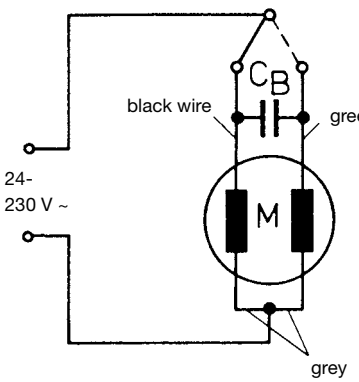

Switch position drawn with a continuous line results in clockwise rotation as viewed when looking at the motor shaft.

Dimensions

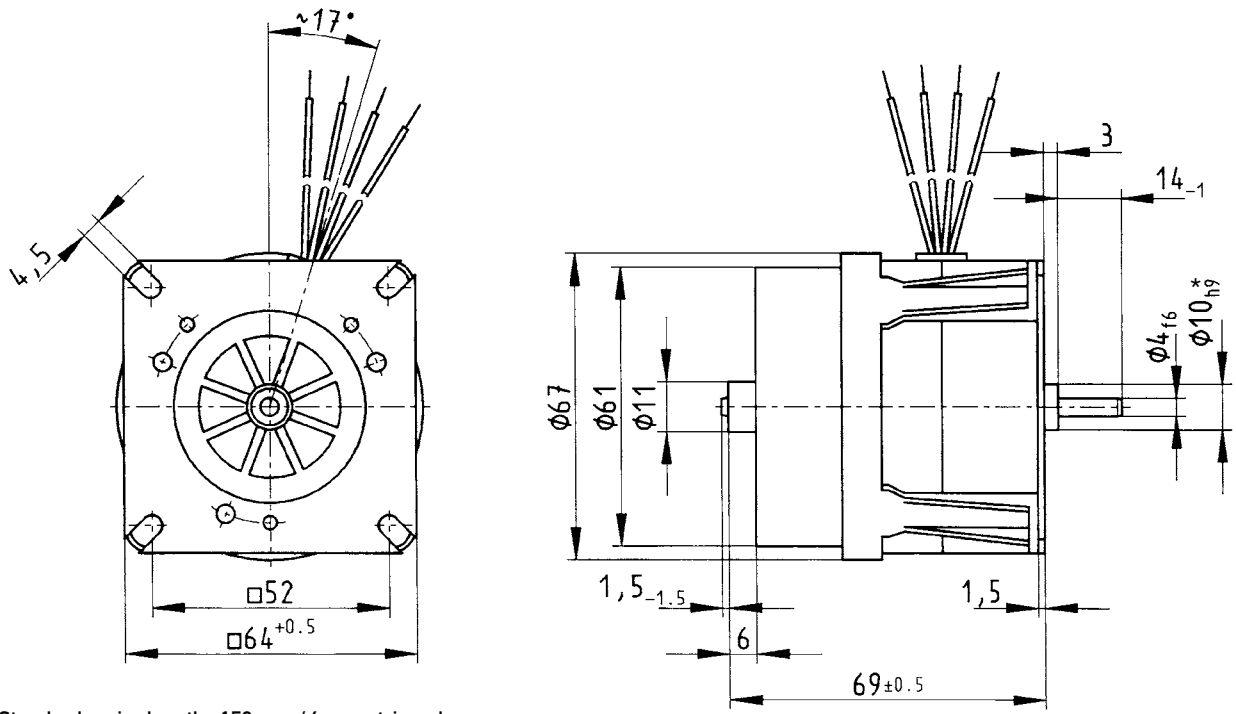

Standard - wire length: 150 mm / 6 mm stripped
General tolerances according to DIN ISO 2768-mk

* on request 14h9

Chart: Torque limit versus motor temperature

UPU0 (SM 6469 RG-375)

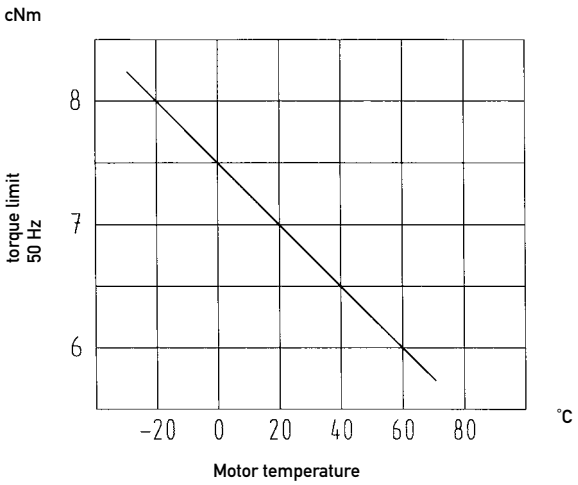

Stepper Motors

Performance Chart

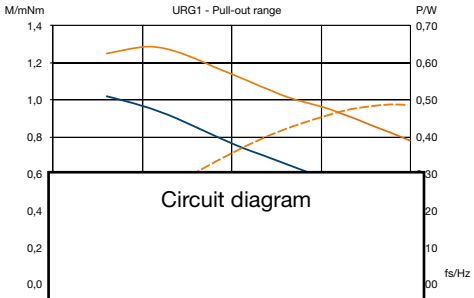

Circuit diagram

	0	I	II	III	IV
1	+	−	−	+	+
2	+	+	−	−	+
3	−	+	+	−	−
4	−	−	+	+	−

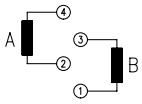

CW

CCW

JOHNSON ELECTRIC

innovating motion

URG

Dimensions (mm)	∅ 13 x 11
Step angle (°)	18
Holding torque * (mNm)	2,0
Detent torque (mNm)	0,3
Winding	bipolar
Gear combination	–

* winding for duty cycle 30 %, standard magnet

Standard Data

Climatic class	wide-spread according to DIN IEC 60721-2-1
Ambient temperature operation	°C -15 ... +60
Ambient temperature storage	°C -20 ... +100
Thermal resistance at f=0 R_{therm}	83 K/W
Thermal class	B according to DIN EN 60085
Approval	standard
Mounting	any position
Electrical connection	Pin, optional flex print
Protection	IP 40 according to DIN EN 60529
Weight	7 g
Rotor stalling	motor can be stopped when voltage is applied, without being overheated
Bearings	integrated high temperature plastic bearing

Order Reference

Type	Stepper Motor	URG	1E	N	6 Ω	R	C
Configuration	1E	bipolar, standard magnet					
Approval	N						
Resistance		see next page					
Direction	R	reversible					
Connector	N C	Pin flex print					

This motor type doesn't fulfil basis insulation requirements of EN 60335-1: 2004
Customer application must realize a suitable protection class.

Technical Data

bipolar	Rated voltage U_N	V	3	6	12
	Resistance per winding R_{20}	Ω	6	26	102
	Holding torque M_H	mNm	2,5		
	Detent torque M_S	mNm	0,3		
	Rotor inertia J_R	gcm^2	0,033		
	Steps per revolution		20		
	Duty cycle		30 %		
	Direction of rotation		reversible		

Dimensions

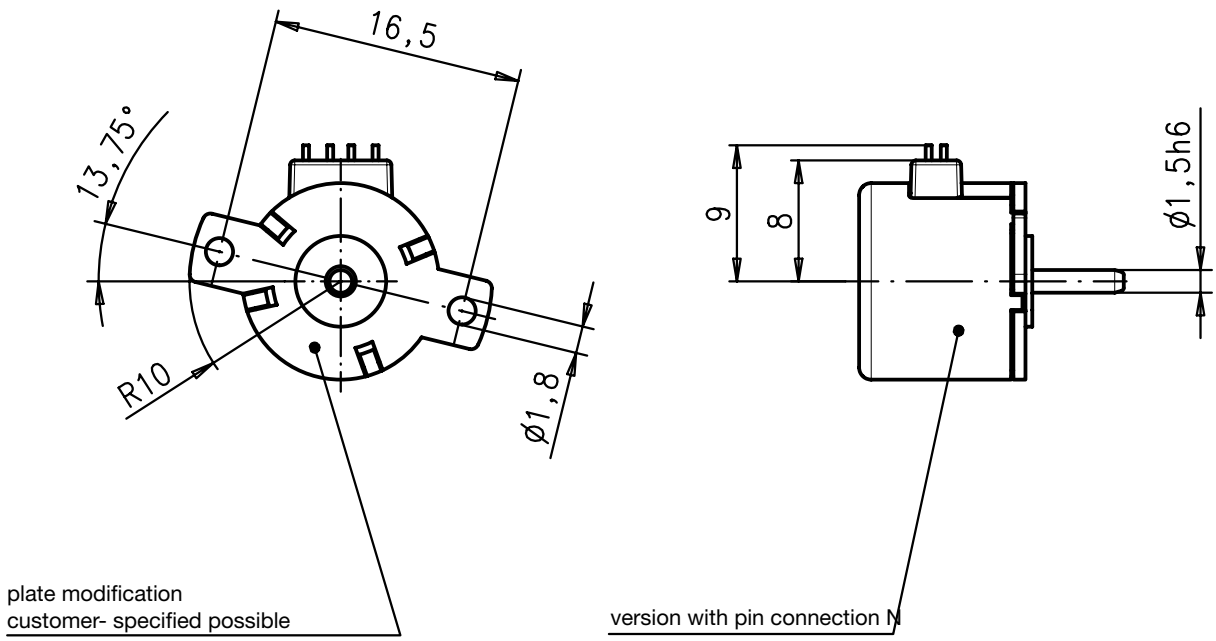

	0	I	II	III	IV
1	+	–	–	+	+
2	+	+	–	–	+
3	–	+	+	–	–
4	–	–	+	+	–

→ clockwise rotation

← counter clockwise rotation

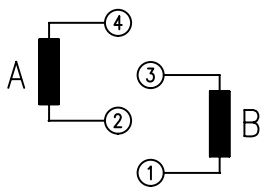

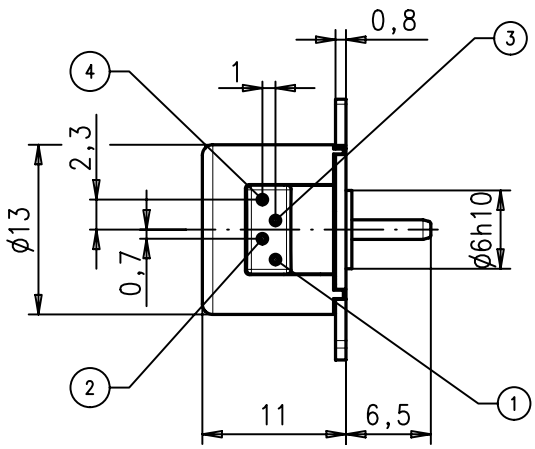

Dimensions

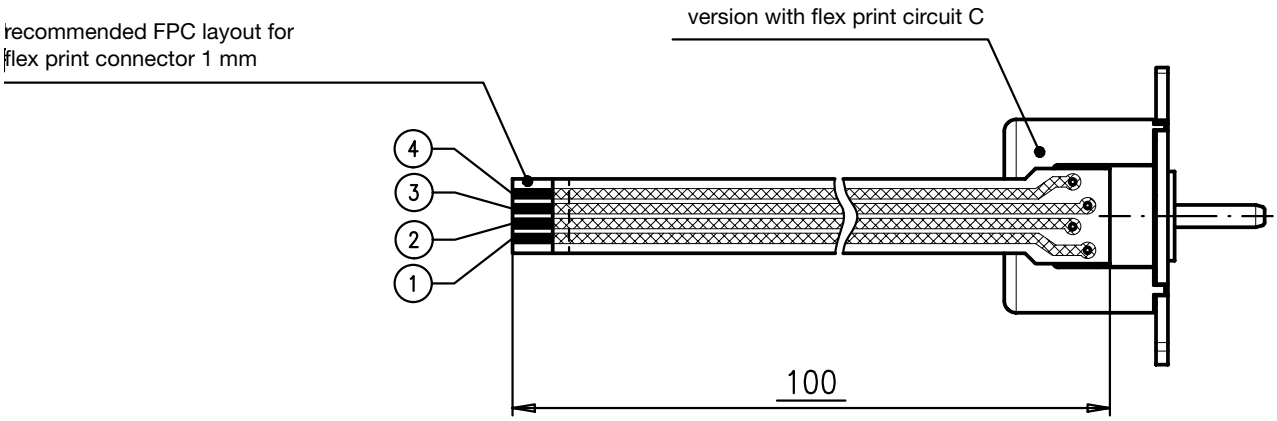

Performance Chart

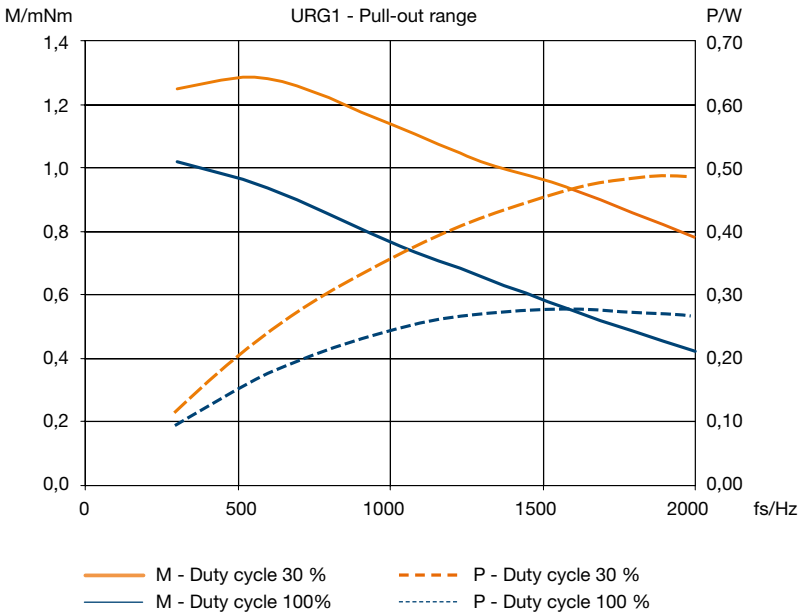

UAG1/2

UAG1/2

Dimensions (mm)	∅ 20 x 17,2
Step angle (°)	18
Holding torque (cNm)	0,7 / 0,5
Detent torque (cNm)	0,14
Winding	bipolar/unipolar
Gear combination	on request

Standard Data

Climatic class	wide-spread according to DIN IEC 60721-2-1
Ambient temperature operation	°C -40...+60
Ambient temperature storage	°C -40...+100
Thermal resistance at f=0 R_{therm}	50 K/W
Thermal class	B according to DIN EN 60085
Approval	standard
Mounting	any position
Electrical connection	insulation displacement connection, pins, lead wires
Protection	IP 40 according to DIN EN 60529
Weight	25 g
Rotor stalling	motor can be stopped when voltage is applied, without being overheated
Bearings	sintered bronze, self-lubricating

Order Reference

Type	Stepper Motor		UAG	1	0	N	27 (Ω)	R	E
Configuration	1	bipolar							
	2	unipolar							
Rotor shaft, mounting	0	centring 8 mm, mounting plate with screw M2							
	3	centring 8 mm, mounting plate with long holes							
	A	centring 6 mm, mounting plate with screw M2							
	E	centring 6 mm, mounting plate with long holes							
Approval	N	Approval Standard							
Resistance		See next page Resistance per winding for bipolar or unipolar.							
Direction		reversible							
Cable	E	Lead wires 150 mm with plug AMP MicroMatch 0-215083-6 (other on request)							

Technical Data

bipolar (UAG1)	Rated voltage U_N	V	6	12	24
	Resistance per winding	R_{20}	27	150	675
unipolar (UAG2)	Rated voltage U_N	V	6	12	24
	Resistance per winding R_{20}	Ω	35	170	700
	Steps per revolution	20			
	Duty cycle	100%			
	Winding temperature T_{max}	130° C			
	Rotor inertia J_R	0,31 gcm²			
	Holding torque M_H	0,7 cNm (UAG1) 0,5 cNm (UAG2)			
	Detent torque M_D	0,14 cNm			
	Direction of rotation	reversible			

Dimensions

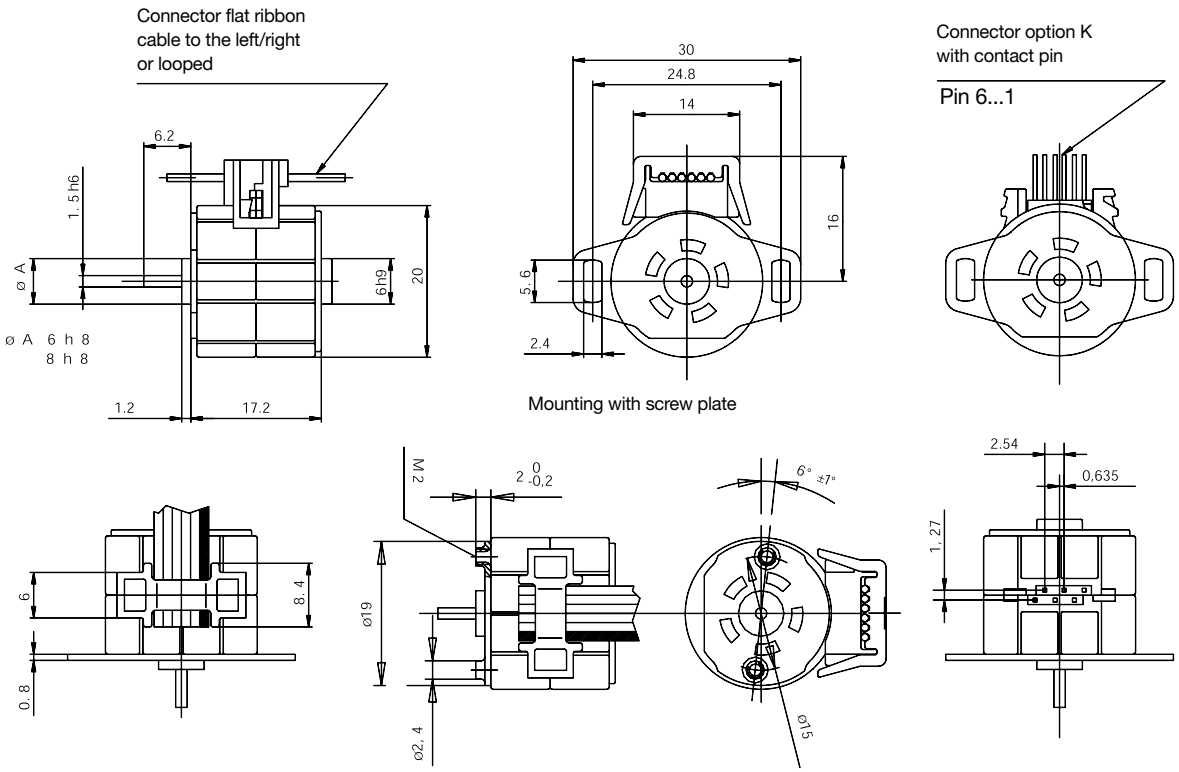

Performance Chart

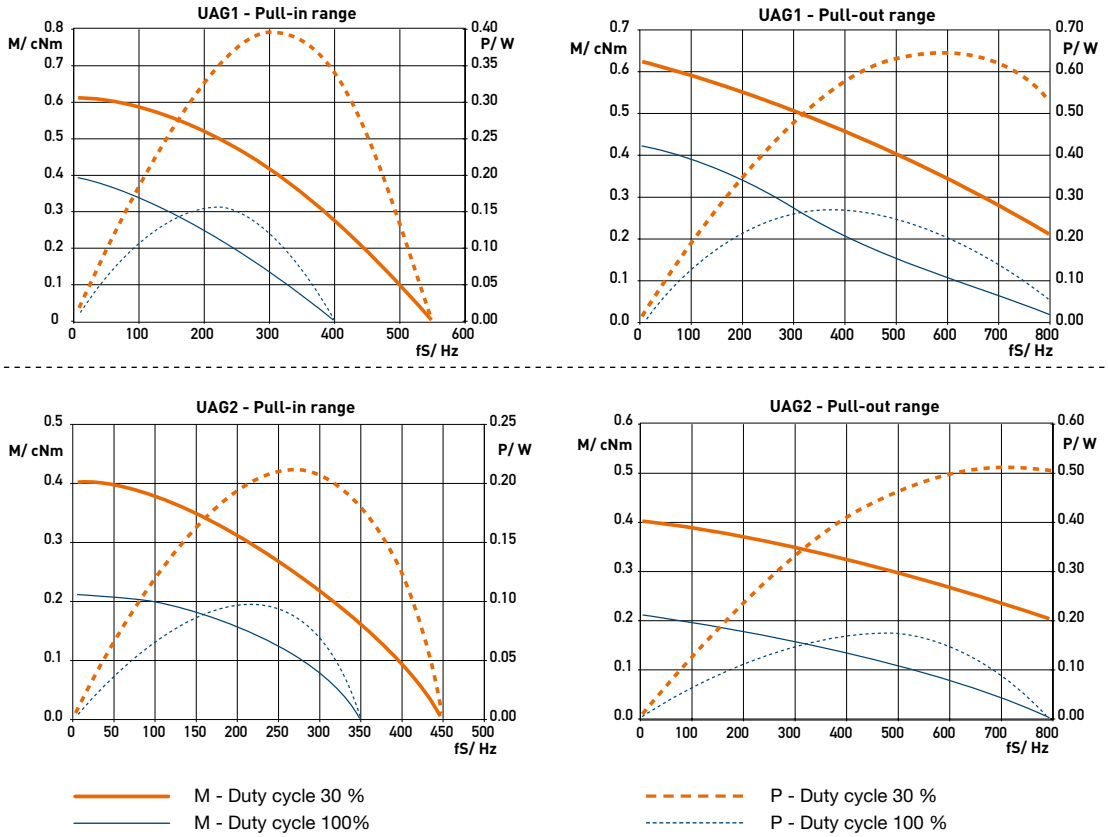

UAG3/4

Dimensions (mm)	∅ 20 x 17
Step angle (°)	18
Holding torque (mNm)	5,6 / 4,2
Detent torque (mNm)	> 0,6
Winding	bipoar/unipolar
Gear combination	on request

Standard Data

Climatic class	wide-spread according to DIN IEC 60721-2-1
Ambient temperature operation	°C -20...+60
Ambient temperature storage	°C -40...+100
Thermal resistance at f=0 R_{therm}	47 K/W
Thermal class	B according to DIN EN 60085
Approval	standard
Mounting	any position
Electrical connection	cable
Protection	IP 40 according to DIN EN 60529
Weight	22 g
Rotor stalling	motor can be stopped when voltage is applied, without being overheated
Bearings	sintered bronze, self-lubricating

Order Reference

Type	Stepper Motor	UAG	3	3	N	150 (Ω) Ω	R	E
Configuration	3 bipolar 4 unipolar							
Rotor shaft, mounting	3 centring 8 mm, mounting plate with long holes 5 centring 8 mm, mounting plate (for clipping) E centring 6 mm, mounting plate with long holes G centring 6 mm, mounting plate (for clipping)							
Approval	N Approval Standard							
Resistance	See next page Resistance per winding for bipolar or unipolar.							
Direction	reversible							
Cable	E cable 150 mm with Tyco connector CT 173977-4 1-6 (other on request)							

UAG3/4

Technical Data

bipolar (UAG3)	Rated voltage U_N	V	12
	Resistance per winding R_{20}	Ω	150
unipolar (UAG4)	Rated voltage U_N	V	12
	Resistance per winding R_{20}	Ω	150
	Steps per revolution	20	
	Duty cycle	100%	
	Winding temperature T_{max}	130° C	
	Rotor inertia J_R	0,26 gcm²	
	Holding torque M_H	0,56 cNm (UAG3) 0,42 cNm (UAG4)	
	Detent torque M_H	> 0,6 mNm	
	Direction of rotation	reversible	

Dimensions

motortype	∅D
UAG33	∅8 0 -0,05
UAG3E	∅6 0 -0,05

motortype	∅D
UAG43	∅8 0 -0,05
UAG4E	∅6 0 -0,05

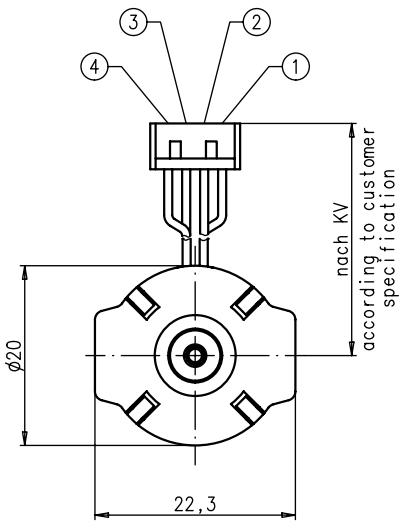

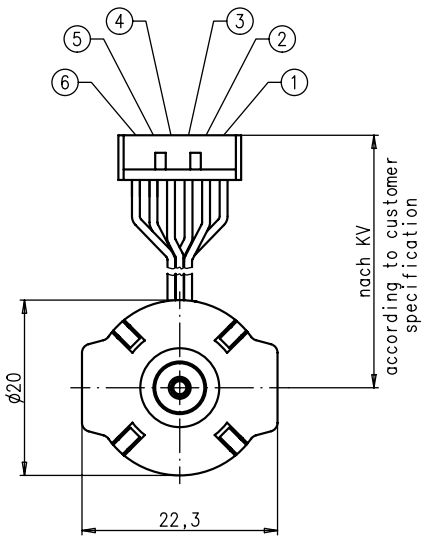

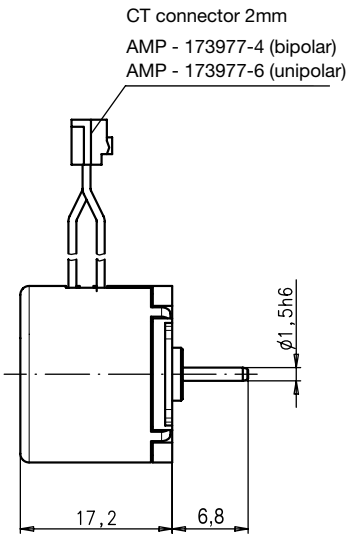

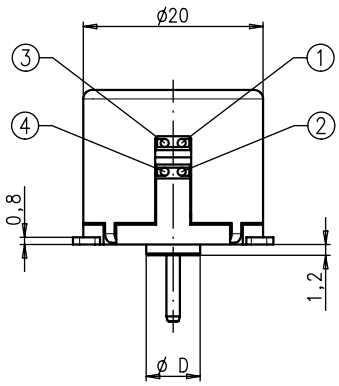

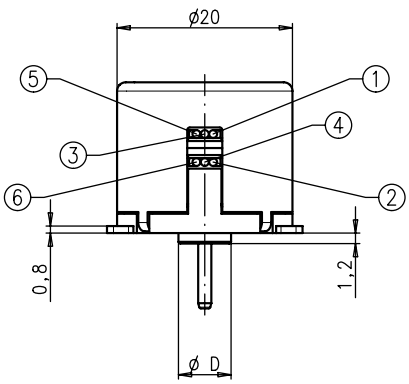

bipolar

	0	I	II	III	IV
1	+	+	-	-	+
2	+	-	-	+	+
3	-	-	+	+	-
4	-	+	+	-	-

→ clockwise rotation
← counter clockwise rotation

unipolar

	0	I	II	III	IV
1	–	–	+	+	–
2	–	+	+	–	–
3	+	+	+	+	+
4	+	+	+	+	+
5			–	–	
6		–	–		

→ clockwise rotation
← counter clockwise rotation

Performance Chart

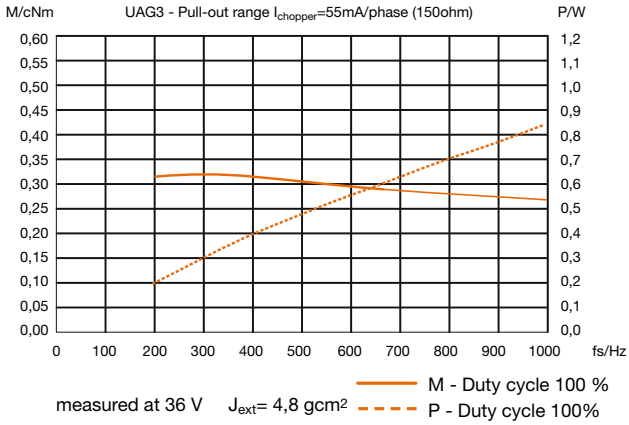

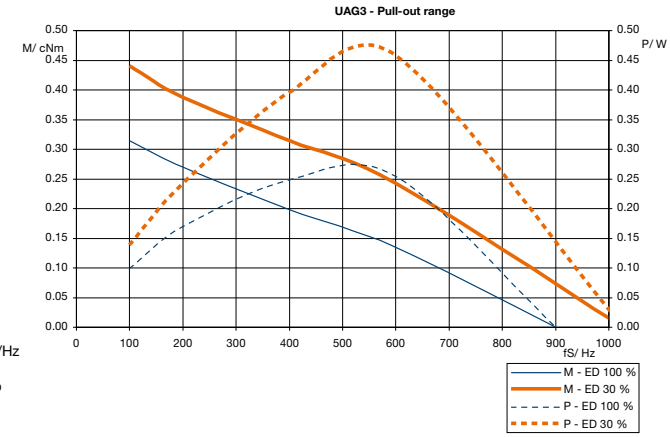

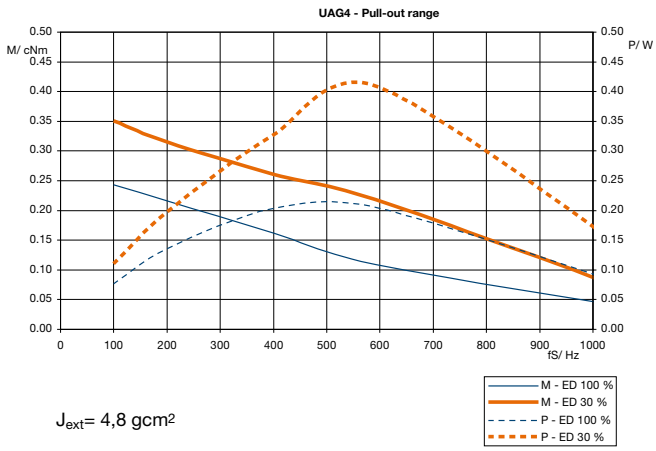

J_{ext}= 4,8 gcm²

UCD

UCD1/7; UCD2/8

Dimensions (mm)	∅ 28 x 24
Step angle (°)	7,5
Holding torque * (cNm)	1,6–2,7
Detent torque (cNm)	0,26–0,42
Winding	bipolar/unipolar
Gear combination	on request

* values for lead wire version (connection N) / connector versions up to 15 % higher

Standard Data

Climatic class	wide-spread according to DIN IEC 60721-2-1
Ambient temperature operation	°C -15 ... +60
Ambient temperature storage	°C -20 ... +100
Thermal resistance at f=0 R_{therm}	29 K/W
Thermal class	B according to DIN EN 60085
Approval	standard
Mounting	any position
Electrical connection	connector type D or N
Protection	IP 30 according to DIN EN 60529
Weight	54 g
Rotor stalling	motor can be stopped when voltage is applied, without being overheated
Bearings	Sintered bronze, self- lubricating

Order Reference

Type	Stepper Motor				UCD	1	0	N	24 Ω	R	B
Configuration	1	bipolar, standard magnet	7	bipolar, stronger magnet							
	2	unipolar, standard magnet	8	unipolar, stronger magnet							
Rotor shaft, mounting	3	centring 8 mm, shaft 2,0 mm, screw plate	E	centring 10 mm, shaft 2,0 mm, screw plate							
	4	centring 8 mm, shaft 1,5 mm, screw plate	K	centring 10 mm, shaft 1,5 mm, screw plate							
	0	centring 8 mm, shaft 2,0 mm, clip	A	centring 10 mm, shaft 2,0 mm, clip							
	1	centring 8 mm, shaft 1,5 mm, clip	C	centring 10 mm, shaft 1,5 mm, clip							
Approval	N	Approval Standard									
Resistance		see next pages; Resistance per winding for bipolar or unipolar									
Direction	R	reversible									
Connection	D	see next pages „Connection Types“									
	N										

Technical Data

bipolar			UCD1		UCD7
	Holding torque M_H *	cNm	2		2,7
	Detent torque M_S	cNm	0,26		0,42
	Rotor inertia J_R	gcm²	2,2		2,4
	Rated voltage U_N	V	6	12	24
	Resistance per winding R_{20}	Ω	24	90	380
	Steps per revolution		48		
	Duty cycle		100%		
	Direction of rotation	V	reversible		
unipolar			UCD2		UCD8
	Holding torque M_H	cNm	1,6		2,3
	Detent torque M_S	cNm	0,26		0,42
	Rotor inertia J_R	gcm²	2,2		2,4
	Rated voltage U_N	V	3	6	24
	Resistance per winding R_{20}	Ω	24	90	380
	Steps per revolution		48		
	Duty cycle		100%		
	Direction of rotation	V	reversible		

* values for lead wire version (connection N) / connector versions up to 15 % higher

Circuit diagram bipolar

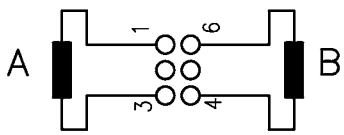

stepping sequence number

pin number	I	II	III	IV	I
1	+	+	–	–	+
3	–	–	+	+	–
4	–	+	+	–	–
6	+	–	–	+	+

→ counter clockwise rotation (step I to IV, I to IV, etc.)

← clockwise rotation (step IV to I, IV to I, etc.)

unipolar

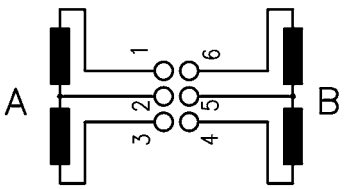

stepping sequence number

pin number	I	II	III	IV	I
1	–	–			–
2	+	+	+	+	+
3			–	–	
4		–	–		
5	+	+	+	+	+
6	–			–	–

→ counter clockwise rotation (step I to IV, I to IV, etc.)

← clockwise rotation (step IV to I, IV to I, etc.)

Dimensions Version with Connector D

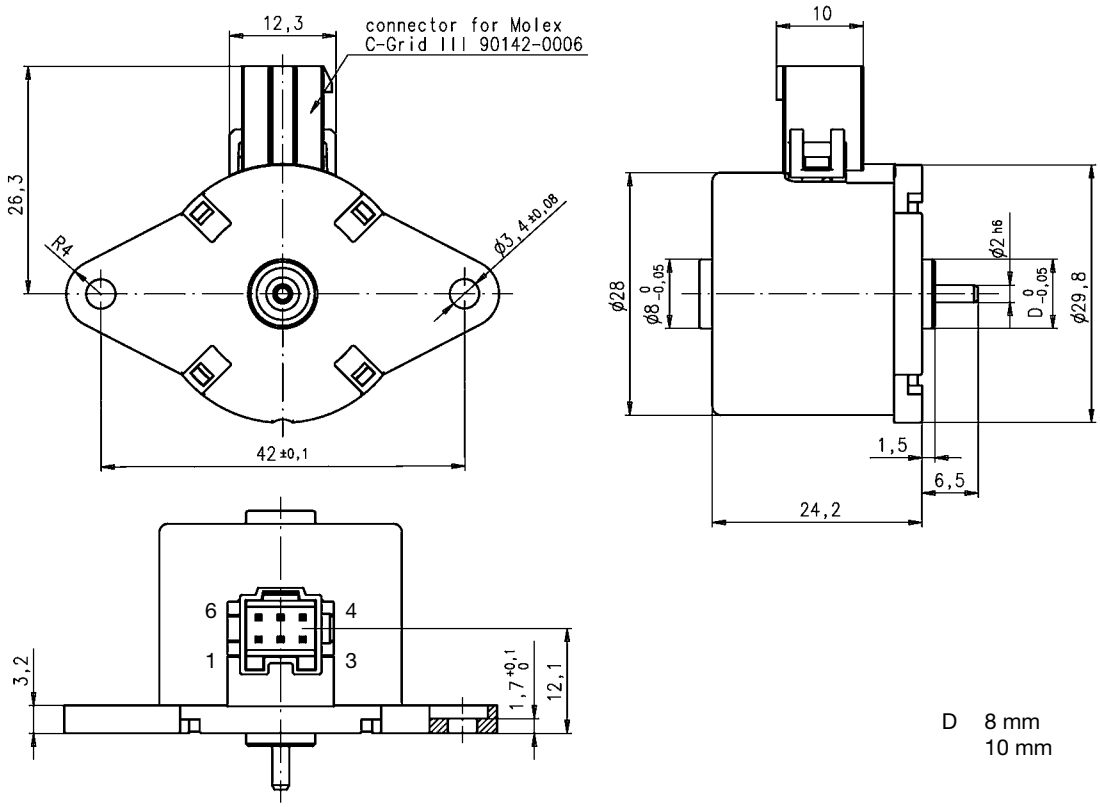

D 8 mm
10 mm

Version with Connector N

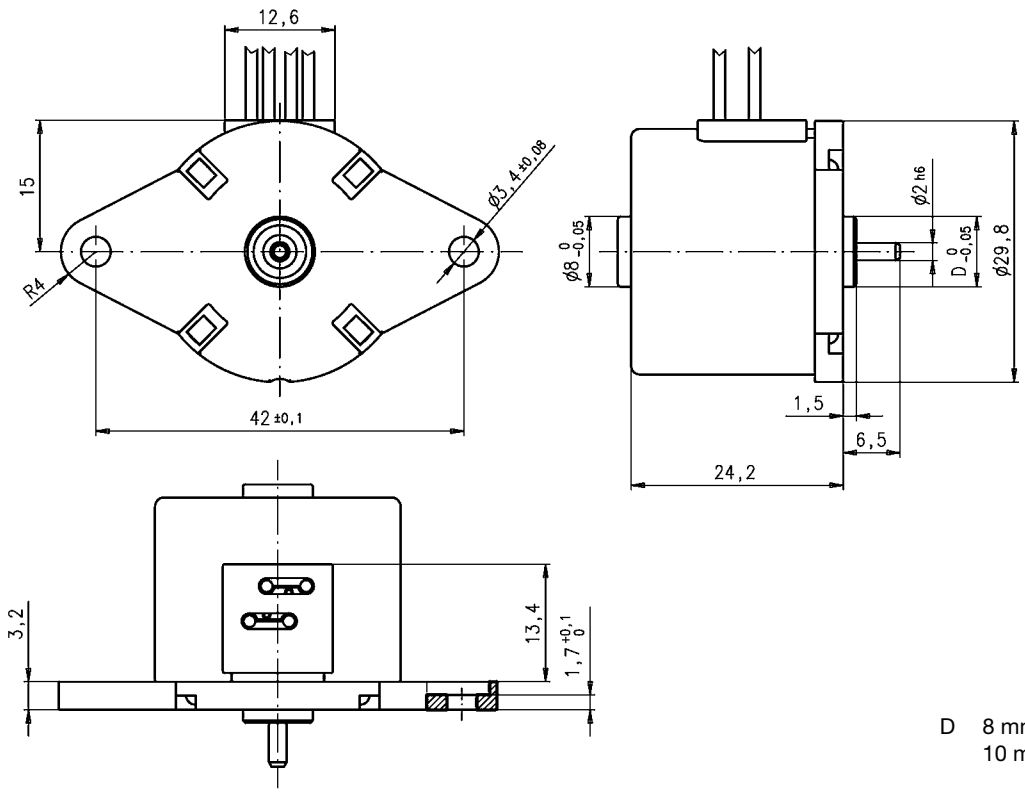

D 8 mm
10 mm

Performance Chart

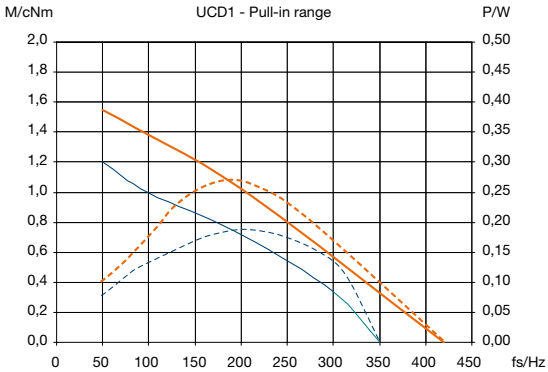

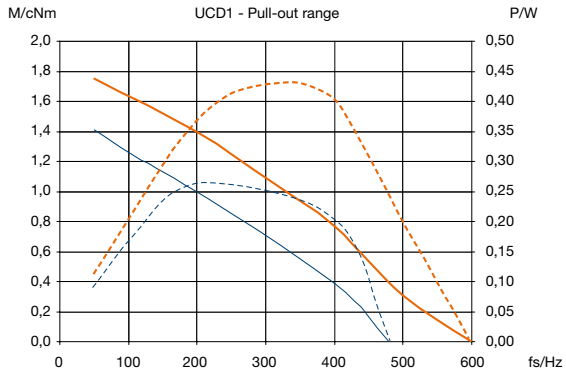

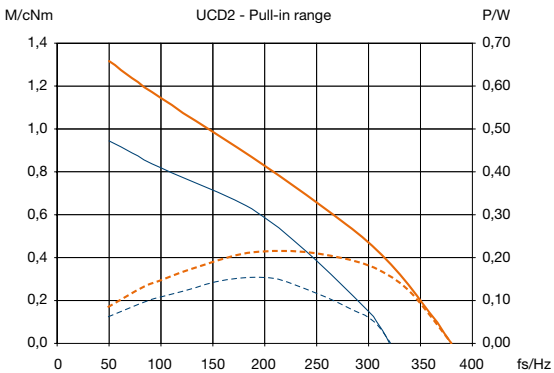

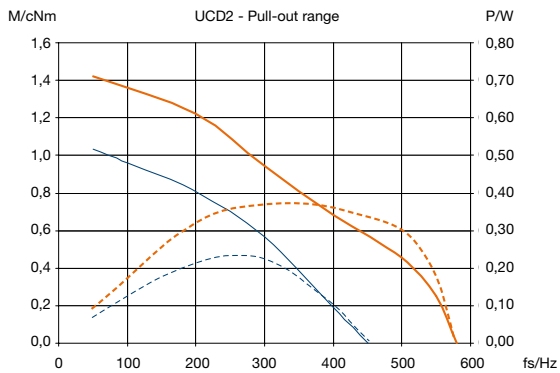

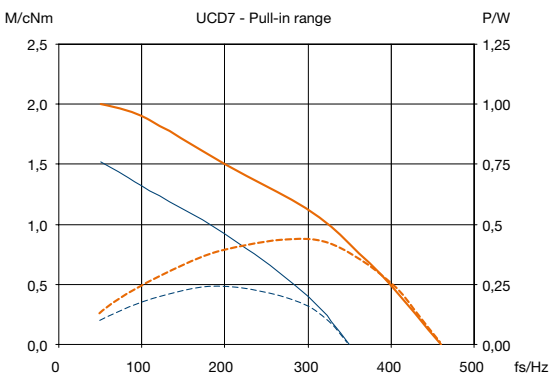

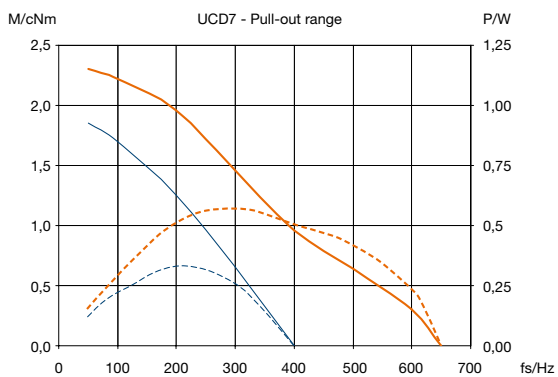

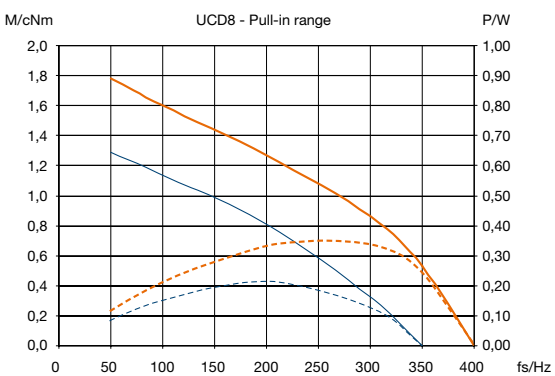

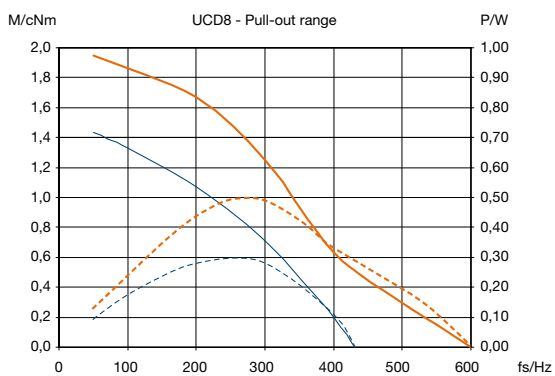

M - Duty cycle 30 %
M - Duty cycle 100%
P - Duty cycle 30 %
P - Duty cycle 100 %

UCB

UCB1/7; UCB2/8

Dimensions (mm)	∅ 28 x 24
Step angle (°)	15
Holding torque * (cNm)	1,3–2,3
Detent torque (cNm)	0,29
Winding	bipolar/unipolar
Gear combination	on request

* values for lead wire version (connection N) / connector versions up to 15 % higher

Standard Data

Climatic class	wide-spread according to DIN IEC 60721-2-1
Ambient temperature operation	°C -15 ... +60
Ambient temperature storage	°C -20 ... +100
Thermal resistance at f=0 R_{therm}	29 K/W
Thermal class	B according to DIN EN 60085
Approval	standard
Mounting	any position
Electrical connection	connector type D or N
Protection	IP 30 according to DIN EN 60529
Weight	54 g
Rotor stalling	motor can be stopped when voltage is applied, without being overheated
Bearings	Sintered bronze, self- lubricating

Order Reference

Type	Stepper Motor				UCB	1	0	N	24 Ω	R	B
Configuration	1	bipolar, standard magnet	7	bipolar, stronger magnet							
	2	unipolar, standard magnet	8	unipolar, stronger magnet							
Rotor shaft, mounting	3	centring 8 mm, shaft 2,0 mm, screw plate	E	centring 10 mm, shaft 2,0 mm, screw plate							
	4	centring 8 mm, shaft 1,5 mm, screw plate	K	centring 10 mm, shaft 1,5 mm, screw plate							
	0	centring 8 mm, shaft 2,0 mm, clip	A	centring 10 mm, shaft 2,0 mm, clip							
	1	centring 8 mm, shaft 1,5 mm, clip	C	centring 10 mm, shaft 1,5 mm, clip							
Approval	N	Approval Standard									
Resistance		see next pages; Resistance per winding for bipolar or unipolar									
Direction	R	reversible									
Connection	D	see next pages „Connection Types“									
	N										

Technical Data

bipolar			UCB1		UCB7
	Holding torque M_H *	cNm	1,7		2,3
	Detent torque M_S	cNm	0,29		0,46
	Rotor inertia J_R	gcm²	2,1		2,4
	Rated voltage U_N	V	6	12	24
	Resistance per winding R_{20}	Ω	24	90	380
	Steps per revolution		24		
	Duty cycle		100%		
	Direction of rotation	V	reversible		
unipolar			UCB2		UCB8
	Holding torque M_H *	mNm	1,3		1,8
	Detent torque M_S	mNm	0,29		0,46
	Rotor inertia J_R	gcm²	2,1		2,4
	Rated voltage U_N	V	6	12	24
	Resistance per winding R_{20}	Ω	24	90	380
	Steps per revolution		24		
	Duty cycle		100%		
	Direction of rotation	V	reversible		

* values for lead wire version (connection N) / connector versions up to 15 % higher

Circuit diagram bipolar

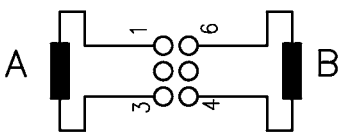

stepping sequence number

pin number	I	II	III	IV	I
1	+	+	–	–	+
3	–	–	+	+	–
4	–	+	+	–	–
6	+	–	–	+	+

→ counter clockwise rotation (step I to IV, I to IV, etc.)

← clockwise rotation (step IV to I, IV to I, etc.)

unipolar

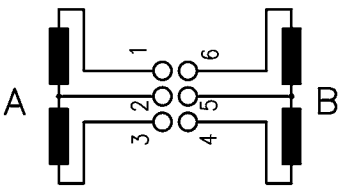

stepping sequence number

pin number	I	II	III	IV	I
1	–	–			–
2	+	+	+	+	+
3			–	–	
4		–	–		
5	+	+	+	+	+
6	–			–	–

→ counter clockwise rotation (step I to IV, I to IV, etc.)

← clockwise rotation (step IV to I, IV to I, etc.)

Dimensions Version with Connector D

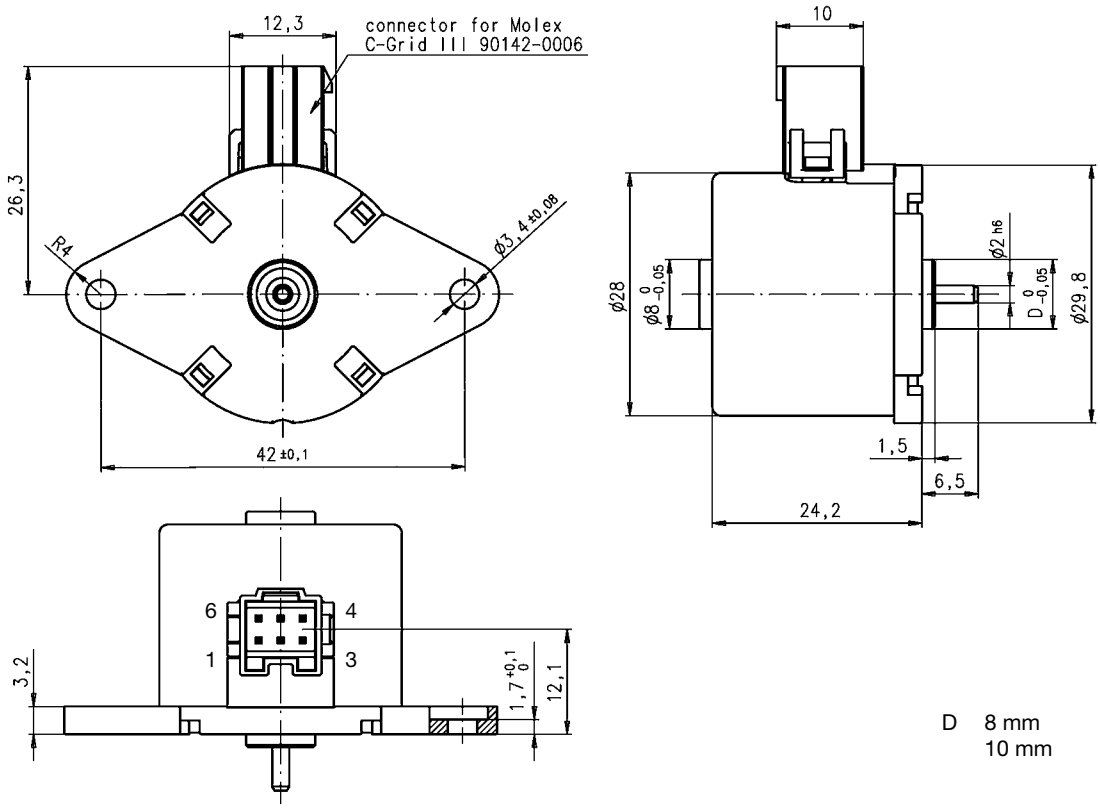

D 8 mm
10 mm

Version with Connector N

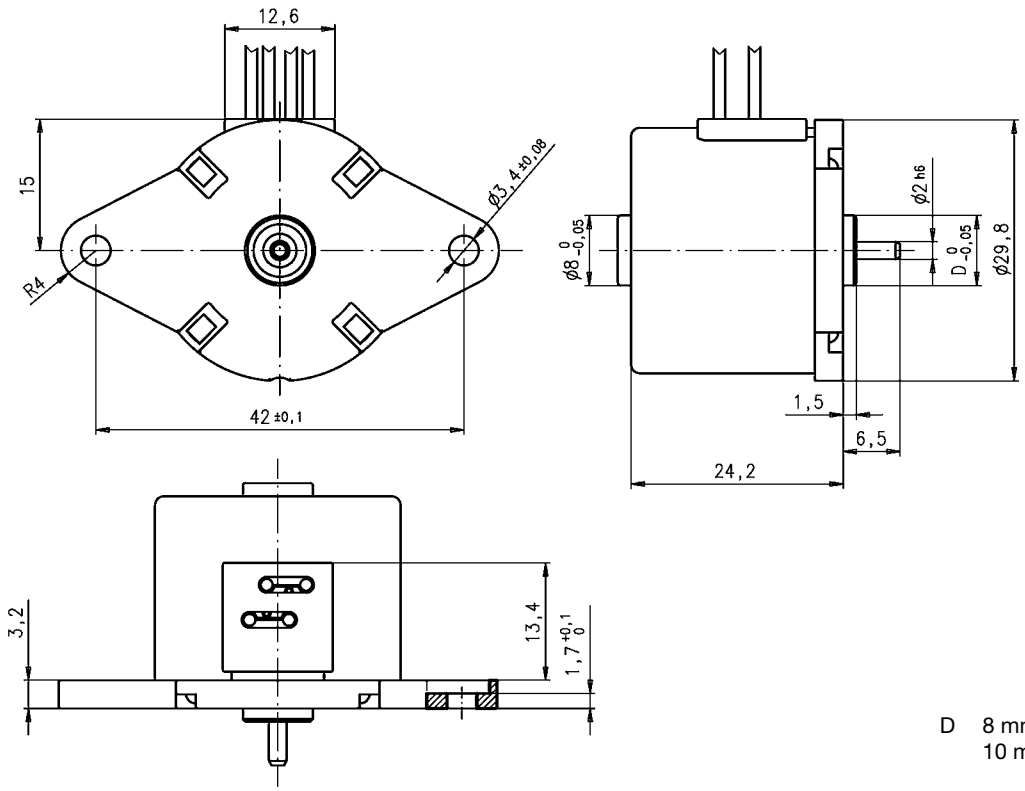

D 8 mm
10 mm

Performance Chart

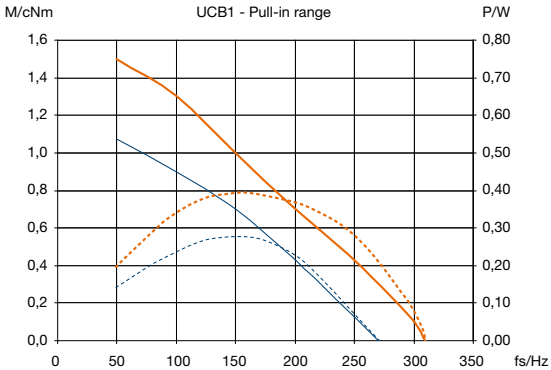

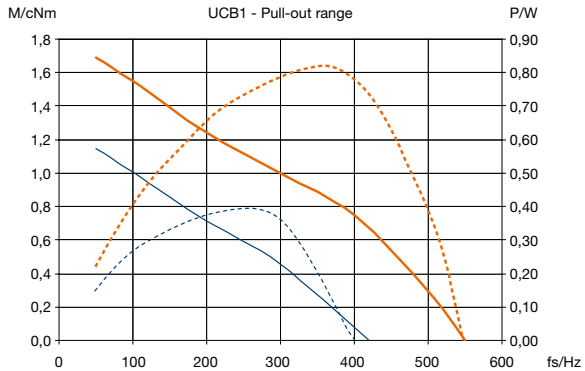

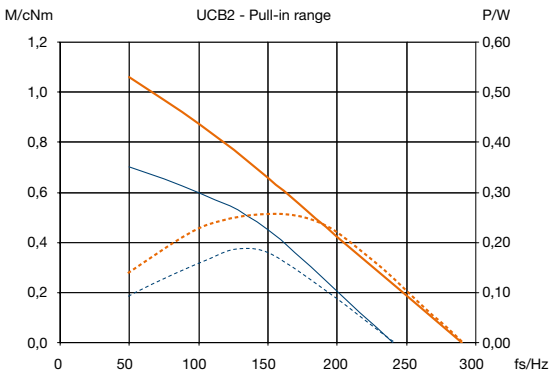

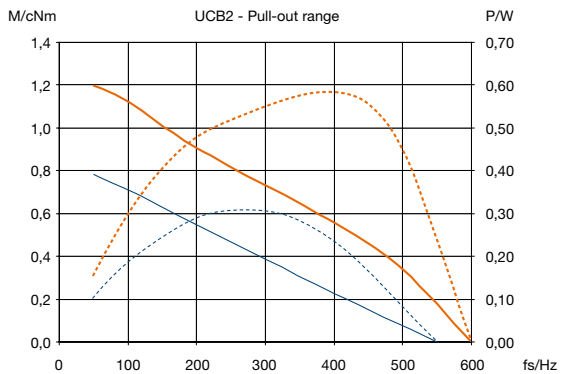

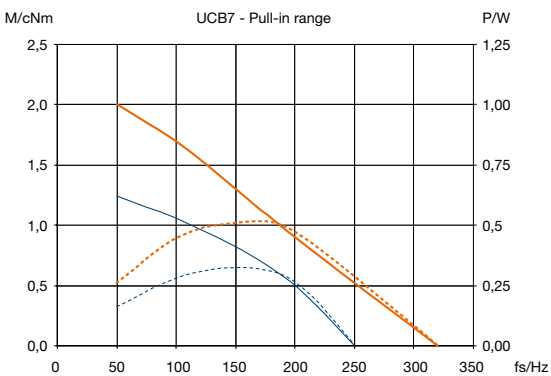

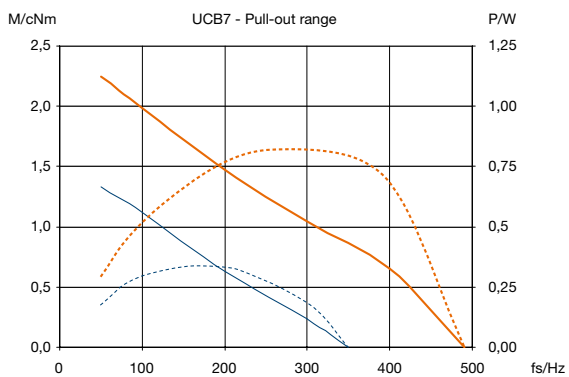

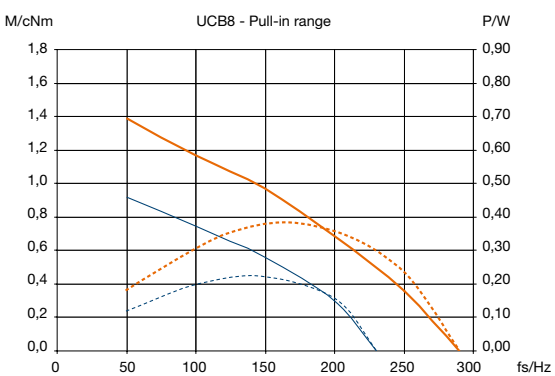

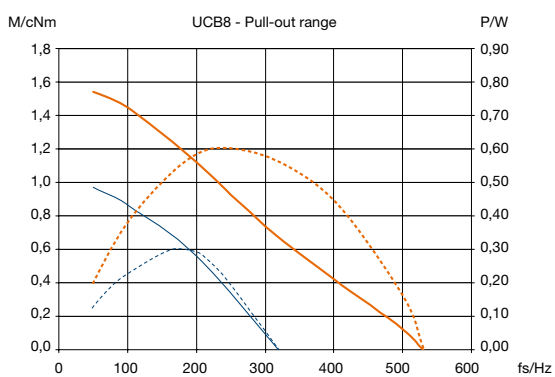

M - Duty cycle 30 %
M - Duty cycle 100%
P - Duty cycle 30 %
P - Duty cycle 100 %

UBD

UBD1/2/5/6

Dimensions (mm)	∅ 36 x 21
Step angle (°)	7.5
Holding torque (cNm)	1.3–1.9
Detent torque (cNm)	0.22/0.27
Winding	bipolar/unipolar
Gear combination	A, D, M, B, F, V

Standard Data

Climatic class	wide-spread according to DIN IEC 60721-2-1
Ambient temperature operation	°C -15...+55
Ambient temperature storage	°C -20...+100
Thermal resistance at f=0 R_{therm}	27 K/W
Thermal class	A according to DIN EN 60085
Approval	standard (UL/CSA on request)
Mounting	any position
Electrical connection	cable
Protection	IP 40 according to DIN EN 60529
Weight	60 g
Rotor stalling	motor can be stopped when voltage is applied, without being overheated
Bearings	sintered bronze, self-lubricating
Electric strength	according to DIN EN 60034-1/DIN EN 60335-1

Order Reference

Type	Stepper Motor						UBD	1	0	N	18,5	R	E
Configuration	1	bipolar, standard magnet	5	bipolar, stronger magnet									
	2	unipolar, standard magnet	6	unipolar, stronger magnet									
Rotor shaft, mounting	0	centring 8 mm, shaft 2,0 mm, clip	A	centring 10 mm, shaft 2,0 mm, clip									
	1	centring 8 mm, shaft 1,5 mm, clip	C	centring 10 mm, shaft 1,5 mm, clip									
	3	centring 8 mm, shaft 2,0 mm, screw plate	E	centring 10 mm, shaft 2,0 mm, screw plate									
	4	centring 8 mm, shaft 1,5 mm, screw plate	K	centring 10 mm, shaft 1,5 mm, screw plate									
Approval	N	Approval Standard											
Resistance		See next page	Resistance per winding for bipolar or unipolar.										
Direction		reversible											
Cable	E	cable 150 mm (other on request)											

Technical Data

bipolar (UBD1/5)	Rated voltage U_N	V	3	6	12	24
	Resistance per winding R_{20}	Ω	11,5	18,5	100	460
	Holding torque M_H	cNm	1,8 (UBD1); 1,9 (UBD5)			
	Detent torque M_S	cNm	0,22 (UBD1); 0,27 (UBD5)			
	Rotor inertia J_R	gcm²	2,8 (UBD 1), 2,9 (UBD 5)			
unipolar (UBD2/6)	Rated voltage U_N	V	3	6	12	24
	Resistance per winding R_{20}	Ω	12	28	120	500
	Holding torque M_H	cNm	1,3 (UBD2); 1,6 (UBD6)			
	Detent torque M_S	cNm	0,22 (UBD2); 0,27 (UBD6)			
	Rotor inertia J_R	gcm²	2,8 (UBD2); 2,9 (UBD6)			
	Steps per revolution	48				
	Winding temperature T_{max}	105° C				
	Duty cycle	100%				
	Direction of rotation	reversible				

Dimensions

Mounting with screw plate

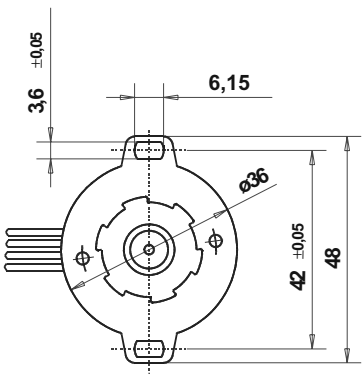

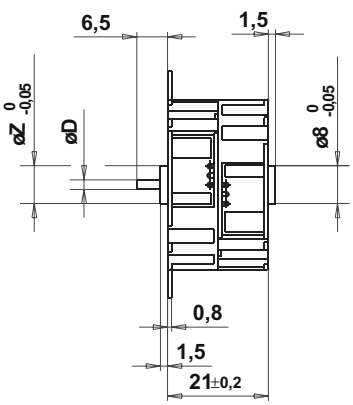

Mounting with snap on clip

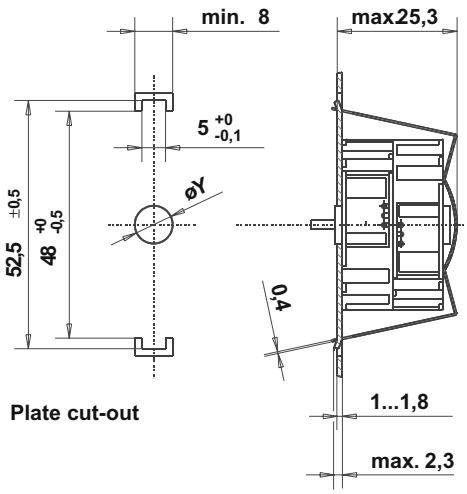

Plate cut-out

Mounting with screw plate

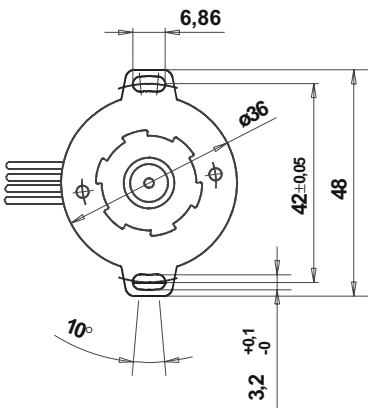

øD Rotor shaft	
ø 2 h6	
ø 1.5 js8	
øZ	øY
8	8F8
10	10F8

Performance Chart

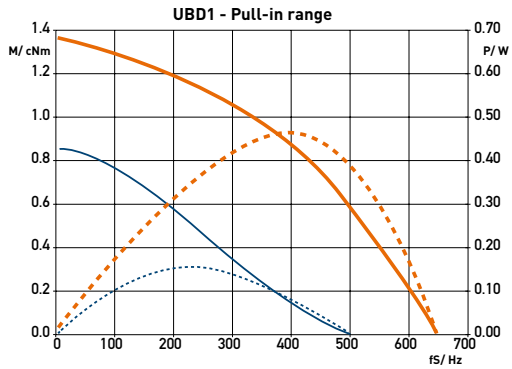

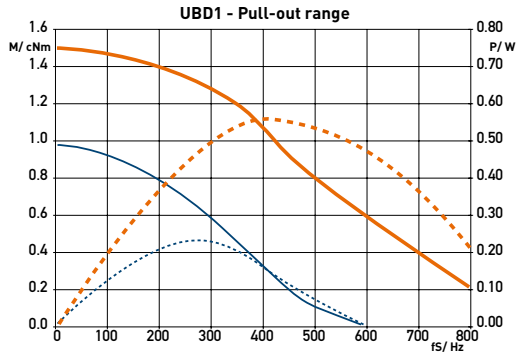

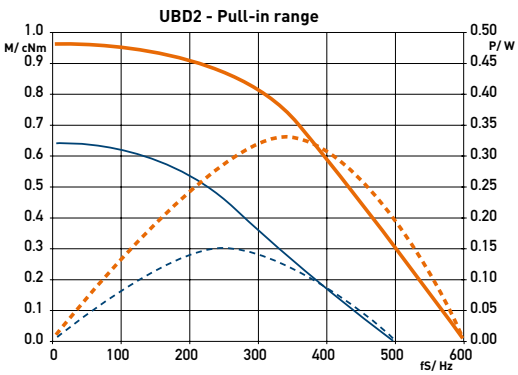

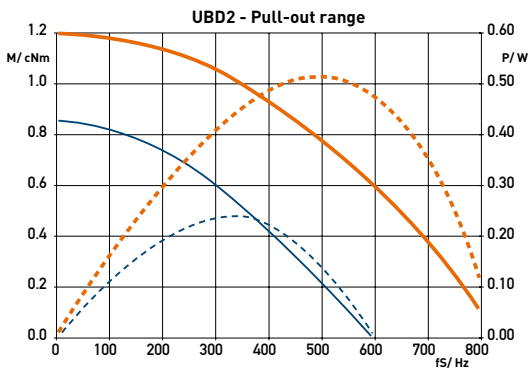

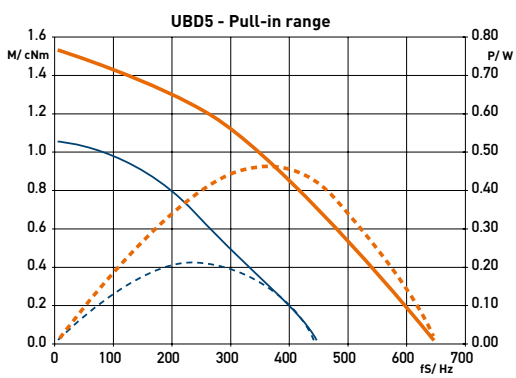

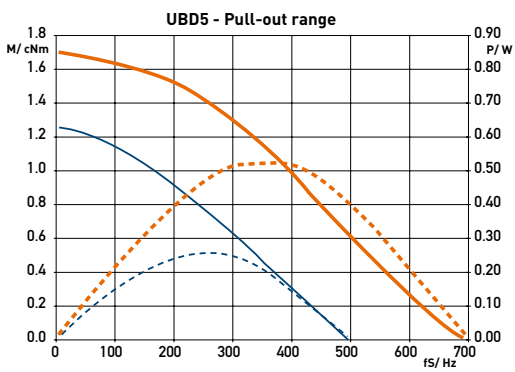

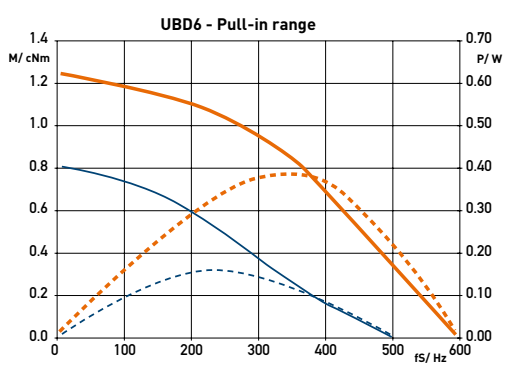

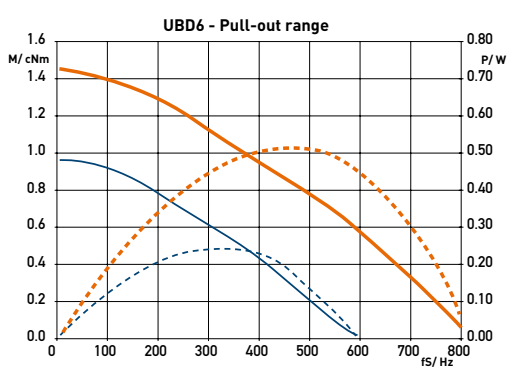

M - Duty cycle 30 %
M - Duty cycle 100%
P - Duty cycle 30 %
P - Duty cycle 100 %

UBB1/2/5/6

Dimensions (mm)	∅ 36 x 21
Step angle (°)	15
Holding torque (cNm)	1.0–1.9
Detent torque (cNm)	0.25/0.36
Winding	bipolar/unipolar
Gear combination	A, D, M, B, F, V

Standard Data

Climatic class	wide-spread according to DIN IEC 60721-2-1
Ambient temperature operation	°C -15...+55
Ambient temperature storage	°C -20...+100
Thermal resistance at f=0 R_{therm}	27 K/W
Thermal class	A according to DIN EN 60085
Approval	standard (UL/CSA on request)
Mounting	any position
Electrical connection	cable
Protection	IP 40 according to DIN EN 60529
Weight	60 g
Rotor stalling	motor can be stopped when voltage is applied, without being overheated
Bearings	sintered bronze, self-lubricating
Electric strength	according to DIN EN 60034-1/DIN EN 60335-1

Order Reference

Type	Stepper Motor						UBB	1	0	N	18,5	R	E
Configuration	1	bipolar, standard magnet	5	bipolar, stronger magnet									
	2	unipolar, standard magnet	6	unipolar, stronger magnet									
Rotor shaft, mounting	0	centring 8 mm, shaft 2,0 mm, clip	A	centring 10 mm, shaft 2,0 mm, clip									
	1	centring 8 mm, shaft 1,5 mm, clip	C	centring 10 mm, shaft 1,5 mm, clip									
	3	centring 8 mm, shaft 2,0 mm, screw plate	E	centring 10 mm, shaft 2,0 mm, screw plate									
	4	centring 8 mm, shaft 1,5 mm, screw plate	K	centring 10 mm, shaft 1,5 mm, screw plate									
Approval	N	Approval Standard											
Resistance		See next page Resistance per winding for bipolar or unipolar.											
Direction		reversible											
Cable	E	cable 150 mm (other on request)											

UBB

Technical Data

bipolar (UBB1/5)	Rated voltage U_N	V	3	6	12	24
	Resistance per winding R_{20}	Ω	11,5	18,5	100	460
	Holding torque M_H	cNm	1,5 (UBB1); 1,9 (UBB5)			
	Detent torque M_S	cNm	0,25 (UBB1); 0,36 (UBB5)			
	Rotor inertia J_R	gcm^2	2,8 (UBB1); 2,9 (UBB5)			
unipolar (UBB2/6)	Rated voltage U_N	V	3	6	12	24
	Resistance per winding R_{20}	Ω	12	28	120	500
	Holding torque M_H	cNm	1,0 (UBB2); 1,4 (UBB6)			
	Detent torque M_S	cNm	0,25 (UBB2); 0,36 (UBB6)			
	Rotor inertia J_R	gcm^2	2,8 (UBB2), 2,9 (UBB6)			
	Steps per revolution		24			
	Winding temperature T_{max}		105°C			
	Duty cycle		100%			
	Direction of rotation		reversible			

Dimensions

Mounting with screw plate

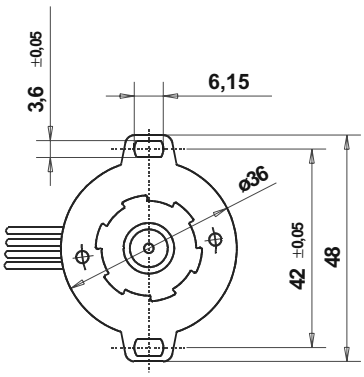

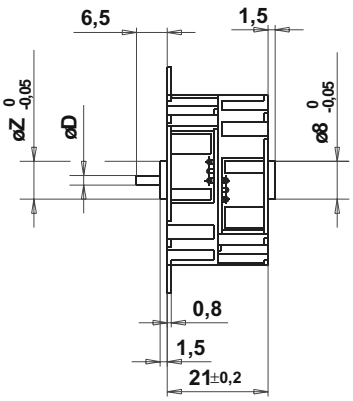

Mounting with snap on clip

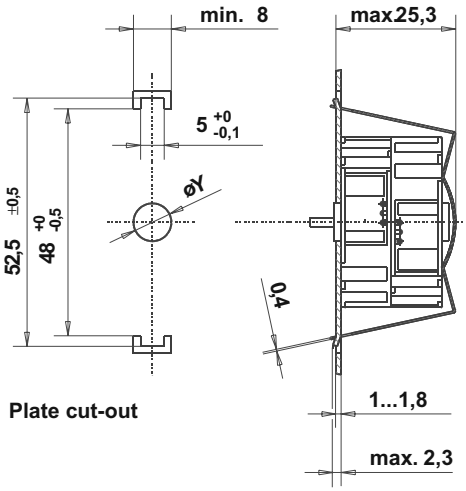

Plate cut-out

Mounting with screw plate

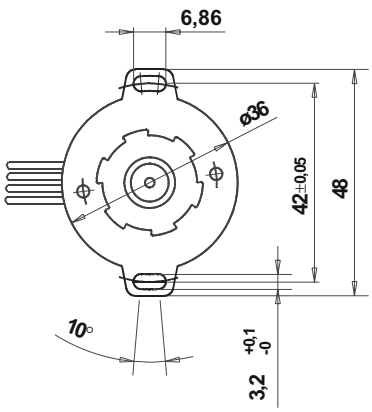

øD Rotor shaft
ø 2 h6
ø 1.5 js8

øZ	øY
8	8F8
10	10F8

Performance Chart

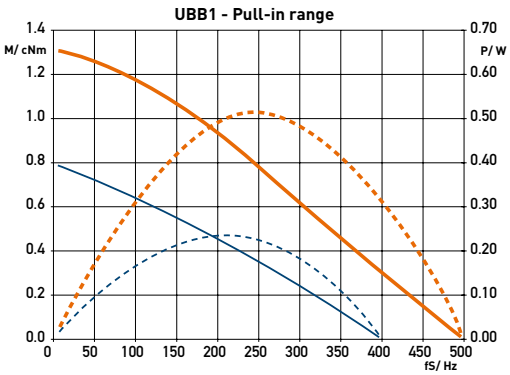

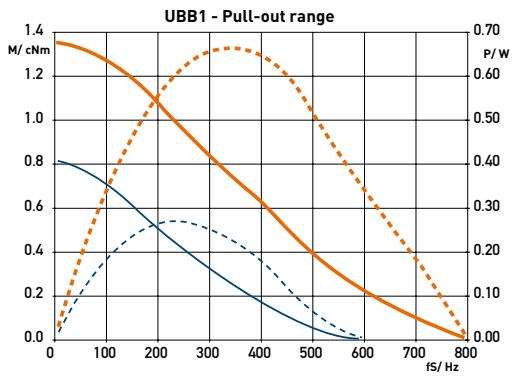

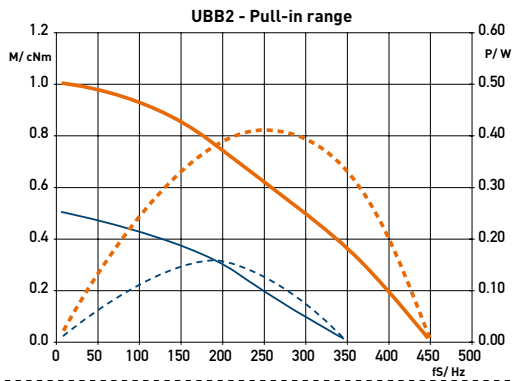

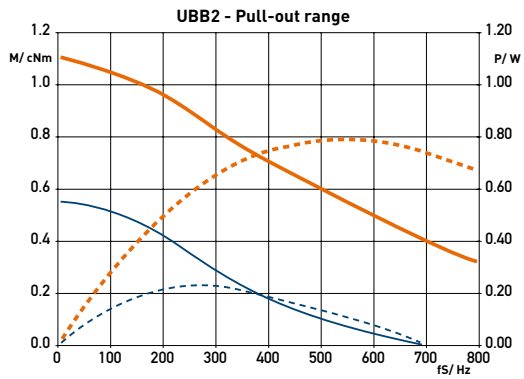

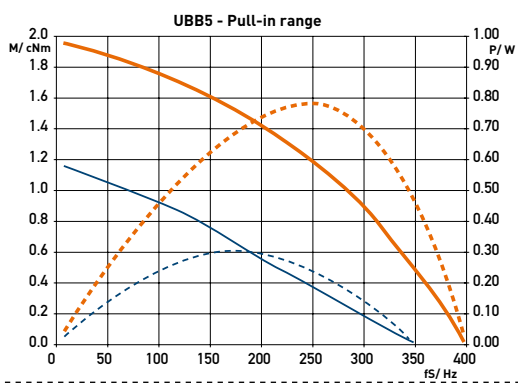

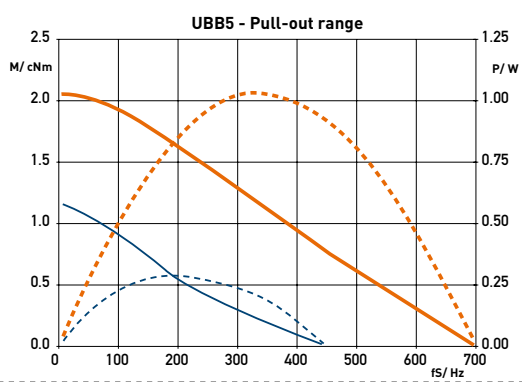

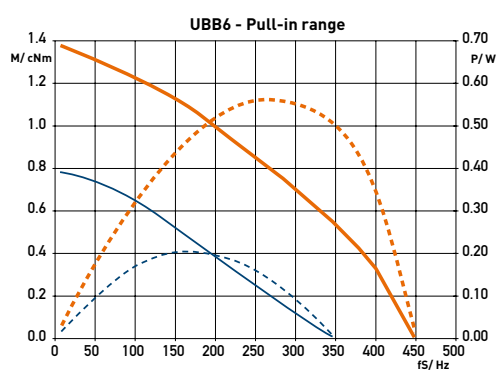

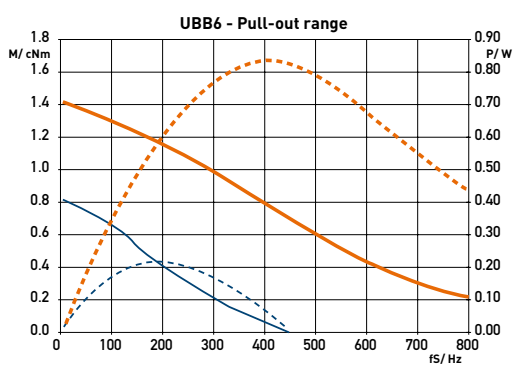

M - Duty cycle 30 %
M - Duty cycle 100%
P - Duty cycle 30 %
P - Duty cycle 100 %

UDB

UDB1/2

Dimensions (mm)	∅ 48 x 24
Step angle (°)	15
Holding torque (cNm)	2,7/2,2
Detent torque (cNm)	0.35
Winding	bipolar/unipolar
Gear combination	A, D, M, B, F, V, J

Standard Data

Climatic class	wide-spread according to DIN IEC 60721-2-1
Ambient temperature operation	°C -15...+60
Ambient temperature storage	°C -20...+100
Thermal resistance at f=0 R_{therm}	18 K/W
Thermal class	A according to DIN EN 60085
Approval	standard
Mounting	any position
Electrical connection	cable
Protection	IP 40 according to DIN EN 60529
Weight	132 g
Rotor stalling	motor can be stopped when voltage is applied, without being overheated
Bearings	sintered bronze, self-lubricating
Electric strength	according to DIN EN 60034-1/DIN EN 60335-1

Order Reference

Type	Stepper Motor	UDB	1	0	N	78	R	N	
Configuration	1 bipolar 2 unipolar								
Rotor shaft, mounting	0 centring 8 mm, shaft 1,5 mm, clip 1 centring 8 mm, shaft 2,0 mm, clip								
Approval	N Approval Standard								
Resistance	See next page Resistance per winding for bipolar or unipolar.								
Direction	reversible								
Cable	N cable 150 mm (other on request)								

Technical Data

bipolar (UDB1)	Rated voltage U_N	V	6	12	24
	Resistance per winding R_{20}	Ω	15	78	350
	Holding torque M_H	cNm	2,7		
	Detent torque M_S	cNm	0,35		
	Rotor inertia J_R	gcm^2	6,3		
unipolar (UDB2)	Rated voltage U_N	V	6	12	24
	Resistance per winding R_{20}	Ω	19	75	300
	Holding torque M_H	cNm	2,2		
	Detent torque M_S	cNm	0,35		
	Rotor inertia J_R	gcm^2	6,3		
	Steps per revolution		24		
	Winding temperature T_{max}		105° C		
	Duty cycle		100%		
	Direction of rotation		reversible		

Dimensions

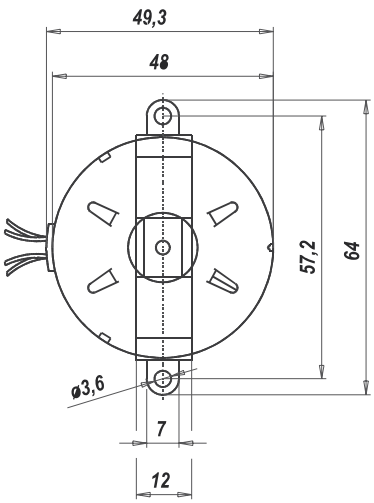

Mounting with screw clip

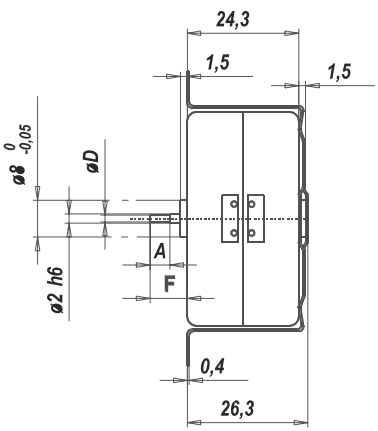

Mounting with snap-on clip

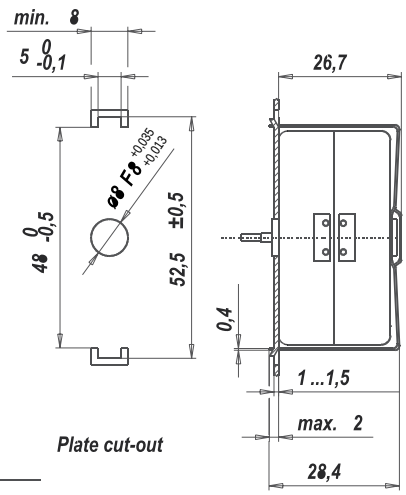

øD Rotor shaft	Dimension A	Dimension F
1,5js8 +0,007 -0,007	4,3	6,5
2h6 0 -0,006	—	8,2

Performance Chart

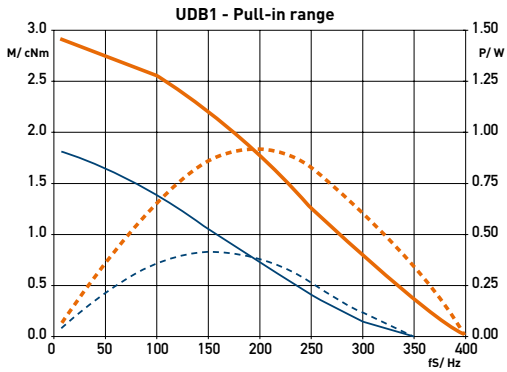

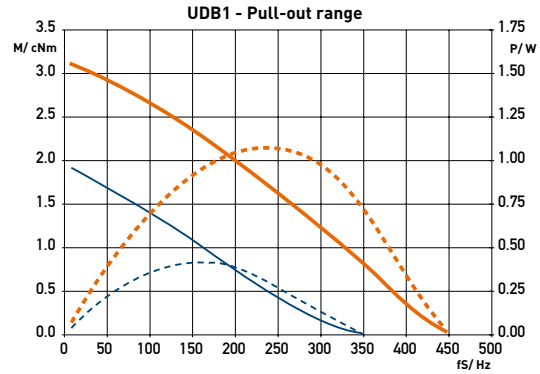

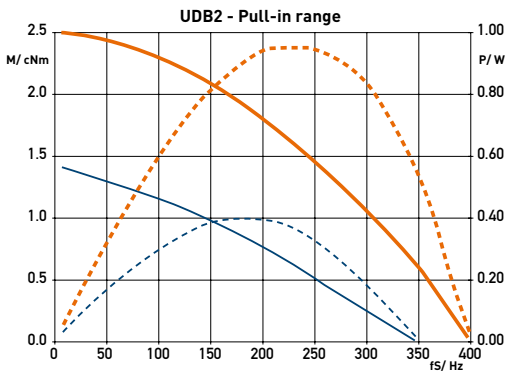

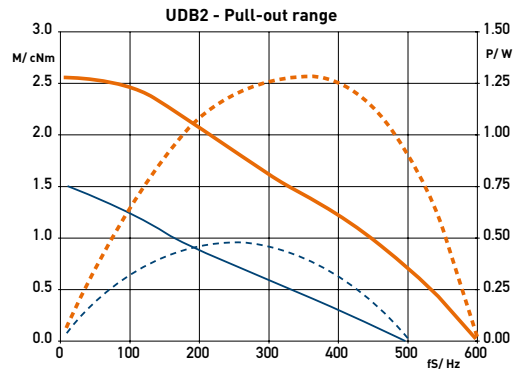

M - Duty cycle 30 %
M - Duty cycle 100%
P - Duty cycle 30 %
P - Duty cycle 100 %

UO (ST5021; ST5022)

Dimensions (mm)	∅ 50 x 21
Step angle (°)	7,5/11,25
Holding torque (cNm)	3,7–4 (ST5021); 4 (ST5022)
Detent torque (cNm)	0,25 (ST5021); 1 (ST5022)
Winding	bipolar
Gear combination	O, P, R

Standard Data

Climatic class	wide-spread according to DIN IEC 60721-2-1
Ambient temperature operation	°C -15 ... +40
Ambient temperature storage	°C -20 ... +100
Thermal class	B (ST5021); A (ST5022) according to DIN EN 60085
Approval	standard
Mounting	any position
Electrical connection	cable
Protection	IP 30 according to DIN EN 60529
Weight	180 g (ST5021); 195 g (ST5022)
Rotor stalling	motor can be stopped when voltage is applied, without being overheated
Bearings	Sintered bronze, self- lubricating

Order Reference

Type	Stepper Motor	ST5021 / ST5022	7,5°	7 Ω
Step angle	7,5° 11,25°			
Resistance	7 Ω			

Technical Data

ST5021	Step angle	°	7,5	11,25
	Rated voltage U_N	V	4	4
	Holding torque M_H	cNm	4	3,7
	Detent torque M_S	cNm	0,25	
	Rotor inertia J_R	gcm²	14,5	
	Winding temperature increase	K	65	
	Current per winding	A	0,53	
	Resistance per winding R_{20}	Ω	7	
	Inductance per winding	mH	12,5	11,5
	Power consumption	W	4	
	Driver mode		Chopper drive	
ST5022	Step angle	°	7,5/11,25	
	Rated voltage U_N	V	4	
	Holding torque M_H	cNm	7,5	
	Detent torque M_S	cNm	1	
	Rotor inertia J_R	gcm²	25	
	Winding temperature increase	K	65	
	Current per winding	A	0,53	
	Resistance per winding R_{20}	Ω	7	
	Inductance per winding	mH	11	
	Power consumption	W	4	
	Driver mode		Chopper drive	

Circuit diagram Motor connections - bipolar

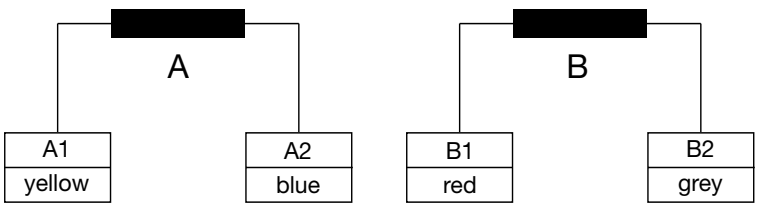

		clockwise rotation				
A	A1/A2	↓	↑	↑	↓	↓
B	B1/B2	↑	↑	↓	↓	↑

Dimensions

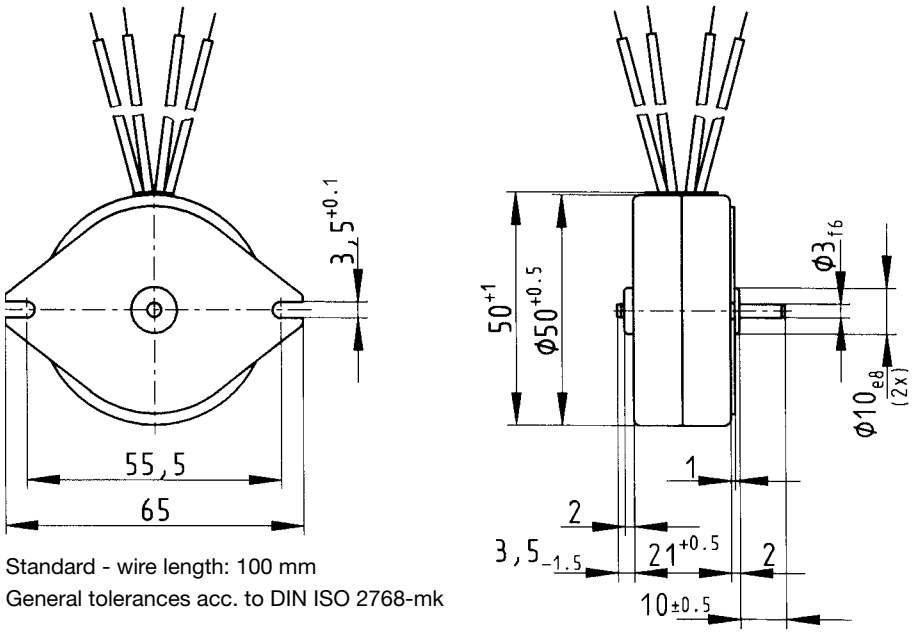

Standard - wire length: 100 mm
General tolerances acc. to DIN ISO 2768-mk

Performance Chart (chopper driver)

ST5021 UOD1 (ST 5021/7,5/1)

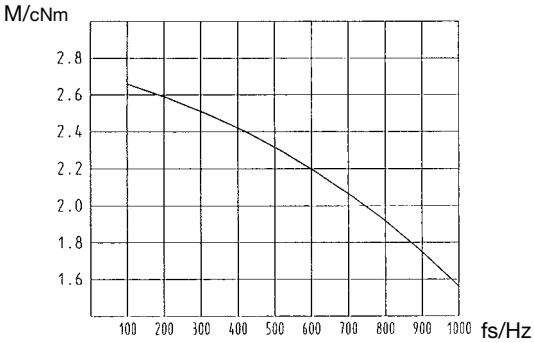

UOJ1 (ST 5021/11,25/1)

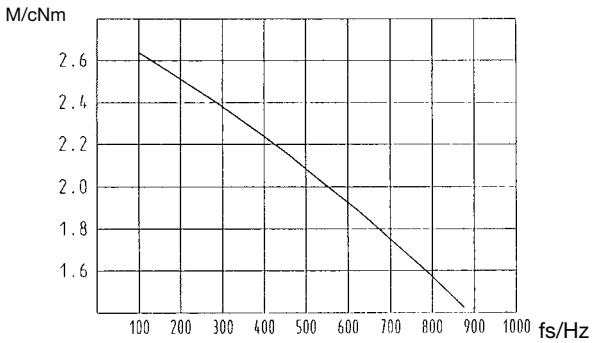

ST5022 UOD5 (ST 5022/7,5/1)

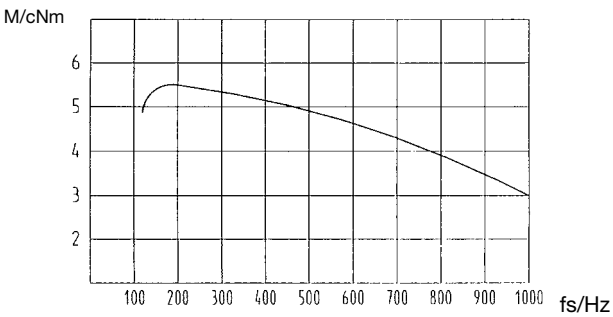

UOJ5 (ST 5022/11,25/1)

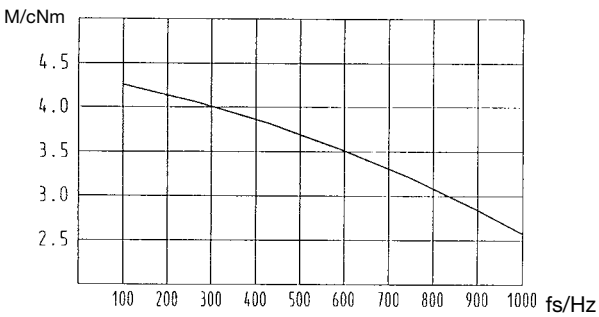

UFD

UFD1/2

Dimensions (mm)	∅ 52 x 28
Step angle (°)	7.5
Holding torque (cNm)	6,4/6,4
Detent torque (cNm)	0.45
Winding	bipolar/unipolar
Gear combination	A, D, M, B, F, V, J, O

Standard Data

Climatic class	wide-spread according to DIN IEC 60721-2-1
Ambient temperature operation	°C -15...+55
Ambient temperature storage	°C -20...+100
Thermal resistance at f=0 R_{therm}	13 K/W
Thermal class	A according to DIN EN 60085 (B on request)
Approval	standard (UL/CSA on request)
Mounting	any position
Electrical connection	cable
Protection	IP 30 according to DIN EN 60529
Weight	180 g
Rotor stalling	motor can be stopped when voltage is applied, without being overheated
Bearings	sintered bronze, self-lubricating
Electric strength	according to DIN EN 60034-1/DIN EN 60335-1

Order Reference

Type	Stepper Motor						UFD	1	0	N	52	R	N
Configuration	1	bipolar, two coils											
	2	unipolar, two coils											
Rotor shaft, mounting	0	centring 8 mm, shaft 3,0 mm, clip		E	centring 10 mm, shaft 3,0 mm, screw plate								
	1	centring 8 mm, shaft 2,0 mm, clip		K	centring 10 mm, shaft 2,0 mm, screw plate								
	2	centring 8 mm, shaft 1,5 mm, clip		M	centring 10 mm, shaft 1,5 mm, screw plate								
	3	centring 8 mm, shaft 3,0 mm, screw plate											
	4	centring 8 mm, shaft 2,0 mm, screw plate											
	5	centring 8 mm, shaft 1,5 mm, screw plate											
Approval	N	Approval Standard											
Resistance		See next page	Resistance per winding for bipolar or unipolar.										
Direction		reversible											
Cable	E	cable 150 mm (other on request)											

Technical Data

bipolar (UFD1)	Rated voltage U_N	V	6	12	24
	Resistance per winding R_{20}	Ω	9,5	52	250
	Holding torque M_H	cNm	6,4		
	Detent torque M_S	cNm	0,45		
	Rotor inertia J_R	gcm^2	14,4		
unipolar (UFD2)	Rated voltage U_N	V	6	12	24
	Resistance per winding R_{20}	Ω	15	61	251
	Holding torque M_H	cNm	4,6		
	Detent torque M_S	cNm	0,45		
	Rotor inertia J_R	gcm^2	14,4		
	Steps per revolution		48		
	Winding temperature T_{max}		105° C		
	Duty cycle		100%		
	Direction of rotation		reversible		
	Rotor shaft		3, ∅ D = 3h6, Dim. A = „-”		

Dimensions

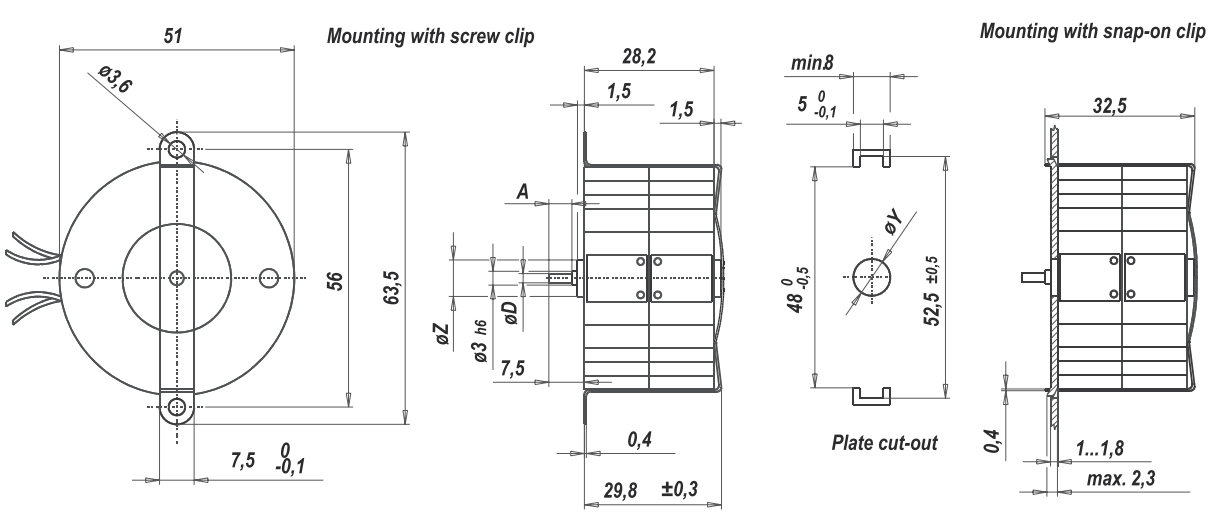

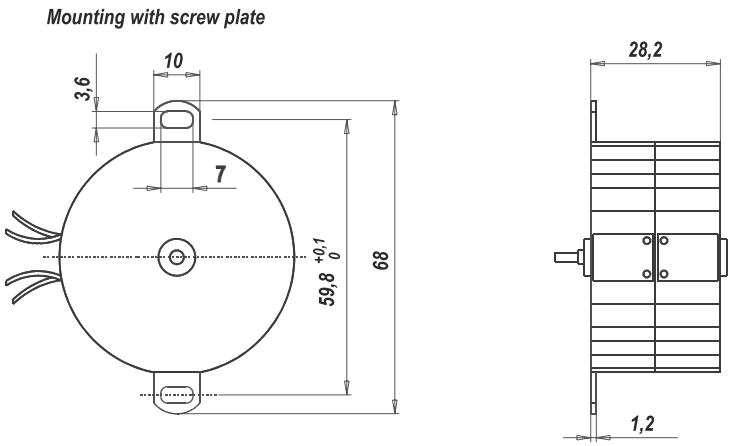

øRotor-shaft	øD	Dim. A
1,5	1,5js8	5
2	2js8	5
3	3h6	–

Type	øZ	øY
UFD	8 0 -0,05	8F8
	10 0 -0,05	10F8

Performance Chart

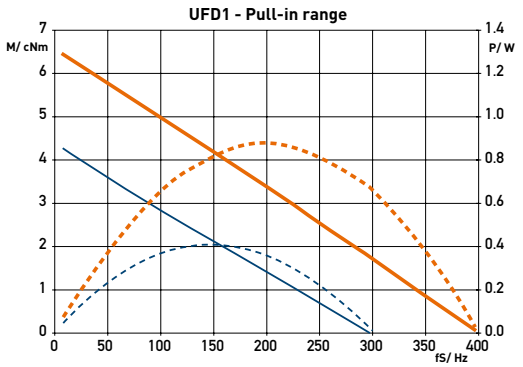

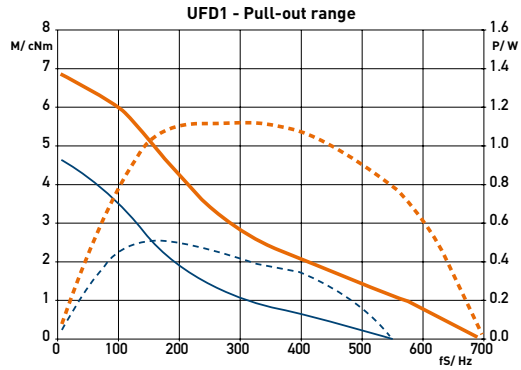

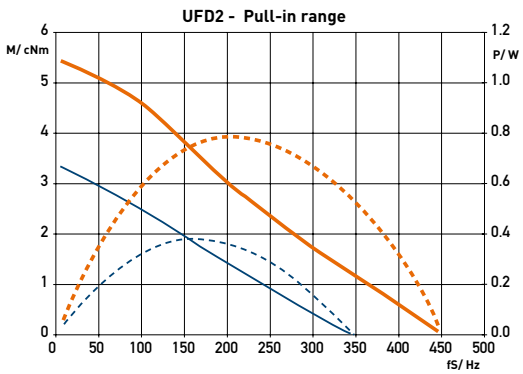

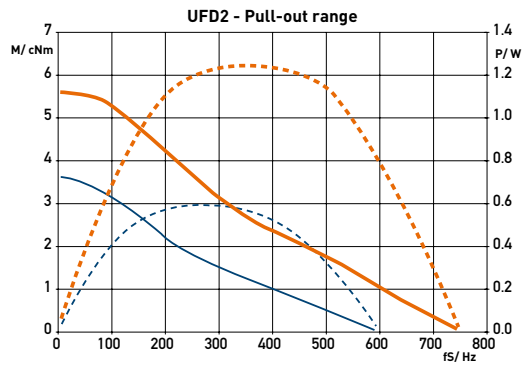

M - Duty cycle 30 %
M - Duty cycle 100%
P - Duty cycle 30 %
P - Duty cycle 100 %

UFB1/2; UFB3/4

Dimensions (mm)	∅ 52 x 28 / ∅ 52 x 56
Step angle (°)	15
Holding torque (cNm)	4,3–5,5 (UFB1/2); 7,6–10,4 (UFB3/4)
Detent torque (cNm)	0.45 (UFB1/2); 0,8 (UFB3/4)
Winding	bipolar/unipolar
Gear combination	A, D, M, B, F, V, J, O

Standard Data

Climatic class	wide-spread according to DIN IEC 60721-2-1
Ambient temperature operation	°C -15...+55
Ambient temperature storage	°C -20...+100
Thermal resistance at f=0 R_{therm}	11 K/W (UFB1/2), 7 K/W (UFB3/4)
Thermal class	A according to DIN EN 60085 (B on request)
Approval	standard (UL/CSA on request)
Mounting	any position
Electrical connection	cable
Protection	IP 30 according to DIN EN 60529
Weight	180 g (UFB1/2), 350 g (UFB3/4)
Rotor stalling	motor can be stopped when voltage is applied, without being overheated
Bearings	sintered bronze, self-lubricating
Electric strength	according to DIN EN 60034-1/DIN EN 60335-1

Order Reference

Type	Stepper Motor				UFB	1	0	N	52 Ω	R	N
Configuration	1	bipolar, two coils	3	bipolar, four coils							
	2	unipolar, two coils	4	unipolar, four coils							
Rotor shaft, mounting	0	centring 8 mm, shaft 3,0 mm, clip	E	centring 10 mm, shaft 3,0 mm, screw plate *							
	1	centring 8 mm, shaft 2,0 mm, clip	K	centring 10 mm, shaft 2,0 mm, screw plate *							
	2	centring 8 mm, shaft 1,5 mm, clip	M	centring 10 mm, shaft 1,5 mm, screw plate *							
	3	centring 8 mm, shaft 3,0 mm, screw plate *	A	centring 12 mm, shaft 3,0 mm, clip							
	4	centring 8 mm, shaft 2,0 mm, screw plate *									
	5	centring 8 mm, shaft 1,5 mm, screw plate *									
Approval	N	Approval Standard									
Resistance		See next page Resistance per winding for bipolar or unipolar.									
Direction		reversible									
Cable	N	cable 150 mm (other on request)									

* screw plate not for UFB3 and UFB4

Technical Data

bipolar (UFB1/3)	Rated voltage U_N	V	6	12	24
	Resistance per winding R_{20} (UFB1)	Ω	9,5	52	250
	Resistance per winding R_{20} (UFB3)	Ω	5	25,5	125
	Holding torque M_H	cNm	5,5 (UFB1);10,4 (UFB3)		
	Detent torque M_S	cNm	0,46 (UFB1); 0,8 (UFB3)		
	Rotor inertia J_R	gcm^2	14,2 (UFB1); 24,2 (UFB3)		
unipolar (UFB2/4)	Rated voltage U_N	V	6	12	24
	Resistance per winding R_{20} (UFB2)	Ω	15	61	251
	Resistance per winding R_{20} (UFB4)	Ω	7,5	30,5	125
	Holding torque M_H	cNm	4,3 (UFB2); 7,6 (UFB4)		
	Detent torque M_S	cNm	0,46 (UFB2); 0,8 (UFB4)		
	Rotor inertia J_R	gcm^2	14,2 (UFB2); 24,2 (UFB4)		
	Steps per revolution	24			
	Duty cycle	100%			
	Winding temperature T_{max}	105° C			
	Direction of rotation	reversible			

Dimensions

UFB1/2

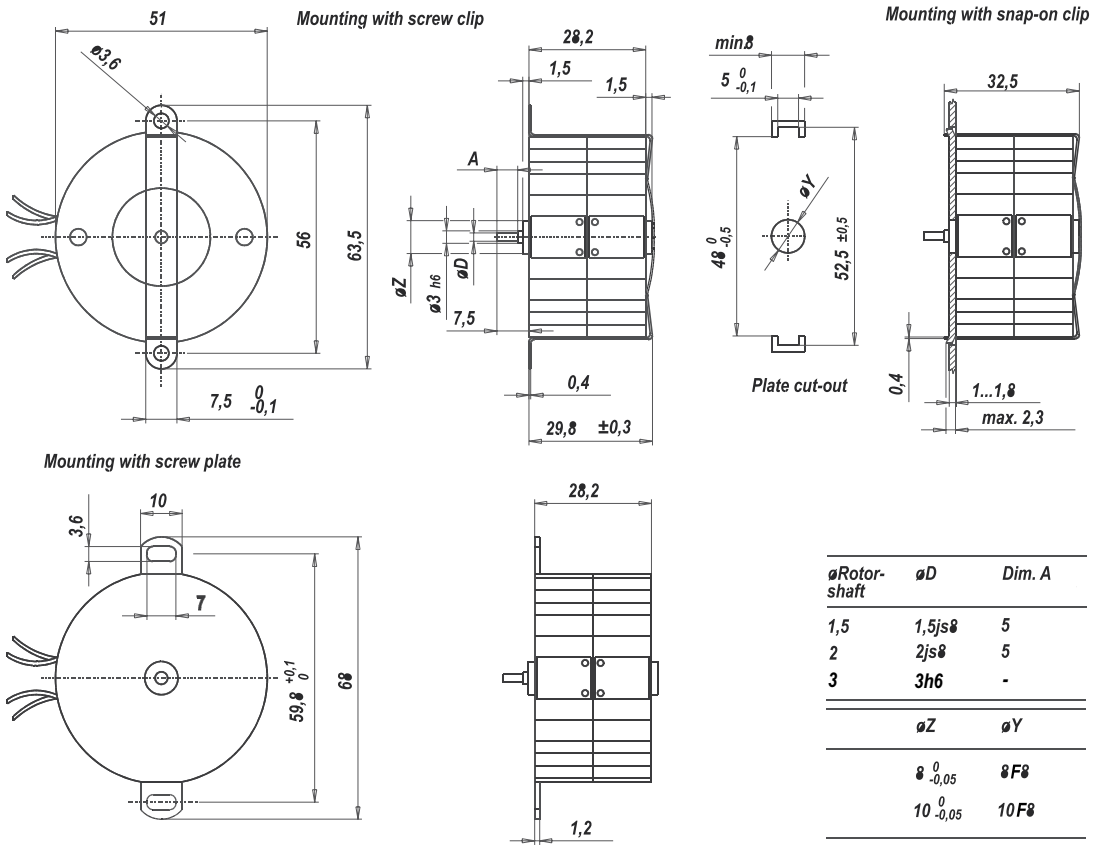

øRotor-shaft	øD	Dim. A
1,5	1,5js8	5
2	2js8	5
3	3h6	-

øZ	øY
8 0 -0,05	8F8
10 0 -0,05	10F8

UFB3/4

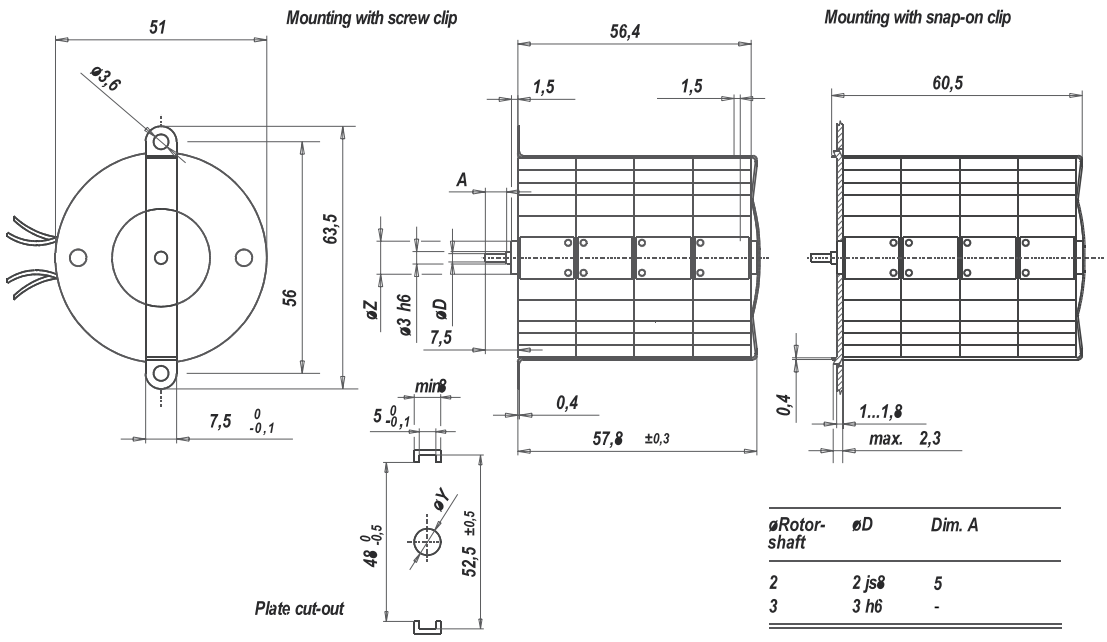

øRotor-shaft	øD	Dim. A
2	2 js8	5
3	3 h6	-

øZ	øY
8 0 -0.05	8F8
10 0 -0.05	10F8

Performance Chart

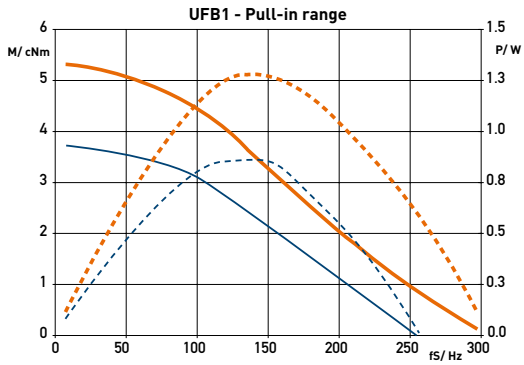

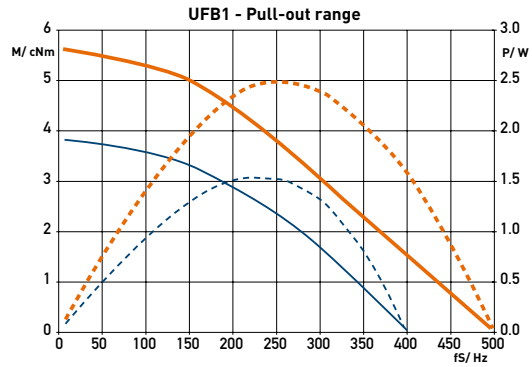

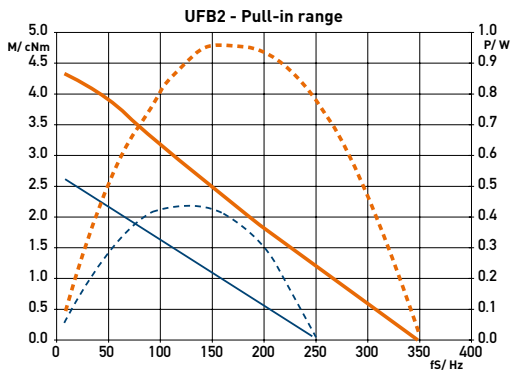

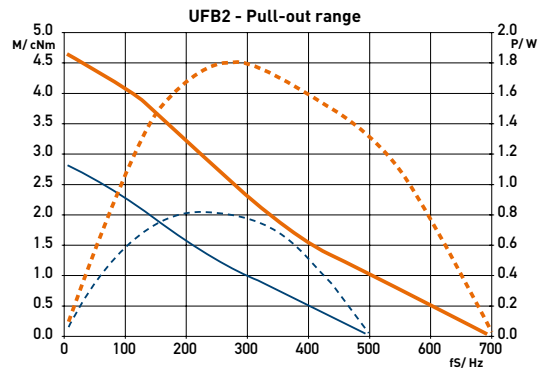

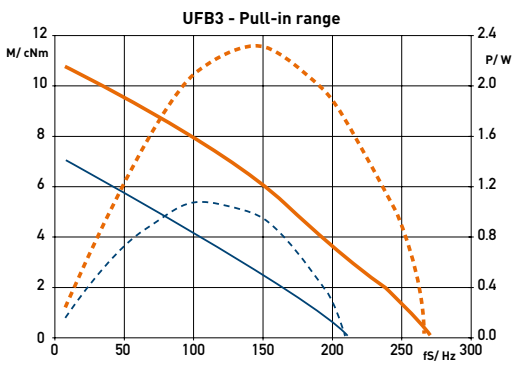

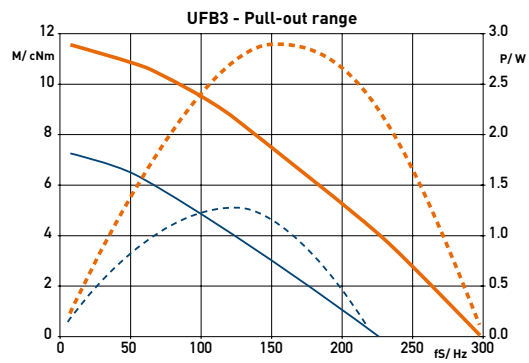

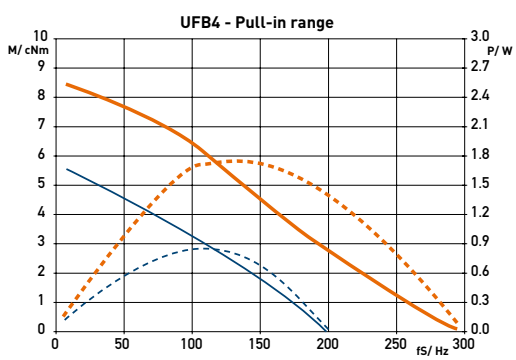

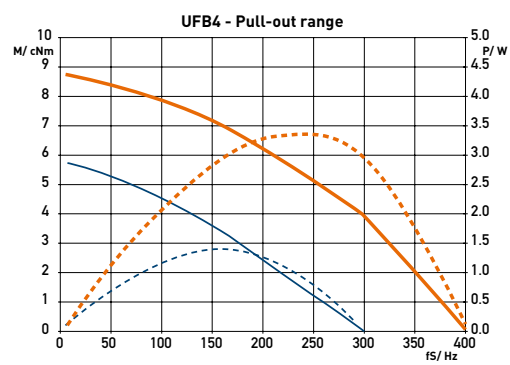

M - Duty cycle 30 %
M - Duty cycle 100%
P - Duty cycle 30 %
P - Duty cycle 100 %

UHD1/2/5/6; UHD3/4/7/8

Dimensions (mm)	∅ 59 x 35 / ∅ 59 x 70
Step angle (°)	7.5
Holding torque (cNm)	13–24 (UHD1/2/5/6); 27,5–45,5 (UHD3/4/7/8)
Detent torque (cNm)	1.3–2,1 (UHD1/2/5/6); 3,4–5,3 (UHD3/4/7/8)
Winding	bipolar/unipolar
Gear combination	J

Standard Data

Climatic class	wide-spread according to DIN IEC 60721-2-1
Ambient temperature operation	-15 ... +55° C
Ambient temperature storage	-20 ... +100° C
Thermal resistance at f=0 (R_{therm})	9 K/W (UHD 1/2/5/6); 6,7 K/W (UHD 3/4/7/8)
Thermal class	A according to DIN EN 60085 (B on request)
Approval	standard
Mounting	any position
Electrical connection	cable
Protection	IP 30 according to DIN EN 60529
Weight (g)	300 (UHD 1/2/5/6), 580 (UHD 3/4/7/8)
Rotor stalling	motor can be stopped when voltage is applied, without being overheated
Bearings	sintered bronze, self-lubricating
Electric strength	according to DIN EN 60034-1/DIN EN 60335-1

Order Reference

Type	Stepper Motor					UHD	1	0	N	36	R	N
Configuration	1	bipolar, two coils, standard magnet	3	bipolar, four coils, standard magnet								
	2	unipolar, two coils, standard magnet	4	unipolar, four coils, standard magnet								
	5	bipolar, two coils, stronger magnet	7	bipolar, four coils, stronger magnet								
	6	unipolar, two coils, stronger magnet	8	unipolar, four coils, stronger magnet								
Rotor shaft, mounting	0	centring 12 mm, shaft 6,35 mm, clip **	3	centring 12 mm, shaft 6,35 mm, screw plate*								
	1	centring 12 mm, shaft 4,0 mm, clip **	4	centring 12 mm, shaft 4,0 mm, screw plate*								
	2	centring 12 mm, shaft 3,0 mm, clip **	5	centring 12 mm, shaft 3,0 mm, screw plate*								
Approval	N	Standard										
Resistance		see next pages Resistance per winding for bipolar or unipolar.										
Direction		reversible										
Cable	N	cable 150 mm (other on request)										

* not for UHD3/4/7/8
** not for UHD1/2/5/6

Technical Data UHD1/2/5/6

bipolar (UHD1/5)	Rated voltage U_N	V	6	12	24
	Resistance per winding R_{20}	Ω	6,8	36	168
	Holding torque	cNm	17,1 (UHD1); 24 (UHD5)		
	Detent torque M_S	cNm	1,3 (UHD1/2); 2,1 (UHD5/6)		
	Rotor inertia J_R	gcm^2	49 (UHD1/2); 56 (UHD5/6)		
unipolar (UHD2/6)	Rated voltage U_N	V	6	12	24
	Resistance per winding R_{20}	Ω	10	45	190
	Holding torque	cNm	13 (UHD2); 17,3 (UHD6)		
	Detent torque M_S	cNm	1,3 (UHD1/2); 2,1 (UHD5/6)		
	Rotor inertia J_R	gcm^2	49 (UHD1/2); 56 (UHD5/6)		
	Steps per revolution	48			
	Duty cycle	100%			
	Winding temperature T_{max}	130° C			
	Direction of rotation	reversible			

Dimensions

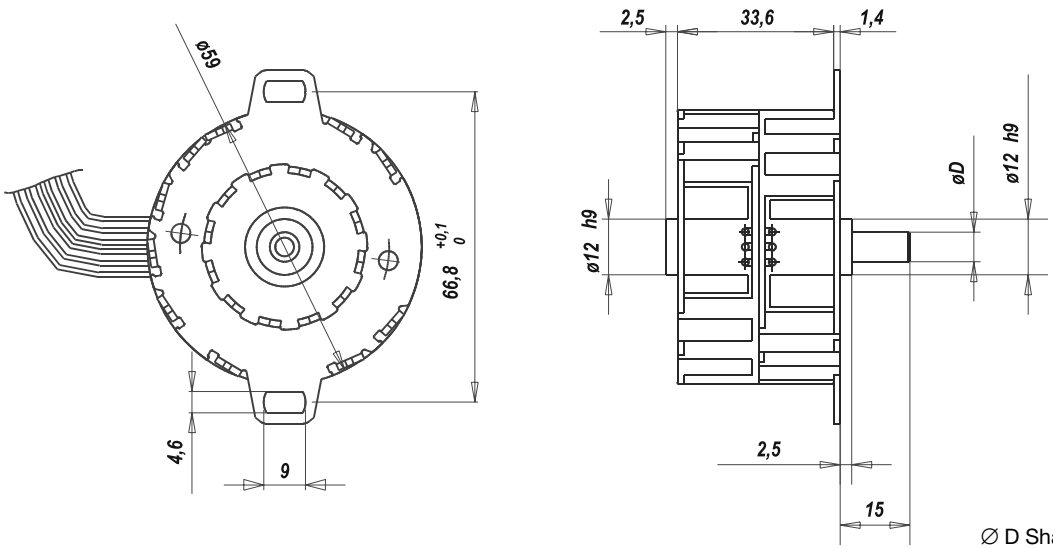

∅ D Shaft
6.35 h6
4.00 h8
3,00 g8

Performance Chart

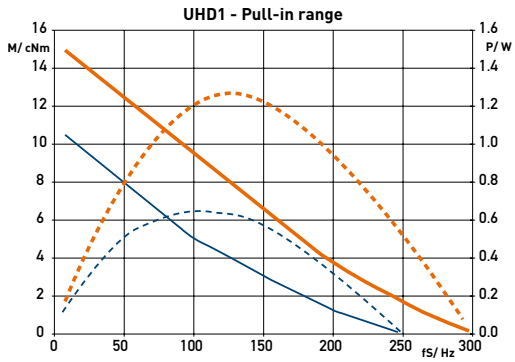

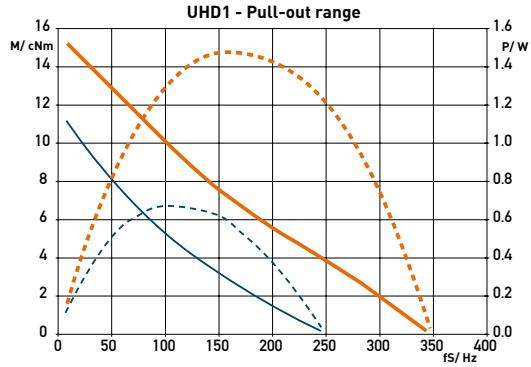

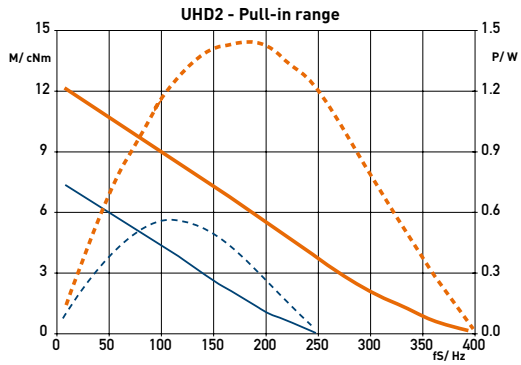

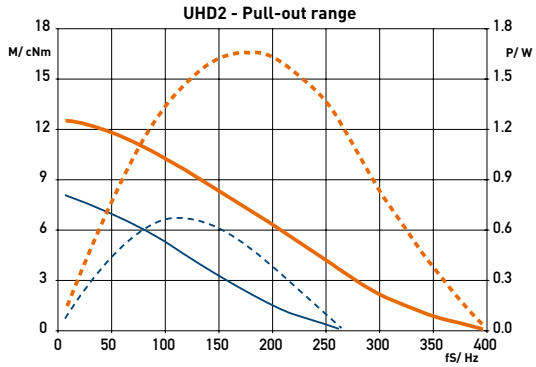

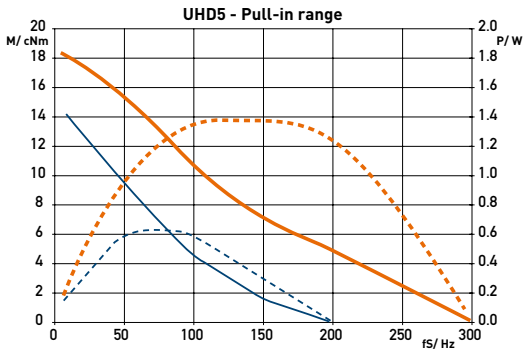

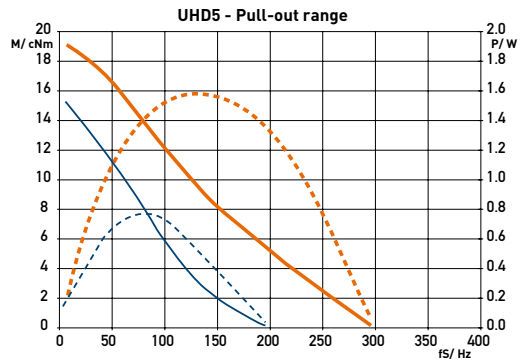

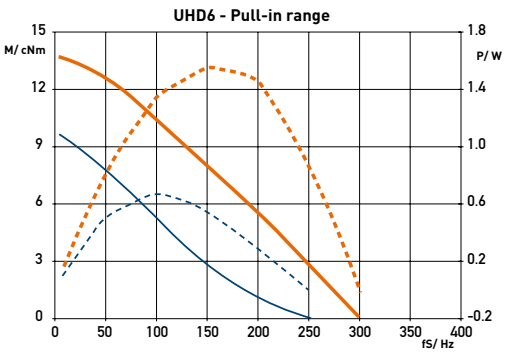

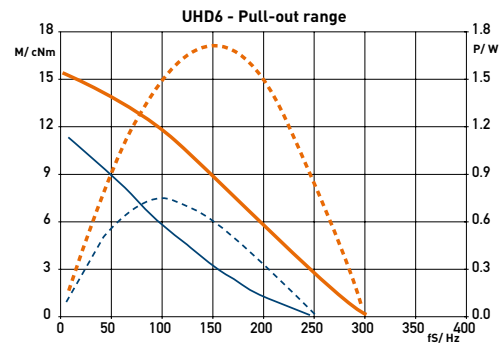

M - Duty cycle 30 %
M - Duty cycle 100%
P - Duty cycle 30 %
P - Duty cycle 100 %

Technical Data UHD3/4/7/8

bipolar (UHD3/7)	Rated voltage U_N	V	12	24	48
	Resistance per winding R_{20}	Ω	20	108	460
	Holding torque	cNm	37,5 (UHD3); 45,5 (UHD7)		
	Detent torque M_S	cNm	3,4 (UHD3/4); 5,3 (UHD7/8)		
	Rotor inertia J_R	gcm^2	135 (UHD3/4); 141 (UHD7/8)		
unipolar (UHD4/8)	Rated voltage U_N	V	6	12	24
	Resistance per winding R_{20}	Ω	6,75	28,5	120
	Holding torque	cNm	27,5 (UHD4); 33,5 (UHD8)		
	Detent torque M_S	cNm	3,4 (UHD3/4); 5,3 (UHD7/8)		
	Rotor inertia J_R	gcm^2	135 (UHD3/4); 141 (UHD7/8)		
	Steps per revolution		48		
	Duty cycle		100%		
	Winding temperature T_{max}		130° C		
	Direction of rotation		reversible		

Dimensions

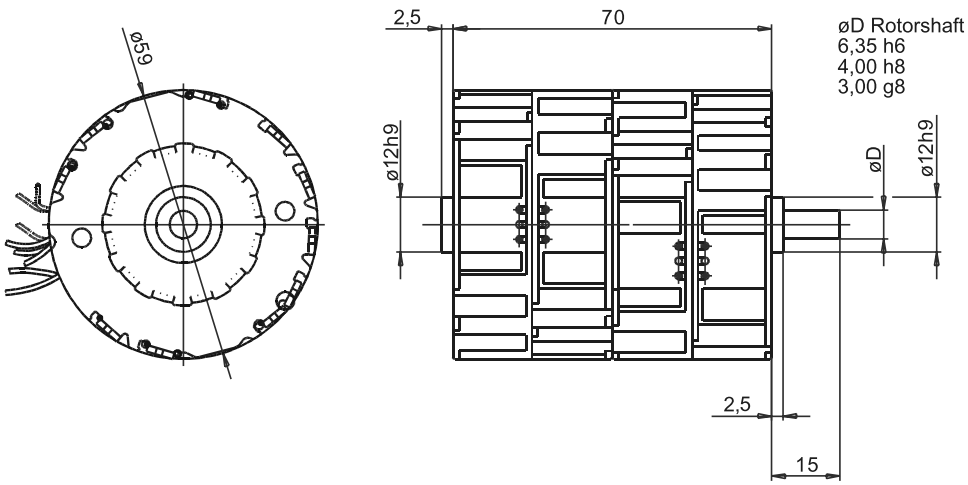

Performance Chart

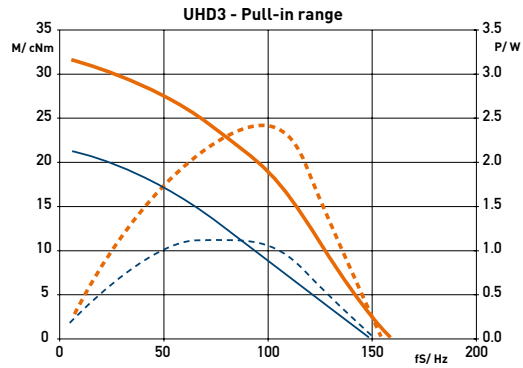

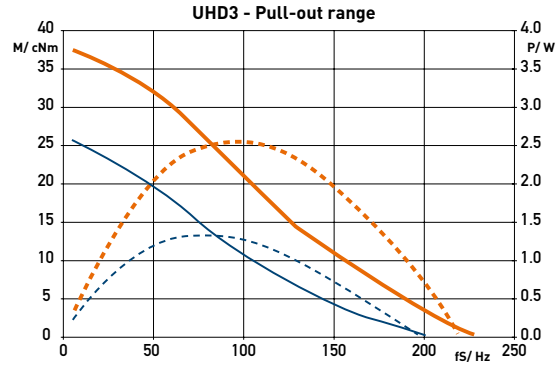

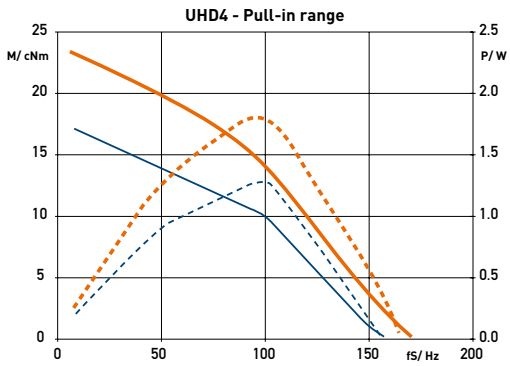

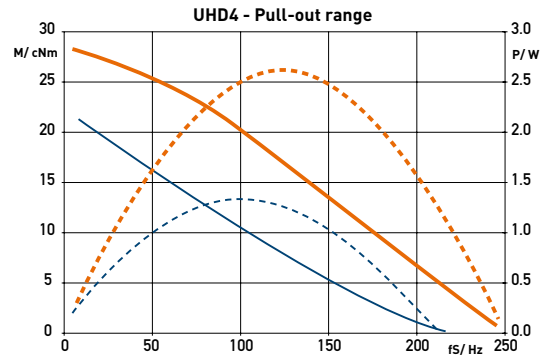

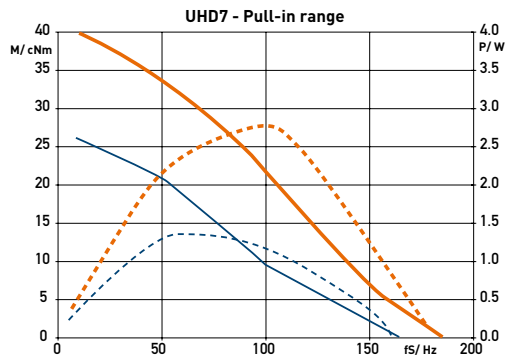

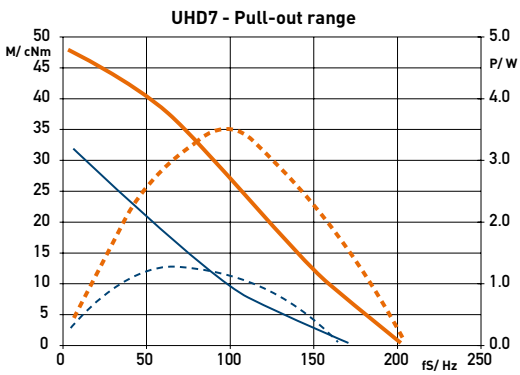

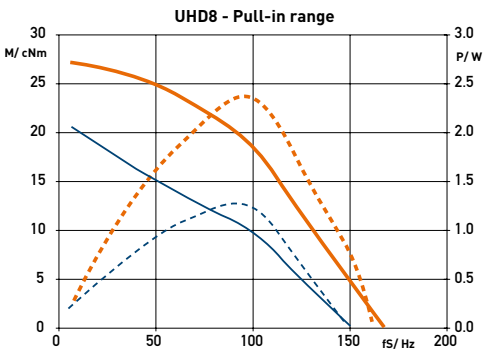

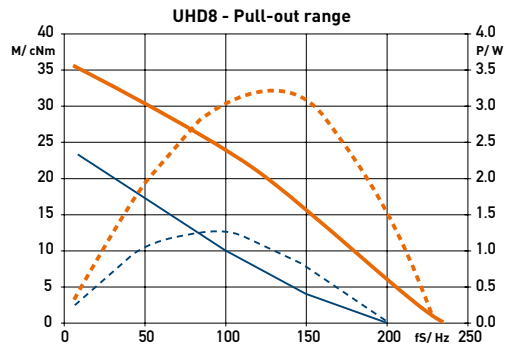

M - Duty cycle 30 %
M - Duty cycle 100%
P - Duty cycle 30 %
P - Duty cycle 100 %

UP (ST6443; ST6444)

Dimensions (mm)	∅ 64 x 43
Step angle (°)	7,5/11,25 (ST6443); 11,25 (ST6444)
Holding torque (cNm)	30–35 (ST6443); 45 (ST6444)
Detent torque (cNm)	2–2,5 (ST6443); 7 (ST6444)
Winding	bipolar
Gear combination	O, P, R

Standard Data

Climatic class	wide-spread according to DIN IEC 60721-2-1
Ambient temperature operation	°C -15 ... +40
Ambient temperature storage	°C -20 ... +100
Thermal resistance at f=0 R_{therm}	29 K/W
Thermal class	B (ST6443); A (ST6444) according to DIN EN 60085
Approval	standard
Mounting	any position
Electrical connection	cable
Protection	IP 30 according to DIN EN 60529
Weight	500 g (ST6443); 550 g (ST6444)
Rotor stalling	motor can be stopped when voltage is applied, without being overheated
Bearings	Sintered bronze, self- lubricating

Order Reference

Type	Stepper Motor		ST6443 / ST6444	7,5°	3,7 Ω
Step angle	7,5°	(ST6443)			
	11,25°	(ST6443 / ST6444)			
Resistance	3,7 Ω				

Technical Data

bipolar (ST6443)	Rated voltage U_N	V	4,5	4,5
	Resistance per winding R_{20}	Ω	3,7	
	Step angle	°	7,5	11,25
	Holding torque M_H	cNm	35	30
	Detent torque M_S	cNm	2,5	2
	Rotor inertia J_R	gcm^2	85	
	Steps per revolution		48	32
	Winding temperature increase	K	90	
	Current per winding	A	1,25	
	Inductance per winding	mH	10	9,5
	Power consumption	W	11,5	
	Driver mode		Chopper drive	
bipolar (ST6444)	Rated voltage U_N	V	4,5	
	Resistance per winding R_{20}	Ω	3,7	
	Step angle	°	11,25	
	Holding torque M_H	cNm	45	
	Detent torque M_S	cNm	7	
	Rotor inertia J_R	gcm^2	180	
	Steps per revolution		32	
	Winding temperature increase	K	90	
	Current per winding	A	1,25	
	Inductance per winding	mH	8	
	Power consumption	W	11,5	
	Driver mode		Chopper drive	

Circuit diagram Motor connections - bipolar

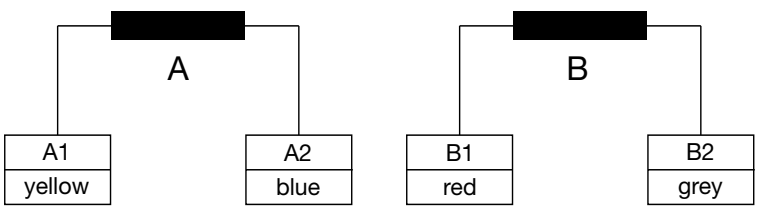

		clockwise rotation				
A	A1 / A2	↓	↑	↑	↓	↓
B	B1 / B2	↑	↑	↓	↓	↑

Dimensions

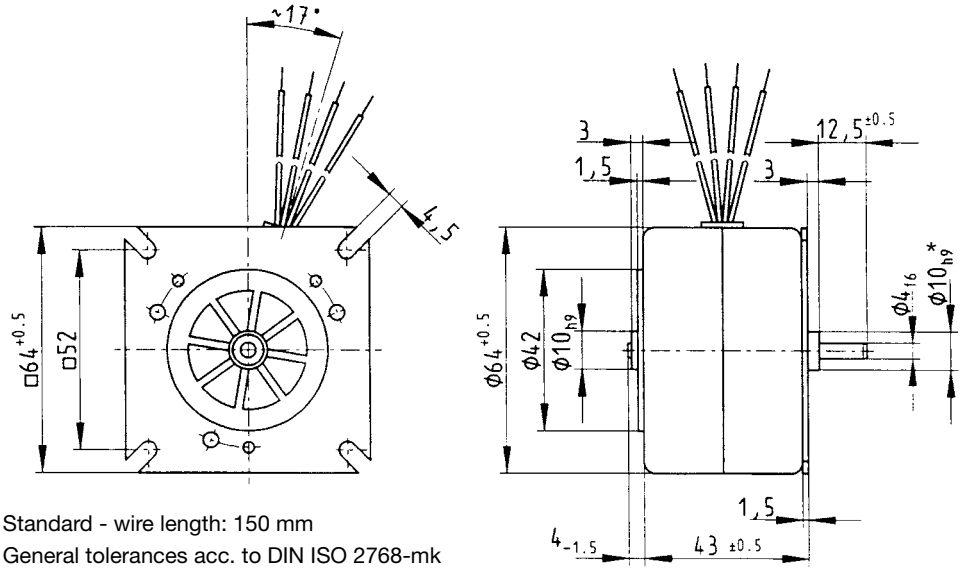

Standard - wire length: 150 mm
General tolerances acc. to DIN ISO 2768-mk

* on request 14h9

Performance Chart (chopper driver)

ST6443 UPD1 (ST6443/7,5/1)

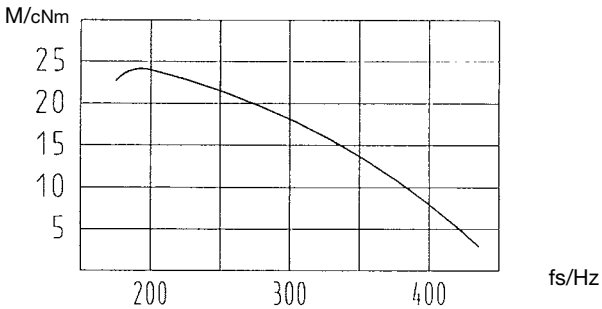

UPJ1 (ST 6443/11,25/1)

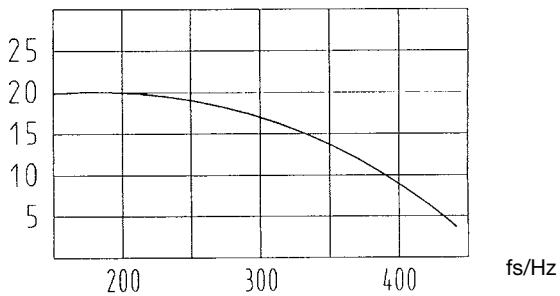

ST6444 UPJ5 (ST 6444/11,25)

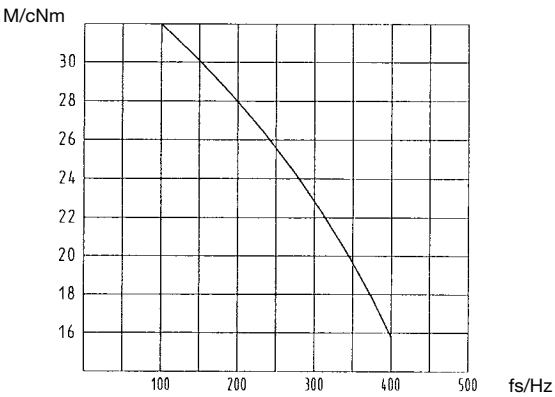

Gearboxes for Motors

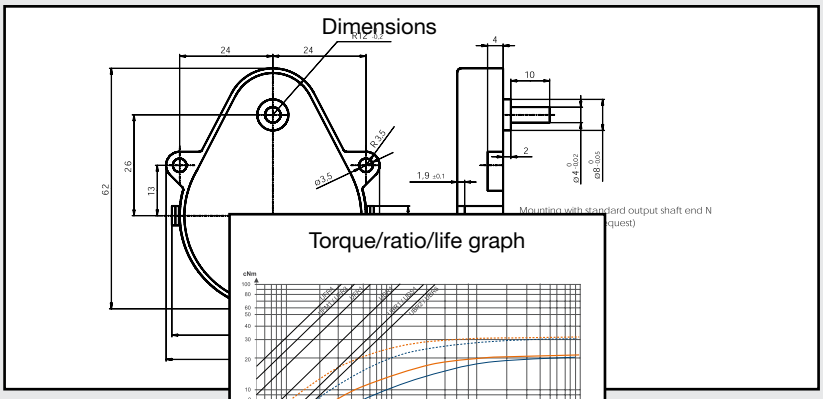

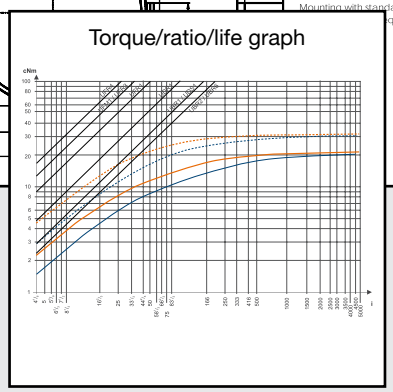

JOHNSON ELECTRIC

innovating motion

UGA

Dimensions (mm)	55 x 62
Hight (mm)	12
Max. torque (cNm)	32
Ratios	4 1/6 ... 360.000
Internal slipping clutch	none
Standard shaft (mm)	∅ 4 x 10
Weight (g)	55
Motor combination	Series UB and UD; Series UF without UFR3/4 and UFB3/4

Standard Data

Mounting	any position
Axial thrust F_A	20 N
Lateral force F_R	60 N
Output shafts	∅ 4 x 10, other on request
Climatic class	wide-spread according to DIN IEC 60721-2-1
Ambient temperature operation	-15 ... +55° C
Ambient temperature storage	-40 ... +80° C

Ratios												
4 1/6	5	8 1/3	10	12 1/2	15	16 2/3	20 5/6	25	30	31 1/4	33 1/3	37 1/2
41 2/3	45	50	60	62 1/2	75	83 1/3	100	112 1/2	120	125	135	140 5/8
150	166 2/3	187 1/2	200	250	277 7/9	300	375	416 2/3	450	500	600	625
750	900	937 1/2	1000	1125	1200	1250	1500	1800	1875	2250	2500	3000
3600	3750	4500	5000	5400	7200	7500	9000	11250	12000	12500	15000	18000
18750	22500	27000	30000	36000	37500	45000	54000	60000	72000	75000	90000	108000
112500	120000	135000	150000	180000	216000	240000	360000					

Order Reference

Type	Gearbox		UGA	100	N	N
Ratio		100				
Slipping clutch	N	Without slipping clutch				
Shaft end	N	∅ 4 x 10, other on request				

Dimensions

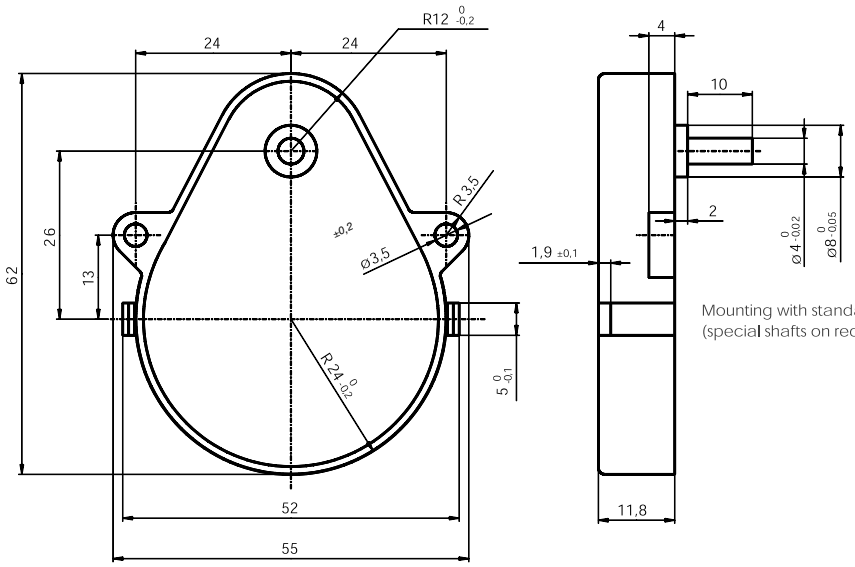

Mounting with standard output shaft end N
(special shafts on request)

UDS 1..A

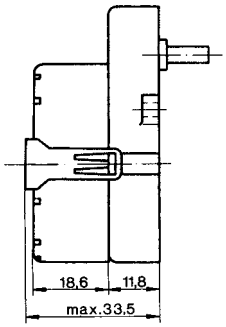

UBR 1/UBR 2..A

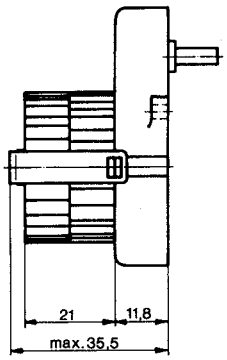

UDR 1..A

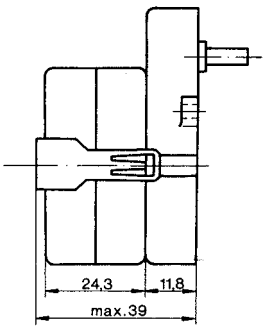

UFM 1/UFR 1..A

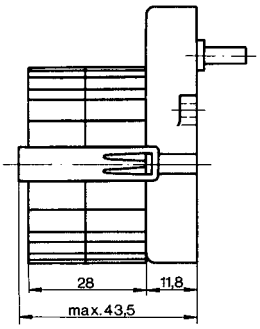

Torque / ratio / life graph

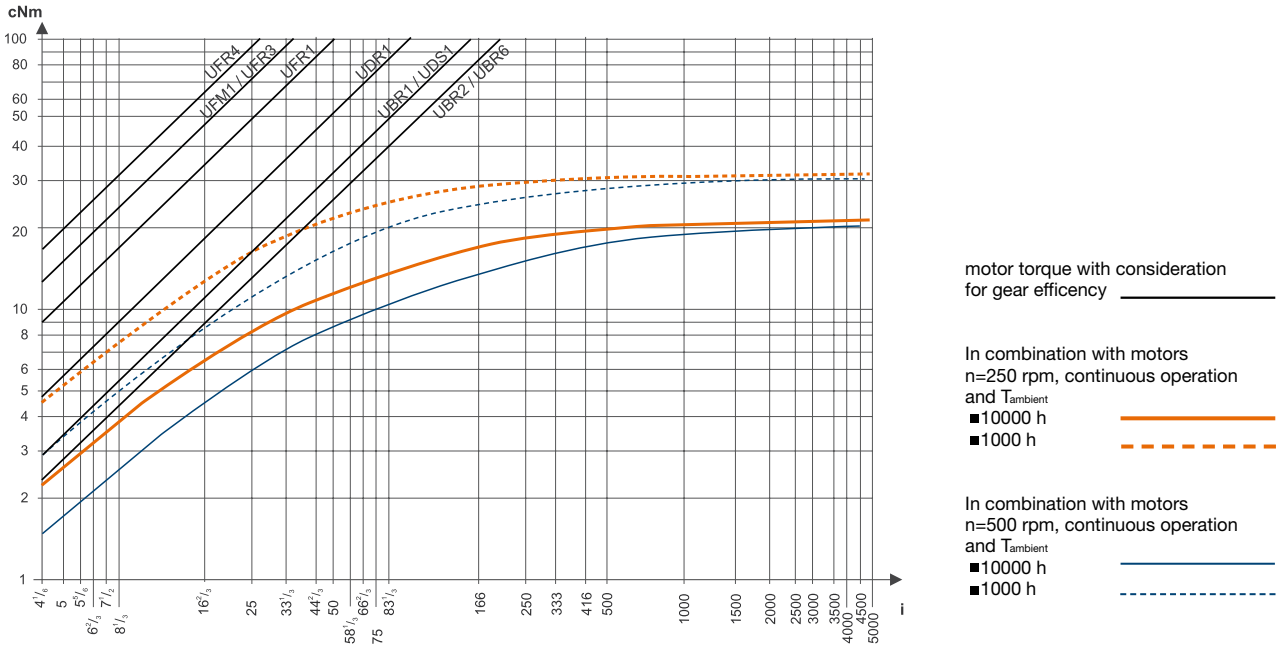

UGD

Dimensions (mm)	55 x 65,6
Hight (mm)	13
Max. torque (cNm)	32
Ratios	4 1/6 ... 6.048.000
Internal slipping clutch	optional for ratios ≥ 33 1/3
Standard shaft (mm)	∅ 4 x 10
Weight (g)	35
Motor combination	Series UB and UD; Series UF without UFR3/4 and UFB3/4

Standard Data

Mounting	any position
Axial thrust F_A	10 N
Lateral force F_R	50 N
Slipping clutches/free wheel	single-way clockwise/counter clockwise function and two way
Slipping-/free wheel torque	1 ... 40 cNm
Output shafts	∅ 4 x 10, other on request
Climatic class	wide-spread according to DIN IEC 60721-2-1
Ambient temperature operation	°C -15 ... +55
Ambient temperature storage	°C -40 ... +80

Ratios												
4 1/6	5	8 1/3	10	12 1/2	15	16 2/3	20 5/6	25	30	33 1/3	40	41 2/3
45	50	60	62 1/2	83 1/3	100	120	125	150	166 2/3	200	250	300
375	500	600	625	750	900	1000	1200	1500	1800	2000	2400	2500
3000	3600	3750	4500	5000	6000	7500	9000	10000	15000	18000	21600	22500
30000	36000	45000	54000	60000	72000	90000	108000	112500	120000	180000	216000	225000
270000	300000	360000	432000	450000	720000	864000	1800000	5040000	6048000			

Order Reference

Type	Gearbox	UGD	100	N	5cNm	N
Ratio	100					
Slipping clutch	N Without slipping clutch ER One-way slipping clutch, clockwise EL One-way slipping clutch, counter clockwise Z Two-way slipping clutch					
Slipping torque	5 cNm (for instance)					
Shaft end	N ∅ 4 x 10, other on request					

Dimensions

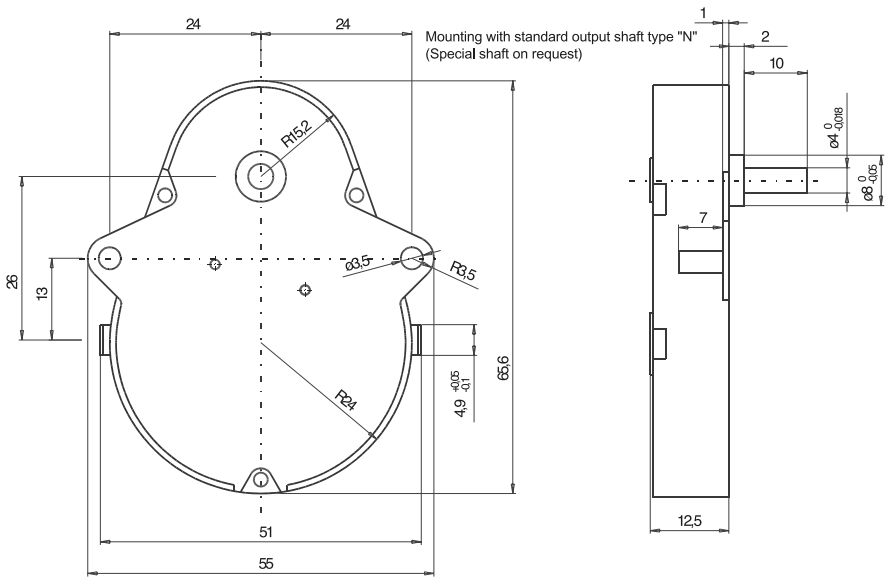

UDS 1..D

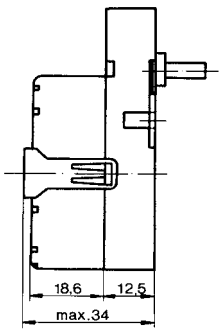

UBR 1/UBR 2..D

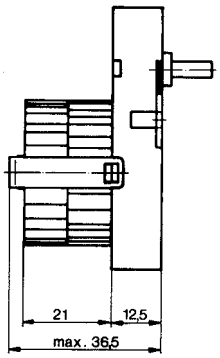

UDR 1..D

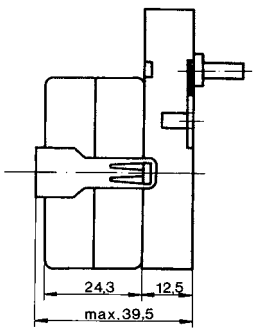

UFM 1/UFR 1..D

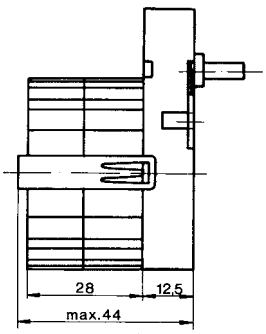

Slipping clutches

	max. torque available at output shaft (cNm)	free wheel-/clutch torque (cNm)
Roller-type free wheel	32	1
Single-way slipping clutches	32	4 ... 25 counter clockwise or clockwise function
Two-way slipping clutches	3 ... 15	4 ... 40

Torque / ratio / life graph

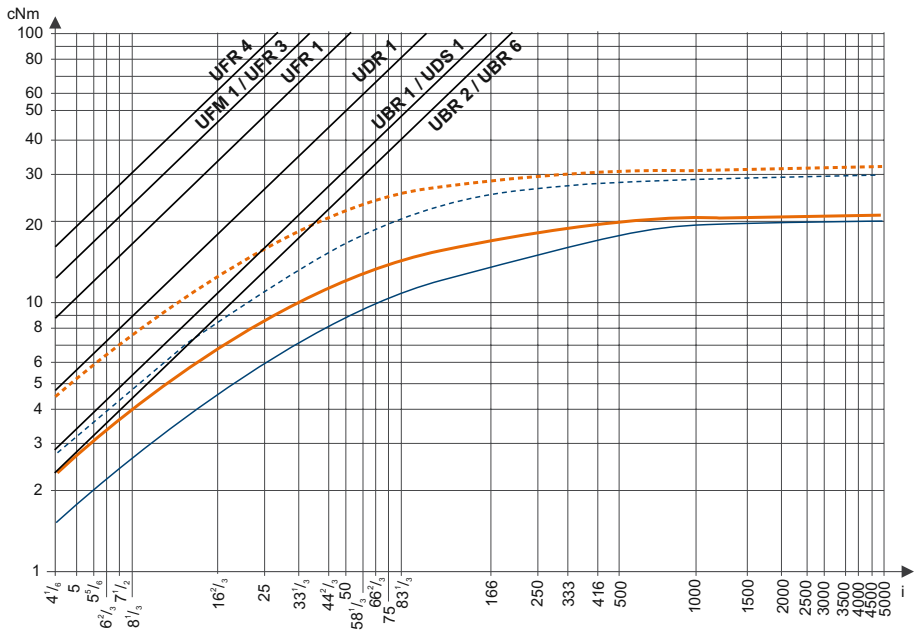

motor torque with consideration for gear efficency

In combination with motors n=250 rpm, continuous operation and $T_{ambient}$
- 10000 h
- 1000 h

In combination with motors n=500 rpm, continuous operation and $T_{ambient}$
- 10000 h
- 1000 h

UGM

Dimensions (mm)	51 x 65.2
Hight (mm)	15
Max. torque (cNm)	100
Ratios	12.5 ... 4800
Internal slipping clutch	none
Standard shaft (mm)	∅ 4 x 10
Weight (g)	45
Motor combination	Series UB and UD; Series UF without UFR3/4 and UFB3/4

Standard Data

Mounting	any position
Axial thrust F_A	20 N
Lateral force F_R	100 N
Output shafts	∅ 4 x 10, other on request
Climatic class	wide-spread according to DIN IEC 60721-2-1
Ambient temperature operation	°C -15 ... +60
Ambient temperature storage	°C -40 ... +80

Ratios	12 1/2	16 2/3	25	50	100	120	150	200	240	300	400	450	500	600
	750	1000	1200	1500	4800									

Order Reference

Type	Gearbox		UGM	100	N	N
Ratio		100				
Slipping clutch	N	Without slipping clutch				
Shaft end	N	∅ 4 x 10, other on request				

Dimensions

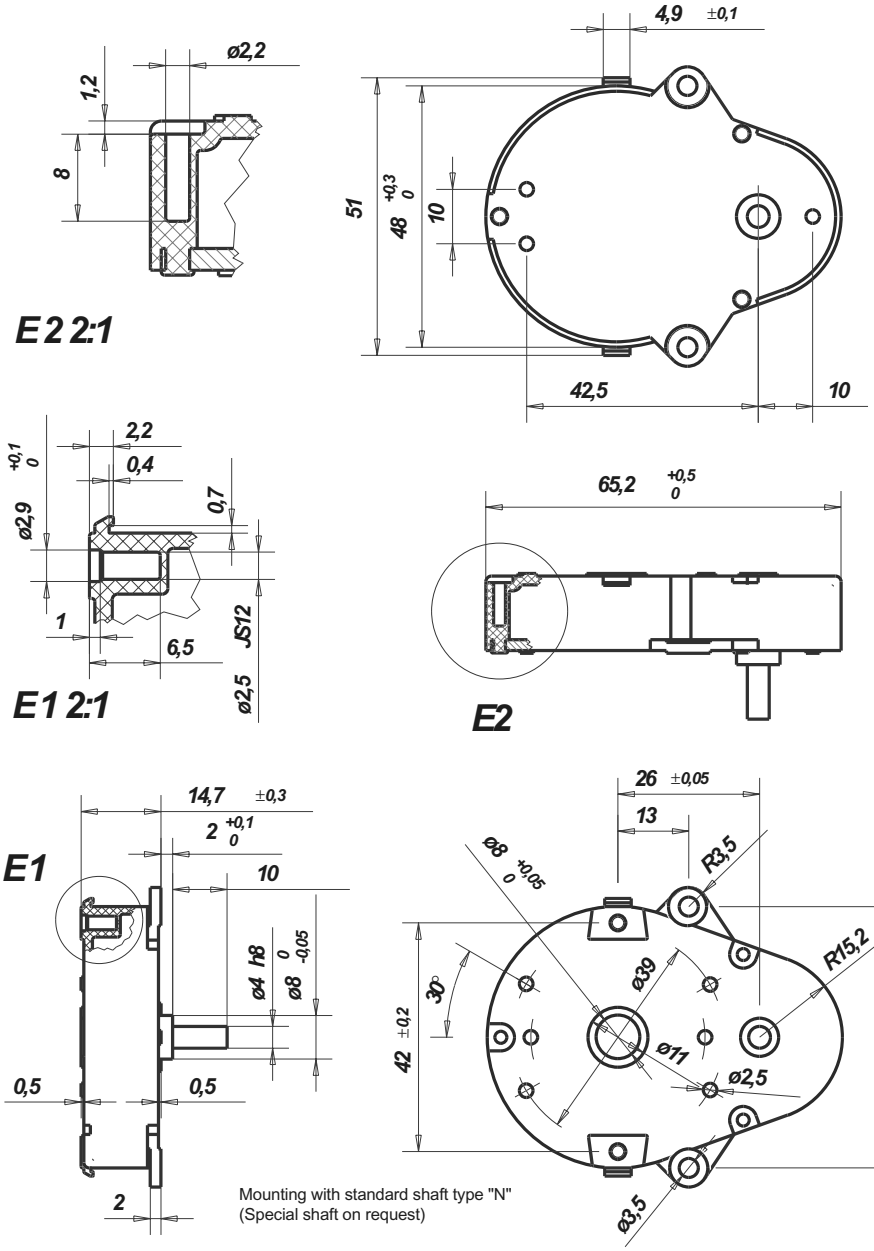

Mounting with standard shaft type "N"
(Special shaft on request)

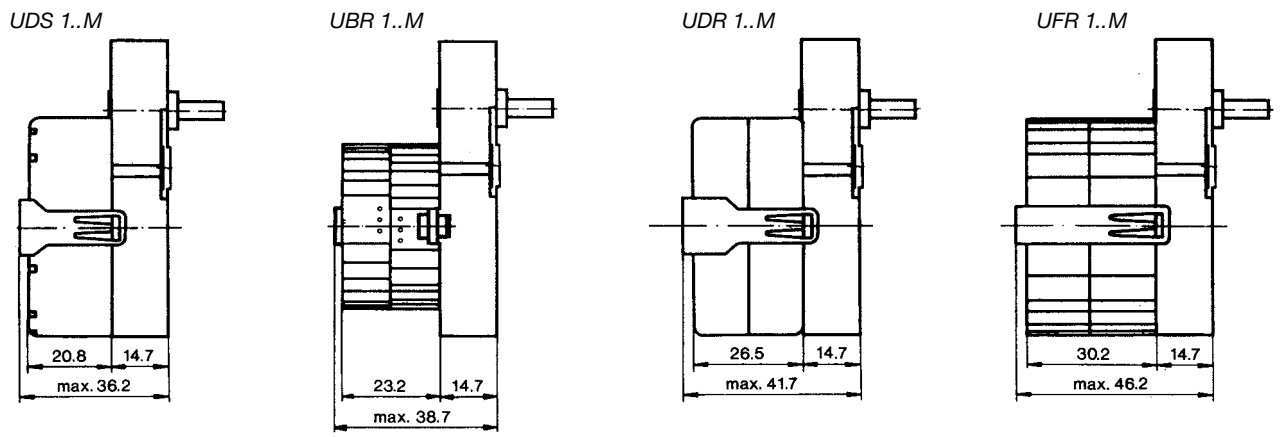

Torque / ratio / life graph

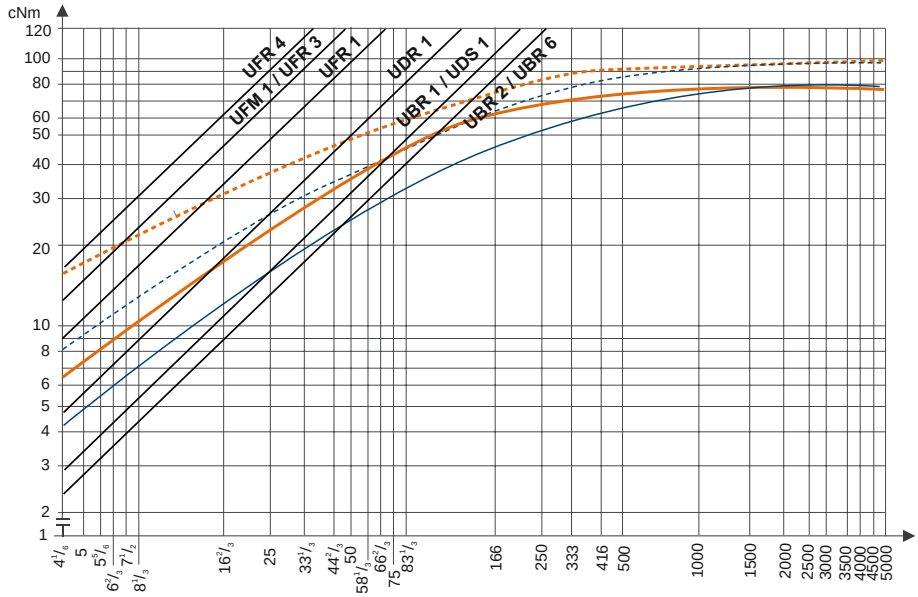

motor torque with consideration for gear efficency

In combination with motors n=250 rpm, continuous operation and $T_{ambient}$
- 10000 h
- 1000 h

In combination with motors n=500 rpm, continuous operation and $T_{ambient}$
- 10000 h
- 1000 h

UGB

Dimensions (mm)	58 x 81
Hight (mm)	17
Max. torque (cNm)	250
Ratios	41 2/3 ... 345.600
Internal slipping clutch	optional
Standard shaft (mm)	∅ 8 x 12
Weight (g)	130
Motor combination	Series UB and UD; Series UF without UFR3/4 and UFB3/4

Standard Data

Mounting	any position
Axial thrust F_A	100 N
Lateral force F_R	300 N
Slipping clutches/free wheel	single-way clockwise/counter clockwise function and two way
Slipping-/free wheel torque	4 ... 175 cNm
Output shafts	Ø 8 x 12, other on request
Climatic class	wide-spread according to DIN IEC 60721-2-1
Ambient temperature operation	°C -15 ... +55
Ambient temperature storage	°C -40 ... +80

Ratios												
41 2/3	83 1/3	100	125	150	166 2/3	200	250	300	500	600	750	900
1000	1200	1500	1800	2000	2500	3000	3750	5000	6000	7500	12000	15000
18000	30000	36000	60000	120000	266666 2/3	288000	320000	345600				

Order Reference

Type	Gearbox	UGB	100	N	5cNm	N
Ratio	100					
Slipping clutch	N Without slipping clutch ER One-way slipping clutch, clockwise EL One-way slipping clutch, counter clockwise Z Two-way slipping clutch					
Slipping torque	5 cNm					
Shaft end	N ∅ 8 x 12, other on request					

UGB

Dimensions

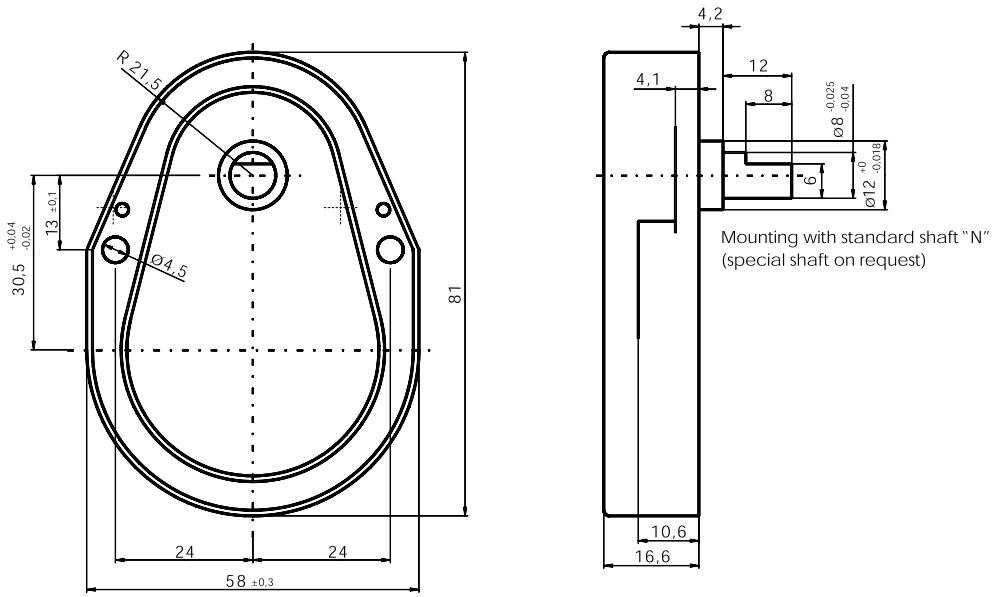

UDS 1..B

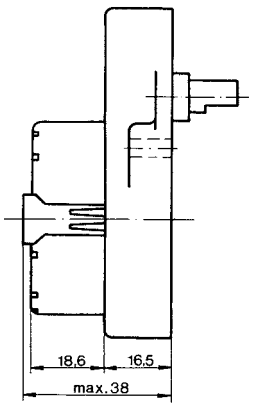

UBR 1/UBR 2..B

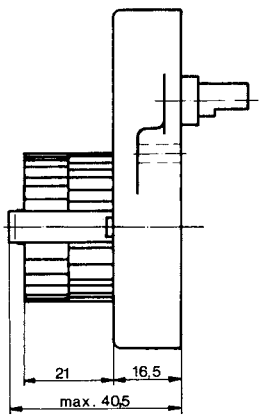

UDR 1..B

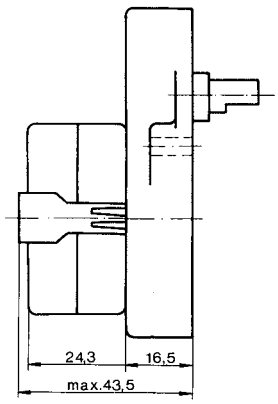

UFM 1/UFR 1..B

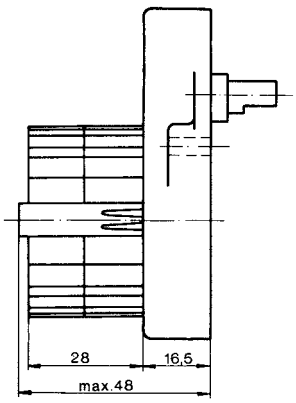

Slipping clutches

	max. torque available at output shaft (cNm)	free wheel-/clutch torque (cNm)
Roller-type free wheel		
Single-way slipping clutches	150	4 ... 50 counter clockwise or clockwise direction possible
Two-way slipping clutches	40 ... 70	60 ... 175

Torque / ratio / life graph

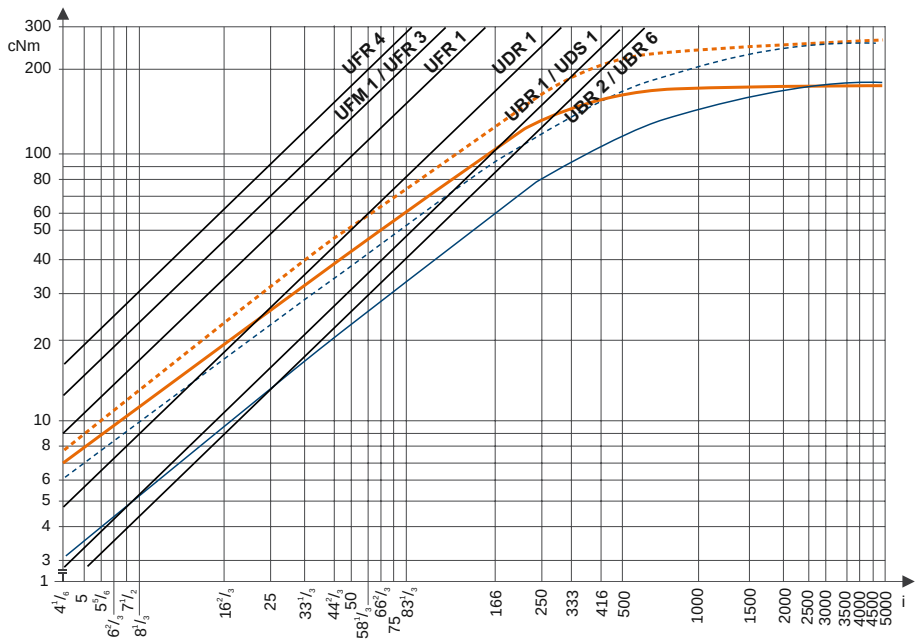

motor torque with consideration for gear efficency

In combination with motors n=250 rpm, continuous operation and $T_{ambient}$
- 10000 h
- 1000 h

In combination with motors n=500 rpm, continuous operation and $T_{ambient}$
- 10000 h
- 1000 h

UGF

Dimensions (mm)	58 x 81
Hight (mm)	17
Max. torque (cNm)	500
Ratios	4 1/6 ... 5000
Internal slipping clutch	none
Standard shaft (mm)	∅ 8 x 12
Weight (g)	130
Motor combination	Series UB, UD, UF

Standard Data

Mounting	any position
Axial thrust F_A	100 N
Lateral force F_R	400 N
Slipping clutches/free wheel	none
Slipping-/free wheel torque	cNm
Output shafts	∅ 8 x 12, other on request
Climatic class	wide-spread according to DIN IEC 60721-2-1
Ambient temperature operation	°C -15 ... +55
Ambient temperature storage	°C -40 ... +80

Ratios	4 1/6	8 1/3	16 2/3	20 5/6	25	30	41 2/3	50	62 1/2	83 1/3	100	125	166 2/3
	250	333 1/3	500	600	750	1000	1200	1500	4000	5000			

Order Reference

Type	Gearbox		UGF	100	N	N
Ratio		100				
Slipping clutch	N	Without slipping clutch				
Shaft end	N	∅ 8 x 12, other on request				

Dimensions

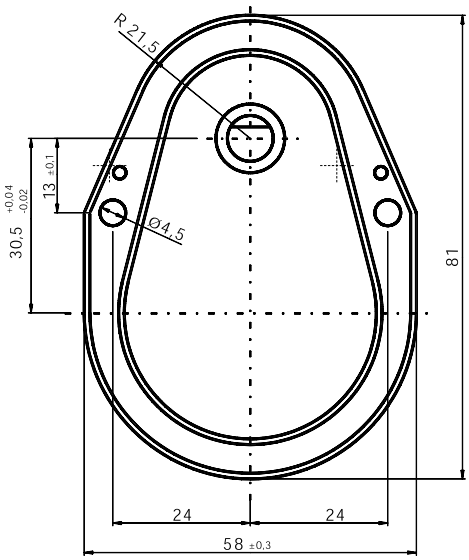

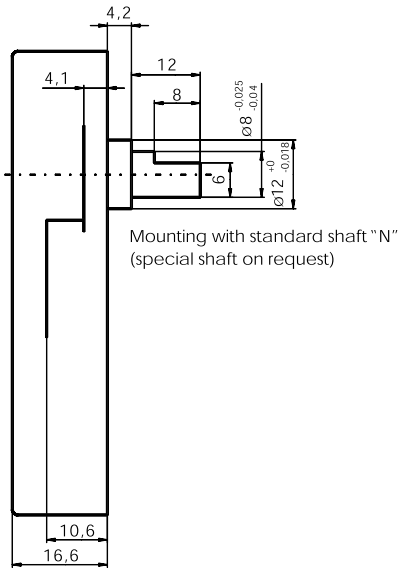

Mounting with standard shaft "N"
(special shaft on request)

UDS 1..F

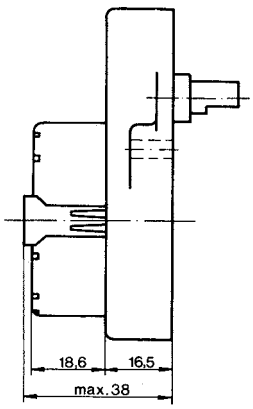

UBR 1/UBR 2..F

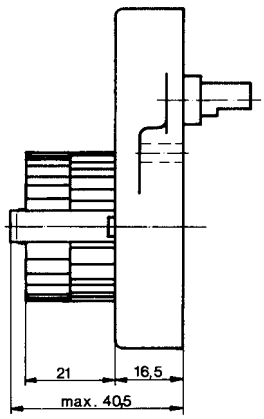

UDR 1..F

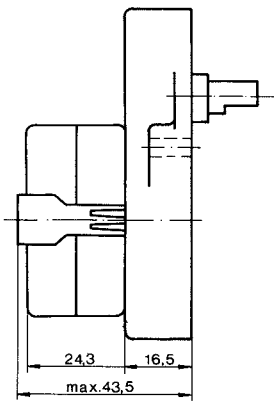

UFM 1/UFR 1..F

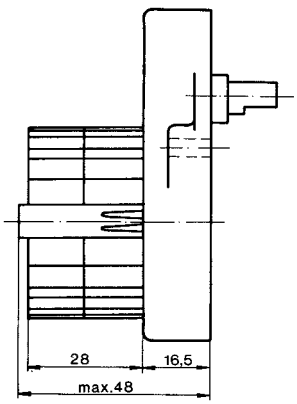

UFR 3..F

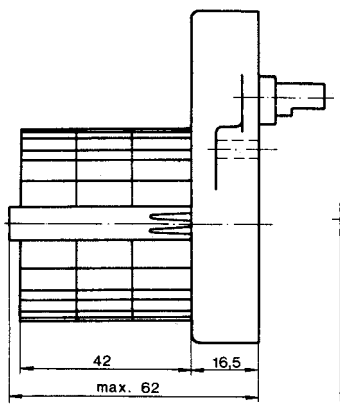

UFR 4..F

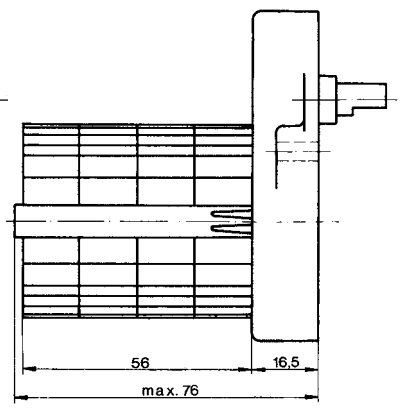

Torque / ratio / life graph

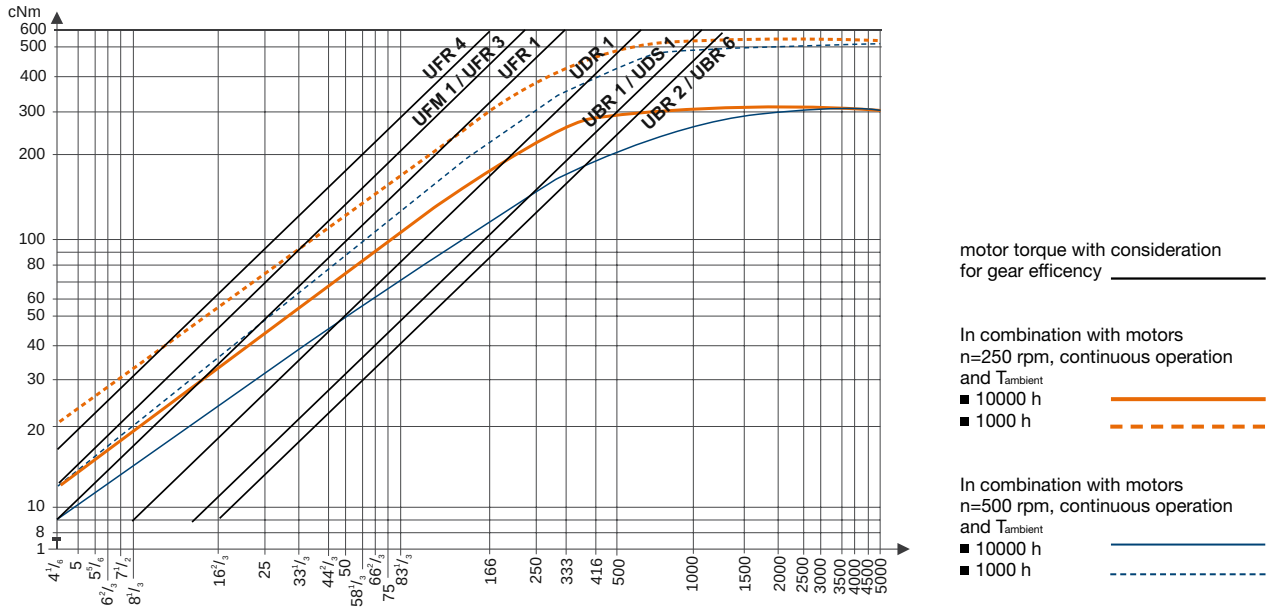

UGV

Dimensions (mm)	70 x 70
Hight (mm)	17
Max. torque (cNm)	500
Ratios	8 1/3 ... 2000
Internal slipping clutch	none
Standard shaft (mm)	∅ 8 x 12
Weight (g)	130
Motor combination	Series UB, UD, UF

Standard Data

Mounting	any position
Axial thrust F_A	100 N
Lateral force F_R	400 N
Output shafts	Ø 8 x 12, other on request
Climatic class	wide-spread according to DIN IEC 60721-2-1
Ambient temperature operation	°C -15 ... +55
Ambient temperature storage	°C -40 ... +80

Ratios	8 1/3	16 2/3	25	41 2/3	83 1/3	100	125	250	500	2000

Order Reference

Type	Gearbox		UGV	100	N	N
Ratio		100				
Slipping clutch	N	Without slipping clutch				
Shaft end	N	∅ 8 x 12, other on request				

Dimensions

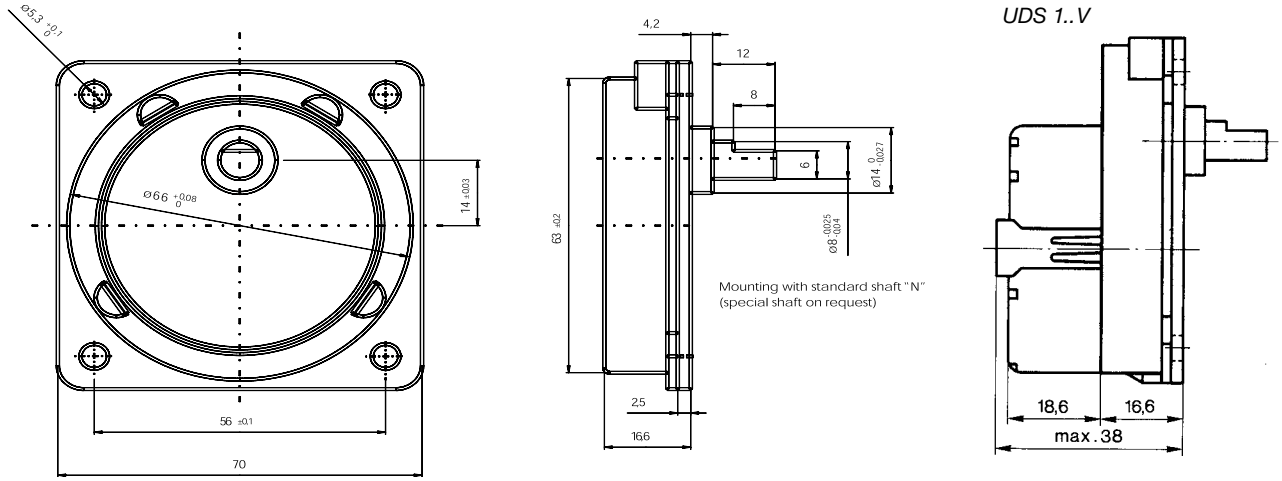

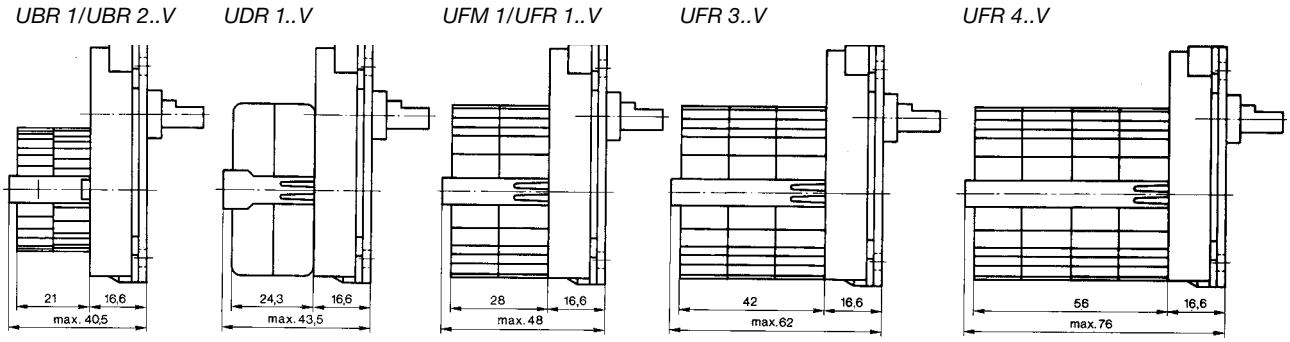

Torque / ratio / life graph

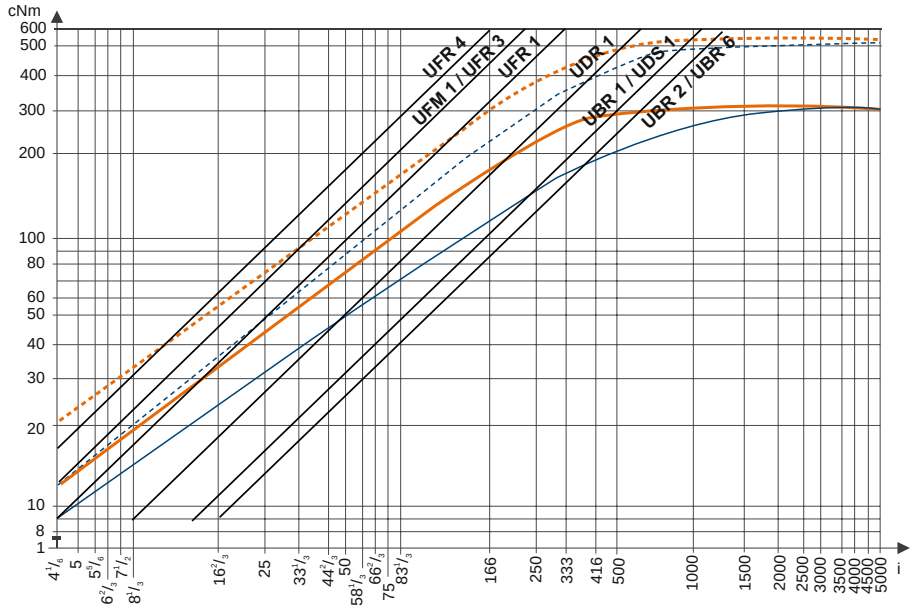

motor torque with consideration for gear efficency

In combination with motors n=250 rpm, continuous operation and $T_{ambient}$
- 10000 h
- 1000 h

In combination with motors n=500 rpm, continuous operation and $T_{ambient}$
- 10000 h
- 1000 h

UGO/UGP

UGO/UGP (STG60/61)

Dimensions (mm)	65 x 65/68 x 68
Hight (mm)	29,8–38
Max. torque (cNm)	600
Ratios	6 1/4 ... 5400
Internal slipping clutch	none
Standard shaft (mm)	∅ 8 x 22
Weight (g)	230–330
Motor combination	series UN, UO, UF and UP, UGO not with UPUO

UGO (STG 60)

UGP (STG 61)

Gearboxes

Standard Data

Mounting	any position	
Max. input speed*	3000 min^{-1}	
Max. output torque*	600 cNm	
Max. input -and output power	please refer to table in Technical Data	
Average back lash	unloaded	1,5 degree
	2–4 stages with 6 Nm	3 degree
	5–6 stages with 6 Nm	4 degree
Max. axial force F_A	30 N	
Max. lateral force F_R, 12 mm from lange	80 N	
Max. axial play	0,3 mm	
Max. radial play	20 µm	
Working temperature	0 ... +50 °C	
Ambient temperature storage	–40 ... +100 °C	

Ratio											
6 1/4	12 1/2	18 3/4	37 1/2	46 7/8	62 1/2	93 3/4	125	150	187 1/2	375	750
1500	2000	3750	5400								

* Depends on ratio, see next page

Order Reference

Type	Gearbox		STG60 UGO	6 1/4	1	1
Ratio	6 1/4					
shaft end	1	see next pages	drawings Dimension shaft end types			
	2					
	3					
	4					
fixing	1	through holes				
	2	threaded holes (only STG61)				
optional	motor pinion: see next pages	Motor Pinion Data				
	adaptor plate: see next pages	for adaptor plate				

Technical Data

Ratio	Stages *	η	pinion type	Weight	Max. torque (Nm)	Max. input speed (rpm)
6 1/4	2	0,77	1	190	1,0	750
12 1/2	3	0,68	2	220	1,8	750
18 3/4	3	0,68	3	220	2,7	750
37 1/2	3	0,68	4	220	5,4	750
46 7/8	4	0,60	3	250	6	750
62 1/2	4	0,60	2	250	6	1000
93 3/4	4	0,60	3	250	6	1500
125	4	0,60	2	250	6	2000
150	4	0,60	3	250	6	2400
187 1/2	4	0,60	4	250	6	3000
375	5	0,53	3	280	6	3000
750	5	0,53	4	280	6	3000
1500	6	0,46	4	310	6	3000
2000	6	0,46	4	310	6	3000
3750	6	0,46	4	310	6	3000
5400	6	0,46	5	310	6	3000

Technical Data valid for a working temperature 0 °C ... +50 °C

* Direction of rotaton of output- and motor-shaft at 2,4 and 6 stages - same
3 and 5 stages - opposite

Dimensions shaft end types UGO/P (STG 60/61), other on request

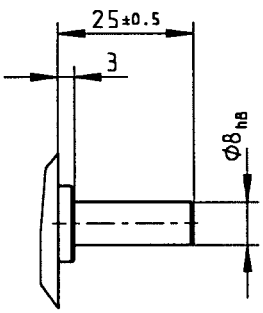

type 1 (standard)

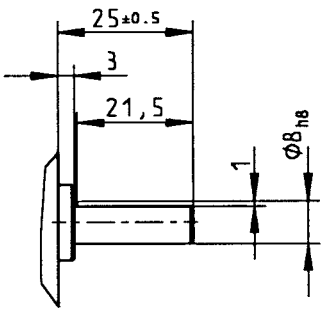

type 2

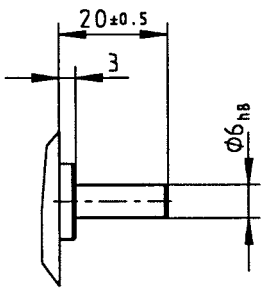

type 3

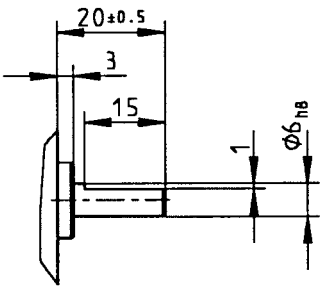

type 4

Dimensions

UGO (STG 60)

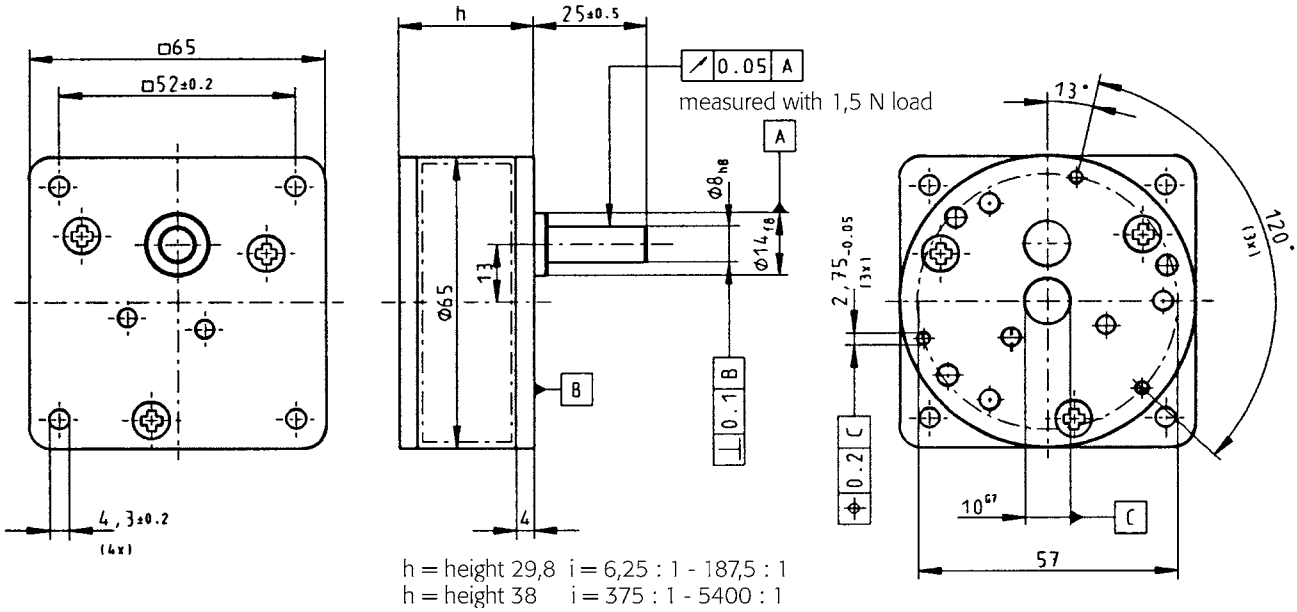

h = height 29,8 i = 6,25 : 1 - 187,5 : 1
h = height 38 i = 375 : 1 - 5400 : 1

UGP (STG 61)

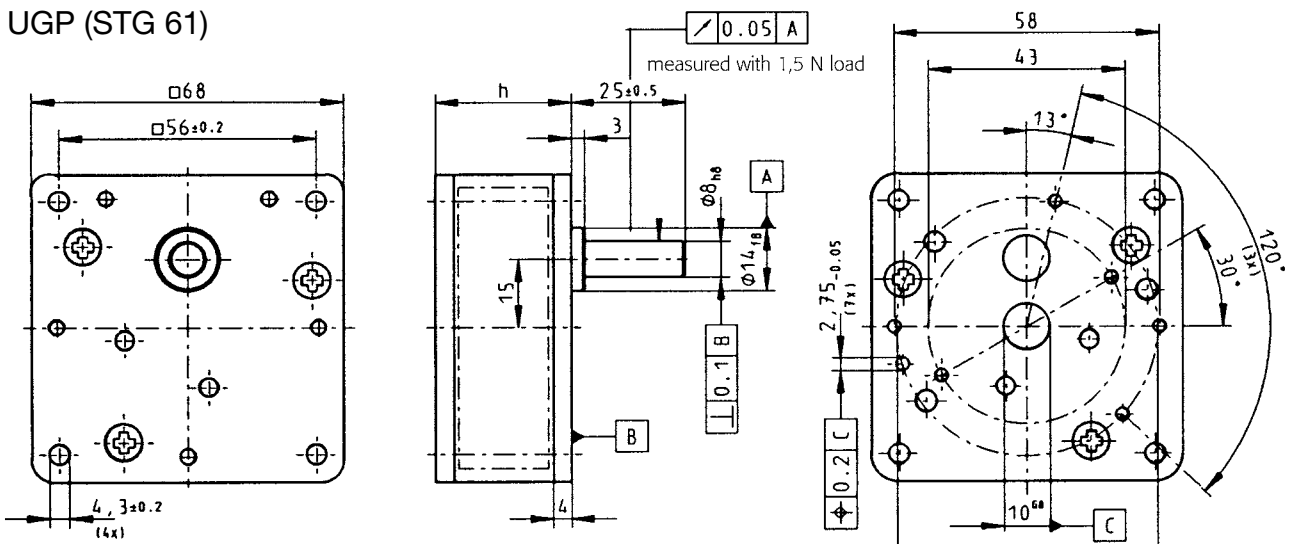

h = height 29,8 i = 6,25 : 1 - 187,5 : 1
h = height 38 i = 375 : 1 - 5400 : 1

For fixing version 2 (threaded holes, see page before):
4 holes d = 4,3 are threaded holes M4
(only for UGP possible)

Motor Pinion Data UGO/P (STG 60/61)

pinion type	d	h	D	module	no. of teeth	Order Reference
1	$2{,}5^{S7}$	6	9.81	0.38	24	022-100-004-010
	$13{,}0^{S7}$	6	9.81	0.38	24	022-100-004-020
	4.0^{X7}	6	9.81	0.38	24	022-100-004-030
	5.0^{S7}	6	9.81	0.38	24	022-100-004-040
2	2.5^{S7}	4.5	9.81	0.38	24	022-100-004-070
	3.0^{S7}	4.5	9.81	0.38	24	022-100-004-080
	4.0^{X7}	4.5	9.81	0.38	24	022-100-004-090
	5.0^{S7}	4.5	9.81	0.38	24	022-100-004-110
3	2.5^{S7}	4.5	9.32	0.5	16	022-100-004-270
	3.0^{S7}	4.5	9.32	0.5	16	022-100-004-280
	4.0^{X7}	4.5	9.32	0.5	16	022-100-004-290
	5.0^{S7}	4.5	9.32	0.5	16	022-100-004-310
4	2.5^{S7}	4.5	8.23	0.42	16	022-100-004-580
	3.0^{S7}	4.5	8.23	0.42	16	022-100-004-590
	4.0^{X7}	4.5	8.23	0.42	16	022-100-004-600
	5.0^{S7}	4.5	8.23	0.42	16	022-100-004-610
5	2.0^{S7}	4.5	6.34	0.42	12	022-100-004-730
	2.5^{S7}	4.5	6.34	0.42	12	022-100-005-150
	3.0^{S7}	4.5	6.34	0.42	12	022-100-004-740

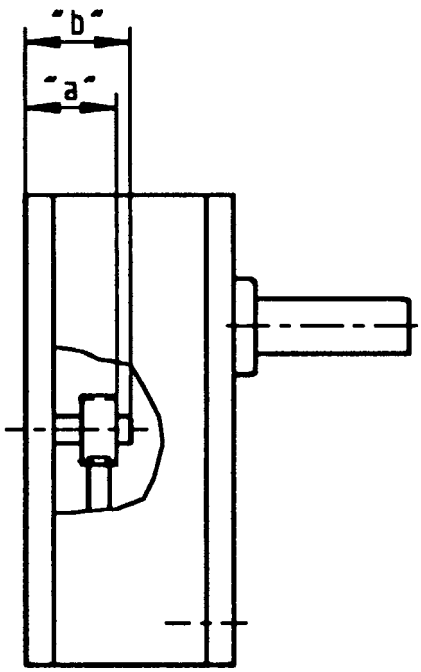

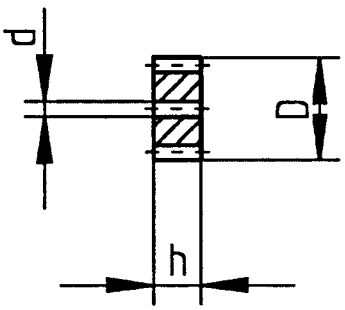

pinion position	Dimension	„a"	„b"
	2 gear stages	$8{,}9_{-0{,}2}$	$9{,}6_{-0{,}7}$
	3–6 gear stages	$7{,}6_{-0{,}2}$	$7{,}6_{-0{,}2}$

AP 60

Dimensions (mm) Ø 64

Height (mm) 6

Adaptor Plate Data AP 60

Adaptor plate	Motor type	Manufacturer	Centring Ø D	Order Reference
AP 6012	G 30	Dunker	12	81B-001-002-010
AP 6022	G 42, GR 42		22	81B-001-002-016
AP 6014	M 28, M 32	GEFEG	14	81B-001-002-012
AP 6022	M 42, M 48		22	81B-001-002-016

Dimensions

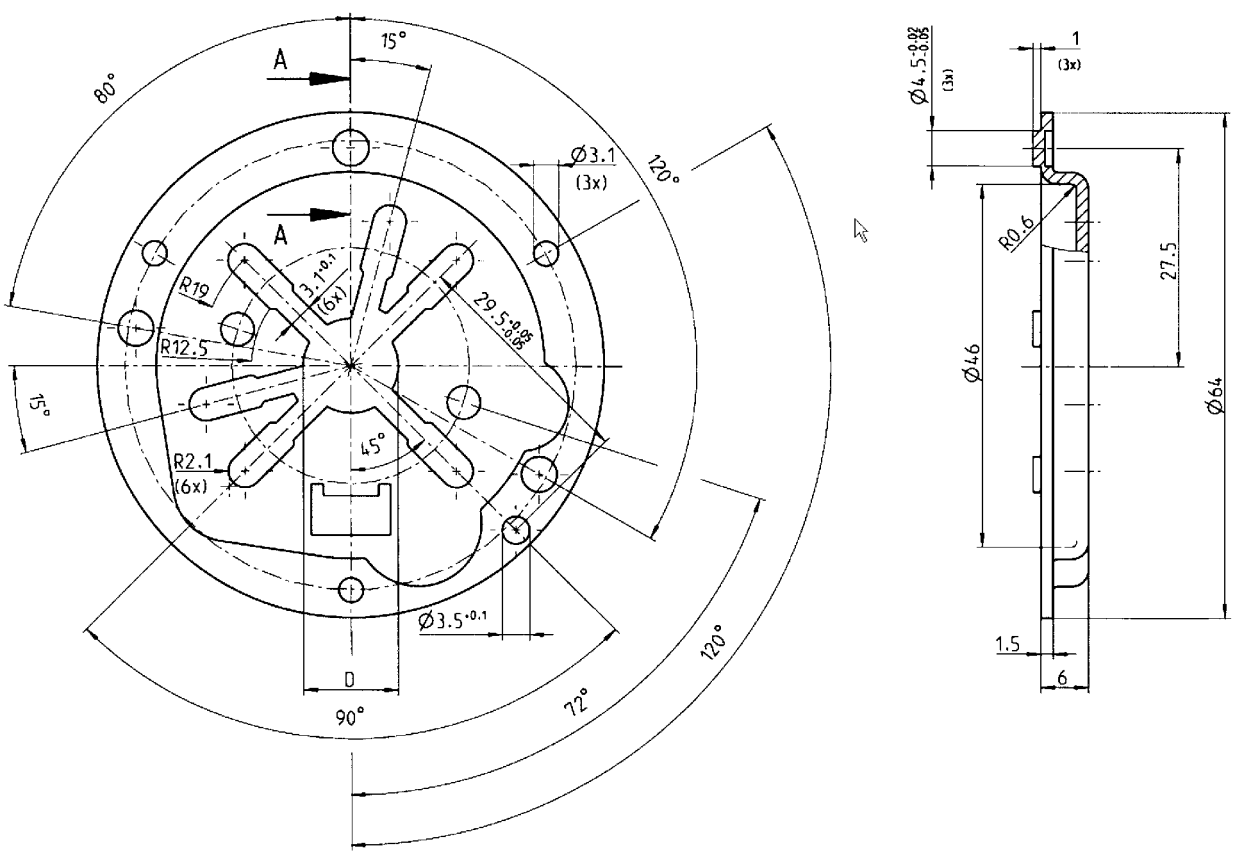

UGJ

Dimensions (mm)	65 x 107
Hight (mm)	28
Max. torque (cNm)	1500
Ratios	4 1/6 ... 36.000.000
Internal slipping clutch	none
Standard shaft (mm)	∅ 12 x 20
Weight (g)	480
Motor combination	Series UB, UD, UF, UH

Standard Data

Mounting	any position
Axial thrust F_A	400 N
Lateral force F_R	600 N
Output shafts	∅ 12 x 20, other on request
Climatic class	wide-spread according to DIN IEC 60721-2-1
Ambient temperature operation	°C -15 ... +55
Ambient temperature storage	°C -40 ... +80

Ratios												
4 1/6	8 1/3	16 2/3	33 1/3	41 2/3	50	66 2/3	83 1/3	100	125	150	166 2/3	200
250	500	1000	2000	2500	3000	4000	5000	6250	8333 1/3	10000	12500	15000
20000	25000	30000	37500	60000	75000	120000	150000	300000	375000	750000	1500000	1800000
2250000	3000000	3600000	4500000	6000000	9000000	11250000	12000000	18000000	36000000			

Order Reference

Type	Gearbox	UGJ	100	N	N
Ratio	100				
Slipping clutch	N Without slipping clutch				
Shaft end	N ∅ 12 x 20, other on request				

Dimensions

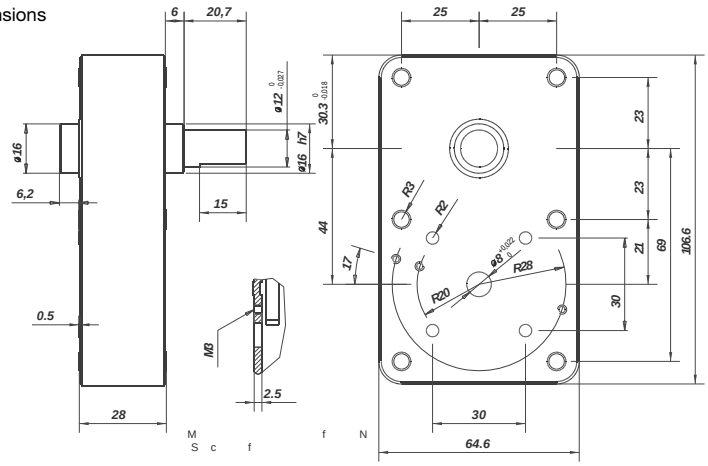

i ≥ 2000

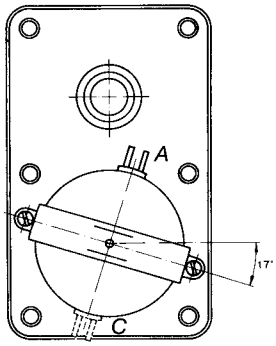

i ≥ 2500

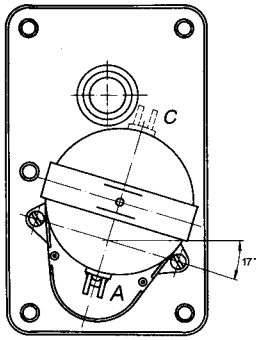

Lead outlet (A = standard position)

UDS 1..J, ≤ 2000

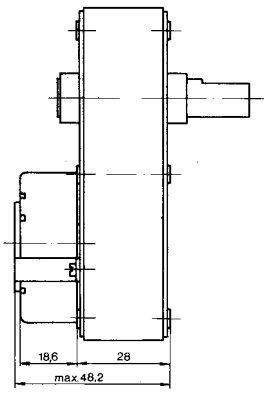

UDS 1..J, ≥ 2500

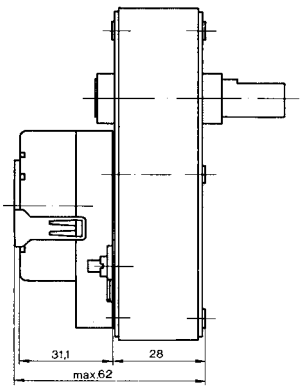

UBR 1/UBR 2..J, ≥ 2500

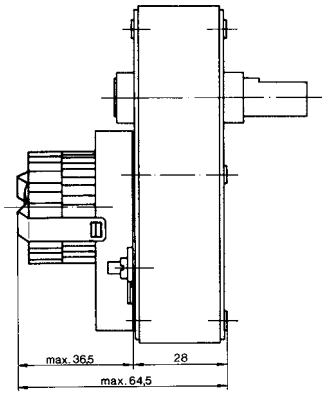

UDR 1..J, ≤ 2000

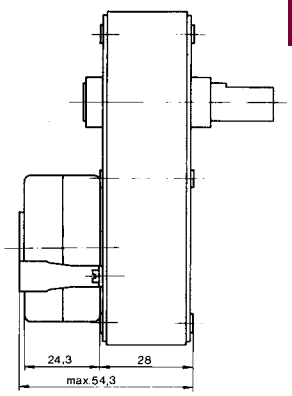

UDR 1..J, i ≥ 2500

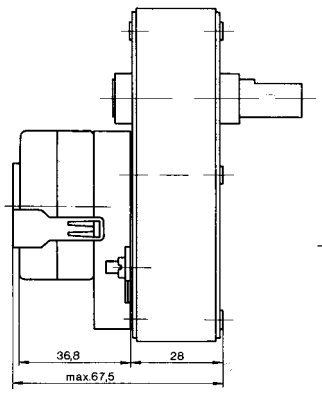

UFM 1/UFR 1..J, i ≤ 2000

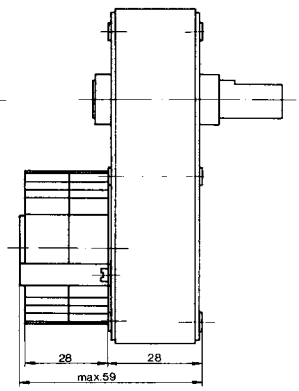

UFR 3..J, i ≤ 2000

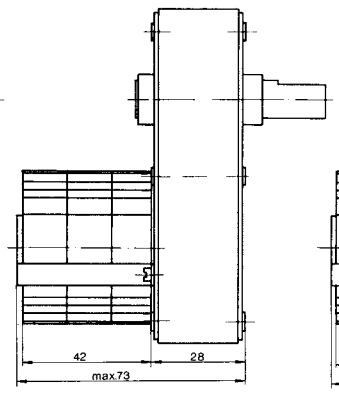

UFR 4..J, i ≤ 2000

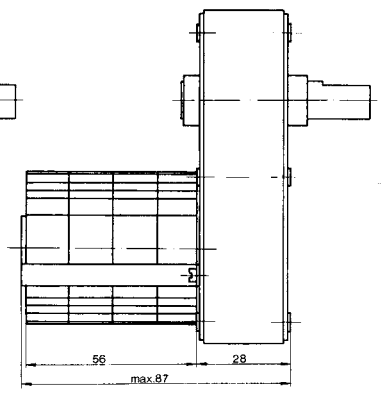

Torque / ratio / life graph

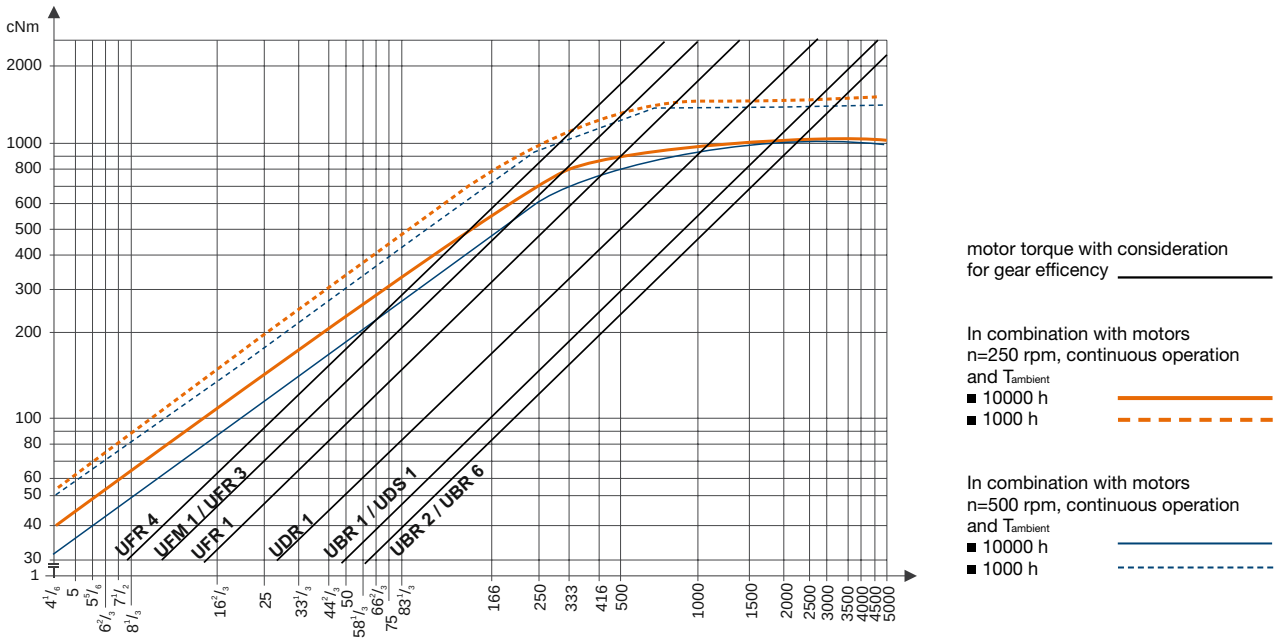

UGR

UGR (STG 200)

Dimensions (mm)	70 x 130
Hight (mm)	38
Max. torque (cNm)	2000
Ratios	6 1/4 ... 375
Internal slipping clutch	none
Standard shaft (mm)	∅ 12 x 35
Weight (g)	depends on ratio
Motor combination	series UN, UO, UF and UP

Standard Data

Mounting		any position
Max. input speed *		3000 min^{-1}
Max. output torque *		2000 cNm
Max. input -and output power *		please refer to table in Technical Data
Average back lash	unload	0,75°
	2/3 stages with 4/10 Nm	1,25°
	4/5 stages with 15/20 Nm	2°
Max. axial force F_A		60 N
Max. lateral force F_R, 20 mm from lange		80 N
Max. axial play		0,3 mm
Max. radial play		83 µm
Working temperature		–10 ... +50 °C
Ambient temperature storage		–40 ... +100 °C

Ratio	6 1/4	12 1/2	25	37 1/2	62 1/2	75	93 3/4	125	375

* Depends on ratio, see next page

Order Reference

Type	Gearbox	STG 200 UGR	6 1/4
Ratio	6 1/4		
optional	motor pinion: see next pages	Motor Pinion Data	

Technical Data

Ratio	Stages *	η	pinion type	Weight	Max. torque (Nm)	Max. input speed (rpm)
6 1/4	2	0,77	1	560	1,8	750
12 1/2	2	0,77	2	560	3,6	750
25	3	0,68	3	580	6,6	750
37 1/2	3	0,68	4	580	9,9	750
62 1/2	4	0,60	5	600	14,6	750
75	4	0,60	6	600	17,5	750
93 3/4	4	0,60	6	600	20	820
125	4	0,60	6	600	20	1100
375	5	0,53	4	620	20	3000

Technical Data valid for a working temperature –10 °C ... +50 °C

* Direction of rotaton of output- and motor-shaft at 2 and 4 stages - same
3 and 5 stages - opposite

Dimensions other shafts on request

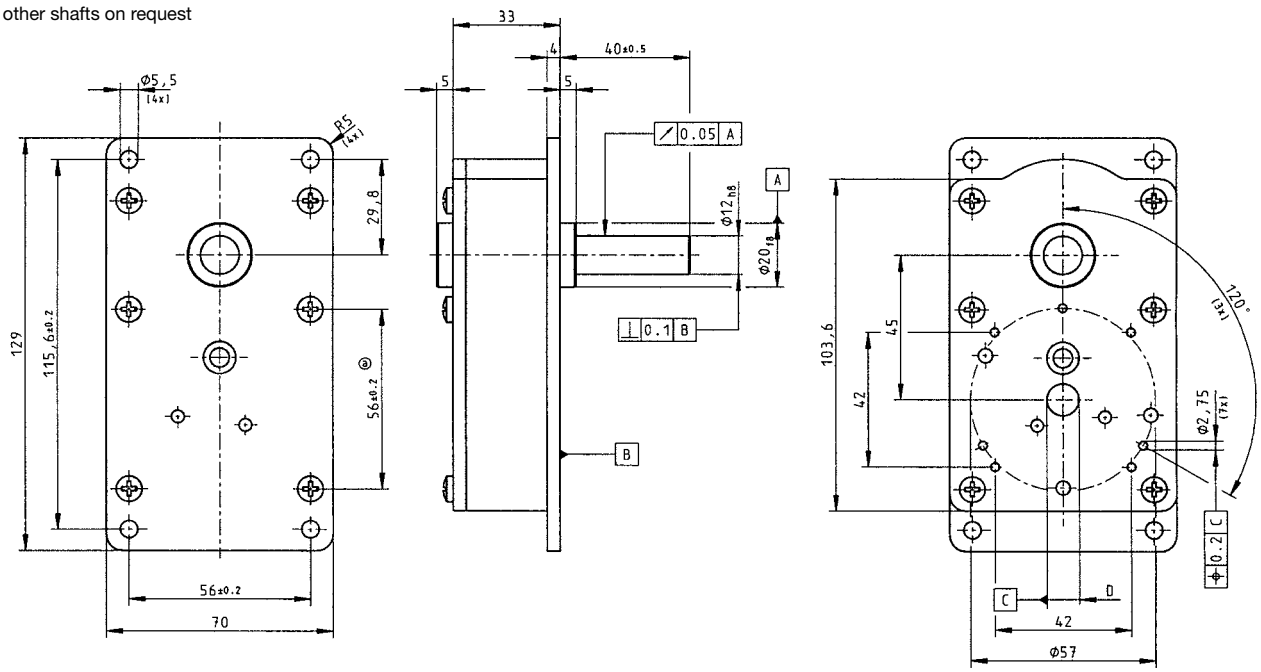

Diameter D = 14^{G8} for ratio i ≤ 25
10^{G8} for ratio i > 25

Motor Pinion Data

pinion type	d	h	D	module	no. of teeth	Order Reference
1	$4{,}0^{X7}$	11,5	12,65	0,56	20	022-100-020-100
	$5{,}0^{S7}$	11,5	12,65	0,56	20	022-100-020-110
2	$4{,}0^{X7}$	11,5	9,11	0,53	14	022-100-020-130
	$5{,}0^{S7}$	11,5	9,11	0,53	14	022-100-020-140
3	$3{,}0^{S7}$	6,8	12,02	0,57	18	022-100-020-200
	$4{,}0^{X7}$	6,8	12,02	0,57	18	022-100-020-210
	$5{,}0^{S7}$	6,8	12,02	0,57	18	022-100-020-220
4	$3{,}0^{S7}$	6,8	9,32	0,5	16	022-100-020-280
	$4{,}0^{X7}$	6,8	9,32	0,5	16	022-100-020-290
	$5{,}0^{S7}$	6,8	9,32	0,5	16	022-100-020-300
5	$3{,}0^{S7}$	11,5	9,82	0,38	24	022-100-020-360
	$4{,}0^{X7}$	11,5	9,82	0,38	24	022-100-020-370
	$5{,}0^{S7}$	11,5	9,82	0,38	24	022-100-020-380
6	$3{,}0^{S7}$	11,5	9,32	0,5	16	022-100-020-400
	$4{,}0^{X7}$	11,5	9,32	0,5	16	022-100-020-410
	$5{,}0^{S7}$	6,8	9,32	0,5	16	022-100-020-300

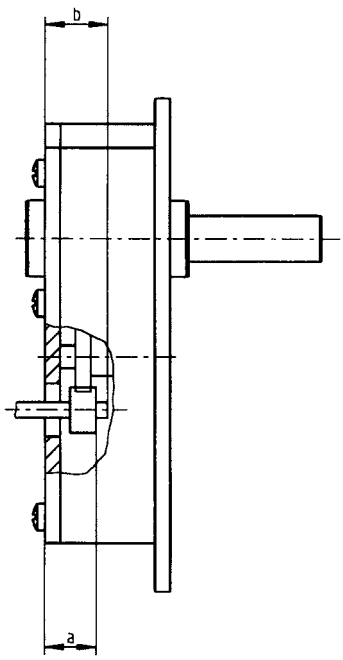

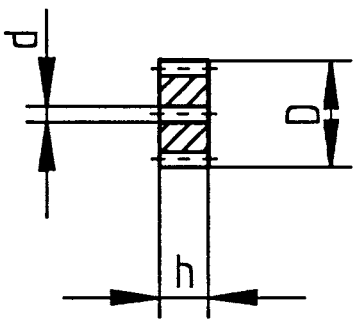

pinion position	Dimension	„a“	„b“ max.	„b“ min.
	2 gear stages	$16{,}1_{-0{,}2}$	28	10
	3 gear stages	$10{,}3_{-0{,}2}$	10,3	8,1
	4 gear stages	$15{,}1_{-0{,}2}$	15	8,1 (13,5 bei ∅ 5)
	5 gear stages	$10{,}9_{-0{,}2}$	11	8,1

Synchronous Motors

Dimensions

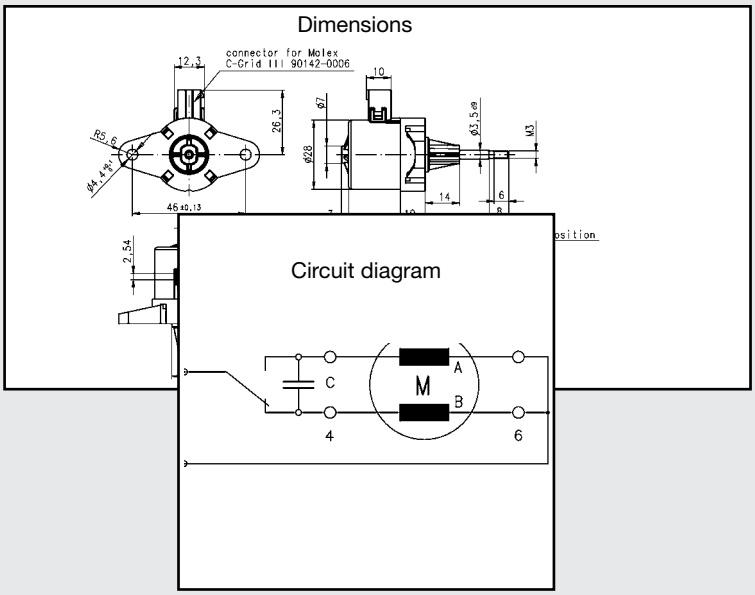

JOHNSON ELECTRIC

innovating motion

UCC1/7

Dimensions (mm)	∅ 28 x 31
Travel (mm)	10/13
Voltage (V) **	12–230
Thread pitch (mm)	1,0
Speed (mm/s)	
50 Hz	4,16
60 Hz	5
Pole number	24
Max. Force (N)*	35

* Depends on winding, frequency and lifetime required. Values for connector versions (C, D) / lead wire versions (N) up to 20 % lower.
Drive against end stops only permissible after clarification of operating conditions and approval by Saia motors.
Radial forces on the shaft will reduce life time and performance.

** regard circuit diagram and connector type

Standard Data

Climatic class	wide-spread according to DIN IEC 60721-2-1
Ambient temperature operation	°C -15 ... +60
Ambient temperature storage	°C -20 ... +100
Thermal resistance at f=0 R_{therm}	29 K/W
Thermal class	B according to DIN EN 60085
Winding coil temperature increase	K 60
Approval	standard
Mounting	any position
Electrical connection	connector type C, D, N
Protection	IP 40 according to DIN EN 60529
Weight	67 g
Rotor stalling	motor can be stopped when voltage is applied, without being overheated
Bearings	ball bearing

Order Reference

Type	Synchronous Motor						UCC	13	N	24 V / 50 Hz	B	1A
Configuration	13	standard magnet	73	stronger magnet								
Approval	N											
Voltage/frequency		see next pages										
Connection	C D	see pages 174, „Connection Types“										
Shaft	1B	Travel 13 mm ± 0,7 mm (others on request)										

Technical Data

bipolar	Rated frequency	Hz	50		
	Axial speed	mm/s	4,16		
	Tolerance of voltage		standard power supply system +10% / –10%		
	Linear travel max.	mm	10/13		
	Axial play at ± 20 N force	mm	< 0,25		
	Duty cycle		100 %		
	Winding temperature T_{max}		130		
Capacitors	Rated voltage U_N	V	12	24	110
	Operating capacitor C_{50}	µF/V~	18/20	4,7/40	0,33/200

Circuit diagram

Parallel circuit 12 V, 24 V, 48 V

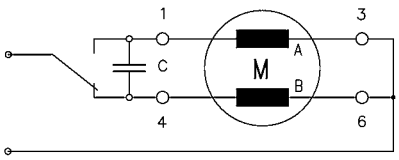

Parallel circuit 230 V (only for connector N)
with 110 V motor and resistor R_V

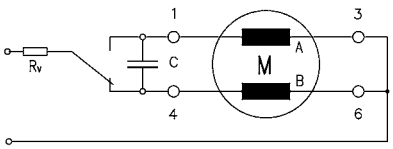

R_V = 5,6 kΩ, 3 W

Series circuit 110 V (only for connector N)

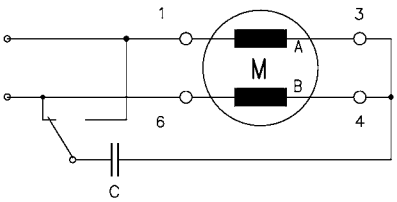

Parallel circuit 230 V (only for connector N)
with 110 V motor and capacitor C_V

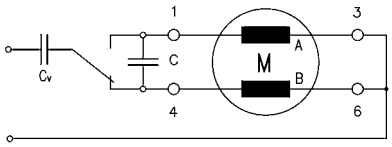

C_V = 0,33 µF, 250 VAC

switch to

1 Pull (in)

4 Push (out)

6 Push (out)
(for series circuit)

Dimensions Version with Connector D, with 13 mm travel

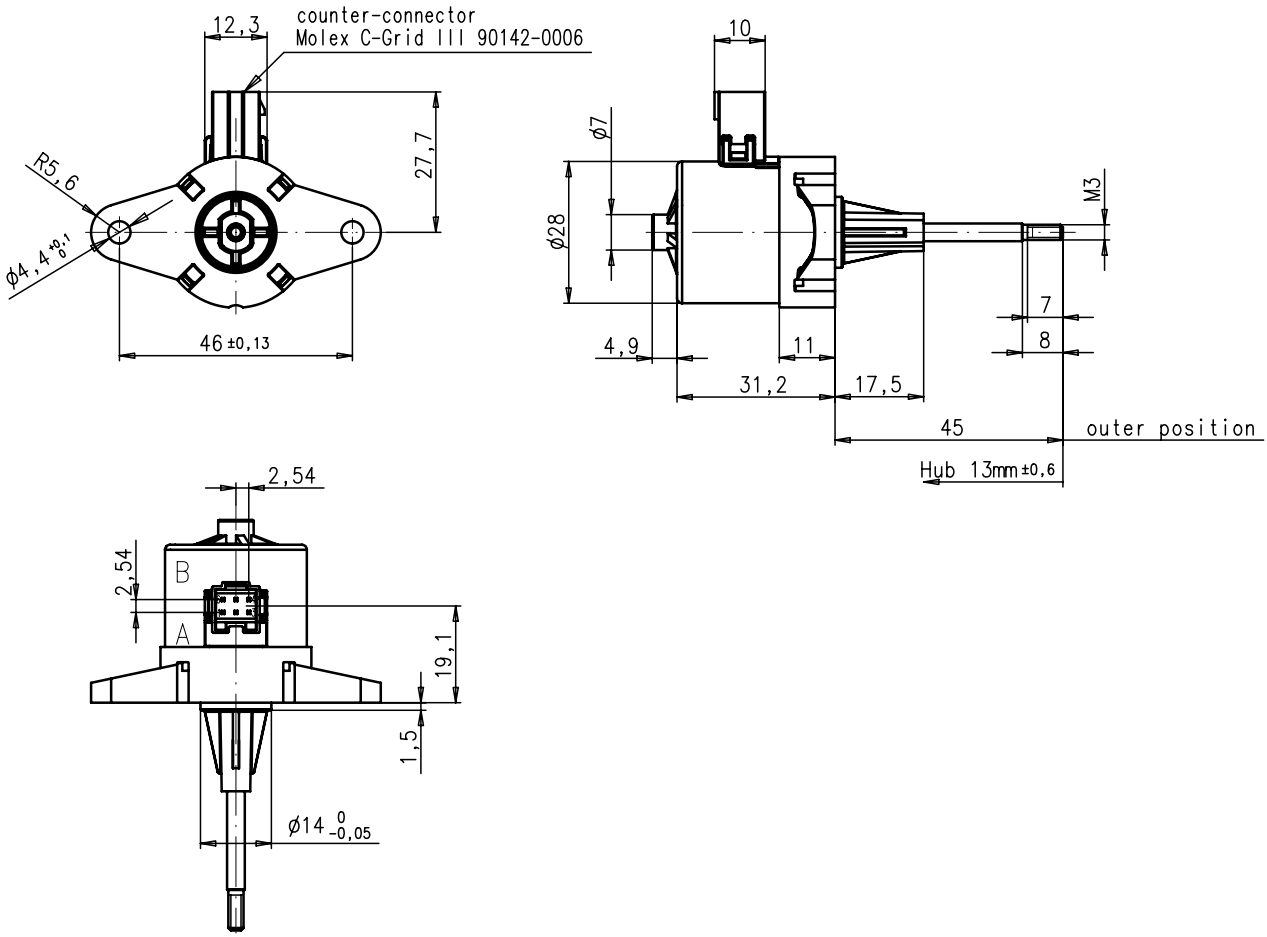

UCK 1/7

Dimensions (mm)	∅ 28 x 31
Travel (mm)	10/13
Voltage (V) **	12–230
Thread pitch (mm)	1,0
Speed (mm/s)	
50 Hz	8,33
60 Hz	10
Pole number	12
Max. Force (N)*	35

* Depends on winding, frequency and lifetime required. Values for connector versions (C, D) / lead wire versions (N) up to 20 % lower.
Drive against end stops only permissible after clarification of operating conditions and approval by Saia motors.
Radial forces on the shaft will reduce life time and performance.

** regard circuit diagram and connector type

Standard Data

Climatic class	wide-spread according to DIN IEC 60721-2-1
Ambient temperature operation	°C -15 ... +60
Ambient temperature storage	°C -20 ... +100
Thermal resistance at f=0 R_{therm}	29 K/W
Thermal class	B according to DIN EN 60085
Winding coil temperature increase	K 60
Approval	standard
Mounting	any position
Electrical connection	connector type C, D, N
Protection	IP 40 according to DIN EN 60529
Weight	67 g
Rotor stalling	motor can be stopped when voltage is applied, without being overheated
Bearings	ball bearing

Order Reference

Type	Synchronous Motor					UCK	13	N	24 V / 50 Hz	D	1A
Configuration	13	standard magnet	73	stronger magnet							
Approval	N										
Voltage/frequency		see next page									
Connection	C D	see pages 174, „Connection Types“									
Shaft	1B	Travel 13 mm ± 0,7 mm (other on request)									

Technical Data

Rated frequency	Hz	50		
Speed	mm/s	8,33		
Tolerance of voltage		standard power supply system +10% / –10%		
Linear travel max.	mm	10/13		
Axial play at 20 N force	mm	< 0,25		
Duty cycle		100 %		
Winding temperature T_{max}		130		
Capacitors — Rated voltage U_N	V	12	24	110
Operating capacitor C_{50}	µF/V~	22/20	5,6/40	0,27/200

Circuit diagram

Parallel circuit 12 V, 24 V, 48 V

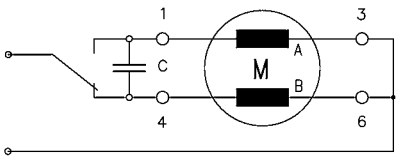

Parallel circuit 230 V (only for connector N)
with 110 V motor and resistor R_V

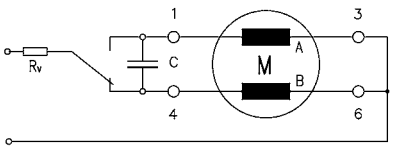

R_V = 5,6 kΩ, 3 W

Series circuit 110 V (only for connector N)

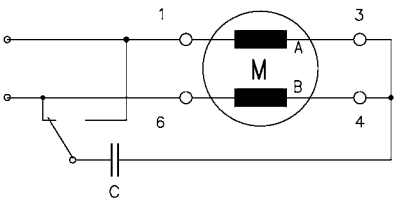

Parallel circuit 230 V (only for connector N)
with 110 V motor and capacitor C_V

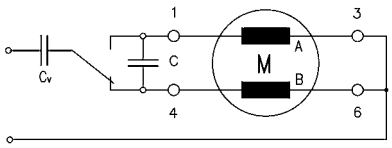

C_V = 0,33 µF, 250 VAC

switch to

1 Pull (in)

4 Push (out)

6 Push (out)
(for series circuit)

Dimensions Version with Connector D, with 13 mm travel

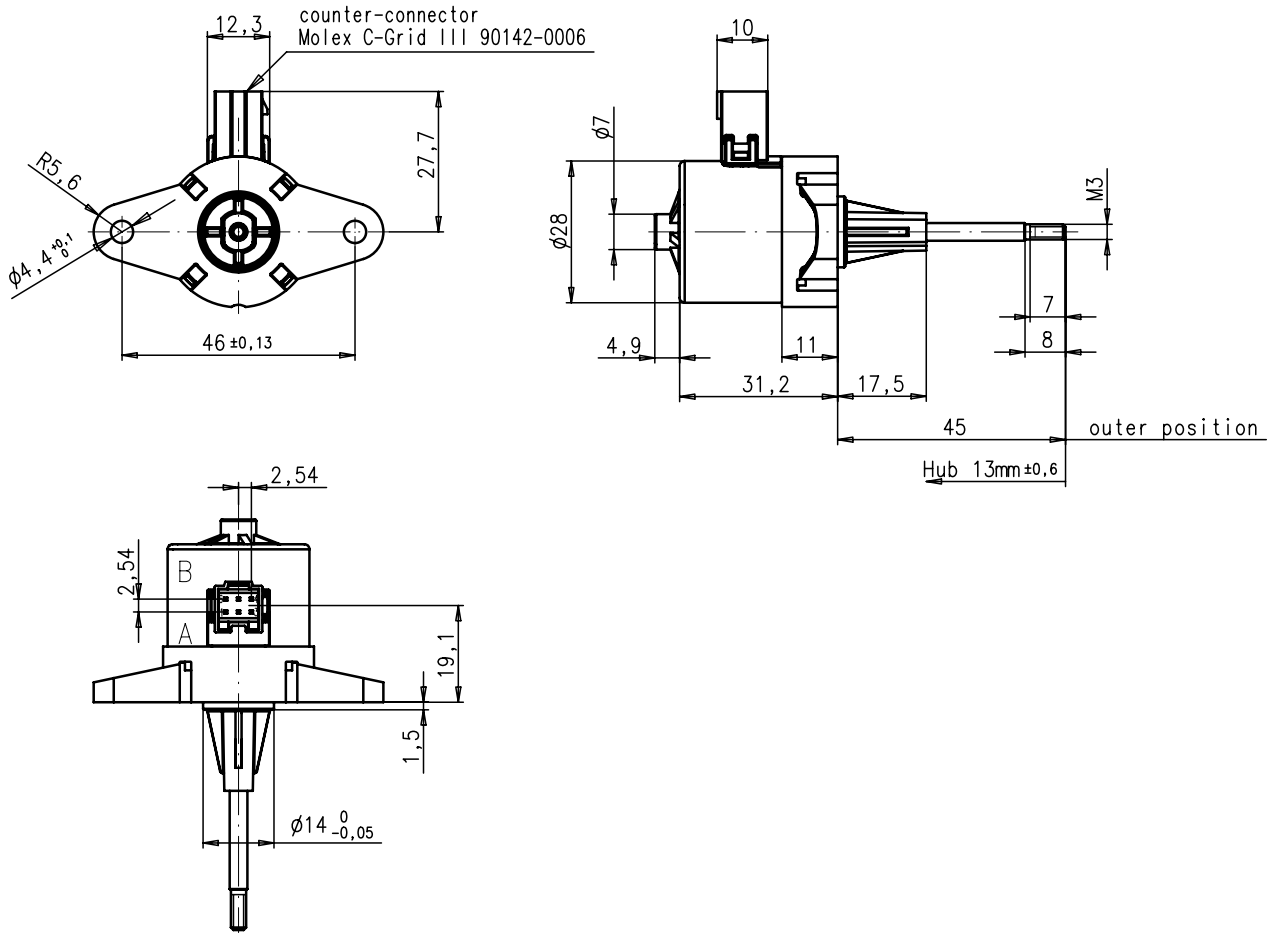

UBK1

Dimensions (mm)	∅ 36 x 36
Travel (mm)	8/13/56 ± 0,7
Voltage (V)	12–230
Thread pitch (mm)	1,0
Speed (mm/s)	
50 Hz	6,67/8,33
60 Hz	8/10
Pole number	12
Max. Force (N)*	35
Lifetime	on request

*Depends on winding, frequency and lifetime required.
Drive against end stops only permissible after clarification of operating conditions and approval by Saia-Burgess.
Radial forces on the shaft will reduce life time and performance.

Standard Data

Climatic class	wide-spread according to DIN IEC 60721-2-1
Ambient temperature operation	°C -15...+60
Ambient temperature storage	°C -20...+100
Thermal resistance at f=0 R_{therm}	27 K/W
Thermal class	A according to DIN EN 60085
Approval	Standard
Mounting	any position
Electrical connection	jack connector
Protection	IP 40 according to DIN EN 60529
Weight	90 g
Rotor stalling	motor can be stopped when voltage is applied without being overheated, with controlled duty cycle
Bearings	ball bearing, for live time lubricated
Electric strength	according to DIN EN 60034-1/DIN EN 60335-1

Order Reference

Type	Synchronous Motor	UBK1	N	12V/50Hz	B	3C
Approval	N Approval Standard					
Voltage/Frequency	See next page					
Connector	6 pole connector (other on request)					
Shaft	3C Travel 8 mm ± 0,7 mm (other on request)					

Technical Data

Rated frequency		Hz	50	60
	Axial speed	mm/sec	8,33	10
	Tolerance of voltage		standard power supply system + 10% / - 10%	
	Linear travel max.	mm	8; 13; 56 ± 0,7	
	Axial play at ± 20 N force	mm	< 0,25	
	Duty cycle		100%	
	Winding temperature T_{max}	°C	105°C	
Capacitors	Rated voltage U_N	V	24	48
	Operation capacitor C_{50}	µF/VAC	3,9/40	1,0/70
	Operation capacitor C_{60}	µF/VAC	3,9/40	1,0/70

Dimensions

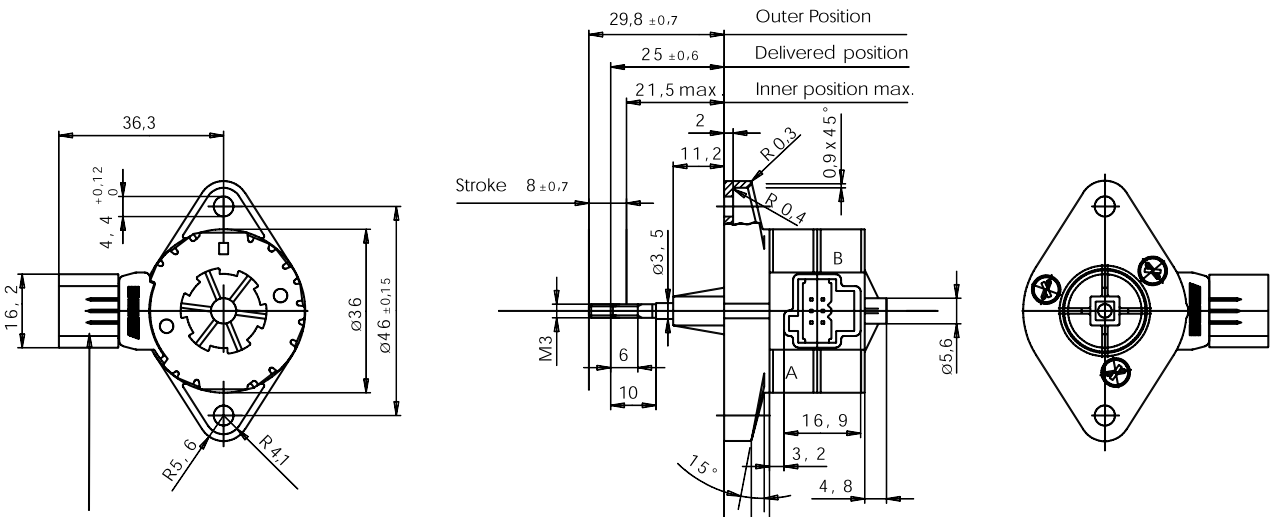

1	connector B	AMP 829 836-1	
2	connector C	AMP 963 004-1	
3	connector D	for Molex C-Grid-III	90142-0006

UO Linear actuator (LA5021SM)

Dimensions (mm)	∅ 50 x 76
Travel (mm)	45–50
Voltage (V)	12–230
Thread pitch (mm)	1,5/1,5/1,5
Speed (mm/s)	
50 Hz	6,25/9,37/12,5
60 Hz	7,5/11,25/15
Pole number	24/16/12
Max. Force (N)*	45–50

* Depends on winding, frequency and lifetime required.
Drive against end stops only permissible after clarification of operating conditions and approval by Saia-Burgess.
Radial forces on the shaft will reduce life time and performance.

Standard Data

Climatic class	wide-spread according to DIN IEC 60721-2-1
Ambient temperature operation	°C -15 ... +40
Ambient temperature storage	°C -20 ... +100
Thermal class	A according to DIN EN 60085
Winding coil temperature increase	K 85
Approval	standard
Mounting	any position
Electrical connection	cable
Protection	IP 40 according to DIN EN 60529
Weight	~ 220 g
Rotor stalling	motor can be stopped when voltage is applied, without being overheated
Bearings	ball bearing

Order Reference

Type	Synchronous Motor	LA 5021 SM	24 V	6,25 mm/s	45 mm
Nominal Voltage	24 V 50/60 Hz 110 V 50/60 Hz 230 V 50/60 Hz				
Operating speed at 50 Hz	6,25 mm/s 9,375 mm/s 12,5 mm/s				
Travel	50 mm				

Technical Data

Speed 50 Hz	mm/s	6,25	9,375	12,5
60 Hz	mm/s	7,5	11,25	15
Push/Pull force	N	5050	45	

Linear travel	mm	50
Axial play	mm	± 0,1
Static axial force	N	max. 100
self-locking by spindle/nut system		yes
Drive		not stall-proof
Anti-rotation guidance of spindle		built in

Capacitors	at U_N: 24 V	µF/V~	15/63
	at U_N: 110 V	µF/V~	0,75/250
	at U_N: 230 V	µF/V~	0,18/500

Circuit diagram Parallel circuit

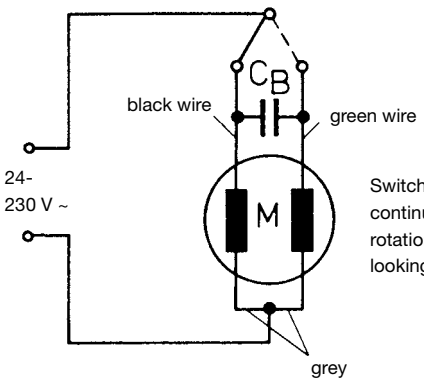

Switch position drawn with a continuous line results in clockwise rotation as viewed when looking at the motor shaft.

Dimensions

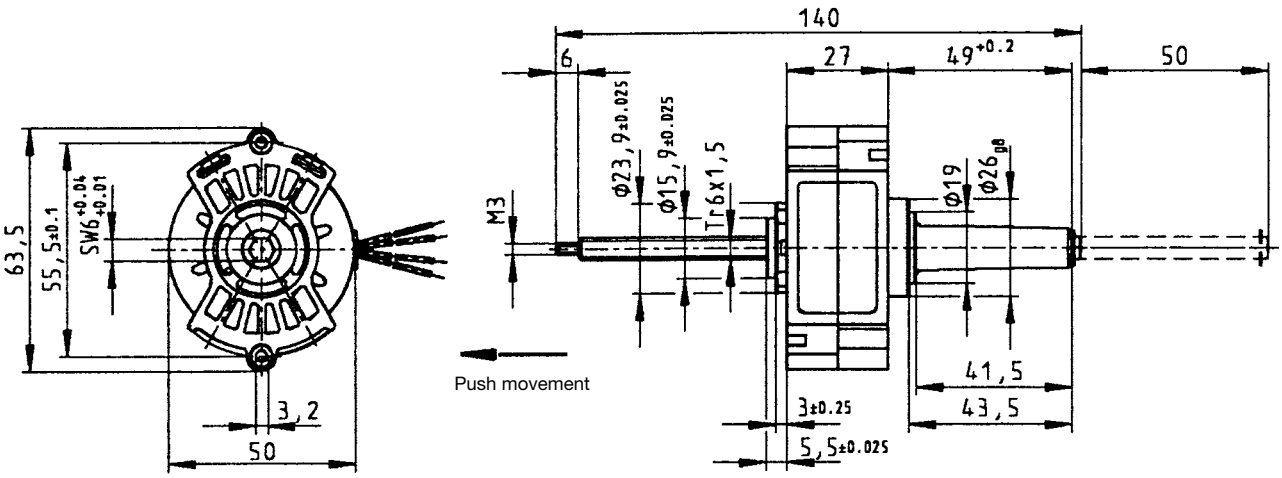

Standard - wire length: 100+20 mm/6±1 stripped

Chart: Force versus voltage

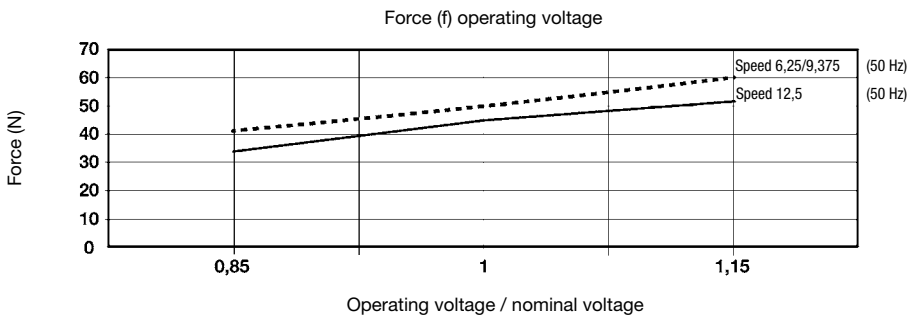

UO Spindle actuator (SP5021SM; SP5022SM)

Dimensions (mm)	∅ 50 x 27
Travel (mm)	68–130
Voltage (V)	12–230
Thread pitch (mm)	1,5/1,5/1,5
Speed (mm/s) 50 Hz 60 Hz	 6,25/9,375/12,5 7,5/11,25/15
Pole number	24/16/12
Max. Force (N)*	45–50 (SP5021SM); 50–70 (SP5022SM)

* Depends on winding, frequency and lifetime required.
Drive against end stops only permissible after clarification of operating conditions and approval by Saia-Burgess.
Radial forces on the shaft will reduce life time and performance.

Standard Data

Climatic class	wide-spread according to DIN IEC 60721-2-1
Ambient temperature operation	°C -15 ... +40
Ambient temperature storage	°C -20 ... +100
Thermal class	A according to DIN EN 60085
Winding coil temperature increase	K 85
Approval	standard
Mounting	any position
Electrical connection	cable
Protection	IP 40 according to DIN EN 60529
Weight	~ 220 g
Rotor stalling	motor can be stopped when voltage is applied, without being overheated
Bearings	ball bearing

Order Reference

Type	Synchronous Motor	SP5021SM / SP5022SM	24 V	6,25 mm/s	68 mm
Nominal Voltage	24 V 50/60 Hz 110 V 50/60 Hz 230 V 50/60 Hz				
Speed at 50 Hz	6,25 mm/s 9,375 mm/s 12,5 mm/s				
Travel	68 mm 130 mm				

Technical Data

SP5021SM	Speed 50 Hz	mm/s	6,25	9,375	12,5
	60 Hz	mm/s	7,5	11,25	15
	Push/Pull force	N	50	50	45
	Linear travel	mm	~68/ ~130		
	Axial play	mm	± 0,1		
	Static axial force	N	max. 100		
	self-locking by spindle/nut system		yes		
	Drive		not stall-proof		
	Anti-rotation guidance of spindle		external required		
Capacitors	at U_N: 24 V	µF/V~	15/63		
	at U_N: 110 V	µF/V~	0,75/250		
	at U_N: 230 V	µF/V~	0,18/500		

SP5022SM	Speed 50 Hz	mm/s	6,25	9,375	12,5
	60 Hz	mm/s	7,5	11,25	15
	Push/Pull force	N	70	70	50
	Linear travel	mm	~68/ ~130		
	Axial play	mm	± 0,1		
	Static axial force	N	max. 100		
	self-locking by spindle/nut system		yes		
	Drive		not stall-proof		
	Anti-rotation guidance of spindle		external required		
Capacitors	at U_N: 24 V	µF/V~	15/63		
	at U_N: 110 V	µF/V~	0,75/250		
	at U_N: 230 V	µF/V~	0,18/500		
Circuit diagram	Parallel circuit				

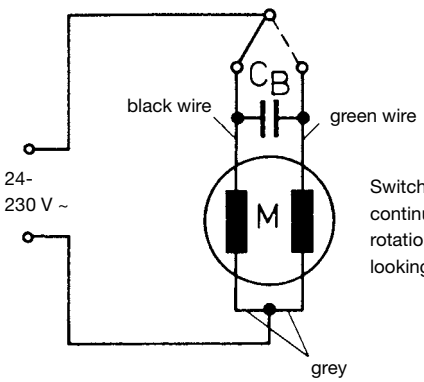

Switch position drawn with a continuous line results in clockwise rotation as viewed when looking at the motor shaft.

Dimensions Version with Travel 68 mm
130 mm

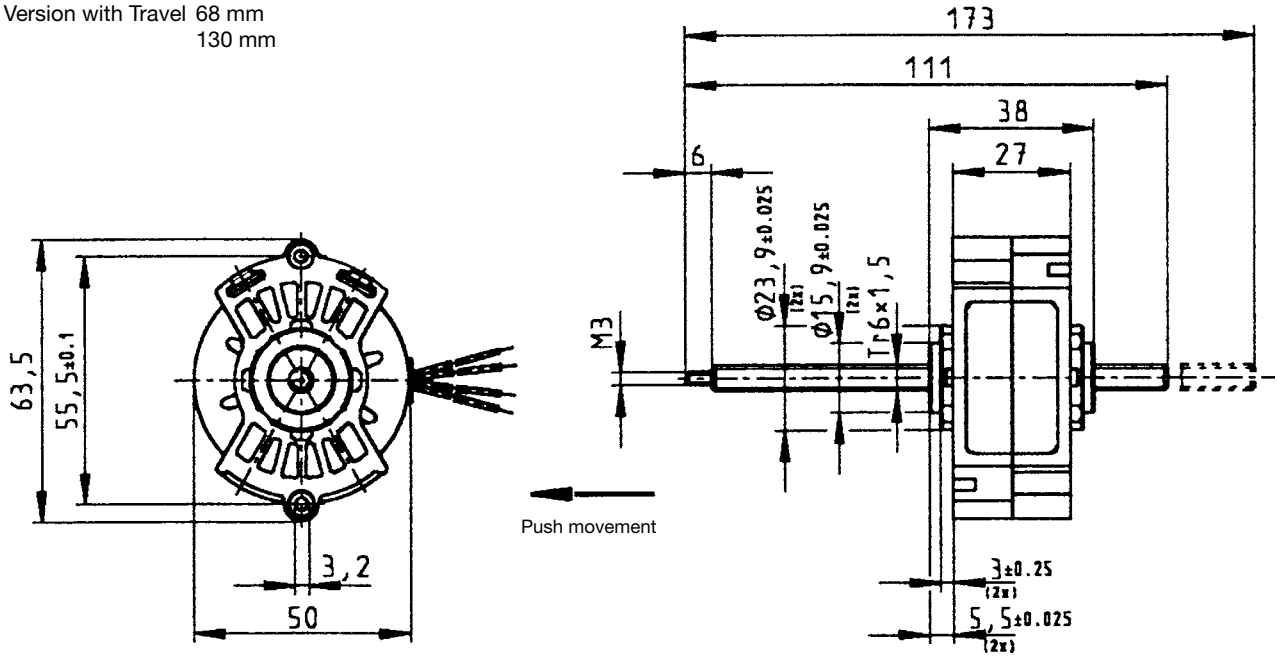

Standard - wire length: 100+20 mm/6±1 stripped

Chart: Force versus voltage

SP5021SM

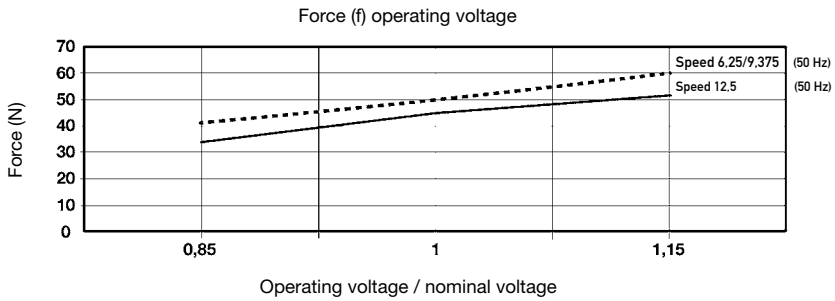

SP5022SM

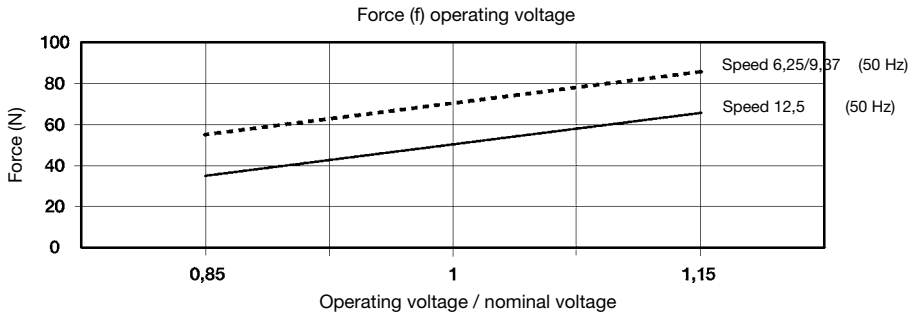

Stepper Motors

Dimensions

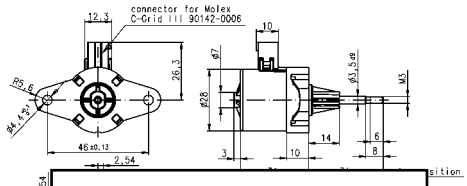

Circuit diagram

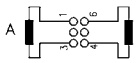

stepping sequence number

Pin number	I	II	III	IV	I
1	+	+	–	–	+
3	–	–	+	+	–
4	–	+	+	–	–
6	+	–	–	+	+

Pull in (step I to IV, I to IV, etc.)

Push out (step IV to I, step IV to I, etc.)

JOHNSON ELECTRIC

innovating motion

UCE1/7; UCE2/8

Dimensions (mm)	∅ 28 x 31
Travel (mm)	10/13
Travel per step (mm)	0,021
Thread pitch (mm)	1,0
Speed (mm/s) at 200 Hz	4,16
Step angle (°)	7,5
Max. Force (N)*	35

*Depends on winding, frequency and lifetime required.
Drive against end stops only permissible after clarification of operating conditions and approval by Saia-Burgess.
Radial forces on the shaft will reduce life time and performance.

Standard Data

Climatic class	wide-spread according to DIN IEC 60721-2-1
Ambient temperature operation	°C -15 ... +60
Ambient temperature storage	°C -20 ... +100
Thermal resistance at f=0 R_{therm}	29 K/W
Thermal class	B according to DIN EN 60085
Approval	standard
Mounting	any position
Electrical connection	connector type C, D
Protection	IP 40 according to DIN EN 60529
Weight	67 g
Rotor stalling	motor can be stopped when voltage is applied, without being overheated
Bearings	ball bearing

Order Reference

Type	Stepper Motor						UCE	13	N	24 Ω	B	1A
Configuration	13	bipolar, standard magnet	73	bipolar, stronger magnet								
	23	unipolar, standard magnet	83	unipolar, stronger magnet								
Approval	N											
Resistance		see next page, Resistance per winding for bipolar or unipolar										
Connection	C	see pages 174, „Connection Types“										
	D											
Shaft	1B	Travel 13 mm ± 0,7 mm (others on request)										

Technical Data

bipolar	type		UCE1	UCE1	UCE7	UCE7
	Operating frequency	Hz	100	200	100	200
	max. Push/Pull force * 30% duty cycle	N	49	42	50	50
	100% duty cycle	N	42	28	49	39
unipolar	type		UCE2	UCE2	UCE8	UCE8
	Operating frequency	Hz	100	200	100	200
	max. Push/Pull force * 30% duty cycle	N	35	28	49	39
	100% duty cycle	N	21	17	29	23

Rated voltage U_N:	V	6	12	24
Resistance per winding R_{20}	Ω	24	90	380
Steps per mm		48		
Duty cycle		100 %		
Winding temperature T_{max}	°C	130		
Linear travel max.	mm	10/13		
Axial play at ± 20 N force	mm	< 0,25		

* measured at 23 °C, lifetime depends on load characteristics and ambient conditions

Circuit diagram bipolar

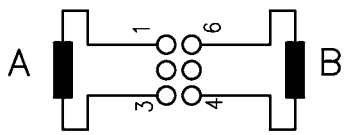

stepping sequence number

pin number	I	II	III	IV	I
1	+	+	–	–	+
3	–	–	+	+	–
4	–	+	+	–	–
6	+	–	–	+	+

Pull in (step I to IV, I to IV, etc.)

Push out (step IV to I, step IV to I, etc.)

unipolar

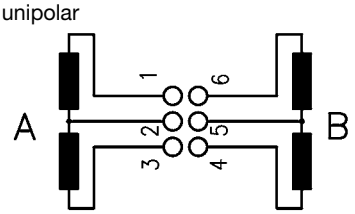

stepping sequence number

pin number	I	II	III	IV	I
1	–	–			–
2	+	+	+	+	+
3			–	–	
4		–	–		
5	+	+	+	+	+
6	–			–	–

Pull in (step I to IV, I to IV, etc.)

Push out (step IV to I, step IV to I, etc.)

Linear

Dimensions Version with connector D, 13 mm travel

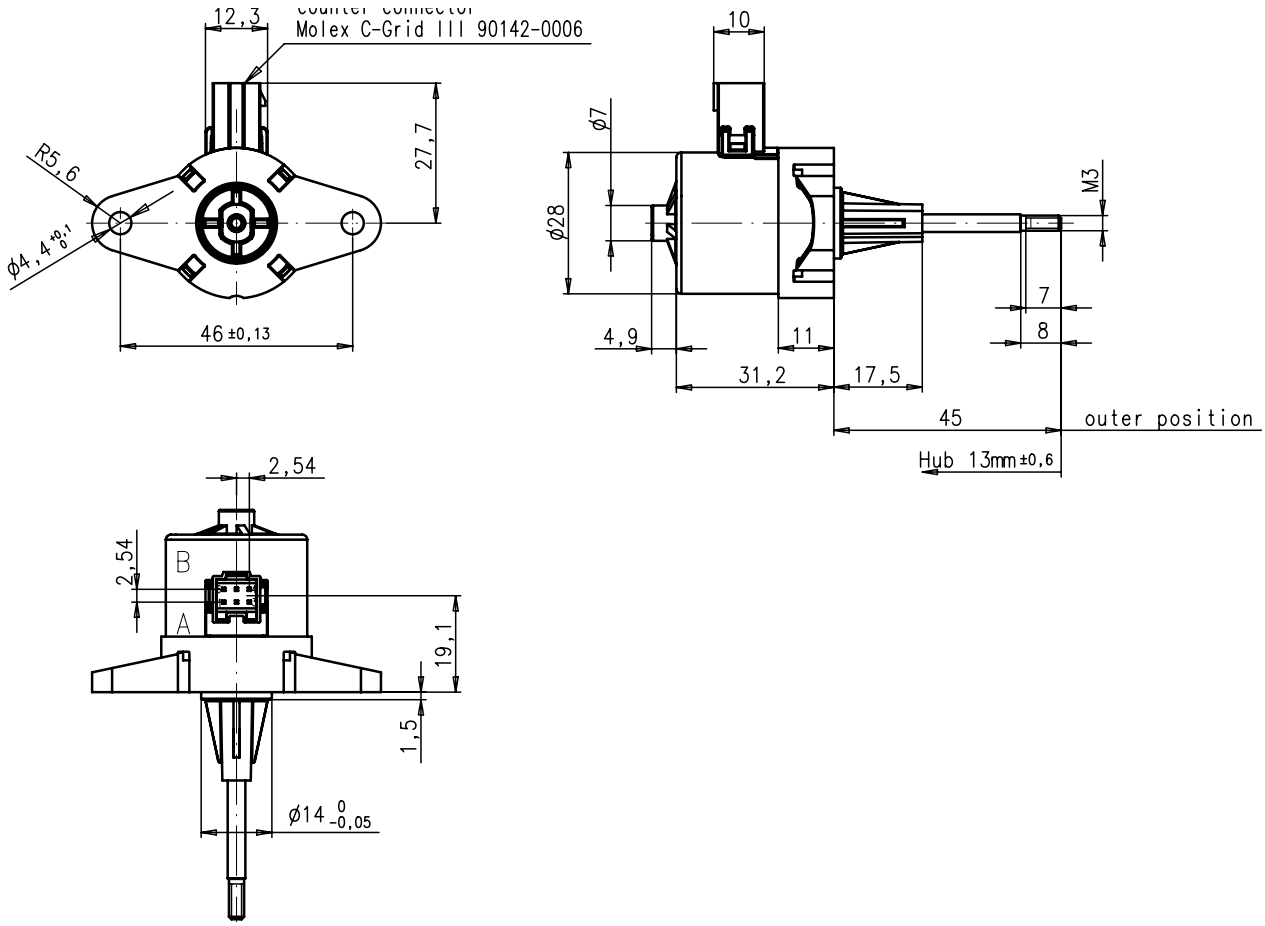

UCL1/7; UCL2/8

Dimensions (mm)	∅ 28 x 31
Travel (mm)	10/13
Travel per step (mm)	0,041
Thread pitch (mm)	1,0
Speed (mm/s) at 200 Hz	8,33
Step angle (°)	15
Max. Force (N)*	35

*Depends on winding, frequency and lifetime required.
Drive against end stops only permissible after clarification of operating conditions and approval by Saia-Burgess.
Radial forces on the shaft will reduce life time and performance.

Standard Data

Climatic class	wide-spread according to DIN IEC 60721-2-1
Ambient temperature operation	°C -15 ... +60
Ambient temperature storage	°C -20 ... +100
Thermal resistance at f=0 R_{therm}	29 K/W
Thermal class	B according to DIN EN 60085
Approval	standard
Mounting	any position
Electrical connection	connector type C, D
Protection	IP 40 according to DIN EN 60529
Weight	67 g
Rotor stalling	motor can be stopped when voltage is applied, without being overheated
Bearings	ball bearing

Order Reference

Type	Stepper Motor				UCL	13	N	24 Ω	B	1A
Configuration	13	bipolar, standard magnet	73	bipolar, stronger magnet						
	23	unipolar, standard magnet	83	unipolar, stronger magnet						
Approval	N									
Resistance		see next page, Resistance per winding for bipolar or unipolar								
Connection	C	see pages 174, „Connection Types“								
	D									
Shaft	1B	Travel 13 mm ± 0,7 mm (others on request)								

Technical Data

bipolar	type			UCL1	UCL1	UCL7	UCL7
	Operating frequency		Hz	100	200	100	200
	max. Push/Pull force *	30% ED	N	35	30	50	45
		100% ED	N	30	20	35	28
unipolar	type			UCL2	UCL2	UCL8	UCL8
	Operating frequency		Hz	100	200	100	200
	max. Push/Pull force *	30% ED	N	25	20	35	28
		100% ED	N	15	12	21	17

Rated voltage U_N:	V	6	12	24
Resistance per winding R_{20}	Ω	24	90	380
Steps per mm		24		
Duty cycle		100 %		
Winding temperature T_{max}	°C	130		
Linear travel max.	mm	10/13		
Axial play at ± 20 N force	mm	< 0,25		

* measured at 23 °C, lifetime depends on load characteristics and ambient conditions

Circuit diagram

bipolar

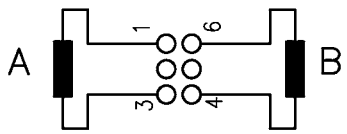

stepping sequence number

pin number	I	II	III	IV	I
1	+	+	–	–	+
3	–	–	+	+	–
4	–	+	+	–	–
6	+	–	–	+	+

→ Pull in (step I to IV, I to IV, etc.)

← Push out (step IV to I, step IV to I, etc.)

unipolar

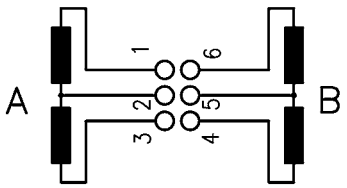

stepping sequence number

pin number	I	II	III	IV	I
1	–	–			–
2	+	+	+	+	+
3			–	–	
4		–	–		
5	+	+	+	+	+
6	–			–	–

→ Pull in (step I to IV, I to IV, etc.)

← Push out (step IV to I, step IV to I, etc.)

Dimensions Version with connector D, 13 mm travel

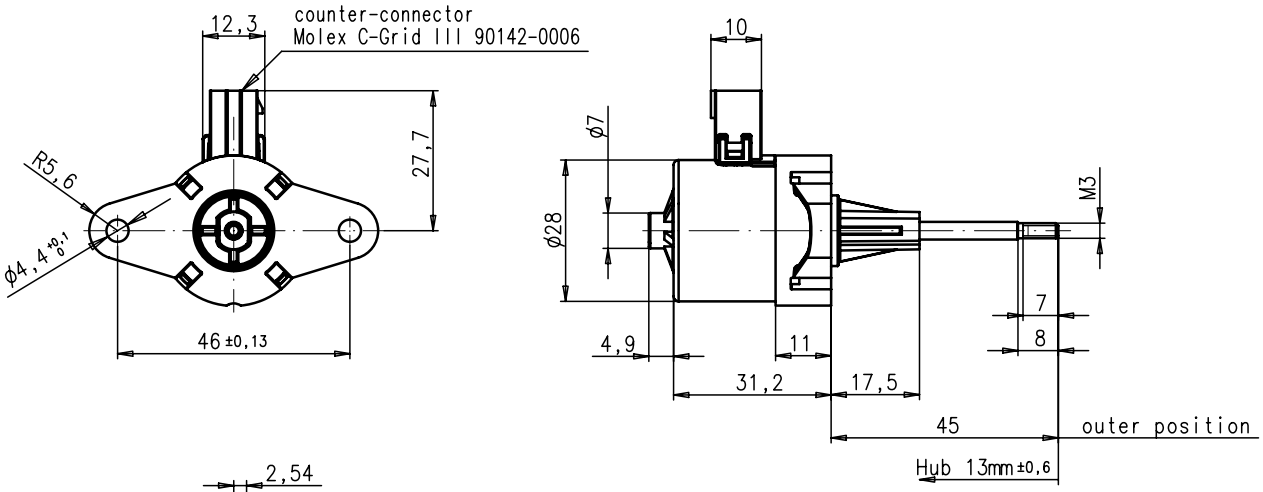

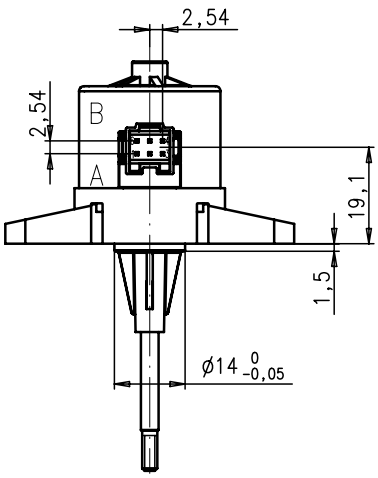

UBL1/2

Dimensions (mm)	∅ 36 x 36
Travel (mm)	8; 13; 56 ± 0,7
Travel per step (mm)	0,041
Thread pitch (mm)	0,8
Speed (mm/s) at 200 Hz	8.33
Step angle (°)	15
Max. Force (N)*	35 (for special winding, lower lifetime)
Lifetime	on request

*Depends on winding, frequency and lifetime required.
Drive against end stops only permissible after clarification of operating conditions and approval by Saia-Burgess.
Radial forces on the shaft will reduce life time and performance.

Standard Data

Climatic class	wide-spread according to DIN IEC 60721-2-1
Ambient temperature operation	°C -15...+60
Ambient temperature storage	°C -20...+100
Thermal resistance at f=0 R_{therm}	27 K/W
Thermal class	A according to DIN EN 60085
Approval	standard
Mounting	any position
Electrical connection	jack connector
Protection	IP 40 according to DIN EN 60529
Weight	90 g
Rotor stalling	motor can be stopped when voltage is applied, without being overheated
Bearings	ball bearing, for live lubricated
Electric strength	according to DIN EN 60034-1/DIN EN 60335-1

Order Reference

Type	Stepper Motor		UBL	13	N	100	B	3C
Configuration	13	bipolar						
	23	unipolar						
Approval	N	Approval Standard						
Resistance		See next page Resistance per winding for bipolar or unipolar.						
Connection		Jack connector 6 pin (other on request)						
Shaft	3C	Travel 8 mm ± 0,7 mm / Tr. 3,7 x 1 (other on request)						

Technical Data

bipolar (UBL1)	Rated voltage U_N	V	6	12	24
	Resistance per winding R_{20}	Ω	18,5	100	460
unipolar (UBL2)	Rated voltage U_N	V	6	12	24
	Resistance per winding R_{20}	Ω	28	120	500
	Steps per revolution	24			
	Steps per mm	30/24			
	Winding temperature T_{max}	105° C			
	Duty cycle	100%			
	Linear travel max.	8; 13; 56 ± 0,7			
	Axial play at ± 20 N force	< 0,25 mm			
	Axial force at 200 Hz F_A	10 N			

Dimensions

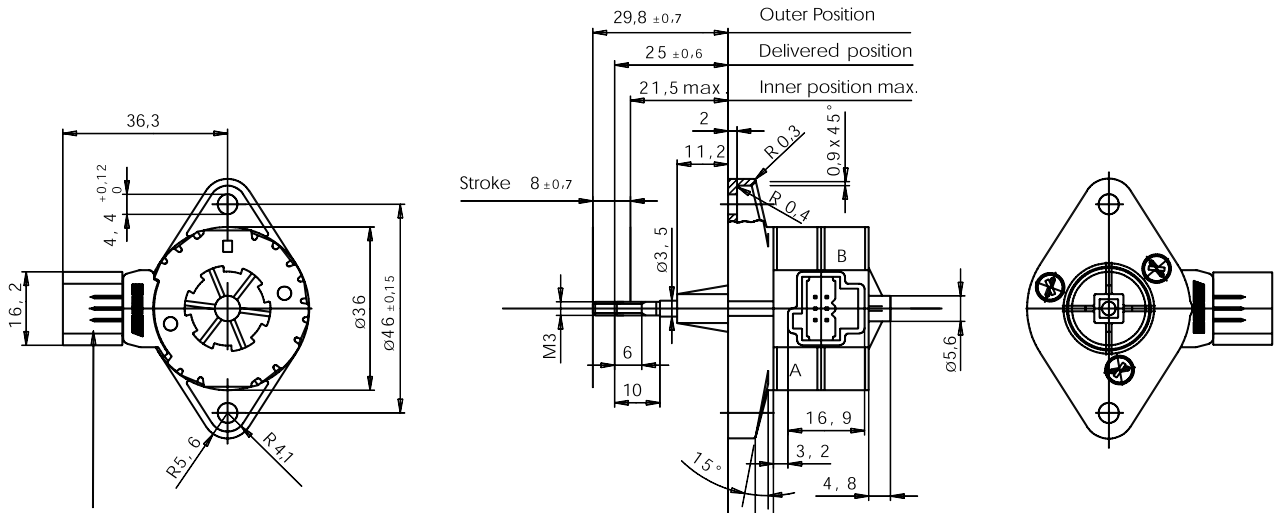

1 connector B AMP 829 836-1
2 connector C AMP 963 004-1
3 connector D for Molex C-Grid-III 90142-0006

Linear

UO Linear actuator (LA5021ST)

Dimensions (mm)	∅ 50 x 76
Travel (mm)	45–50
Travel per step (mm)	0,031/0,047/0,063
Thread pitch (mm)	1,5/1,5/1,5
Speed (mm/s) at 200 Hz	6,25/9,37/12,5
Step angle (°)	7,5/11,25/15
Max. Force (N)*	45–50

*Depends on winding, frequency and lifetime required.
Drive against end stops only permissible after clarification of operating conditions and approval by Saia-Burgess.
Radial forces on the shaft will reduce life time and performance.

Standard Data

Climatic class	wide-spread according to DIN IEC 60721-2-1
Ambient temperature operation	°C -15 ... +40
Ambient temperature storage	°C -20 ... +105
Thermal resistance at f=0 R_{therm}	K/W 20
Thermal class	A according to DIN EN 60085
Approval	standard
Mounting	any position
Electrical connection	cable
Protection	IP 40 according to DIN EN 60529
Weight	~220 g
Rotor stalling	motor can be stopped when voltage is applied, without being overheated
Bearings	ball bearing
Electric strength	According to DIN EN 60034-1/DIN EN 60335-1

Order Reference

Type	Stepper Motor	LA5021ST	7 Ω	0,031 mm	50 mm
Resistance	7 Ω				
Travel per step	0,031 mm 0,047 mm 0,063 mm				
Travel	50 mm				

Technical Data

bipolar	Rated voltage U_N:	V	4 (Chopper drive)		
	Resistance per winding R_{20}	Ω	7		
	Step angle	°	7,5	11,25	15
	Travel per step	mm	0,031	0,047	0,063
	Steps per mm		32	21	16
	Winding temperature T_{max}	°C	130		
	Duty cycle		100%		
	Linear travel max.	mm	50		
	Axial play at 20 N force	mm	<0,25		

Dimensions

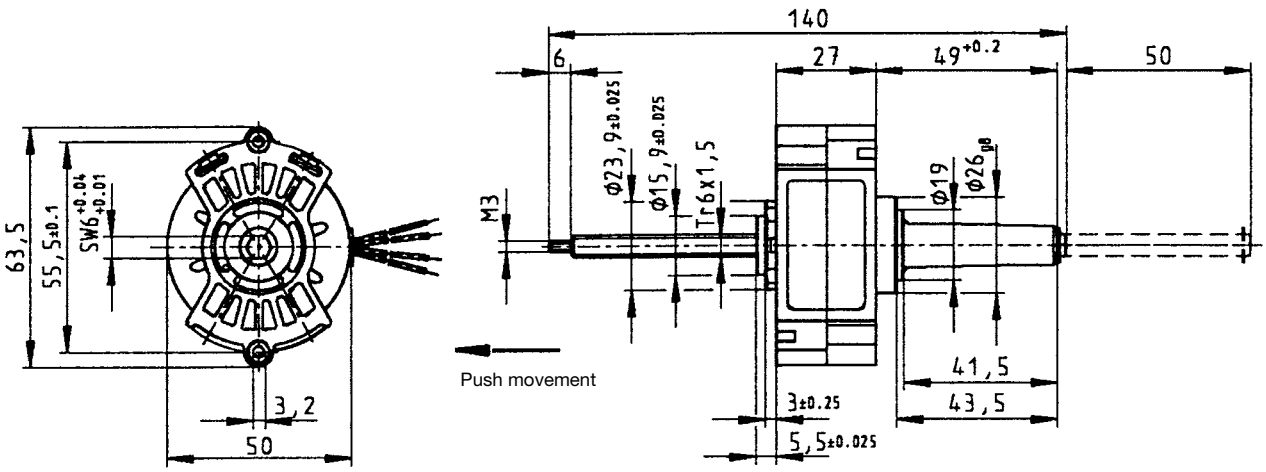

Standard - wire length: 100^{+20} mm/$6^{\pm1}$ stripped

UO Spindle actuator (SP5022ST)

Dimensions (mm)	∅ 50 x 27
Travel (mm)	68–130
Travel per step (mm)	0,031/0,047/0,063
Thread pitch (mm)	1,5/1,5/1,5
Speed (mm/s) at 200 Hz	6,25/9,37/12,5
Step angle (°)	7,5/11,25/15
Max. Force (N)*	50–70

*Depends on winding, frequency and lifetime required.
Drive against end stops only permissible after clarification of operating conditions and approval by Saia-Burgess.
Radial forces on the shaft will reduce life time and performance.

Standard Data

Climatic class	wide-spread according to DIN IEC 60721-2-1
Ambient temperature operation	°C -15 ... +40
Ambient temperature storage	°C -20 ... +105
Thermal resistance at f=0 R_{therm}	K/W 20
Thermal class	A according to DIN EN 60085
Approval	standard
Mounting	any position
Electrical connection	cable
Protection	IP 40 according to DIN EN 60529
Weight	~220 g
Rotor stalling	motor can be stopped when voltage is applied, without being overheated
Bearings	ball bearing
Electric strength	According to DIN EN 60034-1/DIN EN 60335-1

Order Reference

Type	Stepper Motor	SP5022ST	7 Ω	0,031 mm	68 mm
Resistance	7 Ω				
Travel per step	0,031 mm 0,047 mm 0,063 mm				
Travel	68 mm 130 mm				

Technical Data

bipolar	Rated voltage U_N:	V	4 (Chopper drive)		
	Resistance per winding R_{20}	Ω	7		
	Step angle	°	7,5	11,25	15
	Travel per step	mm	0,031	0,047	0,063
	Steps per mm		32	21	16
	Winding temperature T_{max}	°C	130		
	Travel	mm	~68/+130		
	Positioning accuacy (incl. axial play)	mm	± 0,15		
	Static axial force	N	max. 50		
	Self-locking by spindle/nut system		yes		
	Drive		not stall-proof		
	Anti-rotation guidance of spindle		external required		

Dimensions Version with Travel 68 mm
130 mm

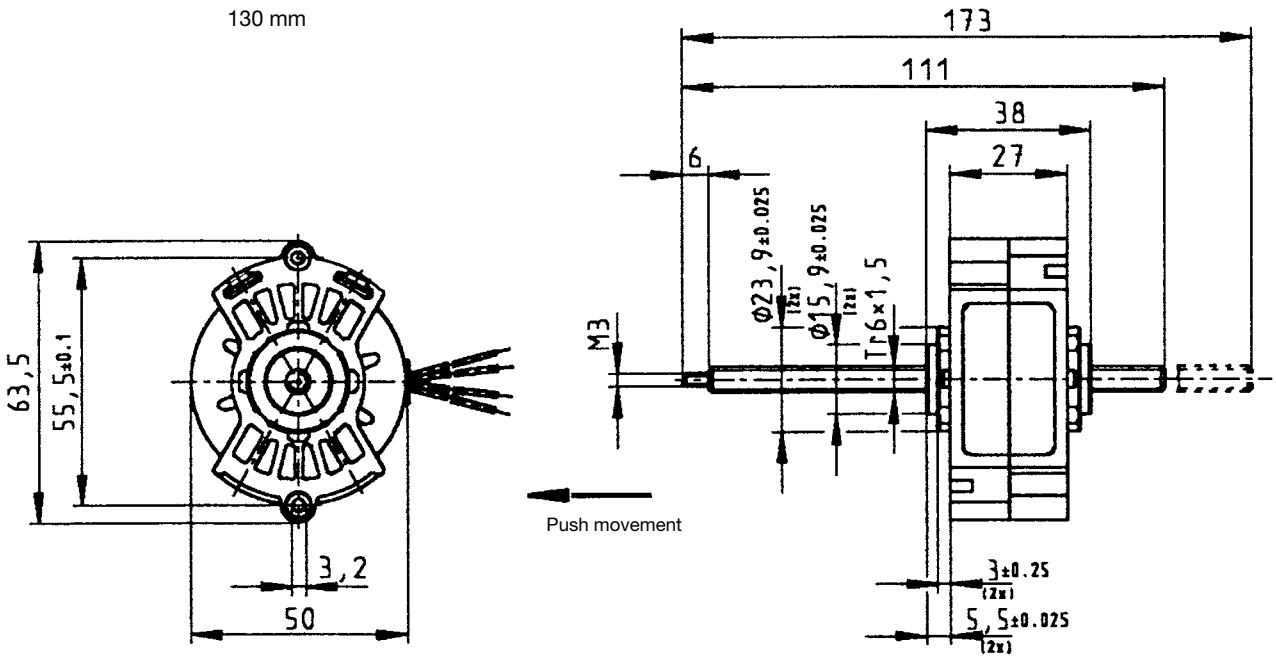

Standard - wire length: 100^{+20} mm/$6^{\pm1}$ stripped

Connection Types UC motors

Lead wire

Connection N

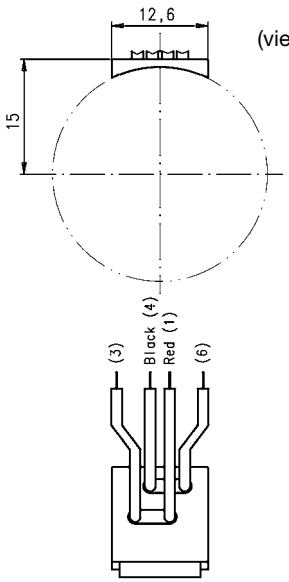

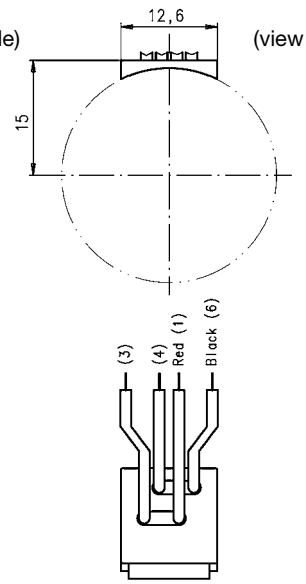

up to 48 V
for rotary motors
(bipolar, synchronous in parallel circuit)

different lead colours for 110 V (230 V)
for rotary synchronous motors in series circuit

Connector

Connector C

for Tyco Tyco Modu IV 0-1740209-6

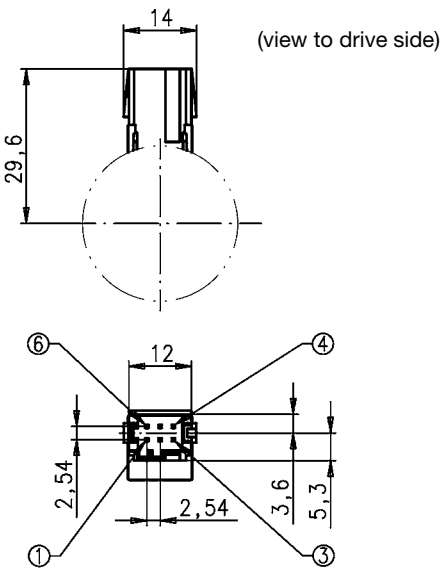

up to 48 V
for linear motors
(bipolar, unipolar, synchronous)

Connector D

for Molex C-Grid III 90142-006

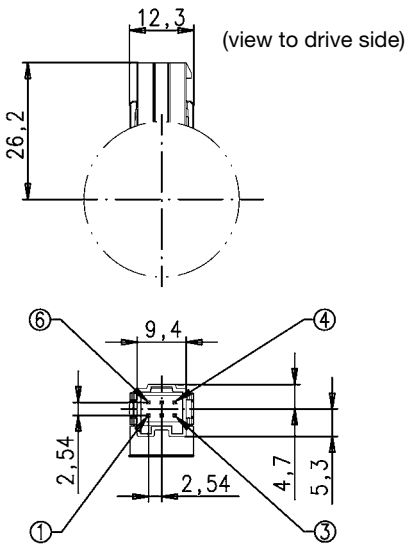

up to 48 V
for rotary and linear motors
(bipolar, unipolar, synchronous)

Electronics for Stepper Motors

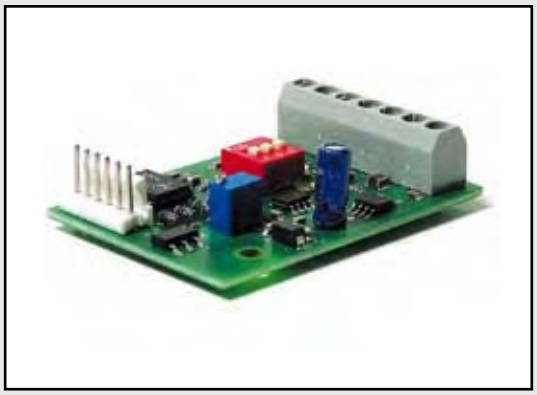

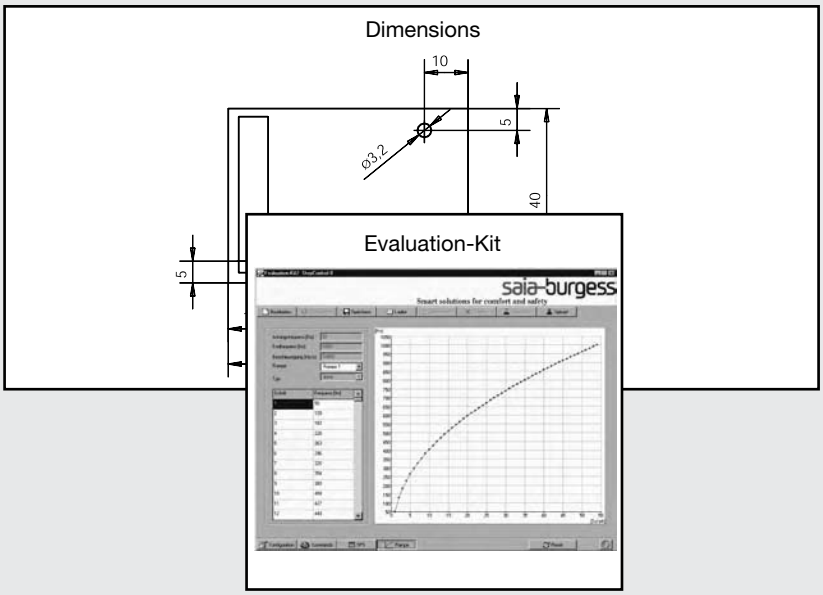

JOHNSON ELECTRIC

innovating motion

SAMOTRONIC101

Driver	for unipolar motors
Dimensions (mm)	55 x 40
Supply voltage (VDC)	10-24
Motor current	constant voltage drive
Step mode	full/half step
Clock source	internal or external
Control inputs to	▪ inhibit internal clock ▪ inhibit motor current ▪ change direction of rotations
Configuration	via DIP-switch, potentiometer

Preferred Range

Ordering Reference	
4 636 6608 0	If motors are also to be ordered please state: “with MTA-100 receptacles for use with SAMOTRONIC101“.
4 636 6608 3	with screw terminal for motor connection, max 0,5 mm²

Technical Data

Supply voltage	10-24 VDC
Phase current	≤ 350 mA
Control signal level	LS-TTL (0-5V) for all control inputs
Internal clock	50-360 Hz
External clock	up to 2 kHz
Dimensions	55 x 40 mm
Operating temperature	-5 to +50 °C
Storage temperature	-20 to +70 °C

Dimensions

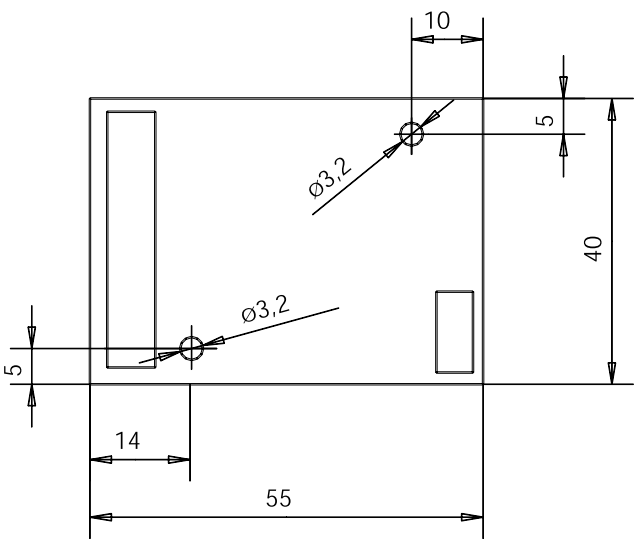

For latest technical and safety compliance information regarding these products, please download the relevant data sheet from our web site: www.saia-burgess.com/drivers

SAMOTRONIC102

Driver	for bipolar motors
Dimensions (mm)	84 x 54
Supply voltage (VDC)	▪ standard version 10 DC–24 ▪ enhanced version 10 DC–42
Motor current	▪ constant current drive (chopper controlled) ▪ adjustable via potentiometer
Step mode	full/half step
Clock source	internal or external
Control inputs to	▪ inhibit internal clock ▪ inhibit motor current ▪ change direction of rotations
Configuration	via DIP-switch, potentiometer
Test pins	▪ motor current ▪ step frequency

Preferred Range

Ordering Reference	
4 636 6733 0	10-24VDC supply voltage (standard version)
4 636 6733 3	10-42VDC supply voltage (enhanced version)

If motors are also to be ordered please state: “with MTA-100 receptacles for use with SAMOTRONIC102”.

Technical Data

Supply voltage	10-24 (42)VDC
Phase current	71-500 mA, on request max. 735mA/ph
Chopper frequency	typ. 20kHz
Control signal level	LS-TTL (0-5V) for all control inputs
Internal clock	50-1325 Hz
External clock	up to 2 kHz
Dimensions	84 x 54 mm
Operating temperature	-20 to +60 °C
Storage temperature	-20 to +80 °C

Dimensions

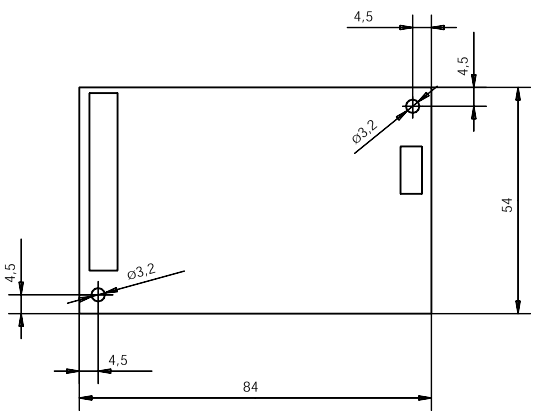

For latest technical and safety compliance information regarding these products, please download the relevant data sheet from our web site:
www.saia-burgess.com/drivers

Evaluation-Kit 2

Evaluation-Kit 2

Driver	for unipolar and bipolar motors
Dimensions (mm)	metal case 164 x 130 x 45
Supply voltage (VDC) (VAC)	 3–48 24
Motor current	constant voltage drive and constant current drive (chopper controlled)
Step mode	full/half/micro step
Clock source	internal, programmable
Control inputs to	▪ 3 digital inputs ▪ 4 signal outputs ▪ 1 analog input 0...10 VDC ▪ relay contact
Configuration	RS 232, USB

Order Reference

4 717 4898 0

Power supply (on request)

Technical Data

Supply voltage	10-48 VDC/24 VAC
Phase current	≤ up to 2,3 A
Step modes	11 (full, half, wave ... microstep)
Max. step frequency	10 kHz
PLC	max. 256 steps, 65536 loops
Operating temperature	0 ... +55 °C
Storage temperature	-20 to +80 °C

Test the Stepconfreeware without hardware in a special demo mode (www.saia-burgess.com/evaluationkit2).

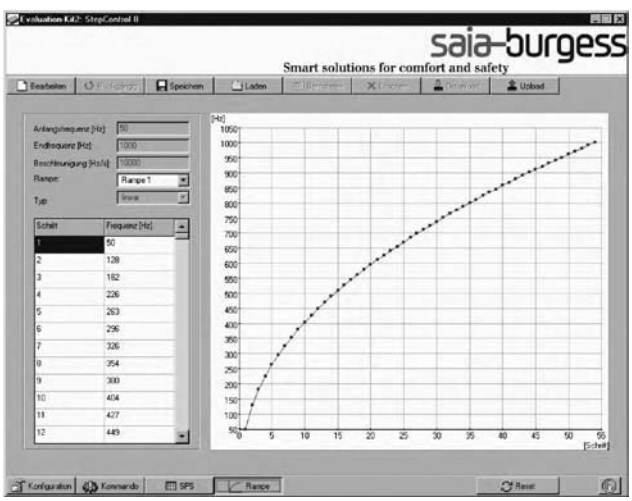

For further information please contact your Saia-Burgess sales company or see our website www.saia-burgess.com.

Druver Board

Cam Programers

Dimensions

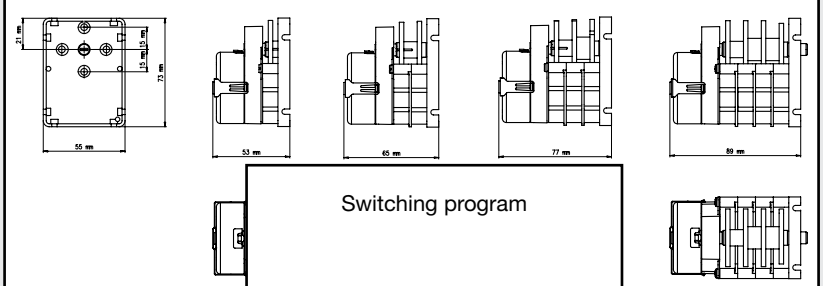

Switching program

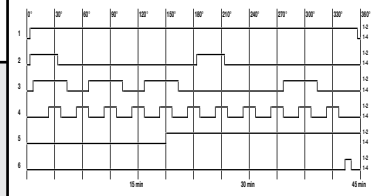

JOHNSON ELECTRIC

innovating motion

KKP

Synchronous programmer, 1 to 4 channels

Market
Healthcare & Medical Equipment, Personal Care, Building Automation & Security, White Goods, Home Appliances, Heating Ventilation & Air Conditioning, Industrial equipment & automation, Business Machines

Application
hand dryers, hair dryers, saunas, swiming pool, fountain variables, fog horn, bell towers, defrosing, Ice cube machine, coffee machine, heating ventilation, sanibroyeurs, automation, galvano, test equipment, food specialities, botteling, newspaper, milk truck cleanning, milking equipment, drying, bookbinding, Vending machines, feeding systems

Characteristics

	standard	optional	on request
Program	milled cams, according customers diagram	with adjusable segment «S» cams or jumper «R» cams	
Nbre channels	1,2, 3 or 4 program channels		
Prog. duration	from 1 sec to 120 h		
Driving	unidirectional synchronous motor		
Voltage	230 V, 50 Hz or 110 V, 60 Hz .		other voltages on request
Switching power	12 (6) A; UL 10 A		other switching power on request
Approvals	standard EC	UL approval	

Order Reference

Type	Cam Programmer											KKP 00	3	01	B3	E1	N	00
Number of channels	**1, 2, 3** or **4** channels																	
Type of cams diagrams	**01** with S cams **02** with R cams **03** to **99** customer specific diagram number																	
Programm duration	**B1** 1 s	**B2** 10 s	**D3** 1.25 min	**R3** 6 min	**K4** 36 min													
	E1 1.5 s	**C2** 12 s	**E3** 1.5 min	**S3** 7.5 min	**B5** 1 h													
	J1 3 s	**E2** 15 s	**F3** 2 min	**B4** 10 min	**E5** 1.5 h	**S5** 7.5 h												
	M1 4 s	**F2** 20 s	**J3** 3 min	**E4** 15 min	**F5** 2 h	**B6** 10 h												
	Q1 5 s	**J2** 30 s	**M3** 4 min	**W4** 18 min	**J5** 3 h	**C6** 12 h												
	R1 6 s	**B3** 1 min	**Q3** 5 min	**J4** 30 min	**R5** 6 h	**G6** 24 h												
Supply voltage	**B4** 24 V 50 Hz	**E1** 230 V 50 Hz	**J1** 110 V 60 Hz															
Approval	**N** standard EC	**U** with UL-CSA approval																
Execution	**00** standard **01** to **99** specific customer execution																	
On request	other program duration	other voltage	other switching power															
Accessories	fixing bridle (for 3-point fixing)	**4 109 4815 0**																

KKP

Circuit diagram

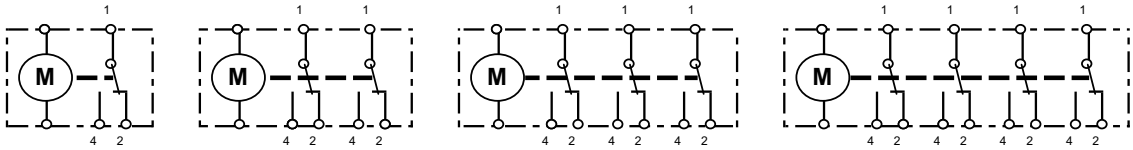

Dimensions

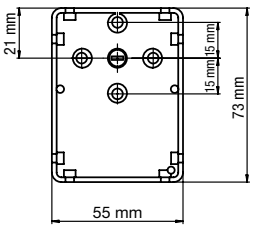

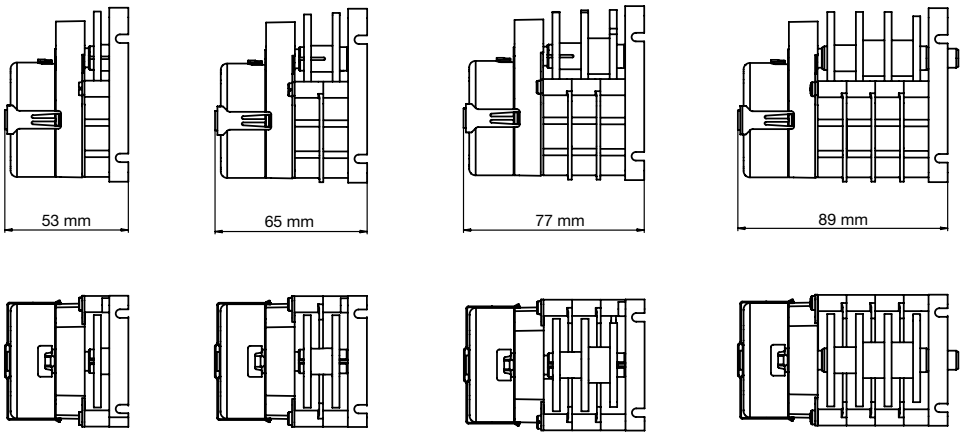

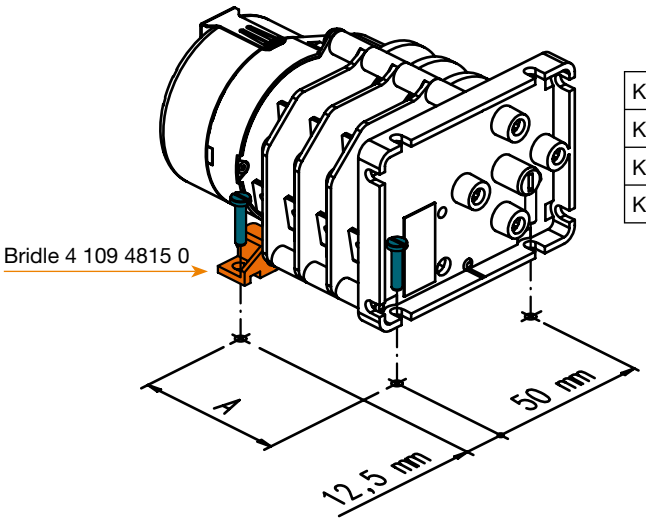

	A
KKP001	10 mm
KKP002	22 mm
KKP003	34 mm
KKP004	46 mm

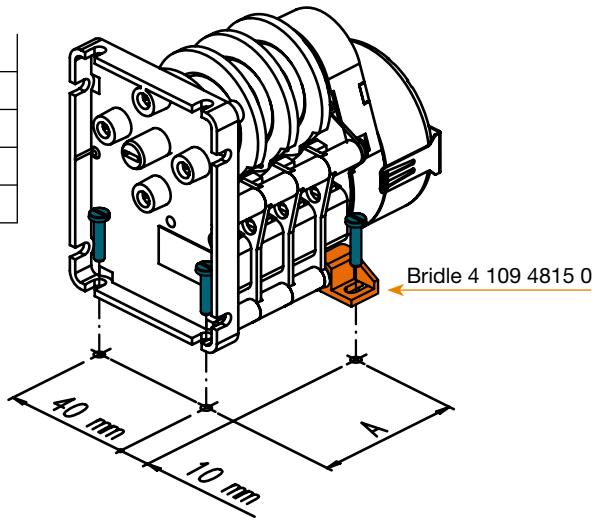

KKC

Synchronous programmer, 1 or 2 channels

Market
Healthcare & Medical Equipment, Personal Care, Building Automation & Security, White Goods, Home Appliances, Heating Ventilation & Air Conditioning, Industrial equipment & automation, Business Machines

Application
saunas, swiming pool, fountain variables, fog horn, bell towers, defrosing, heating ventilation, automation, galvano, test equipment, food specialities, botteling, newspaper, milk truck cleanning, milking equipment, drying, bookbinding, Vending machines, feeding systems

Characteristics

	standard	optional	on request
Program	milled cams, according customers diagram	with adjusable segment «S» cams or jumper «R» cams	
Nbre channels	1 or 2 program channels		
Prog. duration	from 10 sec to 120 h		
Driving	unidirectional synchronous motor		
Voltage	230 V, 50 Hz or 110 V, 60 Hz		other voltages on request
Switching power	12 (6) A; UL 10 A		other switching power on request
Approvals	standard EC		

Order Reference

Type	Cam Programmer									KKC 00	2	01	B2	E1	N	00
Number of channels	**1** or **2** channels															
Type of cams diagrams	**01**	with S cams														
	02	with R cams														
	03 to **99**	customer specific diagram number														
Programm duration	**B1**	1 s	**B2**	10 s	**D3**	1.25 min	**R3**	6 min	**K4**	36 min						
	E1	1.5 s	**C2**	12 s	**E3**	1.5 min	**S3**	7.5 min	**B5**	1 h						
	J1	3 s	**E2**	15 s	**F3**	2 min	**B4**	10 min	**E5**	1.5 h	**S5**	7.5 h				
	M1	4 s	**F2**	20 s	**J3**	3 min	**E4**	15 min	**F5**	2 h	**B6**	10 h				
	Q1	5 s	**J2**	30 s	**M3**	4 min	**W4**	18 min	**J5**	3 h	**C6**	12 h				
	R1	6 s	**B3**	1 min	**Q3**	5 min	**J4**	30 min	**R5**	6 h	**G6**	24 h				
Supply voltage	**B4**	24 V 50 Hz	**E1**	230 V 50 Hz	**J1**	110 V 60 Hz										
Approval	**N**	standard EC														
Execution	**00**	standard														
	01 to **99**	specific customer execution														
On request	other program duration				other voltage				other switching power							
Accessories																

Cam Programmers

Circuit diagram

KKC001..

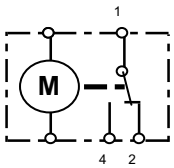

KKC002..

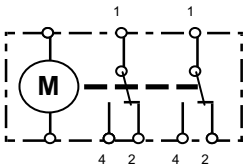

Dimensions

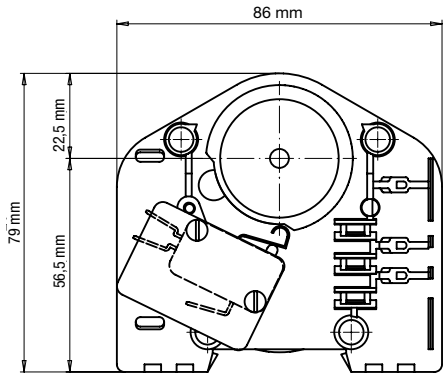

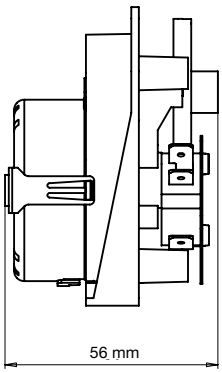

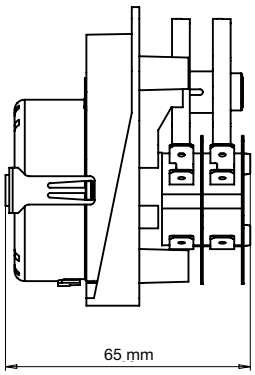

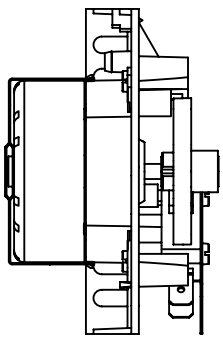

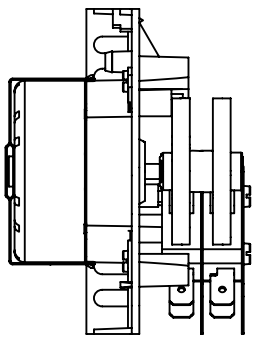

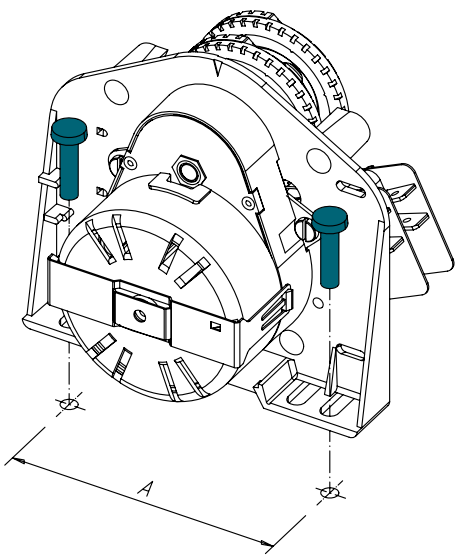

KKD0

Synchronous programmers

Unlimited choice of program durations, with adjustable or defined programs.

Market

Healthcare & Medical Equipment, Personal Care, Building Automation & Security, White Goods, Home Appliances, Heating Ventilation & Air Conditioning, Industrial equipment & automation, Business Machines

Application

toilet cabins, swiming pool, fountain variables, fog horn, bell towers, defrosing, heating ventilation, sanibroyeurs, automation, galvano, test equipment, food specialities, botteling, newspaper, milk truck cleanning, carwash, milking equipment, bookbinding, Vending machines, feeding systems

Characteristics

	standard	optional	on request
Program	milled cams, according customers diagram	with adjusable segment «S» cams or jumper «R» cams	
Nbre channels	max. 30 Typ 4, 6, 8, 12, 20 program channels		
Prog. duration	from 10 sec to 120 h		
Driving	unidirectional synchronous motor		
Voltage	230 V, 50 Hz or 110 V, 60 Hz		other voltages on request
Switching power	12 (6) A; UL 10 A		other switching power on request
Approvals	standard EC	UL approval	

Order Reference

Type	Cam Programmer with unirotational synchronious motor												KKD0	2	A	01	J4	E1	N	00
Setting knob	**0** without knob **2** with external knob																			
Number of channels	1	2	3	4	5	6	7	8	9	10	11	12								
	1	**2**	**3**	**4**	**5**	**6**	**7**	**8**	**9**	**A**	**B**	**C**								
	13	14	15	16	18	20	22	24	25	26	28	30								
	D	**E**	**F**	**G**	**J**	**M**	**P**	**R**	**S**	**T**	**V**	**W**								
Type of cams diagrams	**01** with S cams **02** with R cams **03** to **99** customer specific diagram number																			
Programm duration	**B1** 1 s	**B2** 10 s	**D3** 1.25 min	**R3** 6 min	**K4** 36 min															
	E1 1.5 s	**C2** 12 s	**E3** 1.5 min	**S3** 7.5 min	**B5** 1 h															
	J1 3 s	**E2** 15 s	**F3** 2 min	**B4** 10 min	**E5** 1.5 h	**S5** 7.5 h														
	M1 4 s	**F2** 20 s	**J3** 3 min	**E4** 15 min	**F5** 2 h	**B6** 10 h														
	Q1 5 s	**J2** 30 s	**M3** 4 min	**W4** 18 min	**J5** 3 h	**C6** 12 h														
	R1 6 s	**B3** 1 min	**Q3** 5 min	**J4** 30 min	**R5** 6 h	**G6** 24 h														
Supply voltage	**B4** 24 V 50 Hz	**E1** 230 V 50 Hz	**J1** 110 V 60 Hz																	
Approval	**N** standard EC	**U** with UL-CSA approval																		
Execution	**00** standard **01** to **99** specific customer execution																			

On request: other program duration; other voltage; motor cw instead of ccw; higher electrical rating of microswitches

Accessories:
additional 6° snap-on riders for R-cams **4 264 4802 0**
additional 12° snap-on riders for R-cams **4 264 4801 0**

KKD0

Circuit diagram

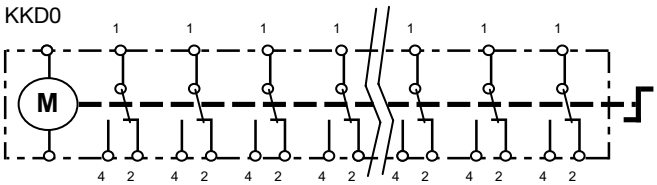

Dimensions

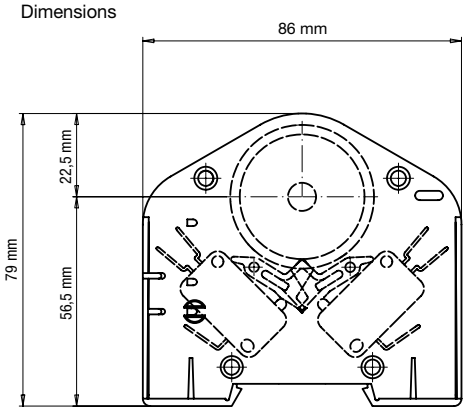

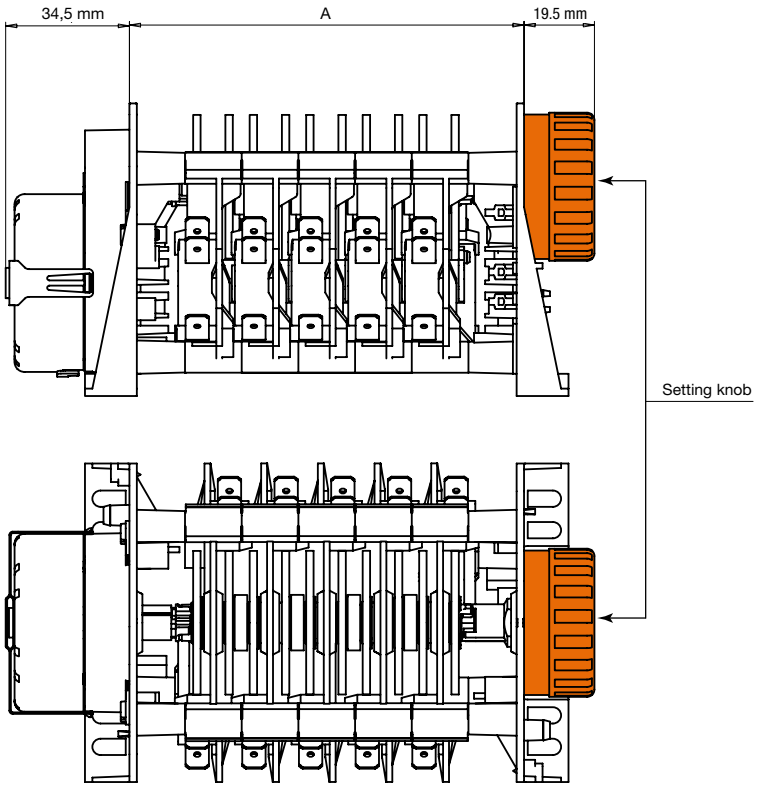

Number of program channels	Dimensions (mm)	
	A	B
1–2	45.3	57.3
3–4	60.6	72.6
5–6	76	88
7–8	91	103
9–10	106.5	118.5
11–12	122	134
13–14	137	149
15–16	152	164
17–18	168	180
19–20	183	195
21–22	198	210
23–24	214	226
25–26	229	241
27–28	244	256
29–30	260	272

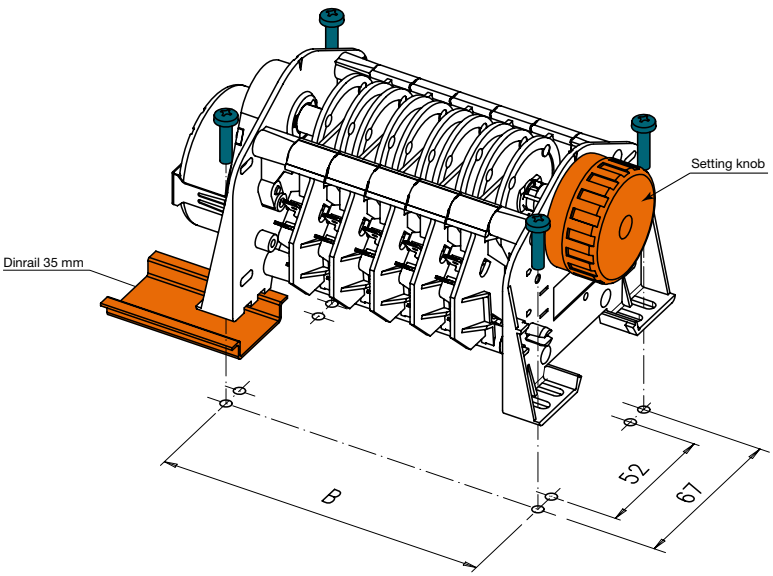

KKD02-01

Synchronous cam programmer, with adjustable segment cams

With key and setting knob.

Market

Healthcare & Medical Equipment, Personal Care, Building Automation & Security, White Goods, Home Appliances, Heating Ventilation & Air Conditioning, Industrial equipment & automation, Business Machines

Application

toilet cabins, swiming pool, fountain variables, fog horn, bell towers, defrosing, heating ventilation, automation, galvano, test equipment, food specialities, botteling, newspaper, milk truck cleanning, carwash, milking equipment, bookbinding, Vending machines, feeding systems

Characteristics

	standard	optional	on request
Program	segment cams adjustable by customer		
Nbre channels	max. 30 Typ 4, 6, 8, 12, 20 program channels		
Prog. duration	from 10 sec to 120 h		
Driving	unidirectional synchronous motor		
Voltage	230 V, 50 Hz or 110 V, 60 Hz		other voltages on request
Switching power	12 (6) A; UL 10 A		other switching power on request
Approvals	standard EC	UL approval	

Order Reference

Type: Cam Programmer with unirotational synchronious motor with S (segment) cams and external knob — KKD02 | C | 01 | J4 | E1 | N | 00

Number of channels:

1	2	3	4	5	6	7	8	9	10	11	12
1	**2**	**3**	**4**	**5**	**6**	**7**	**8**	**9**	**A**	**B**	**C**

13	14	15	16	18	20	22	24	25	26	28	30
D	**E**	**F**	**G**	**J**	**M**	**P**	**R**	**S**	**T**	**V**	**W**

Programm duration:

B1	1 s	**B2**	10 s	**D3**	1.25 min	**R3**	6 min	**K4**	36 min		
E1	1.5 s	**C2**	12 s	**E3**	1.5 min	**S3**	7.5 min	**B5**	1 h		
J1	3 s	**E2**	15 s	**F3**	2 min	**B4**	10 min	**E5**	1.5 h	**S5**	7.5 h
M1	4 s	**F2**	20 s	**J3**	3 min	**E4**	15 min	**F5**	2 h	**B6**	10 h
Q1	5 s	**J2**	30 s	**M3**	4 min	**W4**	18 min	**J5**	3 h	**C6**	12 h
R1	6 s	**B3**	1 min	**Q3**	5 min	**J4**	30 min	**R5**	6 h	**G6**	24 h

Supply voltage: **B4** 24 V 50 Hz; **E1** 230 V 50 Hz; **J1** 110 V 60 Hz

Approval: **N** standard EC; **U** with UL-CSA approval

Execution: **00** standard; **01** to **99** specific customer execution

On request: other program duration; other voltage; motor cw instead of ccw; higher electrical rating of microswitches

Accessories

Circuit diagram and dimensions: see page 191

KK02-02

Synchronous cam programmer, with adjustable cam riders

With key and setting knob.

Market

Healthcare & Medical Equipment, Personal Care, Building Automation & Security, White Goods, Home Appliances, Heating Ventilation & Air Conditioning, Industrial equipment & automation, Business Machines

Application

toilet cabins, swiming pool, fountain variables, fog horn, bell towers, defrosing, heating ventilation, automation, galvano, test equipment, food specialities, botteling, newspaper, milk truck cleanning, carwash, milking equipment, bookbinding, Vending machines, feeding systems

Characteristics

	standard	optional	on request
Program	*snap-on rider cams adjustable by customer		
Nbre channels	max. 30 Typ 4, 6, 8, 12, 20 program channels		
Prog. duration	from 10 sec to 120 h		
Driving	unidirectional synchronous motor		
Voltage	230 V, 50 Hz or 110 V, 60 Hz		other voltages on request
Switching power	12 (6) A; UL 10 A		other switching power on request
Approvals	standard EC	UL approval	

Order Reference

Type	Cam Programmer with unirotational synchronious motor with S (segment) cams and external knob												KKD02	8	02	F3	E1	N	00
Number of channels	1	2	3	4	5	6	7	8	9	10	11	12							
	1	**2**	**3**	**4**	**5**	**6**	**7**	**8**	**9**	**A**	**B**	**C**							
	13	14	15	16	18	20	22	24	25	26	28	30							
	D	**E**	**F**	**G**	**J**	**M**	**P**	**R**	**S**	**T**	**V**	**W**							

Programm duration												
	B1	1 s	**B2**	10 s	**D3**	1.25 min	**R3**	6 min	**K4**	36 min		
	E1	1.5 s	**C2**	12 s	**E3**	1.5 min	**S3**	7.5 min	**B5**	1 h		
	J1	3 s	**E2**	15 s	**F3**	2 min	**B4**	10 min	**E5**	1.5 h	**S5**	7.5 h
	M1	4 s	**F2**	20 s	**J3**	3 min	**E4**	15 min	**F5**	2 h	**B6**	10 h
	Q1	5 s	**J2**	30 s	**M3**	4 min	**W4**	18 min	**J5**	3 h	**C6**	12 h
	R1	6 s	**B3**	1 min	**Q3**	5 min	**J4**	30 min	**R5**	6 h	**G6**	24 h

Supply voltage	**B4**	24 V 50 Hz	**E1**	230 V 50 Hz	**J1**	110 V 60 Hz
Approval	**N**	standard EC	**U**	with UL-CSA approval		
Execution	**00**	standard				
	01 to **99**	specific customer execution				

On request: other program duration | other voltage | motor cw instead of ccw | higher electrical rating of microswitches

Accessories:
additional 6° snap-on riders for R-cams **4 264 4802 0**
additional 12° snap-on riders for R-cams **4 264 4801 0**

Circuit diagram and dimensions: see page 191

KKD1

Synchronous cam programmer, with 2-speed rotation.

The fast motor allows a very accuracy sequence inserted within a long process.

Market

Healthcare & Medical Equipment, Personal Care, Building Automation & Security, White Goods, Home Appliances, Heating Ventilation & Air Conditioning, Industrial equipment & automation, Business Machines

Application

swiming pool, fountain variables, fog horn, bell towers, defrosing, heating ventilation, automation, galvano, test equipment, food specialities, botteling, newspaper, milk truck cleanning, carwash, milking equipment, bookbinding, Vending machines, feeding systems

Characteristics

	standard	optional	on request
Program	two motors two speed	with adjusable segment «S» cams or jumper «R» cams	
Nbre channels	max. 30		
Prog. duration	from 10 sec to 120 h		
Driving	2 unidirectional synchronous motors		
Voltage	230 V, 50 Hz or 110 V, 60 Hz		other voltages on request
Switching power	12 (6) A; UL 10 A		other switching power on request
Approvals	standard EC	UL approval	

Order Reference

Type	Cam Programmer with unirotational synchronious motor										KKD1	1	C	01	B5	E1	N	B2
Setting knob	**0** without knob **1** with internal knob																	
Number of channels	1	2	3	4	5	6	7	8	9	10	11	12						
	1	**2**	**3**	**4**	**5**	**6**	**7**	**8**	**9**	**A**	**B**	**C**						
	13	14	15	16	18	20	22	24	25	26	28	30						
	D	**E**	**F**	**G**	**J**	**M**	**P**	**R**	**S**	**T**	**V**	**W**						
Type of cams diagrams	**01** with S cams **02** with R cams **03** to **99** customer specific diagram number																	
Programm duration	**B1** 1 s	**B2** 10 s	**D3** 1.25 min	**R3** 6 min	**K4** 36 min													
	E1 1.5 s	**C2** 12 s	**E3** 1.5 min	**S3** 7.5 min	**B5** 1 h													
	J1 3 s	**E2** 15 s	**F3** 2 min	**B4** 10 min	**E5** 1.5 h	**S5** 7.5 h												
	M1 4 s	**F2** 20 s	**J3** 3 min	**E4** 15 min	**F5** 2 h	**B6** 10 h												
	Q1 5 s	**J2** 30 s	**M3** 4 min	**W4** 18 min	**J5** 3 h	**C6** 12 h												
	R1 6 s	**B3** 1 min	**Q3** 5 min	**J4** 30 min	**R5** 6 h	**G6** 24 h												
Supply voltage	**B4** 24 V 50 Hz	**E1** 230 V 50 Hz	**J1** 110 V 60 Hz															
Approval	**N** standard EC	**U** with UL-CSA approval																
Second motor or execution	**B1** to **G6** (see motor program duration) **01** to **99** specific customer execution																	
On request	other voltage	higher electrical rating of microswitches																
Accessories	additional 6° snap-on riders for R-cams **4 264 4802 0** additional 12° snap-on riders for R-cams **4 264 4801 0**																	

Cam Programmers

KKD1

Circuit diagram

KKD1

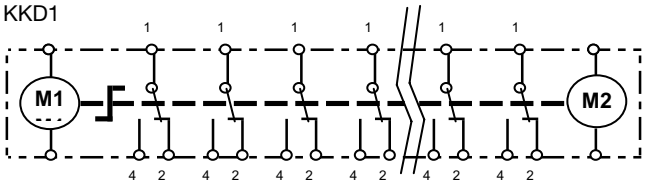

Dimensions

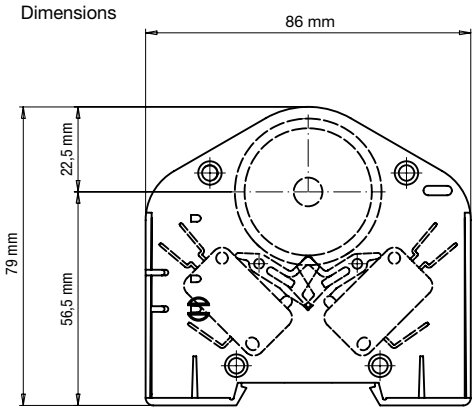

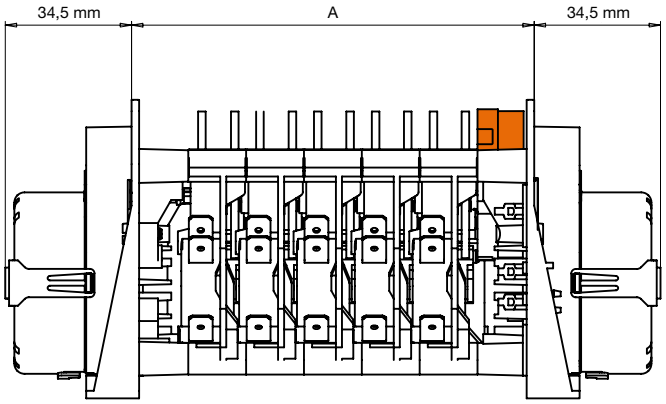

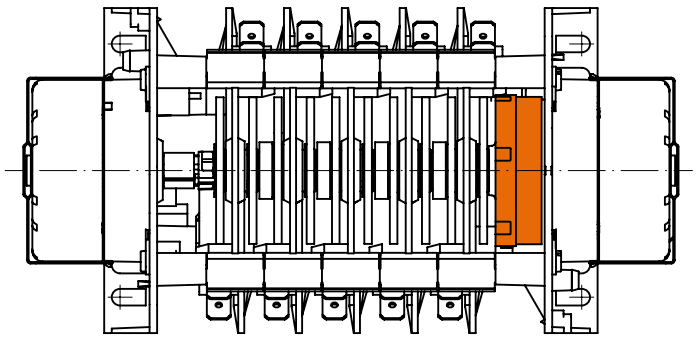

Number of program channels	Dimensions (mm)	
	A	B
1–2	45.3	57.3
3–4	60.6	72.6
5–6	76	88
7–8	91	103
9–10	106.5	118.5
11–12	122	134
13–14	137	149
15–16	152	164
17–18	168	180
19–20	183	195
21–22	198	210
23–24	214	226
25–26	229	241
27–28	244	256
29–30	260	272

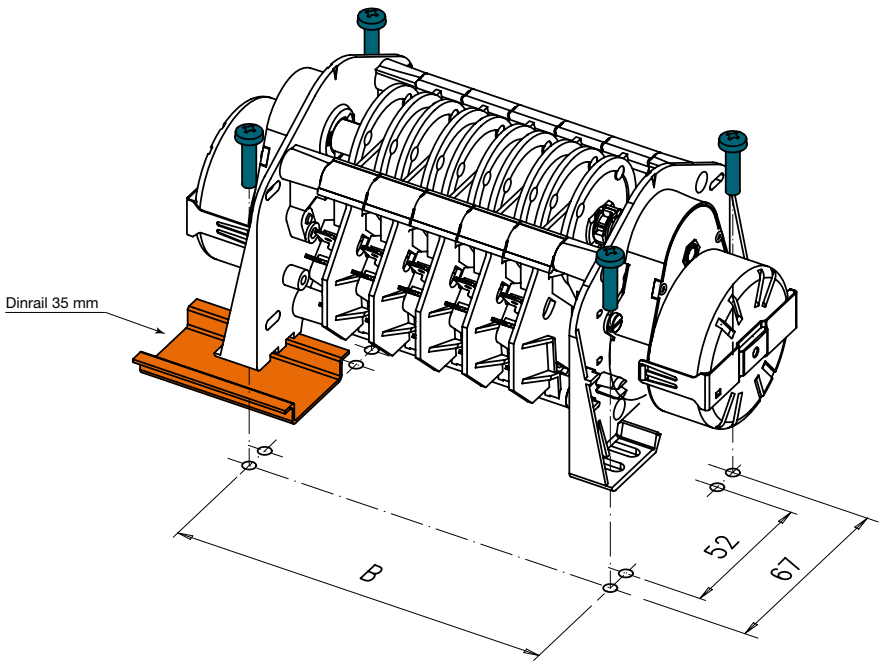

KKD7

Cam programmer comprising 2 independent, synchronous programs.

Allows a precise sub-program to be called several times in the course of the program.

Market

Healthcare & Medical Equipment, Personal Care, Building Automation & Security, White Goods, Home Appliances, Heating Ventilation & Air Conditioning, Industrial equipment & automation, Business Machines

Application

swiming pool, fountain variables, fog horn, bell towers, defrosing, heating ventilation, automation, galvano, test equipment, food specialities, botteling, newspaper, milk truck cleanning, carwash, milking equipment, bookbinding, Vending machines, feeding systems

Characteristics

	standard	optional	on request
Program	two independant programs, driven by two motors	with adjusable segment «S» cams or jumper «R» cams	
Nbre channels	max. 30		
Prog. duration	from 10 sec to 120 h		
Driving	2 unidirectional synchronous motors		
Voltage	230 V, 50 Hz or 110 V, 60 Hz		other voltages on request
Switching power	12 (6) A; UL 10 A		other switching power on request
Approvals	standard EC	UL approval	

Order Reference

Type	Cam Programmer with unirotational synchronious motor												KKD7	1	C	01	B5	E1	N	B2
Setting knob	**0** without knob **1** with 2 internal knob																			
Number of channels	1	2	3	4	5	6	7	8	9	10	11	12								
	1	**2**	**3**	**4**	**5**	**6**	**7**	**8**	**9**	**A**	**B**	**C**								
	13	14	15	16	18	20	22	24	25	26	28	30								
	D	**E**	**F**	**G**	**J**	**M**	**P**	**R**	**S**	**T**	**V**	**W**								
Type of cams diagrams	**01** with S cams **02** with R cams **03** to **99** customer specific diagram number																			
Programm duration	**B1** 1 s	**B2** 10 s	**D3** 1.25 min	**R3** 6 min	**K4** 36 min															
	E1 1.5 s	**C2** 12 s	**E3** 1.5 min	**S3** 7.5 min	**B5** 1 h															
	J1 3 s	**E2** 15 s	**F3** 2 min	**B4** 10 min	**E5** 1.5 h	**S5** 7.5 h														
	M1 4 s	**F2** 20 s	**J3** 3 min	**E4** 15 min	**F5** 2 h	**B6** 10 h														
	Q1 5 s	**J2** 30 s	**M3** 4 min	**W4** 18 min	**J5** 3 h	**C6** 12 h														
	R1 6 s	**B3** 1 min	**Q3** 5 min	**J4** 30 min	**R5** 6 h	**G6** 24 h														
Supply voltage	**B4** 24 V 50 Hz	**E1** 230 V 50 Hz	**J1** 110 V 60 Hz																	
Approval	**N** standard EC	**U** with UL-CSA approval																		
Second motor or execution	**B1** to **G6** (see motor program duration) **01** to **99** specific customer execution																			

On request	other voltage	higher electrical rating of microswitches
Accessories	additional 6° snap-on riders for R-cams	**4 264 4802 0**
	additional 12° snap-on riders for R-cams	**4 264 4801 0**

KKD7

Circuit diagram

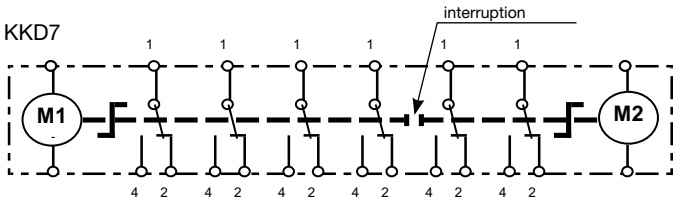

Dimensions

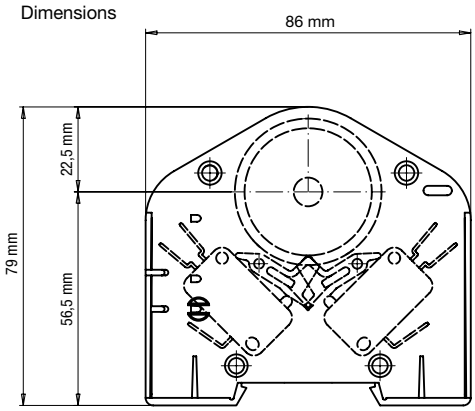

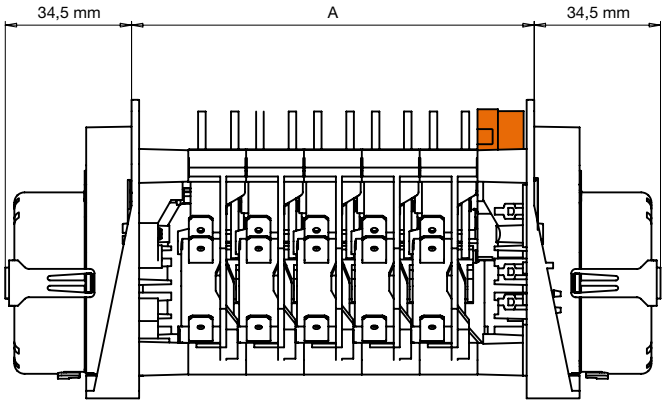

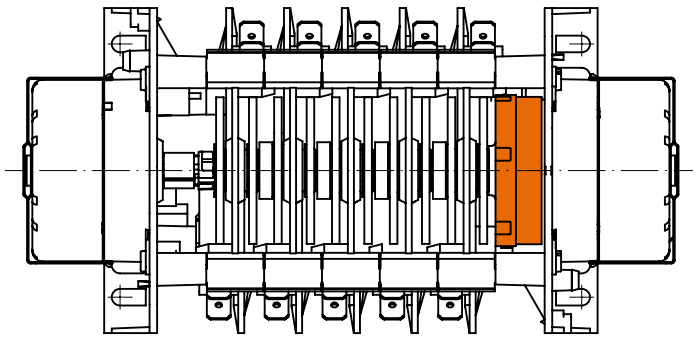

Number of program channels	Dimensions (mm)	
	A	B
1–2	45.3	57.3
3–4	60.6	72.6
5–6	76	88
7–8	91	103
9–10	106.5	118.5
11–12	122	134
13–14	137	149
15–16	152	164
17–18	168	180
19–20	183	195
21–22	198	210
23–24	214	226
25–26	229	241
27–28	244	256
29–30	260	272

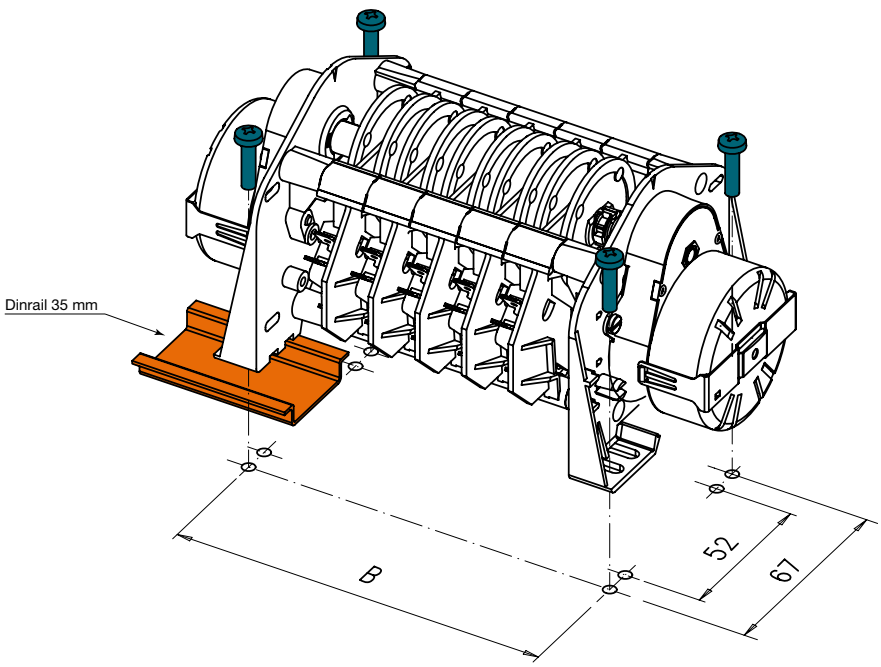

KKD2

Bidirectional, synchronous programmer.

Allows the flow of a program to be inverted. For turning the program off in reverse order.

Market

Healthcare & Medical Equipment, Personal Care, Building Automation & Security, White Goods, Home Appliances, Heating Ventilation & Air Conditioning, Industrial equipment & automation, Business Machines

Application

swiming pool, fountain variables, fog horn, bell towers, heating ventilation, automation, galvano, test equipment, food specialities, botteling, newspaper, Vending machines, feeding systems

Characteristics

	standard	optional	on request
Program	bidirectional	with adjusable segment «S» cams or jumper «R» cams	
Nbre channels	max. 30		
Prog. duration	from 10 sec to 120 h		
Driving	bidirectional synchronous motor		
Voltage	230 V, 50 Hz or 110 V, 60 Hz		other voltages on request
Switching power	12 (6) A; UL 10 A		other switching power on request
Approvals	standard EC	UL approval	

Order Reference

Type	Cam Programmer with birotational synchronious motor												KKD2	2	M	01	E4	E1	N	00
Setting knob	**0** without knob **2** with external knob																			
Number of channels	1	2	3	4	5	6	7	8	9	10	11	12								
	1	**2**	**3**	**4**	**5**	**6**	**7**	**8**	**9**	**A**	**B**	**C**								
	13	14	15	16	18	20	22	24	25	26	28	30								
	D	**E**	**F**	**G**	**J**	**M**	**P**	**R**	**S**	**T**	**V**	**W**								
Type of cams diagrams	**01** with S cams **02** with R cams **03** to **99** customer specific diagram number																			
Programm duration	**B1** 1 s		**B2** 10 s		**D3** 1.25 min		**R3** 6 min		**K4** 36 min											
	E1 1.5 s		**C2** 12 s		**E3** 1.5 min		**S3** 7.5 min		**B5** 1 h											
	J1 3 s		**E2** 15 s		**F3** 2 min		**B4** 10 min		**E5** 1.5 h		**S5** 7.5 h									
	M1 4 s		**F2** 20 s		**J3** 3 min		**E4** 15 min		**F5** 2 h		**B6** 10 h									
	Q1 5 s		**J2** 30 s		**M3** 4 min		**W4** 18 min		**J5** 3 h		**C6** 12 h									
	R1 6 s		**B3** 1 min		**Q3** 5 min		**J4** 30 min		**R5** 6 h		**G6** 24 h									
Supply voltage	**B4** 24 V 50 Hz		**E1** 230 V 50 Hz		**J1** 110 V 60 Hz															
Approval	**N** standard EC		**U** with UL-CSA approval																	
Execution	**00** standard **01** to **99** specific customer execution																			

On request: other program duration; other voltage; higher electrical rating of microswitches

Accessories:
additional 6° snap-on riders for R-cams **4 264 4802 0**
additional 12° snap-on riders for R-cams **4 264 4801 0**

KKD2

Circuit diagram

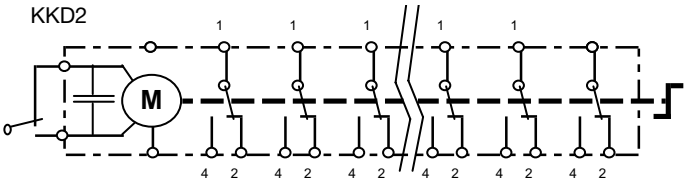

Dimensions

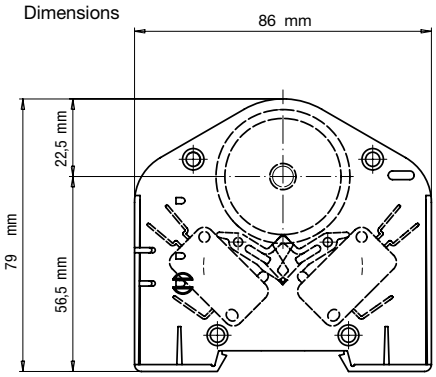

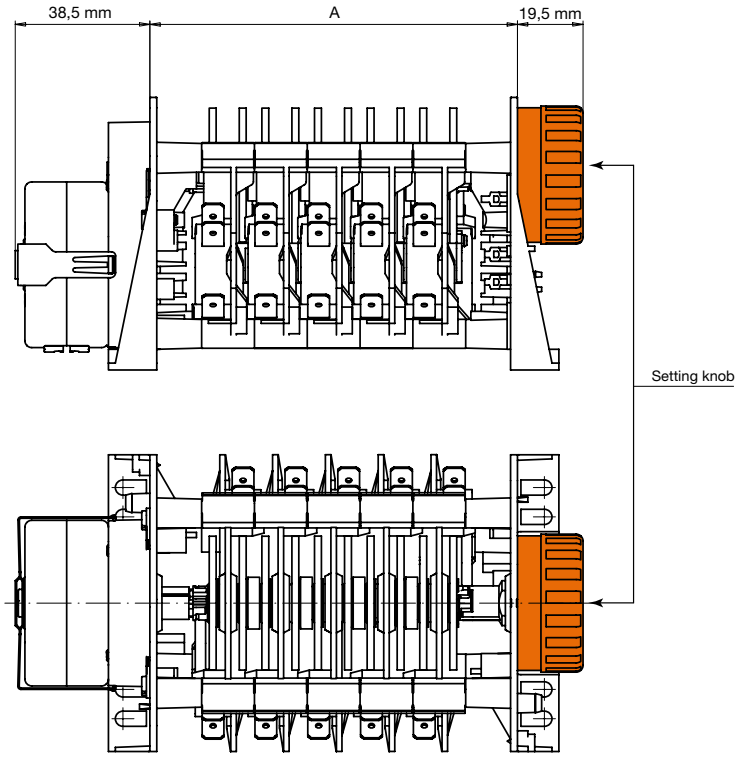

Number of program channels	Dimensions (mm)	
	A	B
1–2	45.3	57.3
3–4	60.6	72.6
5–6	76	88
7–8	91	103
9–10	106.5	118.5
11–12	122	134
13–14	137	149
15–16	152	164
17–18	168	180
19–20	183	195
21–22	198	210
23–24	214	226
25–26	229	241
27–28	244	256
29–30	260	272

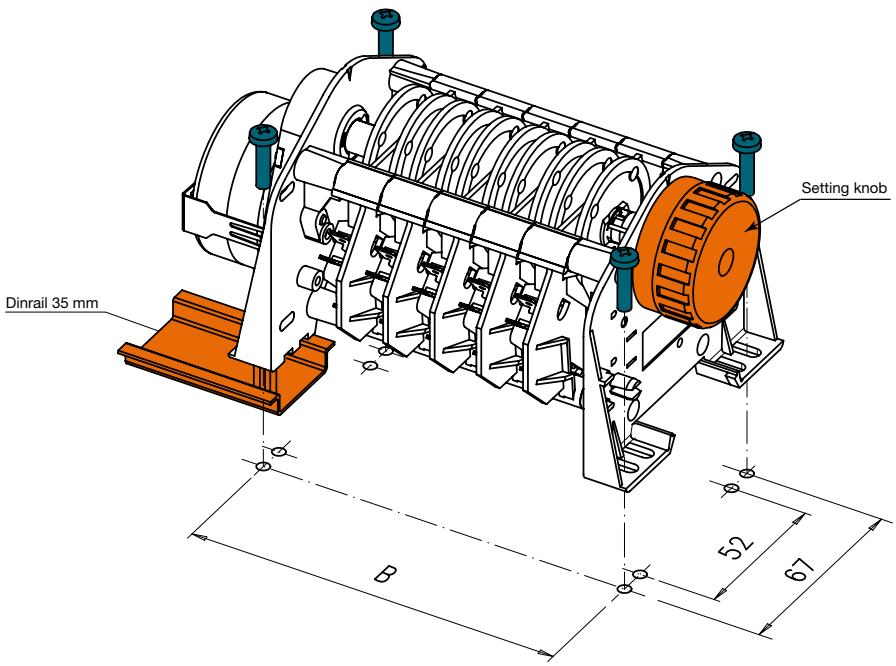

KKD3

Bidirectional, synchronous programmer equipped with a 1 kOhm potentiometer.

Allows the angular position of the axis to be read remotely.

Market

Healthcare & Medical Equipment, Personal Care, Building Automation & Security, White Goods, Home Appliances, Heating Ventilation & Air Conditioning, Industrial equipment & automation, Business Machines

Application

swiming pool, fountain variables, fog horn, bell towers, heating ventilation, automation, galvano, test equipment, food specialities, botteling, newspaper, Vending machines, feeding systems

Characteristics

	standard	optional	on request
Program	bidirectional with potentiometer 1 k ohm	with adjusable segment «S» cams or jumper «R» cams	other potentiometer value
Nbre channels	max. 30		
Prog. duration	from 10 sec to 120 h		
Driving	bidirectional synchronous motor		
Voltage	230 V, 50 Hz or 110 V, 60 Hz		other voltages on request
Switching power	12 (6) A; UL 10 A		other switching power on request
Approvals	standard EC	UL approval	

Order Reference

Type	Cam Programmer with birotational synchronious motor with potentiometer 1 kOhm												KKD3	1	6	02	B4	E1	N	00
Setting knob	**0** without knob **1** with internal knob																			
Number of channels	1	2	3	4	5	6	7	8	9	10	11	12								
	1	**2**	**3**	**4**	**5**	**6**	**7**	**8**	**9**	**A**	**B**	**C**								
	13	14	15	16	18	20	22	24	25	26	28	30								
	D	**E**	**F**	**G**	**J**	**M**	**P**	**R**	**S**	**T**	**V**	**W**								
Type of cams diagrams	**01** with S cams **02** with R cams **03** to **99** customer specific diagram number																			
Programm duration	**B1** 1 s	**B2** 10 s	**D3** 1.25 min	**R3** 6 min	**K4** 36 min															
	E1 1.5 s	**C2** 12 s	**E3** 1.5 min	**S3** 7.5 min	**B5** 1 h															
	J1 3 s	**E2** 15 s	**F3** 2 min	**B4** 10 min	**E5** 1.5 h	**S5** 7.5 h														
	M1 4 s	**F2** 20 s	**J3** 3 min	**E4** 15 min	**F5** 2 h	**B6** 10 h														
	Q1 5 s	**J2** 30 s	**M3** 4 min	**W4** 18 min	**J5** 3 h	**C6** 12 h														
	R1 6 s	**B3** 1 min	**Q3** 5 min	**J4** 30 min	**R5** 6 h	**G6** 24 h														
Supply voltage	**B4** 24 V 50 Hz	**E1** 230 V 50 Hz	**J1** 110 V 60 Hz																	
Approval	**N** standard EC	**U** with UL-CSA approval																		
Execution	**00** standard **01** to **99** specific customer execution																			

On request: other program duration; other voltage; higher electrical rating of microswitches; other potentiometer value on KKD3 (50 Ohm to 10kOhm)

Accessories:
additional 6° snap-on riders for R-cams **4 264 4802 0**
additional 12° snap-on riders for R-cams **4 264 4801 0**

KKD3

Circuit diagram

KKD3

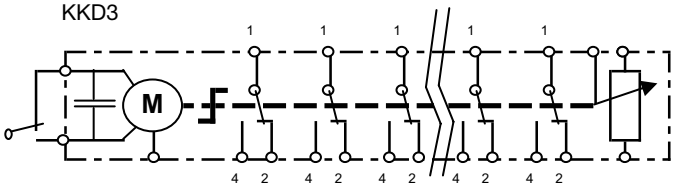

Dimensions

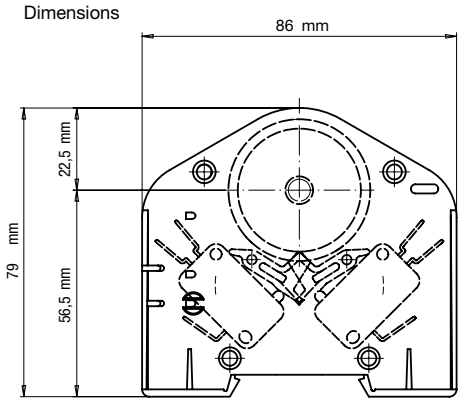

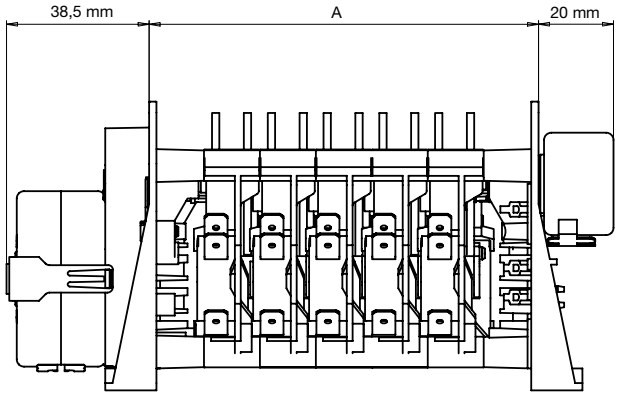

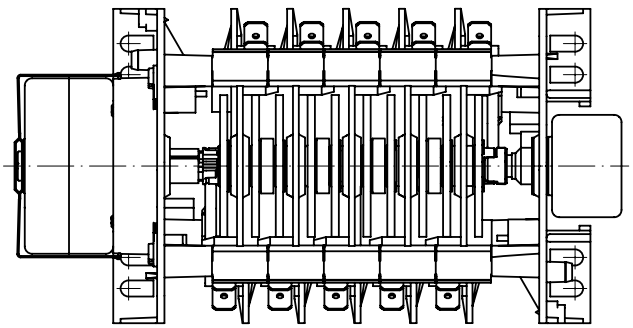

Number of program channels	Dimensions (mm)	
	A	B
1–2	45.3	57.3
3–4	60.6	72.6
5–6	76	88
7–8	91	103
9–10	106.5	118.5
11–12	122	134
13–14	137	149
15–16	152	164
17–18	168	180
19–20	183	195
21–22	198	210
23–24	214	226
25–26	229	241
27–28	244	256
29–30	260	272

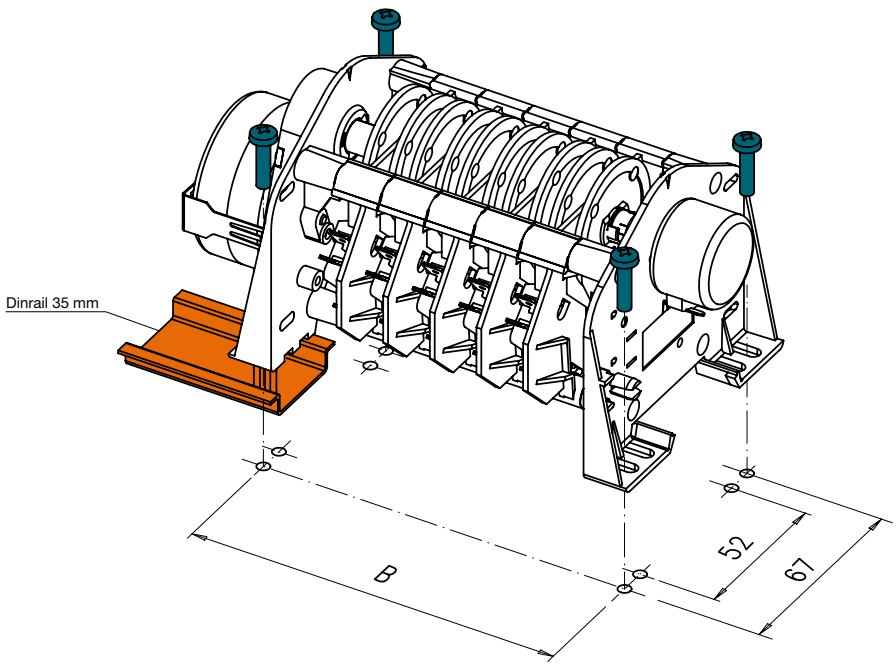

KKD6

Stepper-motor driven cam programmer.

Allows free program flow in both directions, rotating at different speeds, incorporating stops, accelerations, returns, etc.

Market

Healthcare & Medical Equipment, Personal Care, Building Automation & Security, White Goods, Home Appliances, Heating Ventilation & Air Conditioning, Industrial equipment & automation, Business Machines

Application

swiming pool, fountain variables, fog horn, bell towers, heating ventilation, automation, galvano, test equipment, food specialities, botteling, newspaper, milk truck cleanning, carwash, milking equipment, bookbinding, Vending machines, feeding systems

Characteristics

	standard	optional	on request
Program	with stepper motor	with adjusable segment «S» cams or jumper «R» cams	
Nbre channels	max. 30		
Prog. duration	from 10 sec to 120 h		
Driving	birotational stepper motor		
Voltage	230 V, 50 Hz or 110 V, 60 Hz		other voltages on request
Switching power	12 (6) A; UL 10 A		other switching power on request
Approvals	standard EC	UL approval	

Order Reference

Type	Cam Programmer with birotational stepper motor												KKD6	2	C	02	B4	M1	N	00
Setting knob	**0** without knob **2** with external knob																			
Number of channels	1	2	3	4	5	6	7	8	9	10	11	12								
	1	**2**	**3**	**4**	**5**	**6**	**7**	**8**	**9**	**A**	**B**	**C**								
	13	14	15	16	18	20	22	24	25	26	28	30								
	D	**E**	**F**	**G**	**J**	**M**	**P**	**R**	**S**	**T**	**V**	**W**								
Type of cams diagrams	**01** with S cams **02** with R cams **03** to **99** customer specific diagram number																			
Programm duration (at typical frequency 200 Hz)	**B1**	1 s	**B2**	10 s	**D3**	1.25 min	**R3**	6 min	**K4**	36 min										
	E1	1.5 s	**C2**	12 s	**E3**	1.5 min	**S3**	7.5 min	**B5**	1 h										
	J1	3 s	**E2**	15 s	**F3**	2 min	**B4**	10 min	**E5**	1.5 h	**S5**	7.5 h								
	M1	4 s	**F2**	20 s	**J3**	3 min	**E4**	15 min	**F5**	2 h	**B6**	10 h								
	Q1	5 s	**J2**	30 s	**M3**	4 min	**W4**	18 min	**J5**	3 h	**C6**	12 h								
	R1	6 s	**B3**	1 min	**Q3**	5 min	**J4**	30 min	**R5**	6 h	**G6**	24 h								
Supply voltage	**M1** 12 VDC																			
Approval	**N** standard EC **U** with UL-CSA approval																			
Execution	**00** standard **01** to **99** specific customer execution																			

On request	other program duration	other voltage	higher electrical rating of microswitches
Accessories	additional 6° snap-on riders for R-cams additional 12° snap-on riders for R-cams	**4 264 4802 0** **4 264 4801 0**	Electronic driving board Samotronic 102 see page 183

Cam Programmers

KKD6

Circuit diagram

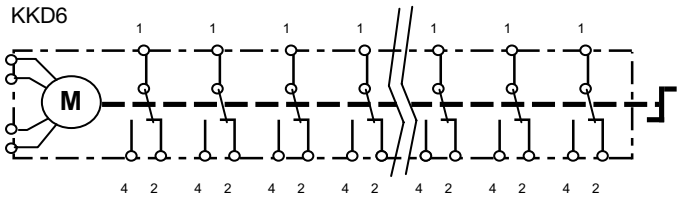

Dimensions

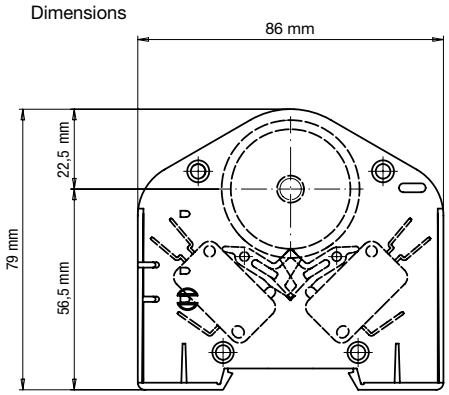

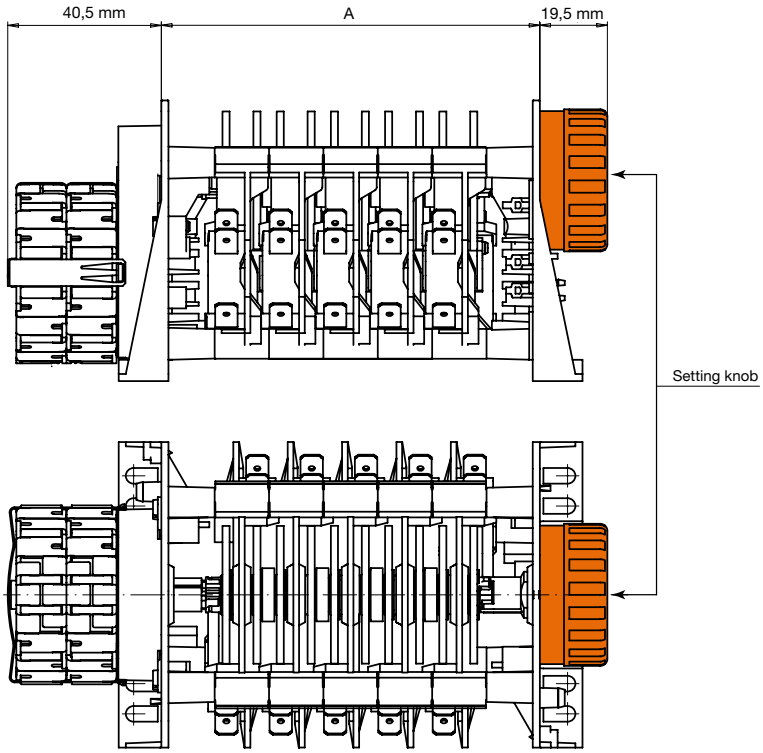

Number of program channels	Dimensions (mm)	
	A	B
1–2	45.3	57.3
3–4	60.6	72.6
5–6	76	88
7–8	91	103
9–10	106.5	118.5
11–12	122	134
13–14	137	149
15–16	152	164
17–18	168	180
19–20	183	195
21–22	198	210
23–24	214	226
25–26	229	241
27–28	244	256
29–30	260	272

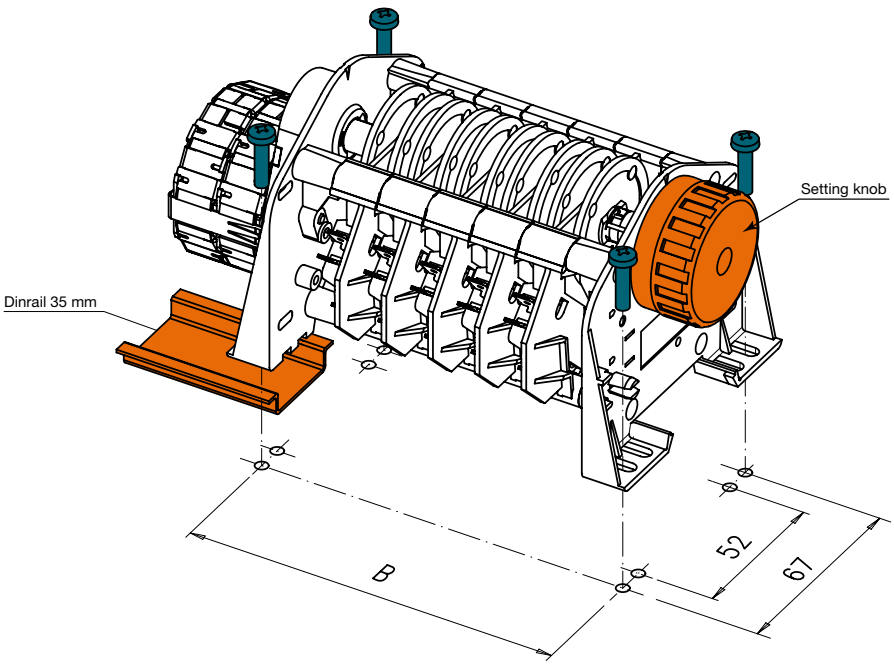

KKD4

Cam programmer without motor.

Rotation of the axis is initiated by an exterior drive.

Market

Heating Ventilation & Air Conditioning, Industrial equipment & automation, Business Machines

Application

heating ventilation, food specialities, bookbinding, feeding systems

Characteristics

	standard	optional	on request
Program	no motor but shaft for external driving	with adjusable segment «S» cams or jumper «R» cams	
Nbre channels	max. 30		
Prog. duration	following customers driving		
Driving	no motor		
Switching power	12 (6) A; UL 10 A		other switching power on request
Approvals	standard EC	UL approval	

Order Reference

Type	Cam Programmer without motor and gearbox												KKD4	2	6	01	A0 X8	N	00
Setting knob	**0** without knob **1** with internal knob **2** with external knob																		
Number of channels	1	2	3	4	5	6	7	8	9	10	11	12							
	1	**2**	**3**	**4**	**5**	**6**	**7**	**8**	**9**	**A**	**B**	**C**							
	13	14	15	16	18	20	22	24	25	26	28	30							
	D	**E**	**F**	**G**	**J**	**M**	**P**	**R**	**S**	**T**	**V**	**W**							
Type of cams diagrams	**01** with S cams **02** with R cams **03** to **99** customer specific diagram number																		
Approval	**N** standard EC **U** with UL-CSA approval																		
Execution	**00** standard **01** to **99** specific customer execution																		

On request: higher electrical rating of microswitches; shaft with special length

Accessories:
additional 6° snap-on riders for R-cams **4 264 4802 0**
additional 12° snap-on riders for R-cams **4 264 4801 0**

Cam Programmers

KKD4

Circuit diagram

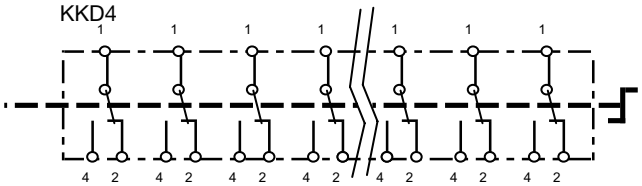

Dimensions

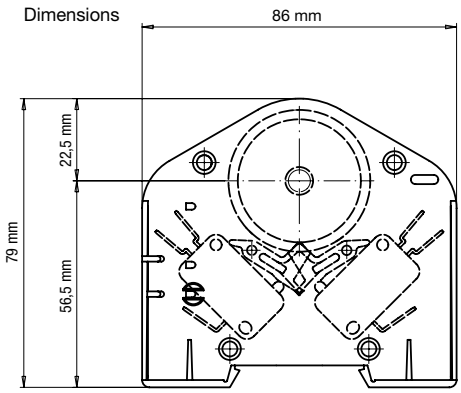

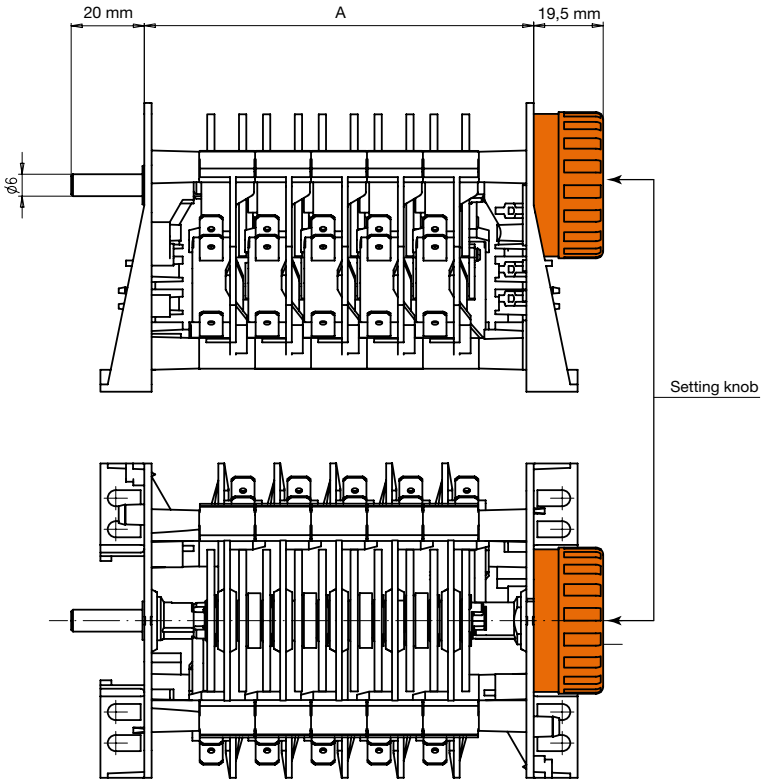

Number of program channels	Dimensions (mm)	
	A	B
1–2	45.3	57.3
3–4	60.6	72.6
5–6	76	88
7–8	91	103
9–10	106.5	118.5
11–12	122	134
13–14	137	149
15–16	152	164
17–18	168	180
19–20	183	195
21–22	198	210
23–24	214	226
25–26	229	241
27–28	244	256
29–30	260	272

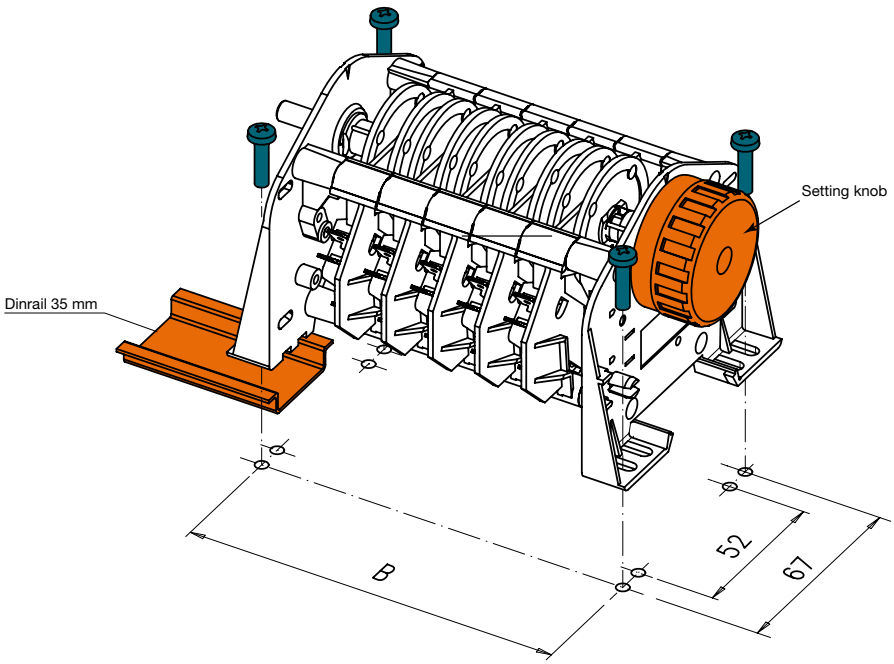

Hand settable timers

Dimensions

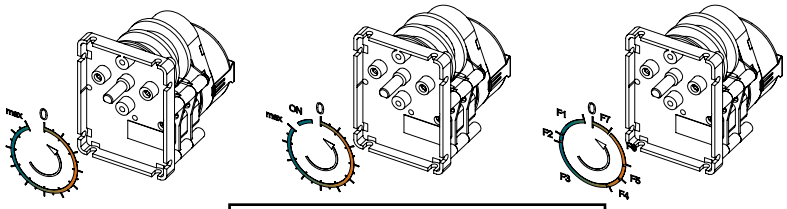

Switching program

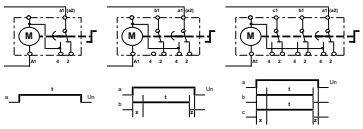

JOHNSON ELECTRIC

innovating motion

KKH

Synchronous timers with manual control.

Large choice of time range.

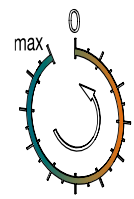

Market

Healthcare & Medical Equipment, Personal Care, Building Automation & Security, White Goods, Home Appliances, Heating Ventilation & Air Conditioning, Industrial equipment & automation, Business Machines

Application

hair dryers, solariums, saunas, whirepool, swiming pool, fountain variables, fog horn, bell towers, coffee machine, heating ventilation, pottery ovens, automation, galvano, test equipment, food specialities, botteling, newspaper, milk truck cleanning, carwash, battery loader, milking equipment, drying, bookbinding, Vending machines, feeding systems

Characteristics

	standard	optional	on request
Program		with adjusable segment «S» cams or jumper «R» cams	
Nbre channels	1, 2 or 3		
Prog. duration	1 min to 24 h		
Driving	unidirectional synchronous motor		
Voltage	230 V, 50 Hz or 110 V, 60 Hz		other voltages on request
Switching power	16 (6) A; UL 15 A		other switching power on request
Approvals	standard EC	UL approval	

Order Reference

Type	Hand settable timer										KKH	3	0	200	E4	E1	N	00

Shaft
- **1** shaft with flat (5mm)
- **3** round shaft

Fixing
- **0** fixing by self tapping screws
- **3** fixing by M3 screws
- **4** fixing by M4 screws

Number of channels
- **100** 1 channel
- **200** 2 channels
- **300** 3 channels

Programm duration

B2	10 s	**B3**	1 min	**M3**	4 min	**E4**	15 min	**E5**	1.5 h		
C2	12 s	**D3**	1.25 min	**Q3**	5 min	**W4**	18 min	**F5**	2 h		
E2	15 s	**E3**	1.5 min	**R3**	6 min	**J4**	30 min	**J5**	3 h	**B6**	10 h
F2	20 s	**F3**	2 min	**S3**	7.5 min	**K4**	36 min	**R5**	6 h	**C6**	12 h
J2	30 s	**J3**	3 min	**B4**	10 min	**B5**	1 h	**S5**	7.5 h	**G6**	24 h

Supply voltage
- **B4** 24 V 50 Hz
- **E1** 230 V 50 Hz
- **J1** 110 V 60 Hz

Approval
- **N** standard EC
- **U** with UL-CSA approval

Execution
- **00** standard
- **01** to **99** specific customer execution

On request
- shaft with flat (4.6mm) instead of 5mm
- fixing distance 28.5mm instead of 30mm
- shaft with special length 20 or 25mm instead of 15mm
- other program duration
- other voltage

Accessories

Self tapping screw (to fix the KKH are 2 pcs needed)		**4 184 4004 0**
Setting knob with arrow	(for output shaft without milling)	**4 268 4887 0**
Setting knob with arrow	(for output shaft with 5mm flat)	**4 268 5051 0**

Scale (for fixing dist. 30mm)

5 min	**4 328 4887 5**	30 min	**4 328 4875 5**	6 h	**4 328 4800 5**
6 min	**4 328 4858 5**	60 min	**4 328 4859 5**	12 h	**4 328 4860 5**
15 min	**4 328 4872 5**	120 min	**4 328 4873 5**	24 h	**4 328 4870 5**

Circuit diagram KKH--100 KKH--200 KKH--300

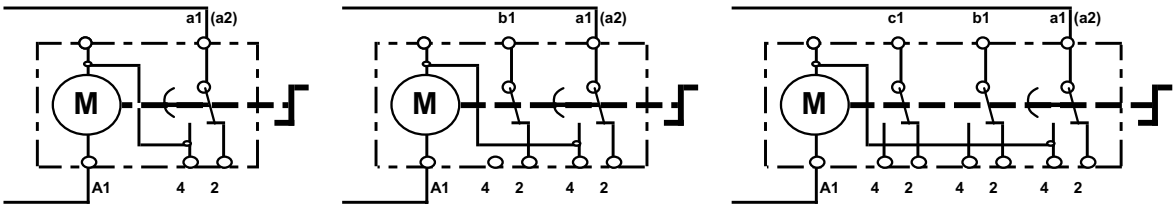

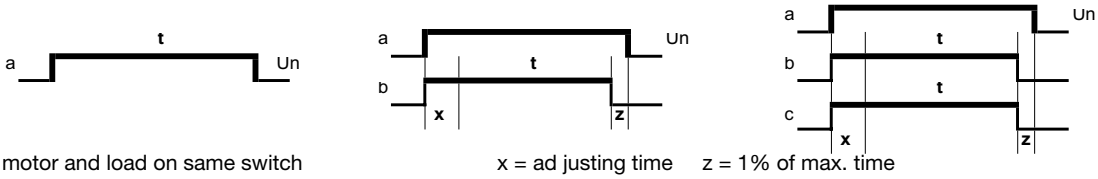

motor and load on same switch x = ad justing time z = 1% of max. time

Dimensions KKH--100 KKH--200 KKH--300

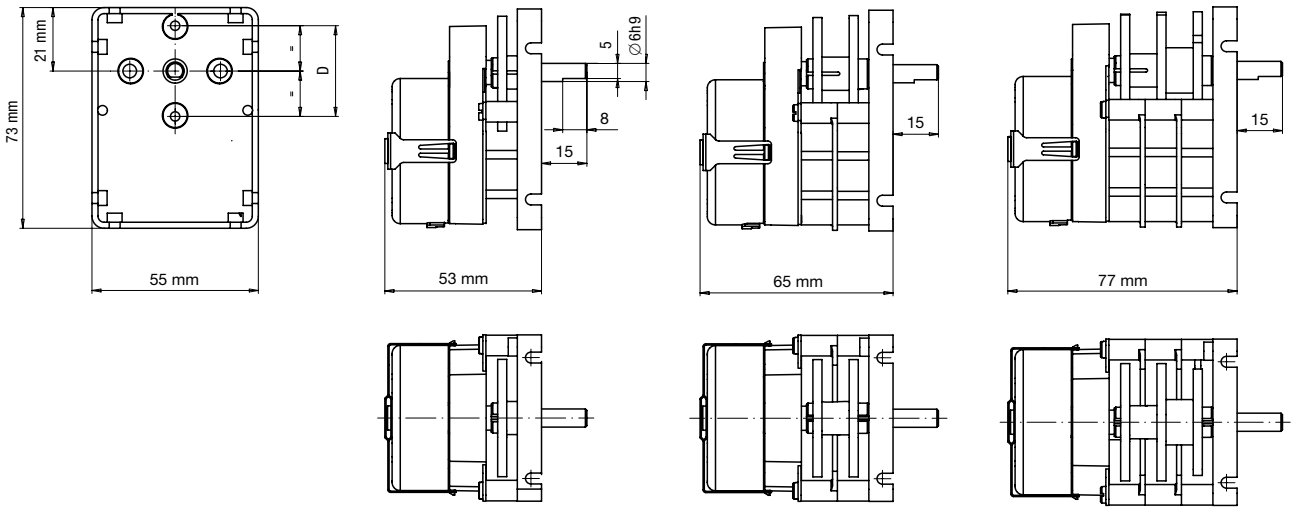

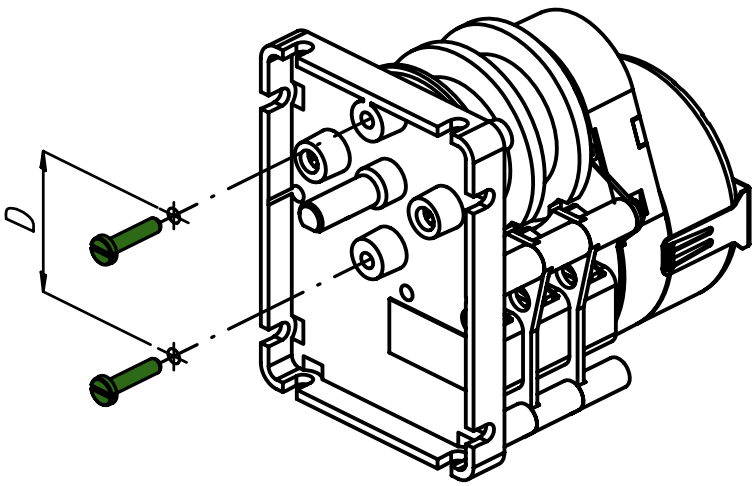

Hand settable timer

KKH - - 288/- -388

Manual timer with «on» (without timing) position.

With galvanic separated load.

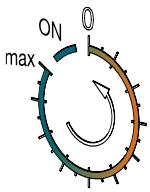

Market

Healthcare & Medical Equipment, Personal Care, Building Automation & Security, White Goods, Home Appliances, Heating Ventilation & Air Conditioning, Industrial equipment & automation, Business Machines

Application

hair dryers, solariums, saunas, whirepool, swiming pool, fountain variables, fog horn, bell towers, heating ventilation, pottery ovens, automation, galvano, test equipment, food specialities, botteling, newspaper, milk truck cleanning, carwash, battery loader, milking equipment, drying, bookbinding, Vending machines, feeding systems

Characteristics

	standard	optional	on request
Programm	motor and load on separate switches	with adjusable segment «S» cams or jumper «R» cams	
Nbre channels	2 or 3		
Prog. duration	1 min to 24 h		
Driving	unidirectional synchronous motor		
Voltage	230 V, 50 Hz or 110 V, 60 Hz		other voltages on request
Switching power	16 (6) A; UL 15 A		other switching power on request
Approvals	standard EC	UL approval	

Order Reference

Type	Timer with «ON» position										KKH	3	0	288	R3	B4	N	00
Shaft	**1**	shaft with flat (5mm)																
	3	round shaft																
Fixing	**0**	fixing by self tapping screws																
	3	fixing by M3 screws (dist. 30 mm)																
	4	fixing by M4 screws																
Number of channels	**288**	2 channels																
	388	3 channels																
Programm duration	**B2**	10 s	**B3**	1 min	**M3**	4 min	**E4**	15 min	**E5**	1.5 h								
	C2	12 s	**D3**	1.25 min	**Q3**	5 min	**W4**	18 min	**F5**	2 h								
	E2	15 s	**E3**	1.5 min	**R3**	6 min	**J4**	30 min	**J5**	3 h	**B6**	10 h						
	F2	20 s	**F3**	2 min	**S3**	7.5 min	**K4**	36 min	**R5**	6 h	**C6**	12 h						
	J2	30 s	**J3**	3 min	**B4**	10 min	**B5**	1 h	**S5**	7.5 h	**G6**	24 h						
Supply voltage	**B4**	24 V 50 Hz	**E1**	230 V 50 Hz	**J1**	110 V 60 Hz												
Approval	**N**	standard EC	**U**	with UL-CSA approval														
Execution	**00**	standard																
	01 to **99**	specific customer execution																

On request: shaft with flat (4.6mm) instead of 5mm; shaft with special length 20 or 25mm instead of 15mm; fixing distance 28.5mm instead of 30mm; other program duration; other voltage

Accessories:

Self tapping screw (to fix the KKH are 2 pcs needed)		**4 184 4004 0**
Setting knob with arrow	(for output shaft without milling)	**4 268 4887 0**
Setting knob with arrow	(for output shaft with 5mm flat)	**4 268 5051 0**

Hand settable timer

KKH - - 288/- -388

Circuit diagram

KKH--288

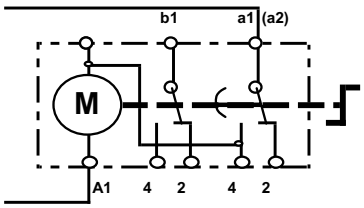

KKH--388

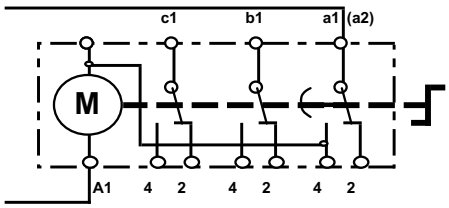

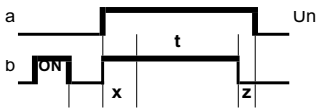

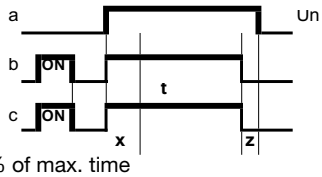

x = ad justing time z = 1% of max. time

Dimensions

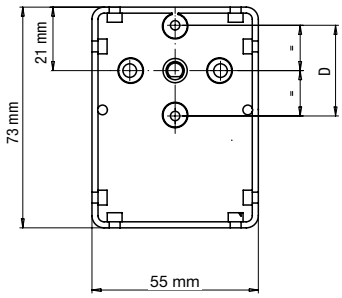

KKH--288

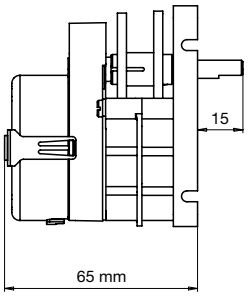

KKH--388

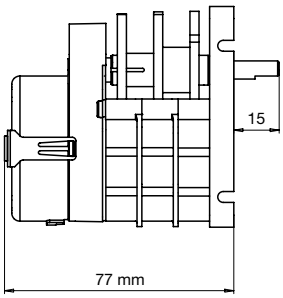

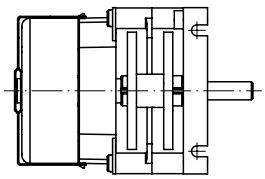

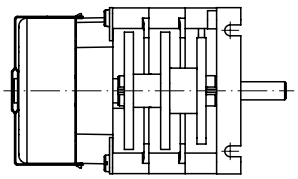

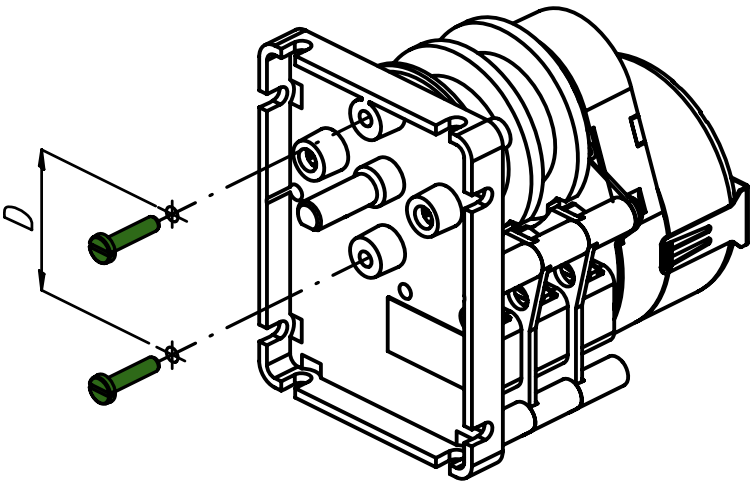

KKH - - - - -

Synchronous manual timer, 1, 2 or 3 channels

Programmed according customer's diagram.

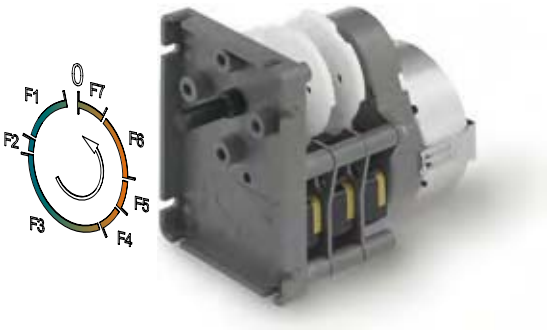

Market

Healthcare & Medical Equipment, Personal Care, Building Automation & Security, White Goods, Home Appliances, Heating Ventilation & Air Conditioning, Industrial equipment & automation, Business Machines

Application

whirepool, swiming pool, fountain variables, fog horn, bell towers, coffee machine, heating ventilation, automation, galvano, test equipment, food specialities, botteling, newspaper, milk truck cleanning, carwash, milking equipment, bookbinding, Vending machines, feeding systems

Characteristics

	standard	optional	on request
Program	milled cams according customer requests	with adjusable segment «S» cams or jumper «R» cams	
Nbre channels	2		
Prog. duration	1 min to 24 h		
Driving	unidirectional synchronous motor		
Voltage	230 V, 50 Hz or 110 V, 60 Hz		other voltages on request
Switching power	16 (6) A; UL 15 A		other switching power on request
Approvals	standard EC	UL approval	

Order Reference

Type	Hand settable programmer										KKH	3	0	3	27	B5	J1	U	00
Shaft	**1**	shaft with flat (5mm)																	
	3	round shaft																	
Fixing	**0**	fixing by self tapping screws																	
	3	fixing by M3 screws (dist. 30 mm)																	
	4	fixing by M4 screws																	
Number of channels	**1, 2** or **3**	channels																	
	03 to **77**	customer specific diagram number																	
Programm duration	**B2**	10 s	**B3**	1 min	**M3**	4 min	**E4**	15 min	**E5**	1.5 h									
	C2	12 s	**D3**	1.25 min	**Q3**	5 min	**W4**	18 min	**F5**	2 h									
	E2	15 s	**E3**	1.5 min	**R3**	6 min	**J4**	30 min	**J5**	3 h	**B6**	10 h							
	F2	20 s	**F3**	2 min	**S3**	7.5 min	**K4**	36 min	**R5**	6 h	**C6**	12 h							
	J2	30 s	**J3**	3 min	**B4**	10 min	**B5**	1 h	**S5**	7.5 h	**G6**	24 h							
Supply voltage	**B4**	24 V 50 Hz	**E1**	230 V 50 Hz	**J1**	110 V 60 Hz													
Approval	**N**	standard EC	**U**	with UL-CSA approval															
Execution	**00**	standard																	
	01 to **99**	specific customer execution																	

On request: shaft with flat (4.6mm) instead of 5mm; shaft with special length 20 or 25mm instead of 15mm; fixing distance 28.5mm instead of 30mm; other programm duration; other voltage

Accessories:

Self tapping screw (to fix the KKH are 2 pcs needed)		**4 184 4004 0**
Setting knob with arrow	(for output shaft without milling)	**4 268 4887 0**
Setting knob with arrow	(for output shaft with 5mm flat)	**4 268 5051 0**

Hand settable timer

KKH - - - - -

Circuit diagram KKH--1-- KKH--2-- KKH--3--

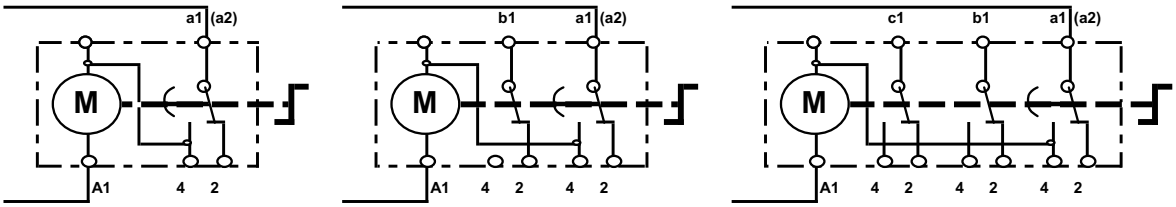

according customers requests

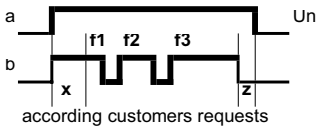

according customers requests

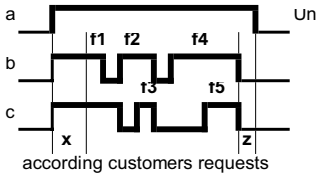

according customers requests

x = ad justing time z = 1% of max. time

Dimensions KKH--1-- KKH--2-- KKH--3--

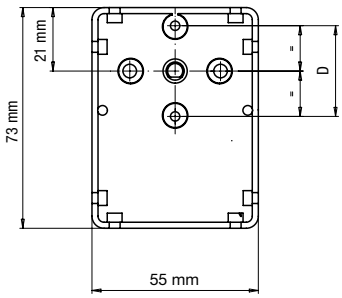

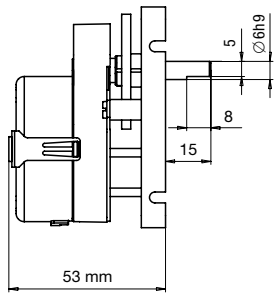

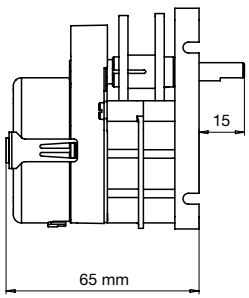

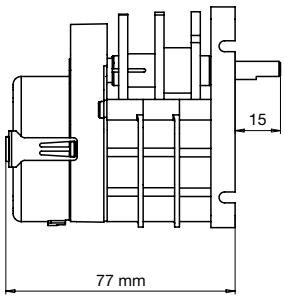

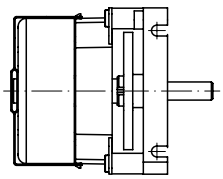

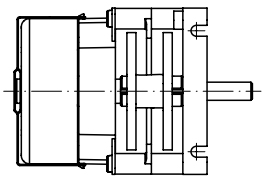

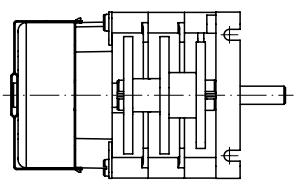

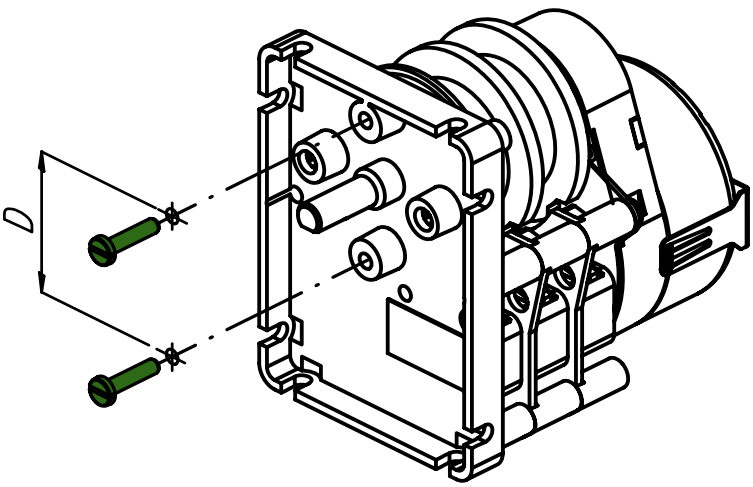

Cam Programmer's accessories

dial for KKH	(screw dist 30mm)	5 min	4 328 4887 5
		6 min	4 328 4858 5
		15 min	4 328 4872 5
		30 min	4 328 4875 5
		60 min	4 328 4859 5
		120 min	4 328 4873 5
		6 h	4 328 4800 5
		12 h	4 328 4860 5
		24 h	4 328 4870 5
		96 h	4 328 4876 5
self-tap. screw		for KKH	4 184 4004 0

knob with arrow	for round shaft	for KKH	4 268 4887 0
knob with arrow	for shaft with flat		4 268 5051 0

fixing bridle		for KKP	4 109 4815 0

actuator			4 263 4929 0
actuator J		(ajustable)	4 263 4930 0

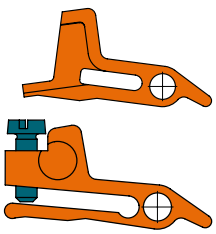

b-cam uncut			4 260 4843 0
setting key		for S-cam	4 109 4804 0
s-cam			4 260 4826 0

setting key		for R-cam	4 109 4805 0
r-cam			4 260 4827 0
rider		12°	4 264 4801 0
		6°	4 264 4802 0

AMP double plug	male-male	4 423 4868 0
AMP sleeve	female	4 423 4802 0

Accessories

Headquarters

Johnson Electric Holdings Limited
Johnson Building, 6-22 Dai Shun St, Tai Po Industrial
Estate, New Territories
Hong Kong
T +852 2663 6688
F +852 2897 2054
e-mail: salessupport@johnsonelectric.com

Sales Offices

Asia

Shanghai, China
12/F, Hua Rong Tower
1289 Pudong Road South
Shanghai
200122 China
T +86 21 5882 2880
F +86 21 5882 2800

Shenzhen China
2/F., Block 10,
Furong Industrial Estate
Xinqiao, Shajing
Baoan District
Shenzhen 518125 China
T +86 755 2990 0886
F +86 755 2990 0890

Tokyo, Japan
Keihin Higashi-Ohi Bldg.
10/F, 2-13-8 Higashi-Ohi
Shinagawa-ku
Tokyo 140-0011 Japan
T +81 3 5762 1031
F +81 3 5762 1032

Seoul, Korea
6th Fl, Fine Bldg. 701-6
Banpo-Dong, Seocho-Ku
Seoul, Korea 137-808
T +82 2 518 8347/8341
F +82 2 518 8342

Singapore
1 Maritime Square #09-02,
Harbour Front Centre
Singapore 048623
T +65 6224 7570
F +65 6224 4538

Europe

ustria
Slovenia, Slovakia, Hungary,
Czech Republic
Linzer Bundesstrasse 101
A-5023 **Salzburg**
T +43 662 88 4910
F +43 662 88 4910 11

France
10 Bld. Louise Michel
F-92230 **Gennevilliers**
T +33 1 46 88 07 70
F +33 1 46 88 07 99

78 Boulevard du 11 Novembre
69003 **Villeurbanne**
T +33 4 37 48 84 60
F +33 4 72 43 90 11

Germany
Sweden, Denmark,
Norway, Finland
Weissenpferd 9
D-58553 **Halver**
T +49 2353 911 0
F +49 2353 911 230

Italy
Via Cadamosto 3
I-20094 **Corsico,** Milano
T +39 02 4869 21
F +39 02 4860 0692

Switzerland
Poland, Spain, Turkey, Portugal
Bahnhofstrasse 18
CH-3280 **Murten**
T +41 26 672 71 11
F +41 26 670 19 83

The Netherlands/Belgium
Hanzeweg 12c
NL-2803 MC **Gouda**
T +31 1825 43 154
F +31 1825 43 151

United Kingdom/Ireland
Dukesway
Team Valley Trading Estate
Gateshead
Tyne & Wear NE11 0UB
United Kingdom
T +44 191 401 61 00
F +44 191 401 63 05

Americas

Connecticut
10 Progress Drive
Shelton, CT 06484
T +1 203 447 5362
F +1 203 447 5383

Ohio
801 Scholz Drive
Vandalia, OH 45377
T +1 937 454 2345
F +1 937 898 8624

Ontario, Canada
70 Ironside Crescent Unit 7
Scarborough, **Ontario**
M1X 1G4 Canada
T +1 416 299 0852
F +1 416 299 6756

Sao Paulo, Brazil
Av. Papa Joao Paulo I - 1256
CEP 07170-350
Guarulhos **Sao Paulo,** Brazil
T (55) 11-643 156 00
F (55) 11-643 247 11

Johnson Electric Group
Johnson Building, 6-22 Dai Shun Street
Tai Po Industrial Estate, N.T., Hong Kong
Tel: (852) 2663 6688
Fax: (852) 2663 6110
Web Site: www.johnsonelectric.com

IPG310/07/E/02