AG Series

XP Power

1 & 1.5W CONVECTION COOLED

DC-HVDC CONVERTER

The AG Series is a broad line of ultra-miniature DC to HVDC converters that sets an industry standard in high voltage miniaturization. This unique package occupies less than one tenth of a cubic inch of volume and an extremely low profile of only 0.128 inches (3.25mm) when mounted in from the top, or 0.152 (3.86mm) when mounted in from the bottom of the PCB. They can also mount off the PCB with 0.030” diameter pins. They are offered in 1 watt or 1.5 watt power ratings, with output voltages ranging from 100 volts to 6000 volts. The output is directly proportional to the input voltage and is linear from <0.7V input to maximum input voltage. Output is load dependent. Isolation permits <±500V bias on output return. No external components or minimum load are required.

A separate high impedance control pin is standard and is designed for external error amplifier and/or DAC control in closed or open loop systems, or simply connect the control pin to the + input for proportional input to output operation. Use of a resonant, quasi-sinewave oscillator and fully shielded transformer result in clean, reliable high voltage conversion with inherently low ripple, EMI/RFI and input ripple current, making this product ideal for integration into noise sensitive equipment.

Features

- Output voltages from 100V to 6000V
- Output Proportional to Input
- 0.7VDC Turn-on Voltage
- Extremely Low Profile <0.25”
- Surface Mount
- Input to Output Isolation
- Short Circuit Protection
- Control Pin
- No minimum load
- 3 Year Warranty

Typical Applications

- Avalanche Photo Diodes
- Photo Multiplier Tubes
- Electrophoresis
- Capacitor Charging
- Sustaining Ion Pumps
- Piezo Devices
- Handheld Instruments

Dimensions

All models:
Height x Width: 0.25 x 0.45" (6.35 x 11.43mm)

100V to 2000V outputs:
Length: 0.92" (23.37mm)

6000V outputs:
Length: 1.33" (33.78mm)

3000V to 5000V outputs:
Length: 1.13" (28.69mm)

Dimensions do not include the surface mount tabs, see mechanical details

Input

Characteristic	Minimum	Typical	Maximum	Units	Notes & Conditions
Input Voltage	0.7		5, 12, 24	VDC	See Models & Ratings table
Input Current			650	mA	See Models & Ratings table
Control Voltage Input	Analog Control Voltage adjusts output from 0 to 100%, not to exceed Input Voltage, see Application Notes				

sales@prom-elec.com / ООО ПРОМЭЛЕКТРОНИКА

Output

Characteristic	Minimum	Typical	Maximum	Units	Notes & Conditions
Output Voltage			6000	VDC	See Models & Ratings table
Output Current			15	mA	See Models & Ratings table
Output Voltage Tolerance		±10		%	At Max Vout, Full Load
Minimum Load	No minimum load required				
Regulation	Unregulated, Output is proportional to Input. See Application Notes				
Short Circuit Protection	Protected against short circuit conditions for a minimum 1 minute				
Ripple and Noise	0.3		5	%	See Models & Ratings table

General

Characteristic	Minimum	Typical	Maximum	Units	Notes & Conditions
Isolation: Input to Output			500	V	<±500VDC Bias on Output Return
Leakage Current			100	nA	
Switching Frequency	50		350	kHz	
Construction	Solid vacuum encapsulation, UL 94 V-0 rated				
Mean Time Between Failure	1.862			MHrs	Bellcore TR 332, GB +25°C

Environmental

Characteristic	Minimum	Typical	Maximum	Units	Notes & Conditions
Operating Temperature (case)	-25		+75	°C	Standard operating temperature
Operating Temperature (case)	-55		+85	°C	Extended operating temperature, -T models
Storage Temperature	-55		+105	°C	
Cooling	Natural convection				
Humidity			95	%RH	Non-condensing

Safety Approvals

Certification	Standard	Notes & Conditions
UL	IEC/UL/CSA/EN62368	
CE	Meets all applicable directives	
RoHS	RoHS 2 and 3 Directive (2011/65/EU)	Where applicable

Notes:

1. Maximum output current is available at maximum rated output voltage, and derates linearly as input voltage is decreased.
2. Output Voltage is load dependent. Under light or no-load conditions, reduce the Input Voltage so maximum rated Output Voltage is not exceeded.
3. Specifications are after 30 minute warm-up, full-load at 25°C, unless otherwise noted.
4. Proper thermal management techniques are required to maintain safe case temperature at maximum power output.

Block Diagram

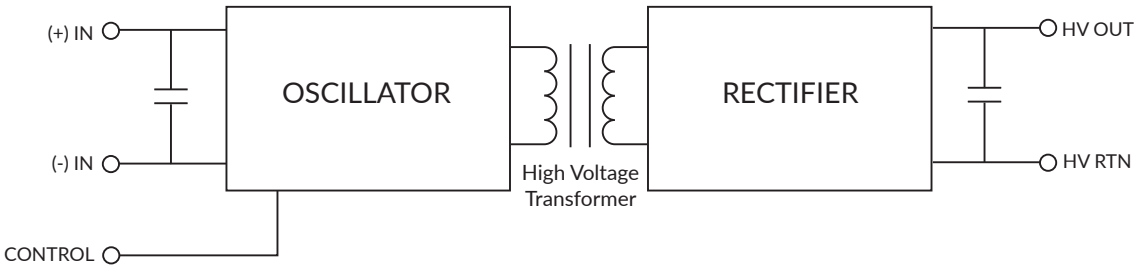

Pin	Connections
1	(-) Input
2	(+) Input
3	HV Out
4	HV RTN
5	Control

Recommended Solder Profile

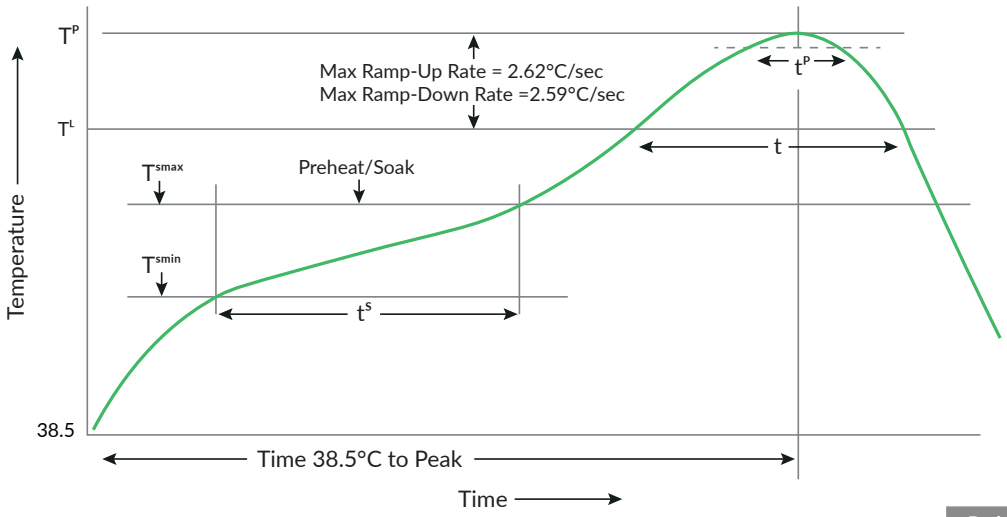

Preheat/Soak	
Temp Tsmin	120°C
Temp Tsmax	180°C
Time t^S (tsmin to tsmax)	77sec
Time Above Liquidus	
Temp T^L	217°C
Time T^L	44sec
Peak Temp T^P	237.5°C
Peak Time >230°C T^P	16sec
Time 38.5°C to Peak T^P	4min 18sec
Max Ramp Rates	+/-2.6°C/sec

Models & Ratings

Model Number	Output Voltage	Output Current	Input Voltage	Input Current, No Load	Input Current, Full Load	Ripple
			1 Watt AG Models			
AG01N-12T	0 to -100V	10mA	12V	<100mA	<185mA	<5%
AG01P-24	0 to +100V	10mA	24V	<25mA	<60mA	<5%
AG01P-5	0 to +100V	10mA	5V	<300mA	<500mA	<5%
AG02N-5T	0 to -200V	5mA	5V	<300mA	<500mA	<1%
AG02P-5	0 to +200V	5mA	5V	<300mA	<500mA	<1%
AG025P-12	0 to +250V	4mA	12V	<100mA	<185mA	<0.9%
AG03P-12	0 to +300V	3.33mA	12V	<100mA	<185mA	<0.7%
AG03P-5	0 to +300V	3.33mA	5V	<300mA	<500mA	<0.7%
AG04P-5	0 to +400V	2.5mA	5V	<300mA	<500mA	<0.5%
AG05P-12	0 to +500V	2mA	12V	<100mA	<185mA	<0.5%
AG05P-5	0 to +500V	2mA	5V	<300mA	<500mA	<0.5%
AG06P-5	0 to +600V	1.67mA	5V	<300mA	<500mA	<1%
AG07N-24T	0 to -700V	1.43mA	24V	<25mA	<60mA	<0.5%
AG10N-5	0 to -1000V	1mA	5V	<300mA	<500mA	<0.8%
AG10P-12	0 to +1000V	1mA	12V	<100mA	<185mA	<0.8%
AG10P-5	0 to +1000V	1mA	5V	<300mA	<500mA	<0.8%
AG12N-5	0 to -1200V	0.83mA	5V	<300mA	<500mA	<0.5%
AG12P-5	0 to +1200V	0.83mA	5V	<300mA	<500mA	<0.5%
AG15P-5	0 to +1500V	0.66mA	5V	<300mA	<500mA	<0.4%
AG20N-12	0 to -2000V	0.5mA	12V	<100mA	<185mA	<0.3%
AG20N-5	0 to -2000V	0.5mA	5V	<300mA	<500mA	<0.3%
AG20P-5	0 to +2000V	0.5mA	5V	<300mA	<500mA	<0.3%
AG30N-12	0 to -3000V	0.33mA	12V	<100mA	<185mA	<0.3%
AG30N-5	0 to -3000V	0.33mA	5V	<300mA	<500mA	<0.3%
AG30N-5T	0 to -3000V	0.33mA	5V	<300mA	<500mA	<0.3%
AG30P-12	0 to +3000V	0.33mA	12V	<100mA	<185mA	<0.3%
AG30P-24T	0 to +3000V	0.33mA	24V	<25mA	<60mA	<0.3%
AG30P-5	0 to +3000V	0.33mA	5V	<300mA	<500mA	<0.3%
AG30P-5T	0 to +3000V	0.33mA	5V	<300mA	<500mA	<0.3%
AG40P-5	0 to +4000V	0.25mA	5V	<300mA	<500mA	<0.3%
AG40P-5T	0 to +4000V	0.25mA	5V	<300mA	<500mA	<0.3%
AG50P-5	0 to +5000V	0.20mA	5V	<300mA	<500mA	<0.3%
AG60N-5	0 to -6000V	0.16mA	5V	<300mA	<500mA	<0.3%
AG60P-5	0 to +6000V	0.16mA	5V	<300mA	<500mA	<0.3%

Notes:

-T represents extended temperature model

Models & Ratings

Model Number	Output Voltage	Output Current	Input Voltage	Input Current, No Load	Input Current, Full Load	Ripple
			1.5 Watt AGH Models			
AGH01P-12	0 to +100V	15mA	12V	<125mA	<250mA	<4%
AGH01P-24	0 to +100V	15mA	24V	<40mA	<120mA	<4%
AGH02P-5	0 to +200V	7.5mA	5V	<300mA	<550mA	<3%
AGH03N-24	0 to -300V	5mA	24V	<40mA	<120mA	<0.7%
AGH03P-5	0 to +300V	5mA	5V	<300mA	<550mA	<0.7%
AGH04P-5	0 to +400V	3.75mA	5V	<300mA	<550mA	<0.75%
AGH12N-5	0 to -1200V	1.25mA	5V	<300mA	<550mA	<0.6%
AGH12P-5	0 to +1200V	1.25mA	5V	<300mA	<550mA	<0.6%
AGH15N-5	0 to -1500V	1mA	5V	<300mA	<550mA	<0.6%
AGH15P-24	0 to +1500V	1mA	24V	<40mA	<120mA	<0.6%
AGH15P-5	0 to +1500V	1mA	5V	<300mA	<550mA	<0.6%
AGH20P-5	0 to +2000V	0.75mA	5V	<300mA	<550mA	<0.5%
AGH30N-12	0 to -3000V	0.5mA	12V	<125mA	<250mA	<0.3%
AGH30N-5	0 to -3000V	0.5mA	5V	<300mA	<550mA	<0.3%
AGH30P-12	0 to +3000V	0.5mA	12V	<125mA	<250mA	<0.3%
AGH30P-5	0 to +3000V	0.5mA	5V	<300mA	<550mA	<0.3%
AGH60P-5	0 to +6000V	0.25mA	5V	<450mA	<650mA	<0.25%

Mechanical Details

100V to 2000V

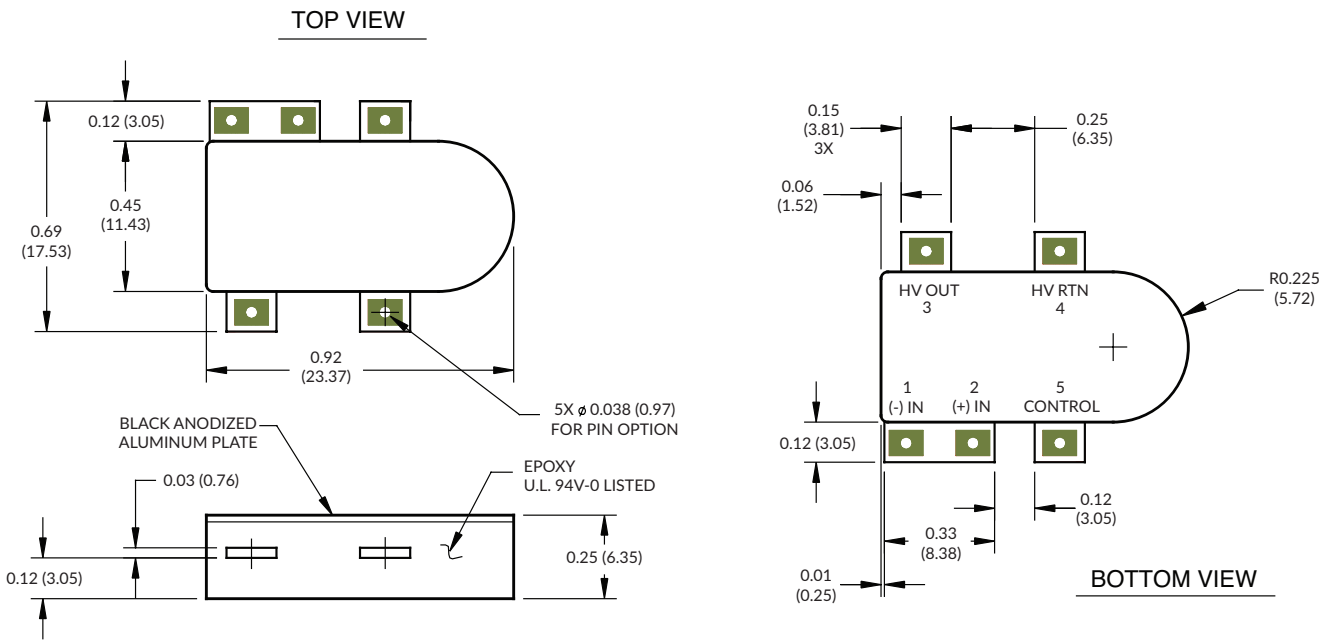

Recommended Layout

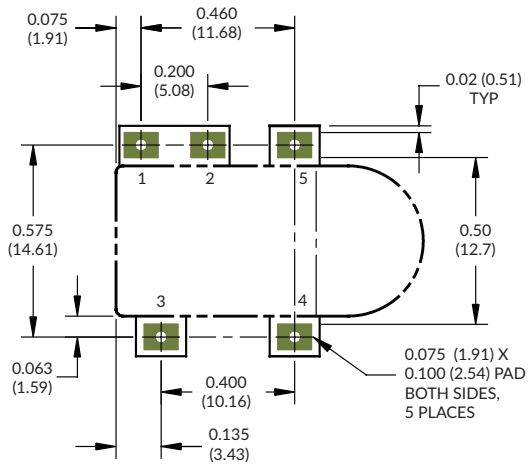

See page 3 for Pin Chart.

Notes:

1. All dimensions are in inches (mm)
2. Weight <0.2oz (5.66g)
3. Tolerance: X.XX±0.02 (0.51)
4. Pin Tolerance: ±0.005 (0.127)

Mechanical Details

3000V to 5000V

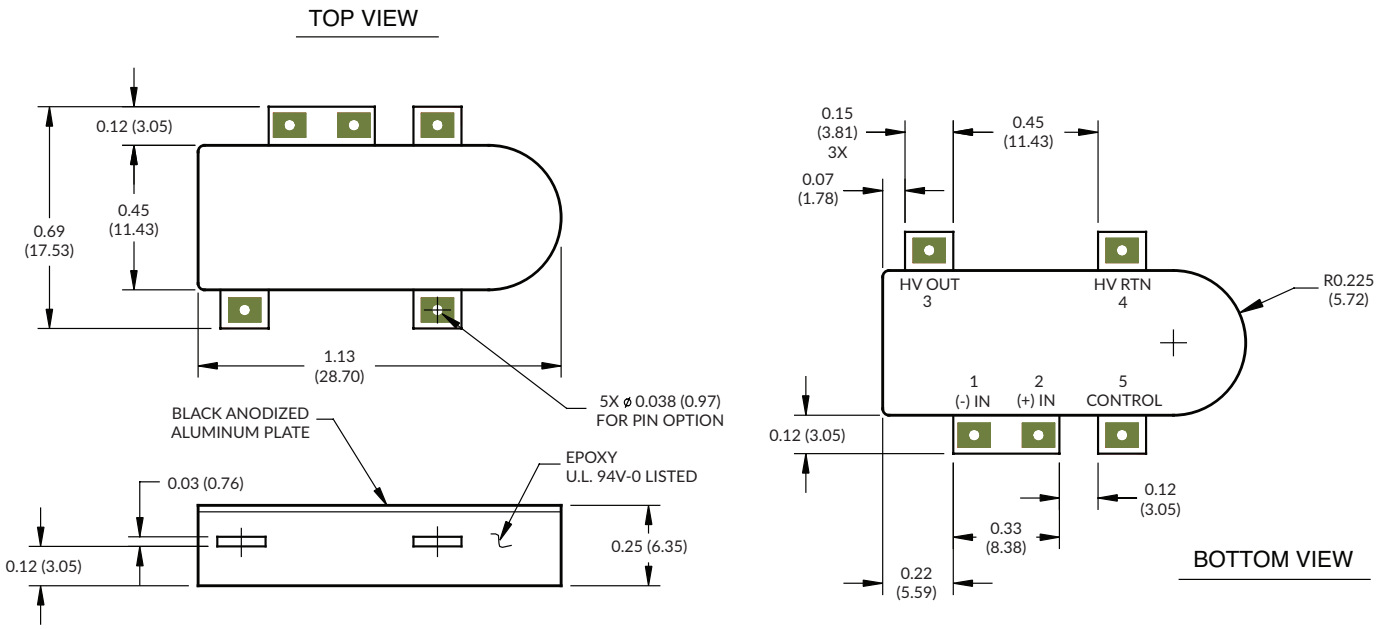

Recommended Layout

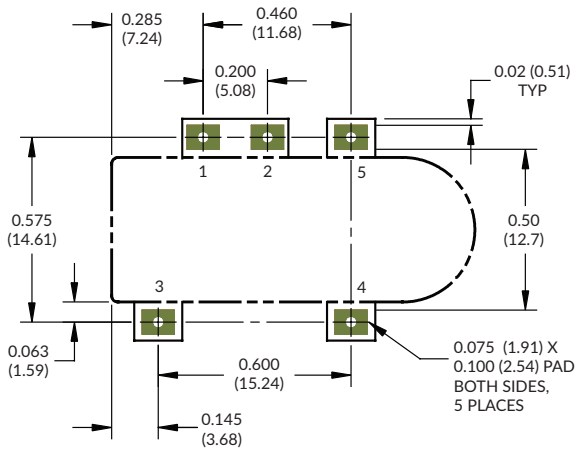

See page 3 for Pin Chart.

Notes:

1. All dimensions are in inches (mm)
2. Weight 0.25oz (7.09g)
3. Tolerance: X.XX±0.02 (0.51)
4. Pin Tolerance: ±0.005 (0.127)

Mechanical Details

6000V

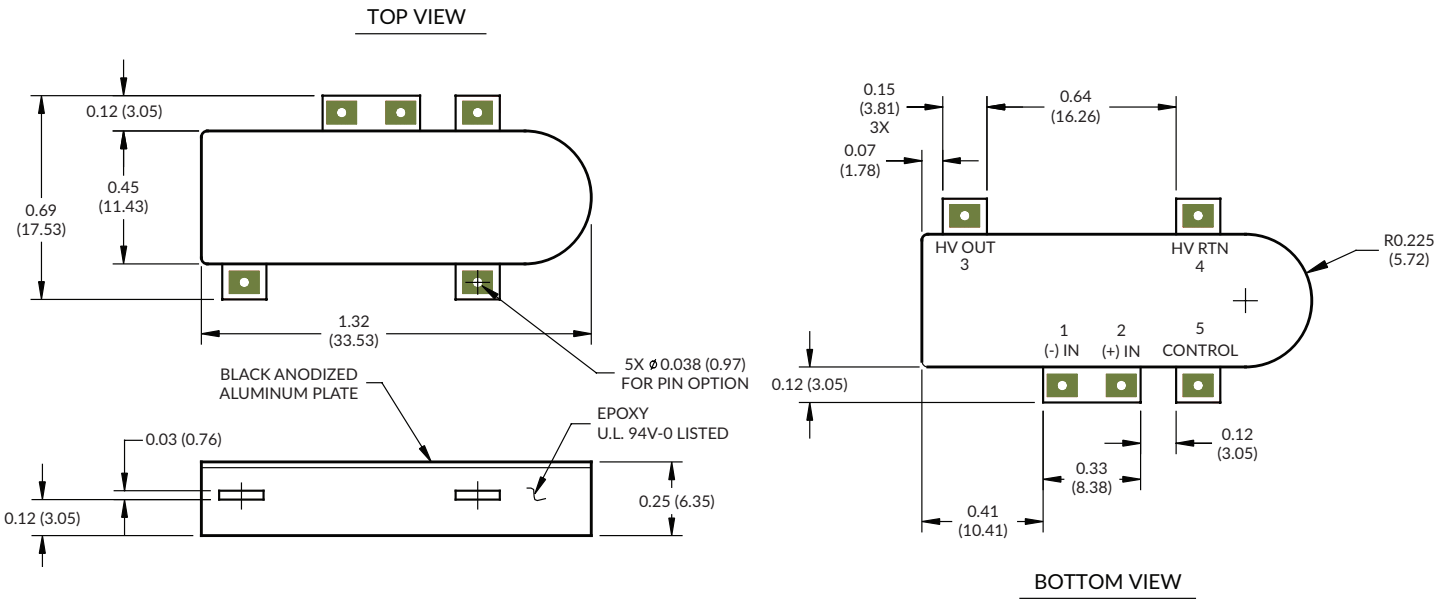

Recommended Layout

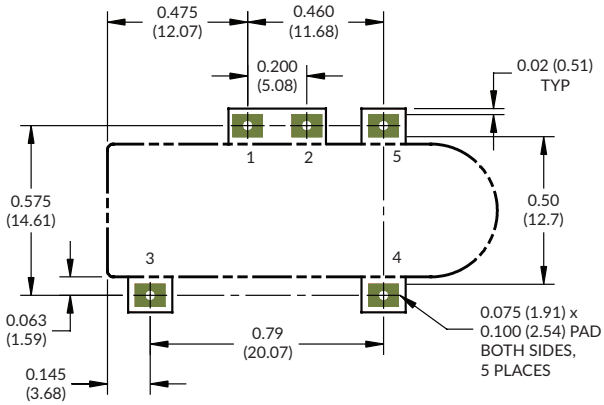

See page 3 for Pin Chart.

Notes:

1. All dimensions are in inches (mm)
2. Weight <0.3oz (8.49g)
3. Tolerance: X.XX±0.02 (0.51)
4. Pin Tolerance: ±0.005 (0.127)

AG Installation

AG mounted on top of PCB

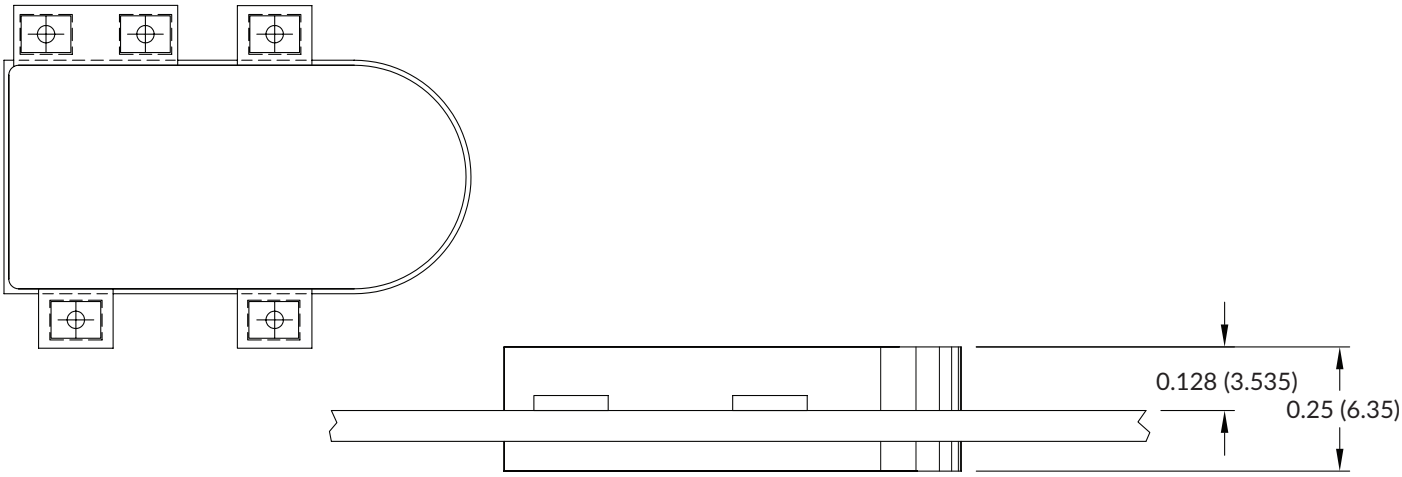

AG mounted on bottom of PCB

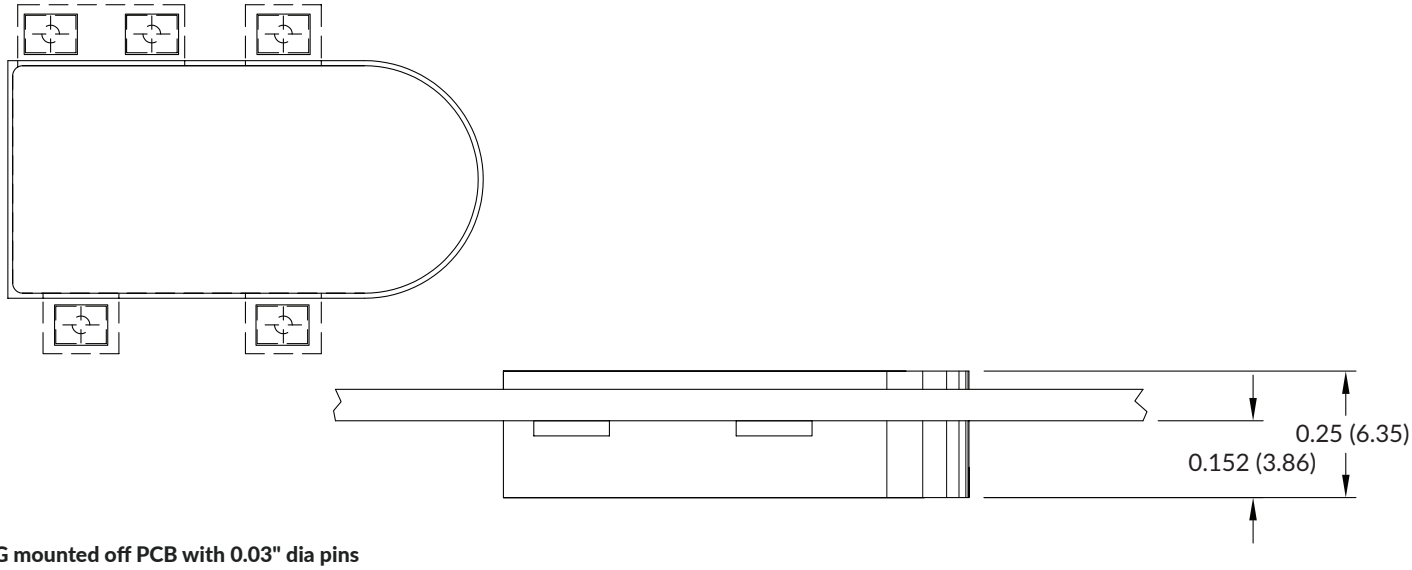

AG mounted off PCB with 0.03" dia pins

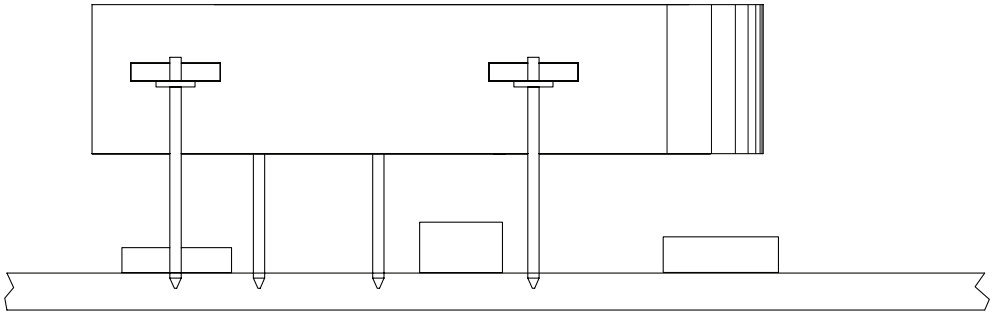

*Height of pin can vary depending upon application

Application Notes

Typical HV Output vs Control Voltage

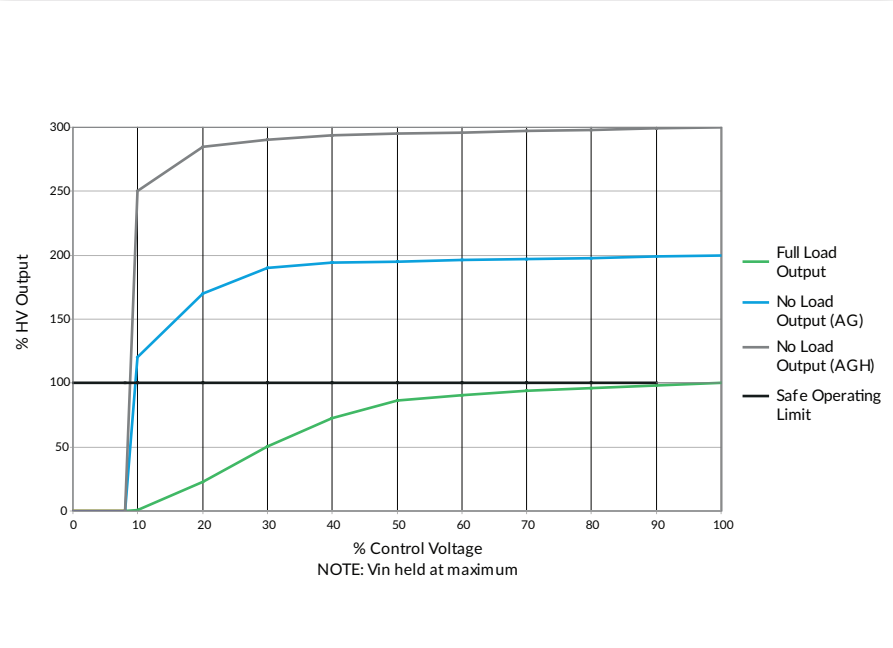
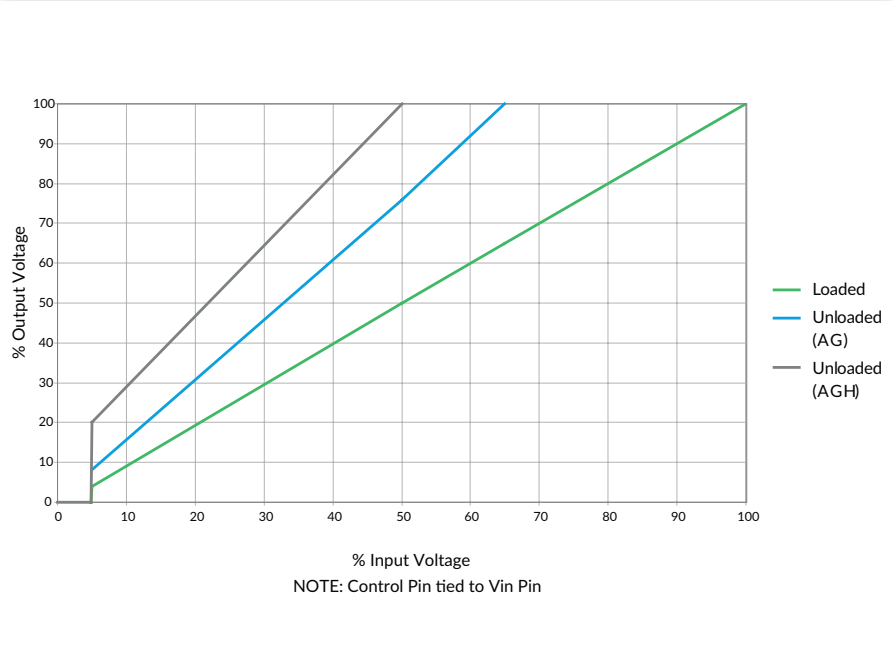
Typical Output vs Input Voltage