LUCKY LIGHT

KW2-561CGA

DATA SHEET

QC: ENG: Prepared By:

Part No.	KW2-561CGA	Spec No.	S/N-030909017D	Page	1 of 4

sales@prom-elec.com / ООО ПРОМЭЛЕКТРОНИКА

Features

- 0.56″Dual Digit Super Green
- Common Cathode (Common PIN 14 And PIN 13)
- Grey Face，White Segment

Package Dimension:

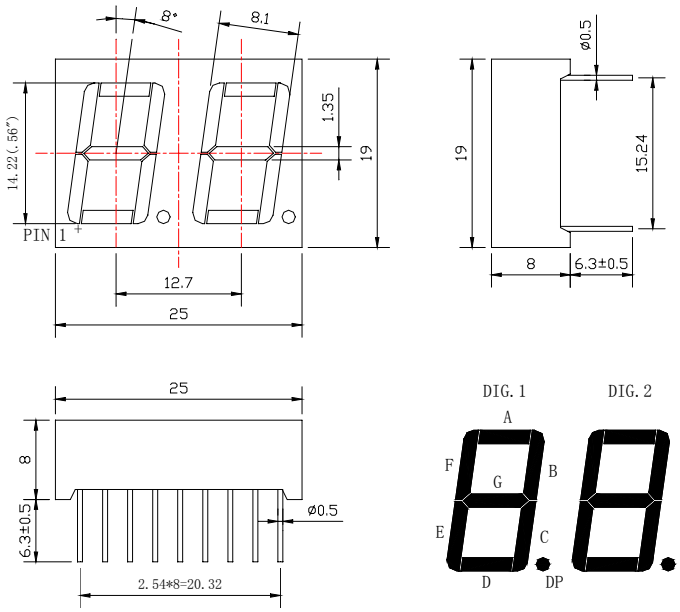

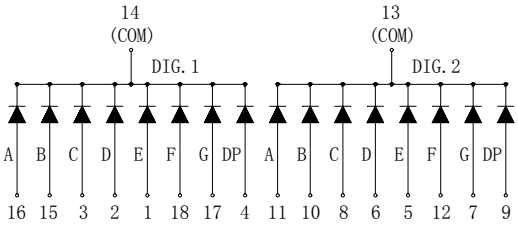

1. DIG. 1 ANODE E
2. DIG. 1 ANODE D
3. DIG. 1 ANODE C
4. DIG. 1 ANODE DP
5. DIG. 2 ANODE E
6. DIG. 2 ANODE D
7. DIG. 2 ANODE G
8. DIG. 2 ANODE C
9. DIG. 2 ANODE DP
10. DIG. 2 ANODE B
11. DIG. 2 ANODE A
12. DIG. 2 ANODE F
13. DIG. 2 COMMON CATHODE
14. DIG. 1 COMMON CATHODE
15. DIG. 1 ANODE B
16. DIG. 1 ANODE A
17. DIG. 1 ANODE G
18. DIG. 1 ANODE F

Part NO.	Face Color	Source Color
KW2-561CGA	Grey	Green

Notes:

1. All dimensions are in millimeters (inches).
2. Tolerance is ±0.25(.010”)mm unless otherwise noted.
3. Lead spacing is measured where the leads emerge from the package.
4. Specifications are subject to change without notice.

Absolute Maximum Ratings at Ta=25℃

Parameter	MAX.	Unit
Power Dissipation	100	mW
Peak Forward Current (1/10 Duty Cycle, 0.1ms Pulse Width)	100	mA
Continuous Forward Current	50	mA
Derating Linear From 50℃	0.4	mA/℃
Reverse Voltage	5	V
Operating Temperature Range	-40℃ to +80℃	
Storage Temperature Range	-40℃ to +80℃	
Lead Soldering Temperature [4mm(.157") From Body]	260℃ for 5 Seconds	

Electrical Optical Characteristics at Ta=25℃

Parameter	Symbol	Min.	Typ.	Max.	Unit	Test Condition
Luminous Intensity	Iv	2.5	3.5	---	mcd	I_F=20mA (Note 1)
Viewing Angle	$2\theta_{1/2}$	---	---	----	Deg	(Note 2)
Peak Emission Wavelength	λp	563	568	573	nm	I_F=20mA
Dominant Wavelength	λd	565	572	576	nm	I_F=20mA (Note 3)
Spectral Line Half-Width	$\triangle\lambda$	24	29	34	nm	I_F=20mA
Forward Voltage	V_F	1.7	2.2	2.8	V	I_F=20mA
Reverse Current	I_R	---	---	100	μA	V_R=5V

Note:

1. Luminous intensity is measured with a light sensor and filter combination that approximates the CIE eye-response curve.
2. $\theta_{1/2}$ is the off-axis angle at which the luminous intensity is half the axial luminous intensity.
3. The dominant wavelength (λd) is derived from the CIE chromaticity diagram and represents the single wavelength which defines the color of the device.
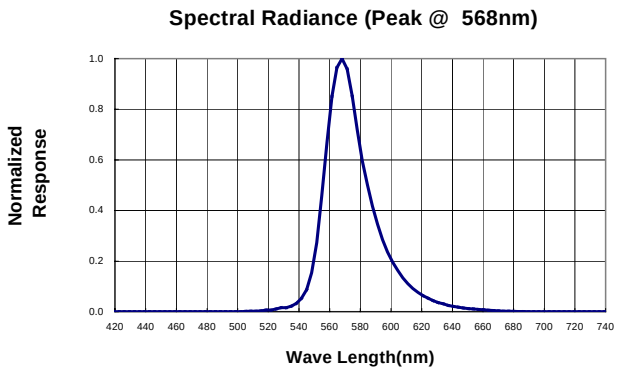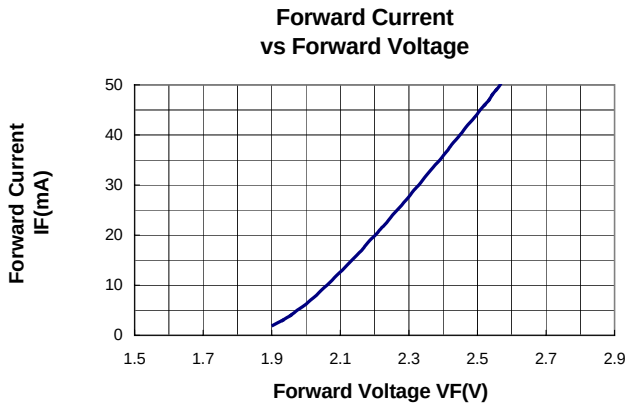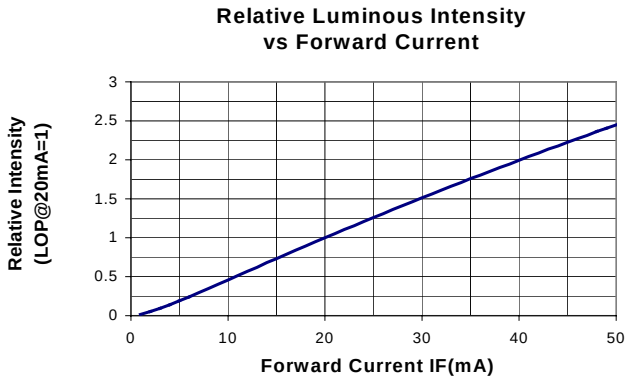
Typical Electrical / Optical Characteristics Curves
(25℃ Ambient Temperature Unless Otherwise Noted)