# AT25PE16

## 16-Mbit DataFlash-L
## Page Erase Serial Flash Memory

**ADVANCE DATASHEET**

## Features

- Single 2.3V - 3.6V supply
- Serial Peripheral Interface (SPI) compatible
  - Supports SPI modes 0 and 3
  - Supports RapidS™ operation
- Continuous read capability through entire array
  - Up to 85MHz
  - Low-power read option up to 15MHz
  - Clock-to-output time ($t_V$) of 6ns maximum
- User configurable page size
  - 512 bytes per page (default)
  - 528 bytes per page (customer selectable option)
- Two fully independent SRAM data buffers (512/528 bytes)
  - Allows receiving data while reprogramming the main memory array
- Flexible programming options
  - Byte/Page Program (1 to 512/528 bytes) directly into main memory
  - Buffer Write
  - Buffer to Main Memory Page Program
- Flexible erase options
  - Page Erase (512/528 bytes)
  - Block Erase (4KB)
  - Sector Erase (128KB)
  - Chip Erase (16-Mbits)
- 128-byte Security Register
  - 128 bytes factory programmed with a unique identifier
- Hardware and software controlled reset options
- JEDEC Standard Manufacturer and Device ID Read
- Low-power dissipation
  - 300nA Ultra-Deep Power-Down current (typical)
  - 5µA Deep Power-Down current (typical)
  - 25µA Standby current (typical at 20MHz)
  - 11mA Active Read current (typical)
- Endurance: 100,000 program/erase cycles per page minimum
- Data retention: 20 years
- Complies with full industrial temperature range
- Green (Pb/Halide-free/RoHS compliant) packaging options
  - 8-lead SOIC (0.150" wide and 0.208" wide)
  - 8-pad Ultra-thin DFN (5 x 6 x 0.6mm)



sales@prom-elec.com / ООО ПРОМЭЛЕКТРОНИКА

## Description

The Adesto® AT25PE16 is a 2.3V or 2.5V minimum, serial-interface sequential access Flash memory ideally suited for a wide variety of digital voice, image, program code, and data storage applications. The AT25PE16 also supports the RapidS serial interface for applications requiring very high speed operation. Its 17,301,504 bits of memory are organized as 4,096 pages of 512 bytes (default) or 528 bytes (customer option) each. In addition to the main memory, the AT25PE16 also contains two SRAM buffers of 512/528 bytes each. The buffers allow receiving of data while a page in the main memory is being reprogrammed. Interleaving between both buffers can dramatically increase a system's ability to write a continuous data stream. In addition, the SRAM buffers can be used as additional system scratch pad memory, and $E^2$PROM emulation (bit or byte alterability) can be easily handled with a self-contained three step read-modify-write operation.

Unlike conventional Flash memories that are accessed randomly with multiple address lines and a parallel interface, the Adesto DataFlash-L® uses a serial interface to sequentially access its data. The simple sequential access dramatically reduces active pin count, facilitates simplified hardware layout, increases system reliability, minimizes switching noise, and reduces package size. The device is optimized for use in many commercial and industrial applications where high-density, low-pin count, low-voltage, and low-power are essential.

To allow for simple in-system re-programmability, the AT25PE16 does not require high input voltages for programming. The device operates from a single 2.3V to 3.6V or 2.5V to 3.6V power supply for the erase and program and read operations. The AT25PE16 is enabled through the Chip Select pin ($\overline{CS}$) and accessed via a 3-wire interface consisting of the Serial Input (SI), Serial Output (SO), and the Serial Clock (SCK).

All programming and erase cycles are self-timed.

# 1. Pin Configurations and Pinouts

**Figure 1-1. Pinouts**

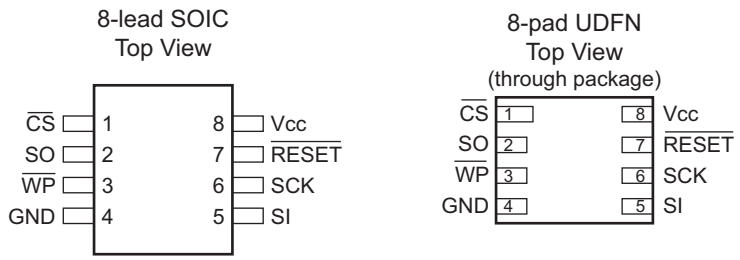


Note: 1. The metal pad on the bottom of the UDFN package is not internally connected to a voltage potential. This pad can be a “no connect” or connected to GND.

**Table 1-1. Pin Configurations**

| Symbol | Name and Function | Asserted State | Type |
|---|---|---|---|
| $\overline{CS}$ | **Chip Select:** Asserting the $\overline{CS}$ pin selects the device. When the $\overline{CS}$ pin is deasserted, the device will be deselected and normally be placed in the standby mode (not Deep Power-Down mode) and the output pin (SO) will be in a high-impedance state. When the device is deselected, data will not be accepted on the input pin (SI).<br>A high-to-low transition on the $\overline{CS}$ pin is required to start an operation and a low-to-high transition is required to end an operation. When ending an internally self-timed operation such as a program or erase cycle, the device will not enter the standby mode until the completion of the operation. | Low | Input |
| SCK | **Serial Clock:** This pin is used to provide a clock to the device and is used to control the flow of data to and from the device. Command, address, and input data present on the SI pin is always latched on the rising edge of SCK, while output data on the SO pin is always clocked out on the falling edge of SCK. | — | Input |
| SI | **Serial Input:** The SI pin is used to shift data into the device. The SI pin is used for all data input including command and address sequences. Data on the SI pin is always latched on the rising edge of SCK. Data present on the SI pin will be ignored whenever the device is deselected ($\overline{CS}$ is deasserted). | — | Input |
| SO | **Serial Output:** The SO pin is used to shift data out from the device. Data on the SO pin is always clocked out on the falling edge of SCK. The SO pin will be in a high-impedance state whenever the device is deselected ($\overline{CS}$ is deasserted). | — | Output |
| $\overline{WP}$ | **Write Protect:** When the $\overline{WP}$ pin is asserted, all sectors specified for protection by the Sector Protection Register will be protected against program and erase operations regardless of whether the Enable Sector Protection command has been issued or not. The $\overline{WP}$ pin functions independently of the software controlled protection method. After the $\overline{WP}$ pin goes low, the contents of the Sector Protection Register cannot be modified.<br>If a program or erase command is issued to the device while the $\overline{WP}$ pin is asserted, the device will simply ignore the command and perform no operation. The device will return to the idle state once the $\overline{CS}$ pin has been deasserted.<br>The $\overline{WP}$ pin is internally pulled-high and may be left floating if hardware controlled protection will not be used. However, it is recommended that the $\overline{WP}$ pin also be externally connected to $V_{CC}$ whenever possible. | Low | Input |
| RESET | **Reset:** A low state on the reset pin ($\overline{RESET}$) will terminate the operation in progress and reset the internal state machine to an idle state. The device will remain in the reset condition as long as a low level is present on the $\overline{RESET}$ pin. Normal operation can resume once the $\overline{RESET}$ pin is brought back to a high level.<br>The device incorporates an internal power-on reset circuit, so there are no restrictions on the $\overline{RESET}$ pin during power-on sequences. If this pin and feature is not utilized, then it is recommended that the $\overline{RESET}$ pin be driven high externally. | Low | Input |
| $V_{CC}$ | **Device Power Supply:** The $V_{CC}$ pin is used to supply the source voltage to the device. Operations at invalid $V_{CC}$ voltages may produce spurious results and should not be attempted. | — | Power |
| GND | **Ground:** The ground reference for the power supply. GND should be connected to the system ground. | — | Ground |

# 2. Block Diagram

**Figure 2-1. Block Diagram**

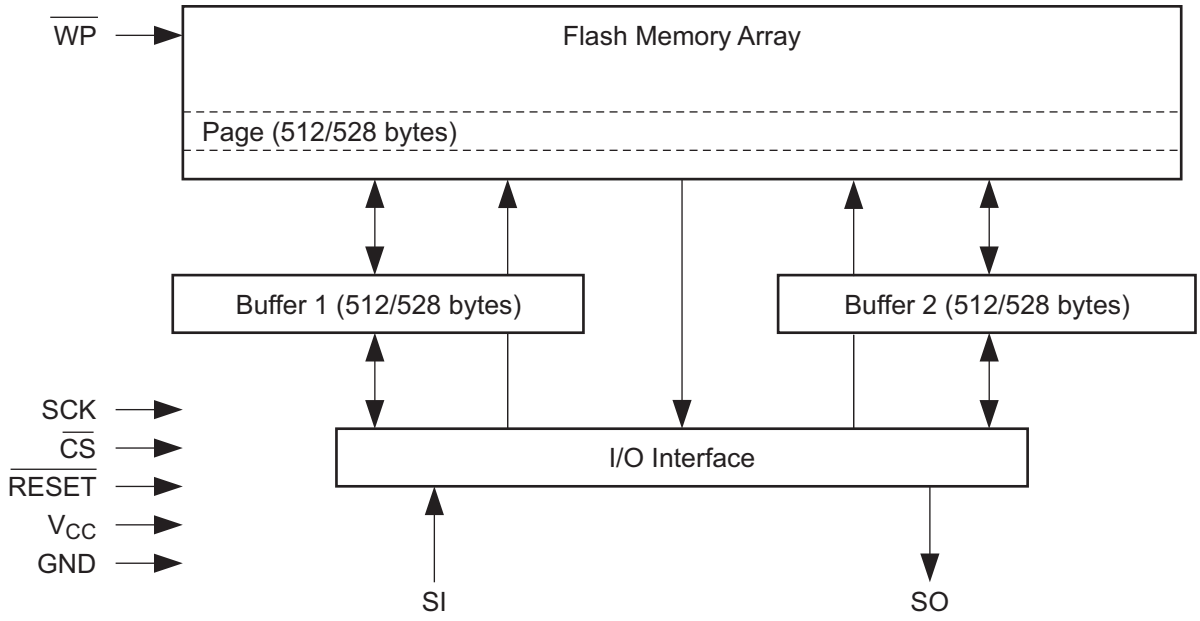

# 3. Memory Array

To provide optimal flexibility, the AT25PE16 memory array is divided into three levels of granularity comprising of sectors, blocks, and pages. Figure 3-1, Memory Architecture Diagram illustrates the breakdown of each level and details the number of pages per sector and block. Program operations to the DataFlash-L can be done at the full page level or at the byte level (a variable number of bytes). The erase operations can be performed at the chip, sector, block, or page level.

**Figure 3-1. Memory Architecture Diagram**

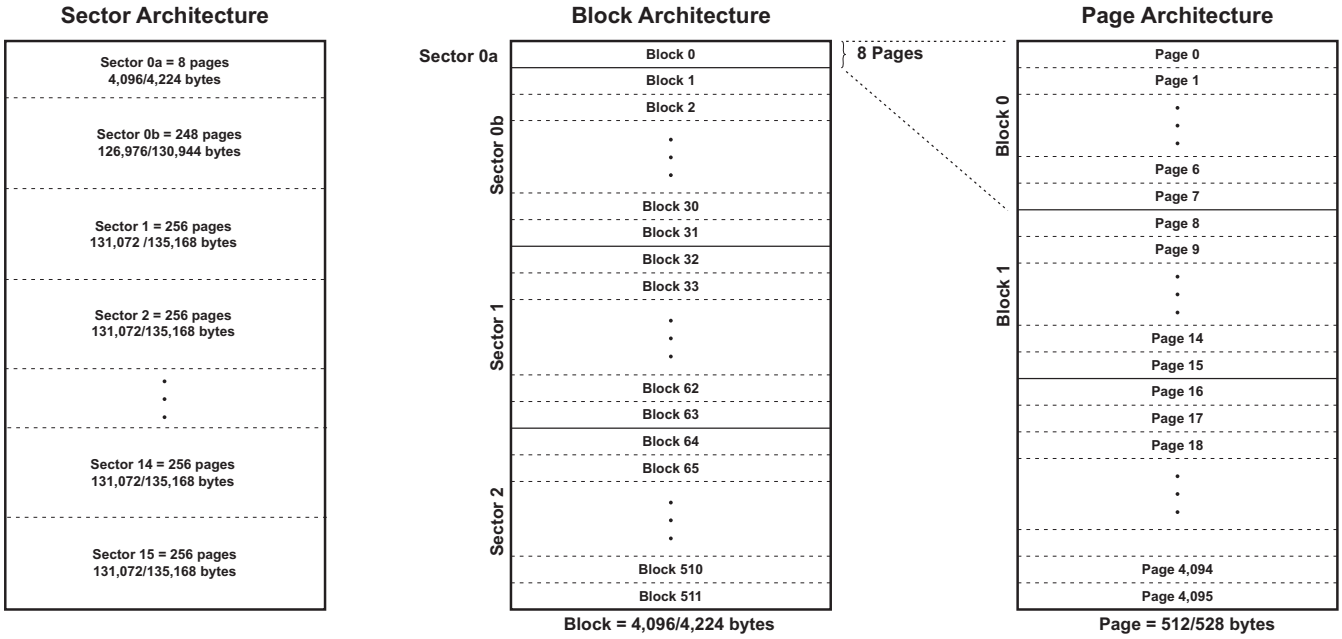

# 4. Device Operation

The device operation is controlled by instructions from the host processor. The list of instructions and their associated opcodes are contained in Table 15-1 on page 34 through Table 15-4 on page 35. A valid instruction starts with the falling edge of $\overline{CS}$ followed by the appropriate 8-bit opcode and the desired buffer or main memory address location. While the $\overline{CS}$ pin is low, toggling the SCK pin controls the loading of the opcode and the desired buffer or main memory address location through the SI (Serial Input) pin. All instructions, addresses, and data are transferred with the Most Significant Bit (MSB) first.

Three address bytes are used to address memory locations in either the main memory array or in one of the SRAM buffers. The three address bytes will be comprised of a number of dummy bits and a number of actual device address bits, with the number of dummy bits varying depending on the operation being performed and the selected device page size. Buffer addressing for the optional DataFlash-L page size (528 bytes) is referenced in the datasheet using the terminology BFA9 - BFA0 to denote the 10 address bits required to designate a byte address within a buffer. The main memory addressing is referenced using the terminology PA11 - PA0 and BA9 - BA0, where PA11 - PA0 denotes the 12 address bits required to designate a page address, and BA9 - BA0 denotes the 10 address bits required to designate a byte address within the page. Therefore, when using the optional DataFlash-L page size, a total of 22 address bits are used.

For the default page size (512 Bytes), the buffer addressing is referenced in the datasheet using the conventional terminology BFA8 - BFA0 to denote the nine address bits required to designate a byte address within a buffer. Main memory addressing is referenced using the terminology A20 - A0, where A20 - A9 denotes the 12 address bits required to designate a page address, and A8 - A0 denotes the nine address bits required to designate a byte address within a page. Therefore, when using the default page size, a total of 21 address bits are used.

# 5. Read Commands

By specifying the appropriate opcode, data can be read from the main memory or from either one of the two SRAM data buffers. The DataFlash-L supports RapidS protocols for Mode 0 and Mode 3. Please see Section 25., Detailed Bit-level Read Waveforms: RapidS Mode 0/Mode 3 diagrams in this datasheet for details on the clock cycle sequences for each mode.

## 5.1 Continuous Array Read (Legacy Command: E8h Opcode)

By supplying an initial starting address for the main memory array, the Continuous Array Read command can be utilized to sequentially read a continuous stream of data from the device by simply providing a clock signal; no additional addressing information or control signals need to be provided. The DataFlash-L incorporates an internal address counter that will automatically increment on every clock cycle, allowing one continuous read from memory to be performed without the need for additional address sequences. To perform a Continuous Array Read using the optional DataFlash-L page size (528 bytes), an opcode of E8h must be clocked into the device followed by three address bytes (which comprise the 22-bit page and byte address sequence) and four dummy bytes. The first 12 bits (PA11 - PA0) of the 22-bit address sequence specify which page of the main memory array to read and the last 10 bits (BA9 - BA0) of the 22-bit address sequence specify the starting byte address within the page. To perform a Continuous Array Read using the default page size (512 bytes), an opcode of E8h must be clocked into the device followed by three address bytes and four dummy bytes. The first 12 bits (A20 - A9) of the 21-bit address sequence specify which page of the main memory array to read and the last nine bits (A8 - A0) of the 21-bit address sequence specify the starting byte address within the page. The dummy bytes that follow the address bytes are needed to initialize the read operation. Following the dummy bytes, additional clock pulses on the SCK pin will result in data being output on the SO (serial output) pin.

The $\overline{CS}$ pin must remain low during the loading of the opcode, the address bytes, the dummy bytes, and the reading of data. When the end of a page in the main memory is reached during a Continuous Array Read, the device will continue reading at the beginning of the next page with no delays incurred during the page boundary crossover (the crossover from the end of one page to the beginning of the next page). When the last bit in the main memory array has been read, the device will continue reading back at the beginning of the first page of memory. As with crossing over page boundaries, no delays will be incurred when wrapping around from the end of the array to the beginning of the array.

A low-to-high transition on the $\overline{CS}$ pin will terminate the read operation and tri-state the output pin (SO). The maximum SCK frequency allowable for the Continuous Array Read is defined by the $f_{CAR1}$ specification. The Continuous Array Read bypasses the data buffers and leaves the contents of the buffers unchanged.

**Warning:** This command is not recommended for new designs.

## 5.2 Continuous Array Read (High Frequency Mode: 1Bh Opcode)

This command can be used to read the main memory array sequentially at the highest possible operating clock frequency up to the maximum specified by $f_{CAR4}$. To perform a Continuous Array Read using the optional DataFlash-L page size (528 bytes), the $\overline{CS}$ pin must first be asserted, and then an opcode of 1Bh must be clocked into the device followed by three address bytes and two dummy bytes. The first 12 bits (PA11 - PA0) of the 22-bit address sequence specify which page of the main memory array to read and the last 10 bits (BA9 - BA0) of the 22-bit address sequence specify the starting byte address within the page. To perform a Continuous Array Read using the default page size (512 bytes), the opcode 1Bh must be clocked into the device followed by three address bytes (A20 - A0) and two dummy bytes. Following the dummy bytes, additional clock pulses on the SCK pin will result in data being output on the SO (Serial Output) pin.

The $\overline{CS}$ pin must remain low during the loading of the opcode, the address bytes, the dummy bytes, and the reading of data. When the end of a page in the main memory is reached during a Continuous Array Read, the device will continue reading at the beginning of the next page with no delays incurred during the page boundary crossover (the crossover from the end of one page to the beginning of the next page). When the last bit in the main memory array has been read, the device will continue reading back at the beginning of the first page of memory. As with crossing over page boundaries, no delays will be incurred when wrapping around from the end of the array to the beginning of the array.

A low-to-high transition on the $\overline{CS}$ pin will terminate the read operation and tri-state the output pin (SO). The maximum SCK frequency allowable for the Continuous Array Read is defined by the $f_{CAR1}$ specification. The Continuous Array Read bypasses both data buffers and leaves the contents of the buffers unchanged.

## 5.3 Continuous Array Read (High Frequency Mode: 0Bh Opcode)

This command can be used to read the main memory array sequentially at higher clock frequencies up to the maximum specified by $f_{CAR1}$. To perform a Continuous Array Read using the optional DataFlash-L page size (528 bytes), the $\overline{CS}$ pin must first be asserted, and then an opcode of 0Bh must be clocked into the device followed by three address bytes and one dummy byte. The first 12 bits (PA11 - PA0) of the 22-bit address sequence specify which page of the main memory array to read and the last 10 bits (BA9 - BA0) of the 22-bit address sequence specify the starting byte address within the page. To perform a Continuous Array Read using the default page size (512 bytes), the opcode 0Bh must be clocked into the device followed by three address bytes (A20 - A0) and one dummy byte. Following the dummy byte, additional clock pulses on the SCK pin will result in data being output on the SO pin.

The $\overline{CS}$ pin must remain low during the loading of the opcode, the address bytes, the dummy byte, and the reading of data. When the end of a page in the main memory is reached during a Continuous Array Read, the device will continue reading at the beginning of the next page with no delays incurred during the page boundary crossover (the crossover from the end of one page to the beginning of the next page). When the last bit in the main memory array has been read, the device will continue reading back at the beginning of the first page of memory. As with crossing over page boundaries, no delays will be incurred when wrapping around from the end of the array to the beginning of the array.

A low-to-high transition on the $\overline{CS}$ pin will terminate the read operation and tri-state the output pin (SO). The maximum SCK frequency allowable for the Continuous Array Read is defined by the $f_{CAR1}$ specification. The Continuous Array Read bypasses both data buffers and leaves the contents of the buffers unchanged.

## 5.4 Continuous Array Read (Low Frequency Mode: 03h Opcode)

This command can be used to read the main memory array sequentially at lower clock frequencies up to maximum specified by $f_{CAR2}$. Unlike the previously described read commands, this Continuous Array Read command for the lower clock frequencies does not require the clocking in of dummy bytes after the address byte sequence. To perform a Continuous Array Read using the optional DataFlash-L page size (528 bytes), the $\overline{CS}$ pin must first be asserted, and then an opcode of 03h must be clocked into the device followed by three address bytes. The first 12 bits (PA11 - PA0) of the 22-bit address sequence specify which page of the main memory array to read and the last 10 bits (BA9 - BA0) of the 22-bit address sequence specify the starting byte address within the page. To perform a Continuous Array Read using the default page size (512 bytes), the opcode 03h must be clocked into the device followed by three address bytes (A20 - A0). Following the address bytes, additional clock pulses on the SCK pin will result in data being output on the SO pin.

The $\overline{CS}$ pin must remain low during the loading of the opcode, the address bytes, and the reading of data. When the end of a page in the main memory is reached during a Continuous Array Read, the device will continue reading at the beginning of the next page with no delays incurred during the page boundary crossover (the crossover from the end of one page to the beginning of the next page). When the last bit in the main memory array has been read, the device will continue reading back at the beginning of the first page of memory. As with crossing over page boundaries, no delays will be incurred when wrapping around from the end of the array to the beginning of the array.

A low-to-high transition on the $\overline{CS}$ pin will terminate the read operation and tri-state the output pin (SO). The maximum SCK frequency allowable for the Continuous Array Read is defined by the $f_{CAR2}$ specification. The Continuous Array Read bypasses both data buffers and leaves the contents of the buffers unchanged.

## 5.5 Continuous Array Read (Low Power Mode: 01h Opcode)

This command is ideal for applications that want to minimize power consumption and do not need to read the memory array at high frequencies. Like the 03h opcode, this Continuous Array Read command allows reading the main memory array sequentially without the need for dummy bytes to be clocked in after the address byte sequence. The memory can be read at clock frequencies up to maximum specified by $f_{CAR3}$. To perform a Continuous Array Read using the optional DataFlash-L page size (528 bytes), the $\overline{CS}$ pin must first be asserted, and then an opcode of 01h must be clocked into the device followed by three address bytes. The first 12 bits (PA11 - PA0) of the 22-bit address sequence specify which

page of the main memory array to read and the last 10 bits (BA9 - BA0) of the 22-bit address sequence specify the starting byte address within the page. To perform a Continuous Array Read using the default page size (512 bytes), the opcode 01h must be clocked into the device followed by three address bytes (A20 - A0). Following the address bytes, additional clock pulses on the SCK pin will result in data being output on the SO pin.

The $\overline{CS}$ pin must remain low during the loading of the opcode, the address bytes, and the reading of data. When the end of a page in the main memory is reached during a Continuous Array Read, the device will continue reading at the beginning of the next page with no delays incurred during the page boundary crossover (the crossover from the end of one page to the beginning of the next page). When the last bit in the main memory array has been read, the device will continue reading back at the beginning of the first page of memory. As with crossing over page boundaries, no delays will be incurred when wrapping around from the end of the array to the beginning of the array.

A low-to-high transition on the $\overline{CS}$ pin will terminate the read operation and tri-state the output pin (SO). The maximum SCK frequency allowable for the Continuous Array Read is defined by the $f_{CAR3}$ specification. The Continuous Array Read bypasses both data buffers and leaves the contents of the buffers unchanged.

## 5.6 Main Memory Page Read

A Main Memory Page Read allows the reading of data directly from a single page in the main memory, bypassing both of the data buffers and leaving the contents of the buffers unchanged. To start a page read using the optional DataFlash-L page size (528 bytes), an opcode of D2h must be clocked into the device followed by three address bytes (which comprise the 22-bit page and byte address sequence) and four dummy bytes. The first 12 bits (PA11 - PA0) of the 22-bit address sequence specify the page in main memory to be read and the last 10 bits (BA9 - BA0) of the 22-bit address sequence specify the starting byte address within that page. To start a page read using the default page size (512 bytes), the opcode D2h must be clocked into the device followed by three address bytes and four dummy bytes. The first 12 bits (A20 - A9) of the 21-bit address sequence specify which page of the main memory array to read, and the last nine bits (A8 - A0) of the 21-bit address sequence specify the starting byte address within that page. The dummy bytes that follow the address bytes are sent to initialize the read operation. Following the dummy bytes, the additional pulses on SCK result in data being output on the SO (serial output) pin.

The $\overline{CS}$ pin must remain low during the loading of the opcode, the address bytes, the dummy bytes, and the reading of data. Unlike the Continuous Array Read command, when the end of a page in main memory is reached, the device will continue reading back at the beginning of the same page rather than the beginning of the next page.

A low-to-high transition on the $\overline{CS}$ pin will terminate the read operation and tri-state the output pin (SO). The maximum SCK frequency allowable for the Main Memory Page Read is defined by the $f_{SCK}$ specification. The Main Memory Page Read bypasses both data buffers and leaves the contents of the buffers unchanged.

## 5.7 Buffer Read

The SRAM data buffers can be accessed independently from the main memory array, and utilizing the Buffer Read command allows data to be sequentially read directly from either one of the buffers. Four opcodes, D4h or D1h for Buffer 1 and D6h or D3h for Buffer 2, can be used for the Buffer Read command. The use of each opcode depends on the maximum SCK frequency that will be used to read data from the buffers. The D4h and D6h opcode can be used at any SCK frequency up to the maximum specified by $f_{CAR1}$ while the D1h and D3h opcode can be used for lower frequency read operations up to the maximum specified by $f_{CAR2}$.

To perform a Buffer Read using the standard DataFlash-L buffer size (528 bytes), the opcode must be clocked into the device followed by three address bytes comprised of 14 dummy bits and 10 buffer address bits (BFA9 - BFA0). To perform a Buffer Read using the default buffer size (512 bytes), the opcode must be clocked into the device followed by three address bytes comprised of 15 dummy bits and nine buffer address bits (BFA8 - BFA0). Following the address bytes, one dummy byte must be clocked into the device to initialize the read operation if using opcodes D4h or D6h. The $\overline{CS}$ pin must remain low during the loading of the opcode, the address bytes, the dummy byte (if using opcodes D4h or D6h), and the reading of data. When the end of a buffer is reached, the device will continue reading back at the beginning of the buffer. A low-to-high transition on the $\overline{CS}$ pin will terminate the read operation and tri-state the output pin (SO).

# 6. Program and Erase Commands

## 6.1 Buffer Write

Utilizing the Buffer Write command allows data clocked in from the SI pin to be written directly into either one of the SRAM data buffers.

To load data into a buffer using the standard DataFlash-L buffer size (528 bytes), an opcode of 84h for Buffer 1 or 87h for Buffer 2 must be clocked into the device followed by three address bytes comprised of 14 dummy bits and 10 buffer address bits (BFA9 - BFA0). The 10 buffer address bits specify the first byte in the buffer to be written.

To load data into a buffer using the default buffer size (512 bytes), an opcode of 84h for Buffer 1 or 87h for Buffer 2, must be clocked into the device followed by 15 dummy bits and nine buffer address bits (BFA8 - BFA0). The nine buffer address bits specify the first byte in the buffer to be written.

After the last address byte has been clocked into the device, data can then be clocked in on subsequent clock cycles. If the end of the data buffer is reached, the device will wrap around back to the beginning of the buffer. Data will continue to be loaded into the buffer until a low-to-high transition is detected on the $\overline{CS}$ pin.

## 6.2 Buffer to Main Memory Page Program with Built-In Erase

The Buffer to Main Memory Page Program with Built-In Erase command allows data that is stored in one of the SRAM buffers to be written into an erased or programmed page in the main memory array. It is not necessary to pre-erase the page in main memory to be written because this command will automatically erase the selected page prior to the program cycle.

To perform a Buffer to Main Memory Page Program with Built-In Erase using the optional DataFlash-L page size (528 bytes), an opcode of 83h for Buffer 1 or 86h for Buffer 2 must be clocked into the device followed by three address bytes comprised of two dummy bits, 12 page address bits (PA11 - PA0) that specify the page in the main memory to be written, and 10 dummy bits.

To perform a Buffer to Main Memory Page Program with Built-In Erase using the default page size (512 bytes), an opcode of 83h for Buffer 1 or 86h for Buffer 2 must be clocked into the device followed by three address bytes comprised of three dummy bits, 12 page address bits (A20 - A9) that specify the page in the main memory to be written, and nine dummy bits.

When a low-to-high transition occurs on the $\overline{CS}$ pin, the device will first erase the selected page in main memory (the erased state is a Logic 1) and then program the data stored in the appropriate buffer into that same page in main memory. Both the erasing and the programming of the page are internally self-timed and should take place in a maximum time of $t_{EP}$. During this time, the RDY/$\overline{BUSY}$ bit in the Status Register will indicate that the device is busy.

The device also incorporates an intelligent erase and program algorithm that can detect when a byte location fails to erase or program properly. If an erase or programming error arises, it will be indicated by the EPE bit in the Status Register.

## 6.3 Buffer to Main Memory Page Program without Built-In Erase

The Buffer to Main Memory Page Program without Built-In Erase command allows data that is stored in one of the SRAM buffers to be written into a pre-erased page in the main memory array. It is necessary that the page in main memory to be written be previously erased in order to avoid programming errors.

To perform a Buffer to Main Memory Page Program without Built-In Erase using the optional DataFlash-L page size (528 bytes), an opcode of 88h for Buffer 1 or 89h for Buffer 2 must be clocked into the device followed by three address bytes comprised of two dummy bits, 12 page address bits (PA11 - PA0) that specify the page in the main memory to be written, and 10 dummy bits.

To perform a Buffer to Main Memory Page Program using the default page size (512 bytes), an opcode of 88h for Buffer 1 or 89h for Buffer 2 must be clocked into the device followed by three address bytes comprised of three dummy bits, 12 page address bits (A20 - A9) that specify the page in the main memory to be written, and nine dummy bits.

When a low-to-high transition occurs on the $\overline{CS}$ pin, the device will program the data stored in the appropriate buffer into the specified page in the main memory. The page in main memory that is being programmed must have been previously erased using one of the erase commands (Page Erase, Block Erase, Sector Erase, or Chip Erase). The programming of the page is internally self-timed and should take place in a maximum time of $t_P$. During this time, the RDY/$\overline{BUSY}$ bit in the Status Register will indicate that the device is busy.

The device also incorporates an intelligent programming algorithm that can detect when a byte location fails to program properly. If a programming error arises, it will be indicated by the EPE bit in the Status Register.

## 6.4 Main Memory Page Program through Buffer with Built-In Erase

The Main Memory Page Program through Buffer with Built-In Erase command combines the Buffer Write and Buffer to Main Memory Page Program with Built-In Erase operations into a single operation to help simplify application firmware development. With the Main Memory Page Program through Buffer with Built-In Erase command, data is first clocked into either Buffer 1 or Buffer 2, the addressed page in memory is then automatically erased, and then the contents of the appropriate buffer are programmed into the just-erased main memory page.

To perform a Main Memory Page Program through Buffer using the optional DataFlash-L page size (528 bytes), an opcode of 82h for Buffer 1 or 85h for Buffer 2 must first be clocked into the device followed by three address bytes comprised of two dummy bits, 12 page address bits (PA11 - PA0) that specify the page in the main memory to be written, and 10 buffer address bits (BFA9 - BFA0) that select the first byte in the buffer to be written.

To perform a Main Memory Page Program through Buffer using the default page size (512 bytes), an opcode of 82h for Buffer 1 or 85h for Buffer 2 must first be clocked into the device followed by three address bytes comprised of three dummy bits, 12 page address bits (A20 - A9) that specify the page in the main memory to be written, and nine buffer address bits (BFA8 - BFA0) that select the first byte in the buffer to be written.

After all address bytes have been clocked in, the device will take data from the input pin (SI) and store it in the specified data buffer. If the end of the buffer is reached, the device will wrap around back to the beginning of the buffer. When there is a low-to-high transition on the $\overline{CS}$ pin, the device will first erase the selected page in main memory (the erased state is a Logic 1) and then program the data stored in the buffer into that main memory page. Both the erasing and the programming of the page are internally self-timed and should take place in a maximum time of $t_{EP}$. During this time, the RDY/$\overline{BUSY}$ bit in the Status Register will indicate that the device is busy.

The device also incorporates an intelligent erase and programming algorithm that can detect when a byte location fails to erase or program properly. If an erase or program error arises, it will be indicated by the EPE bit in the Status Register.

## 6.5 Main Memory Byte/Page Program through Buffer 1 without Built-In Erase

The Main Memory Byte/Page Program through Buffer 1 without Built-In Erase command combines both the Buffer Write and Buffer to Main Memory Program without Built-In Erase operations to allow any number of bytes (1 to 512/528 bytes) to be programmed directly into previously erased locations in the main memory array. With the Main Memory Byte/Page Program through Buffer 1 without Built-In Erase command, data is first clocked into Buffer 1, and then only the bytes clocked into the buffer are programmed into the pre-erased byte locations in main memory. Multiple bytes up to the page size can be entered with one command sequence.

To perform a Main Memory Byte/Page Program through Buffer 1 using the optional DataFlash-L page size (528 bytes), an opcode of 02h must first be clocked into the device followed by three address bytes comprised of two dummy bits, 12 page address bits (PA11 - PA0) that specify the page in the main memory to be written, and 10 buffer address bits (BFA9 - BFA0) that select the first byte in the buffer to be written. After all address bytes are clocked in, the device will take data from the input pin (SI) and store it in Buffer 1. Any number of bytes (1 to 528) can be entered. If the end of the buffer is reached, then the device will wrap around back to the beginning of the buffer.

To perform a Main Memory Byte/Page Program through Buffer 1 using the default page size (512 bytes), an opcode of 02h for Buffer 1 using must first be clocked into the device followed by three address bytes comprised of three dummy bits, 12 page address bits (A20 - A9) that specify the page in the main memory to be written, and nine buffer address bits (BFA8 - BFA0) that selects the first byte in the buffer to be written. After all address bytes are clocked in, the device will take data from the input pin (SI) and store it in Buffer 1. Any number of bytes (1 to 512) can be entered. If the end of the

buffer is reached, then the device will wrap around back to the beginning of the buffer. When using the default page size, the page and buffer address bits correspond to a 21-bit logical address (A20-A0) in the main memory.

After all data bytes have been clocked into the device, a low-to-high transition on the $\overline{CS}$ pin will start the program operation in which the device will program the data stored in Buffer 1 into the main memory array. Only the data bytes that were clocked into the device will be programmed into the main memory.

**Example:** If only two data bytes were clocked into the device, then only two bytes will be programmed into main memory and the remaining bytes in the memory page will remain in their previous state.

The $\overline{CS}$ pin must be deasserted on a byte boundary (multiples of eight bits); otherwise, the operation will be aborted and no data will be programmed. The programming of the data bytes is internally self-timed and should take place in a maximum time of $t_P$ (the program time will be a multiple of the $t_{BP}$ time depending on the number of bytes being programmed). During this time, the RDY/$\overline{BUSY}$ bit in the Status Register will indicate that the device is busy.

The device also incorporates an intelligent programming algorithm that can detect when a byte location fails to program properly. If a programming error arises, it will be indicated by the EPE bit in the Status Register.

## 6.6 Read-Modify-Write

A completely self-contained read-modify-write operation can be performed to reprogram any number of sequential bytes in a page in the main memory array without affecting the rest of the bytes in the same page. This command allows the device to easily emulate an EEPROM by providing a method to modify a single byte or more in the main memory in a single operation, without the need for pre-erasing the memory or the need for any external RAM buffers. The Read-Modify-Write command is essentially a combination of the Main Memory Page to Buffer Transfer, Buffer Write, and Buffer to Main Memory Page Program with Built-in Erase commands.

To perform a Read-Modify-Write using the optional DataFlash-L page size (528 bytes), an opcode of 58h for Buffer 1 or 59h for Buffer 2 must be clocked into the device followed by three address bytes comprised of 2 dummy bits, 12 page address bits (PA11 - PA0) that specify the page in the main memory to be written, and 10 byte address bits (BA9 - BA0) that designate the starting byte address within the page to reprogram.

To perform a Read-Modify-Write using the default page size (512 bytes), an opcode of 58h for Buffer 1 or 59h for Buffer 2 must be clocked into the device followed by three address bytes comprised of 3 dummy bits, 12 page address bits (A20 - A9) that specify the page in the main memory to be written, and 9 byte address bits (A8 - A0) designate the starting byte address within the page to reprogram.

After the address bytes have been clocked in, any number of sequential data bytes from one to 512/528 bytes can be clocked into the device. If the end of the buffer is reached when clocking in the data, then the device will wrap around back to the beginning of the buffer. After all data bytes have been clocked into the device, a low-to-high transition on the CS pin will start the self-contained, internal read-modify-write operation. Only the data bytes that were clocked into the device will be reprogrammed in the main memory.

**Example:** If only one data byte was clocked into the device, then only one byte in main memory will be reprogrammed and the remaining bytes in the main memory page will remain in their previous state.

The $\overline{CS}$ pin must be deasserted on a byte boundary (multiples of 8 bits); otherwise, the operation will be aborted and no data will be programmed. The reprogramming of the data bytes is internally self-timed and should take place in a maximum time of $t_P$. During this time, the RDY/$\overline{BUSY}$ bit in the Status Register will indicate that the device is busy.

The device also incorporates an intelligent erase and programming algorithm that can detect when a byte location fails to erase or program properly. If an erase or program error arises, it will be indicated by the EPE bit in the Status Register.

The Read-Modify-Write command uses the same opcodes as the Auto Page Rewrite command. If no data bytes are clocked into the device, then the device will perform an Auto Page Rewrite operation. See the Auto Page Rewrite command description on page 26 for more details.

## 6.7 Page Erase

The Page Erase command can be used to individually erase any page in the main memory array allowing the Buffer to Main Memory Page Program without Built-In Erase command or the Main Memory Byte/Page Program through Buffer 1 command to be utilized at a later time.

To perform a Page Erase with the optional DataFlash-L page size (528 bytes), an opcode of 81h must be clocked into the device followed by three address bytes comprised of two dummy bits, 12 page address bits (PA11 - PA0) that specify the page in the main memory to be erased, and 10 dummy bits.

To perform a Page Erase with the default page size (512 bytes), an opcode of 81h must be clocked into the device followed by three address bytes comprised of three dummy bits, 12 page address bits (A20 - A9) that specify the page in the main memory to be erased, and nine dummy bits.

When a low-to-high transition occurs on the $\overline{CS}$ pin, the device will erase the selected page (the erased state is a Logic 1). The erase operation is internally self-timed and should take place in a maximum time of $t_{PE}$. During this time, the RDY/$\overline{BUSY}$ bit in the Status Register will indicate that the device is busy.

The device also incorporates an intelligent erase algorithm that can detect when a byte location fails to erase properly. If an erase error arises, it will be indicated by the EPE bit in the Status Register.

## 6.8 Block Erase

The Block Erase command can be used to erase a block of eight pages at one time. This command is useful when needing to pre-erase larger amounts of memory and is more efficient than issuing eight separate Page Erase commands.

To perform a Block Erase with the optional DataFlash-L page size (528 bytes), an opcode of 50h must be clocked into the device followed by three address bytes comprised of two dummy bits, nine page address bits (PA11 - PA3), and 13 dummy bits. The nine page address bits are used to specify which block of eight pages is to be erased.

To perform a Block Erase with the default page size (512 bytes), an opcode of 50h must be clocked into the device followed by three address bytes comprised of three dummy bits, nine page address bits (A20 - A12), and 12 dummy bits. The nine page address bits are used to specify which block of eight pages is to be erased.

When a low-to-high transition occurs on the $\overline{CS}$ pin, the device will erase the selected block of eight pages. The erase operation is internally self-timed and should take place in a maximum time of $t_{BE}$. During this time, the RDY/$\overline{BUSY}$ bit in the Status Register will indicate that the device is busy.

The device also incorporates an intelligent erase algorithm that can detect when a byte location fails to erase properly. If an erase error arises, it will be indicated by the EPE bit in the Status Register.

**Table 6-1. Block Erase Addressing**

| PA11/ A20 | PA10/ A19 | PA9/ A18 | PA8/ A17 | PA7/ A16 | PA6/ A15 | PA5/ A14 | PA4/ A13 | PA3/ A12 | PA2/ A11 | PA1/ A10 | PA0/ A9 | Block |
|---|---|---|---|---|---|---|---|---|---|---|---|---|
| 0 | 0 | 0 | 0 | 0 | 0 | 0 | 0 | 0 | X | X | X | 0 |
| 0 | 0 | 0 | 0 | 0 | 0 | 0 | 0 | 1 | X | X | X | 1 |
| 0 | 0 | 0 | 0 | 0 | 0 | 0 | 1 | 0 | X | X | X | 2 |
| 0 | 0 | 0 | 0 | 0 | 0 | 0 | 1 | 1 | X | X | X | 3 |
| • | • | • | • | • | • | • | • | • | • | • | • | • |
| 1 | 1 | 1 | 1 | 1 | 1 | 1 | 0 | 0 | X | X | X | 508 |
| 1 | 1 | 1 | 1 | 1 | 1 | 1 | 0 | 1 | X | X | X | 509 |
| 1 | 1 | 1 | 1 | 1 | 1 | 1 | 1 | 0 | X | X | X | 510 |
| 1 | 1 | 1 | 1 | 1 | 1 | 1 | 1 | 1 | X | X | X | 511 |

## 6.9 Sector Erase

The Sector Erase command can be used to individually erase any sector in the main memory.

The main memory array is comprised of 17 sectors, and only one sector can be erased at a time. To perform an erase of Sector 0a or Sector 0b with the optional DataFlash-L page size (528 bytes), an opcode of 7Ch must be clocked into the device followed by three address bytes comprised of two dummy bits, nine page address bits (PA11 - PA3), and 13 dummy bits. To perform a Sector 1-15 erase, an opcode of 7Ch must be clocked into the device followed by three address bytes comprised of two dummy bits, four page address bits (PA11 - PA8), and 18 dummy bits.

To perform a Sector 0a or Sector 0b erase with the default page size (512 bytes), an opcode of 7Ch must be clocked into the device followed by three address bytes comprised of three dummy bits, nine page address bits (A20 - A12), and 12 dummy bits. To perform a Sector 1-15 erase, an opcode of 7Ch must be clocked into the device followed by three dummy bits, four page address bits (A20 - A17), and 17 dummy bits.

The page address bits are used to specify any valid address location within the sector to be erased. When a low-to high transition occurs on the $\overline{CS}$ pin, the device will erase the selected sector. The erase operation is internally self-timed and should take place in a maximum time of $t_{SE}$. During this time, the RDY/$\overline{BUSY}$ bit in the Status Register will indicate that the device is busy.

The device also incorporates an intelligent algorithm that can detect when a byte location fails to erase properly. If an erase error arises, it will be indicated by the EPE bit in the Status Register.

**Table 6-2. Sector Erase Addressing**

| PA11/ A20 | PA10/ A19 | PA9/ A18 | PA8/ A17 | PA7/ A16 | PA6/ A15 | PA5/ A14 | PA4/ A13 | PA3/ A12 | PA2/ A11 | PA1/ A10 | PA0/ A9 | Sector |
|---|---|---|---|---|---|---|---|---|---|---|---|---|
| 0 | 0 | 0 | 0 | 0 | 0 | 0 | 0 | 0 | X | X | X | 0a |
| 0 | 0 | 0 | 0 | 0 | 0 | 0 | 0 | 1 | X | X | X | 0b |
| 0 | 0 | 0 | 1 | X | X | X | X | X | X | X | X | 1 |
| 0 | 0 | 1 | 0 | X | X | X | X | X | X | X | X | 2 |
| •<br>•<br>• | •<br>•<br>• | •<br>•<br>• | •<br>•<br>• | •<br>•<br>• | •<br>•<br>• | •<br>•<br>• | •<br>•<br>• | •<br>•<br>• | •<br>•<br>• | •<br>•<br>• | •<br>•<br>• | •<br>•<br>• |
| 1 | 1 | 0 | 0 | X | X | X | X | X | X | X | X | 12 |
| 1 | 1 | 0 | 1 | X | X | X | X | X | X | X | X | 13 |
| 1 | 1 | 1 | 0 | X | X | X | X | X | X | X | X | 14 |
| 1 | 1 | 1 | 1 | X | X | X | X | X | X | X | X | 15 |

## 6.10 Chip Erase

The Chip Erase command allows the entire main memory array to be erased can be erased at one time.

To execute the Chip Erase command, a 4-byte command sequence of C7h, 94h, 80h, and 9Ah must be clocked into the device. Since the entire memory array is to be erased, no address bytes need to be clocked into the device, and any data clocked in after the opcode will be ignored. After the last bit of the opcode sequence has been clocked in, the $\overline{CS}$ pin must be deasserted to start the erase process. The erase operation is internally self-timed and should take place in a time of $t_{CE}$. During this time, the RDY/$\overline{BUSY}$ bit in the Status Register will indicate that the device is busy.

The Chip Erase command will not affect sectors that are protected or locked down; the contents of those sectors will remain unchanged. Only those sectors that are not protected or locked down will be erased.

The $\overline{WP}$ pin can be asserted while the device is erasing, but protection will not be activated until the internal erase cycle completes.

The device also incorporates an intelligent algorithm that can detect when a byte location fails to erase properly. If an erase error arises, it will be indicated by the EPE bit in the Status Register.

**Table 6-3. Chip Erase Command**

| Command | Byte 1 | Byte 2 | Byte 3 | Byte 4 |
|---|---|---|---|---|
| Chip Erase | C7h | 94h | 80h | 9Ah |

**Figure 6-1. Chip Erase**

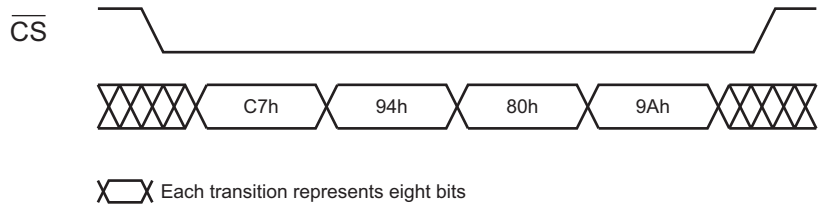

# 7. Sector Protection

Two protection methods, hardware and software controlled, are provided for protection against inadvertent or erroneous program and erase cycles. The software controlled method relies on the use of software commands to enable and disable sector protection while the hardware controlled method employs the use of the Write Protect ($\overline{WP}$) pin. The selection of which sectors that are to be protected or unprotected against program and erase operations is specified in the Nonvolatile Sector Protection Register. The status of whether or not sector protection has been enabled or disabled by either the software or the hardware controlled methods can be determined by checking the Status Register.

## 7.1 Software Sector Protection

Software controlled protection is useful in applications in which the $\overline{WP}$ pin is not or cannot be controlled by a host processor. In such instances, the $\overline{WP}$ pin may be left floating (the $\overline{WP}$ pin is internally pulled high) and sector protection can be controlled using the Enable Sector Protection and Disable Sector Protection commands.

If the device is power cycled, then the software controlled protection will be disabled. Once the device is powered up, the Enable Sector Protection command should be reissued if sector protection is desired and if the $\overline{WP}$ pin is not used.

### 7.1.1 Enable Sector Protection

Sectors specified for protection in the Sector Protection Register can be protected from program and erase operations by issuing the Enable Sector Protection command. To enable the sector protection, a 4-byte command sequence of 3Dh, 2Ah, 7Fh, and A9h must be clocked into the device. After the last bit of the opcode sequence has been clocked in, the $\overline{CS}$ pin must be deasserted to enable the Sector Protection.

**Table 7-1. Enable Sector Protection Command**

| Command | Byte 1 | Byte 2 | Byte 3 | Byte 4 |
|---|---|---|---|---|
| Enable Sector Protection | 3Dh | 2Ah | 7Fh | A9h |

**Figure 7-1. Enable Sector Protection**

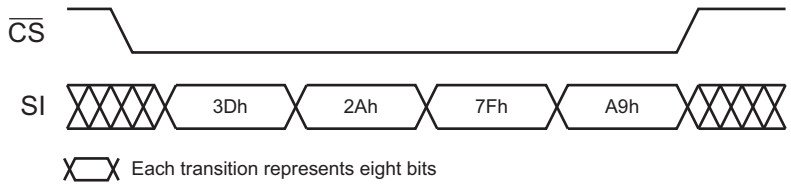


### 7.1.2 Disable Sector Protection

To disable the sector protection, a 4-byte command sequence of 3Dh, 2Ah, 7Fh, and 9Ah must be clocked into the device. After the last bit of the opcode sequence has been clocked in, the $\overline{CS}$ pin must be deasserted to disable the sector protection.

**Table 7-2. Disable Sector Protection Command**

| Command | Byte 1 | Byte 2 | Byte 3 | Byte 4 |
|---|---|---|---|---|
| Disable Sector Protection | 3Dh | 2Ah | 7Fh | 9Ah |

**Figure 7-2. Disable Sector Protection**

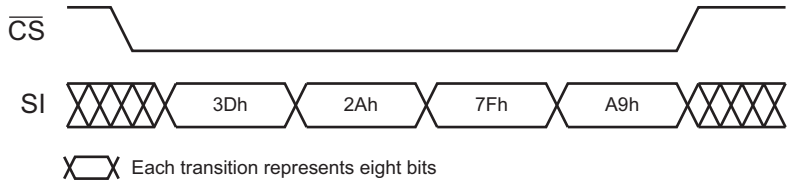


## 7.2 Hardware Controlled Protection

Sectors specified for protection in the Sector Protection Register and the Sector Protection Register itself can be protected from program and erase operations by asserting the $\overline{WP}$ pin and keeping the pin in its asserted state. The Sector Protection Register and any sector specified for protection cannot be erased or programmed as long as the $\overline{WP}$ pin is asserted. In order to modify the Sector Protection Register, the $\overline{WP}$ pin must be deasserted. If the $\overline{WP}$ pin is permanently connected to GND, then the contents of the Sector Protection Register cannot be changed. If the $\overline{WP}$ pin is deasserted or permanently connected to $V_{CC}$, then the contents of the Sector Protection Register can be modified.

The $\overline{WP}$ pin will override the software controlled protection method but only for protecting the sectors.

**Example:** If the sectors were not previously protected by the Enable Sector Protection command, then simply asserting the $\overline{WP}$ pin would enable the sector protection within the maximum specified $t_{WPE}$ time. When the $\overline{WP}$ pin is deasserted, however, the sector protection would no longer be enabled (after the maximum specified $t_{WPD}$ time) as long as the Enable Sector Protection command was not issued while the $\overline{WP}$ pin was asserted. If the Enable Sector Protection command was issued before or while the $\overline{WP}$ pin was asserted, then simply deasserting the $\overline{WP}$ pin would not disable the sector protection. In this case, the Disable Sector Protection command would need to be issued while the $\overline{WP}$ pin is deasserted to disable the sector protection. The Disable Sector Protection command is also ignored whenever the $\overline{WP}$ pin is asserted.

A noise filter is incorporated to help protect against spurious noise that may inadvertently assert or deassert the $\overline{WP}$ pin.

Figures 7-3 and Table 7-3 detail the sector protection status for various scenarios of the $\overline{WP}$ pin, the Enable Sector Protection command, and the Disable Sector Protection command.

**Figure 7-3. $\overline{WP}$ Pin and Protection Status**

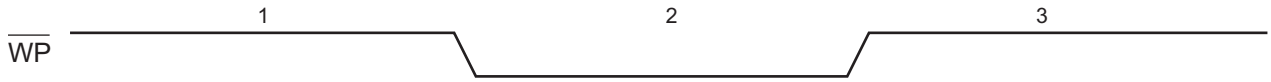


**Table 7-3. $\overline{WP}$ Pin and Protection Status**

| Time Period | $\overline{WP}$ Pin | Enable Sector Protection Command | Disable Sector Protection Command | Sector Protection Status | Sector Protection Register |
|---|---|---|---|---|---|
| 1 | High | Command Not Issued Previously | X | Disabled | Read/Write |
| | | — | Issue Command | Disabled | Read/Write |
| | | Issue Command | — | Enabled | Read/Write |
| 2 | Low | X | X | Enabled | Read |
| 3 | High | Command Issued During Period 1 or 2 | Not Issued Yet | Enabled | Read/Write |
| | | — | Issue Command | Disabled | Read/Write |
| | | Issue Command | — | Enabled | Read/Write |

## 7.3 Sector Protection Register

The nonvolatile Sector Protection Register specifies which sectors are to be protected or unprotected with either the software or hardware controlled protection methods. The Sector Protection Register contains 16 bytes of data, of which byte locations 0 through 15 contain values that specify whether Sectors 0 through 15 will be protected or unprotected. The Sector Protection Register is user modifiable and must be erased before it can be reprogrammed. Table 7-4 illustrates the format of the Sector Protection Register.

**Table 7-4. Sector Protection Register**

| Sector Number | 0 (0a, 0b) | 1 to 15 |
|---|---|---|
| Protected | See Table 7-5 | FFh |
| Unprotected | | 00h |

Note: 1. The default values for bytes 0 through 15 are 00h when shipped from Adesto.

**Table 7-5. Sector 0 (0a, 0b) Sector Protection Register Byte Value**

| | Bit 7:6 | Bit 5:4 | Bit 3:2 | Bit 1:0 | |
|---|---|---|---|---|---|
| | Sector 0a (Page 0-7) | Sector 0b (Page 8-255) | N/A | N/A | Data Value |
| Sectors 0a and 0b Unprotected | 00 | 00 | XX | XX | 0xh |
| Protect Sector 0a | 11 | 00 | XX | XX | Cxh |
| Protect Sector 0b | 00 | 11 | XX | XX | 3xh |
| Protect Sectors 0a and 0b | 11 | 11 | XX | XX | Fxh |

Note: 1. x = Don't care

### 7.3.1 Erase Sector Protection Register

In order to modify and change the values of the Sector Protection Register, it must first be erased using the Erase Sector Protection Register command.

To erase the Sector Protection Register, a 4-byte command sequence of 3Dh, 2Ah, 7Fh, and CFh must be clocked into the device. After the last bit of the opcode sequence has been clocked in, the $\overline{CS}$ pin must be deasserted to initiate the internally self-timed erase cycle. The erasing of the Sector Protection Register should take place in a maximum time of $t_{PE}$. During this time, the RDY/$\overline{BUSY}$ bit in the Status Register will indicate that the device is busy. If the device is powered-down before the completion of the erase cycle, then the contents of the Sector Protection Register cannot be guaranteed.

The Sector Protection Register can be erased with sector protection enabled or disabled. Since the erased state (FFh) of each byte in the Sector Protection Register is used to indicate that a sector is specified for protection, leaving the sector protection enabled during the erasing of the register allows the protection scheme to be more effective in the prevention of accidental programming or erasing of the device. If for some reason an erroneous program or erase command is sent to the device immediately after erasing the Sector Protection Register and before the register can be reprogrammed, then the erroneous program or erase command will not be processed because all sectors would be protected.

**Table 7-6. Erase Sector Protection Register Command**

| Command | Byte 1 | Byte 2 | Byte 3 | Byte 4 |
|---|---|---|---|---|
| Erase Sector Protection Register | 3Dh | 2Ah | 7Fh | CFh |

**Figure 7-4. Erase Sector Protection Register**

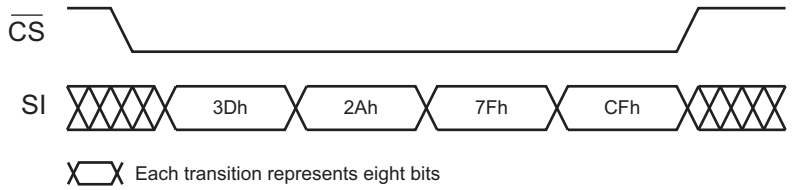


### 7.3.2 Program Sector Protection Register

Once the Sector Protection Register has been erased, it can be reprogrammed using the Program Sector Protection Register command.

To program the Sector Protection Register, a 4-byte command sequence of 3Dh, 2Ah, 7Fh, and FCh must be clocked into the device followed by 16 bytes of data corresponding to Sectors 0 through 15. After the last bit of the opcode sequence and data have been clocked in, the $\overline{CS}$ pin must be deasserted to initiate the internally self-timed program cycle. The programming of the Sector Protection Register should take place in a maximum time of $t_P$. During this time, the RDY/$\overline{BUSY}$ bit in the Status Register will indicate that the device is busy. If the device is powered-down before the completion of the erase cycle, then the contents of the Sector Protection Register cannot be guaranteed.

If the proper number of data bytes is not clocked in before the $\overline{CS}$ pin is deasserted, then the protection status of the sectors corresponding to the bytes not clocked in cannot be guaranteed.

**Example:** If only the first two bytes are clocked in instead of the complete 16 bytes, then the protection status of the last 14 sectors cannot be guaranteed. Furthermore, if more than 16 bytes of data is clocked into the device, then the data will wrap back around to the beginning of the register. For instance, if 17 bytes of data are clocked in, then the 17th byte will be stored at byte location 0 of the Sector Protection Register.

The data bytes clocked into the Sector Protection Register need to be valid values (0xh, 3xh, Cxh, and Fxh for Sector 0a or Sector 0b, and 00h or FFh for other sectors) in order for the protection to function correctly. If a non-valid value is clocked into a byte location of the Sector Protection Register, then the protection status of the sector corresponding to that byte location cannot be guaranteed.

**Example:** If a value of 17h is clocked into byte location 2 of the Sector Protection Register, then the protection status of Sector 2 cannot be guaranteed.

The Sector Protection Register can be reprogrammed while the sector protection is enabled or disabled. Being able to reprogram the Sector Protection Register with the sector protection enabled allows the user to temporarily disable the sector protection to an individual sector rather than disabling sector protection completely.

The Program Sector Protection Register command utilizes Buffer 1 for processing. Therefore, the contents of Buffer 1 will be altered from its previous state when this command is issued.

**Table 7-7. Program Sector Protection Register Command**

| Command | Byte 1 | Byte 2 | Byte 3 | Byte 4 |
|---|---|---|---|---|
| Program Sector Protection Register | 3Dh | 2Ah | 7Fh | FCh |

**Figure 7-5. Program Sector Protection Register**

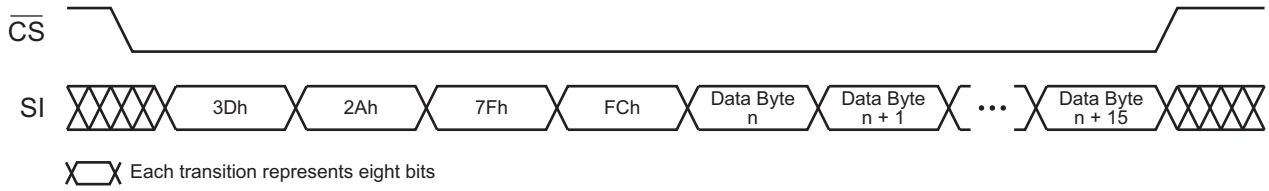


### 7.3.3 Read Sector Protection Register

To read the Sector Protection Register, an opcode of 32h and three dummy bytes must be clocked into the device. After the last bit of the opcode and dummy bytes have been clocked in, any additional clock pulses on the SCK pin will result in the Sector Protection Register contents being output on the SO pin. The first byte (byte location 0) corresponds to Sector 0 (0a and 0b), the second byte corresponds to Sector 1, and the last byte (byte location 15) corresponds to Sector 15. Once the last byte of the Sector Protection Register has been clocked out, any additional clock pulses will result in undefined data being output on the SO pin. The $\overline{CS}$ pin must be deasserted to terminate the Read Sector Protection Register operation and put the output into a high-impedance state.

**Table 7-8. Read Sector Protection Register Command**

| Command | Byte 1 | Byte 2 | Byte 3 | Byte 4 |
|---|---|---|---|---|
| Read Sector Protection Register | 32h | XXh | XXh | XXh |

Note: 1. XX = Dummy byte

**Figure 7-6. Read Sector Protection Register**

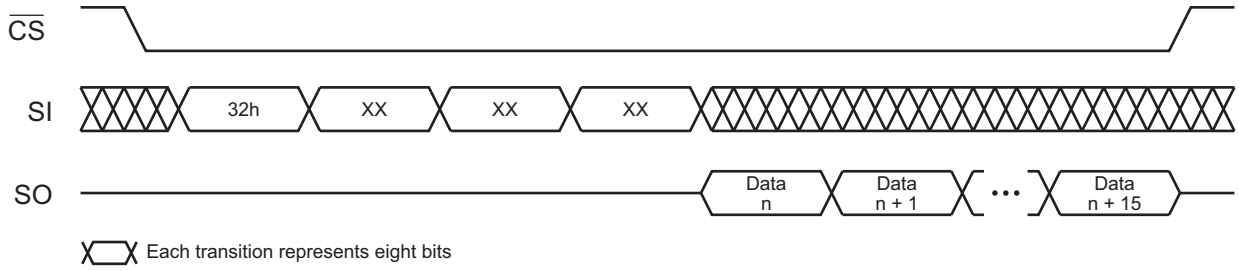


### 7.3.4 About the Sector Protection Register

The Sector Protection Register is subject to a limit of 10,000 erase/program cycles. Users are encouraged to carefully evaluate the number of times the Sector Protection Register will be modified during the course of the application's life cycle. If the application requires that the Security Protection Register be modified more than the specified limit of 10,000 cycles because the application needs to temporarily unprotect individual sectors (sector protection remains enabled while the Sector Protection Register is reprogrammed), then the application will need to limit this practice. Instead, a combination of temporarily unprotecting individual sectors along with disabling sector protection completely will need to be implemented by the application to ensure that the limit of 10,000 cycles is not exceeded

.

# 8. Security Features

## 8.1 Security Register

The device contains a specialized Security Register that can be used for purposes such as unique device serialization or locked key storage. The register is comprised of a total of 128 bytes (byte locations 0 through 127). All 128 bytes of the Security Register are factory programmed by Adesto and will contain a unique value for each device. The factory programmed data is fixed and cannot be changed.

**Table 8-1. Security Register**

| | Security Register Byte Number | | | | | | | |
|---|---|---|---|---|---|---|---|---|
| | 0 | 1 | . . . | | . . . | | . . . | 127 |
| Data Type | Factory Programmed by Adesto | | | | | | | |

### 8.1.1 Reading the Security Register

To read the Security Register, an opcode of 77h and three dummy bytes must be clocked into the device. After the last dummy bit has been clocked in, the contents of the Security Register can be clocked out on the SO pin. After the last byte of the Security Register has been read, additional pulses on the SCK pin will result in undefined data being output on the SO pin.

Deasserting the $\overline{CS}$ pin will terminate the Read Security Register operation and put the SO pin into a high-impedance state.

**Figure 8-1. Read Security Register**

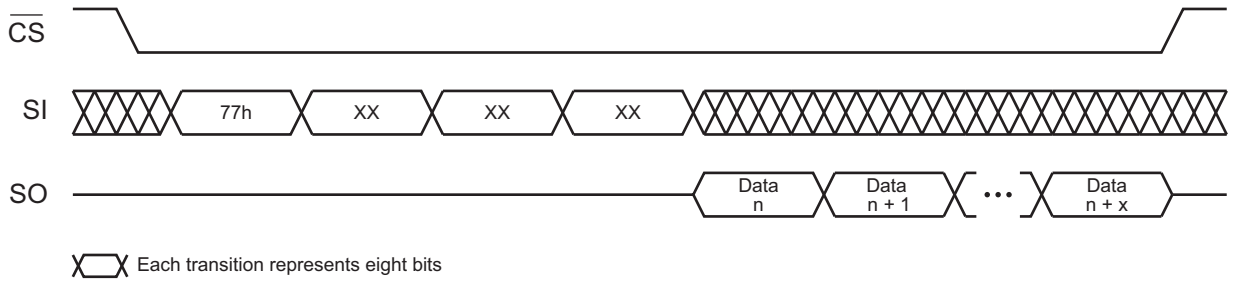

# 9. Additional Commands

## 9.1 Main Memory Page to Buffer Transfer

A page of data can be transferred from the main memory to either Buffer 1 or Buffer 2. To transfer a page of data using the optional DataFlash-L page size (528 bytes), an opcode of 53h for Buffer 1 or 55h for Buffer 2 must be clocked into the device followed by three address bytes comprised of two dummy bits, 12 page address bits (PA11 - PA0) which specify the page in main memory to be transferred, and 10 dummy bits. To transfer a page of data using the default page size (512 bytes), an opcode of 53h for Buffer 1 and 55h for Buffer 2 must be clocked into the device followed by three address bytes comprised of three dummy bits, 12 page address bits (A20 - A9) which specify the page in the main memory to be transferred, and nine dummy bits.

The $\overline{CS}$ pin must be low while toggling the SCK pin to load the opcode and the three address bytes from the input pin (SI). The transfer of the page of data from the main memory to the buffer will begin when the $\overline{CS}$ pin transitions from a low to a high state. During the page transfer time ($t_{XFR}$), the RDY/$\overline{BUSY}$ bit in the Status Register can be read to determine whether or not the transfer has been completed.

## 9.2 Main Memory Page to Buffer Compare

A page of data in main memory can be compared to the data in Buffer 1 or Buffer 2 as a method to ensure that data was successfully programmed after a Buffer to Main Memory Page Program command. To compare a page of data with the optional DataFlash-L page size (528 bytes), an opcode of 60h for Buffer 1 or 61h for Buffer 2 must be clocked into the device followed by three address bytes comprised of two dummy bits, 12 page address bits (PA11 - PA0) which specify the page in the main memory to be compared to the buffer, and 10 dummy bits. To compare a page of data with the default page size (512 bytes), an opcode of 60h for Buffer 1 or 61h for Buffer 2 must be clocked into the device followed by three address bytes comprised of three dummy bits, 12 page address bits (A20 - A9) which specify the page in the main memory to be compared to the buffer, and nine dummy bits.

The $\overline{CS}$ pin must be low while toggling the SCK pin to load the opcode and the address bytes from the input pin (SI). On the low-to-high transition of the $\overline{CS}$ pin, the data bytes in the selected Main Memory Page will be compared with the data bytes in Buffer 1 or Buffer 2. During the compare time ($t_{COMP}$), the RDY/$\overline{BUSY}$ bit in the Status Register will indicate that the part is busy. On completion of the compare operation, bit 6 of the Status Register will be updated with the result of the compare.

## 9.3 Auto Page Rewrite

This command only needs to be used if the possibility exists that static (non-changing) data may be stored in a page or pages of a sector and the other pages of the same sector are erased and programmed a large number of times. Applications that modify data in a random fashion within a sector may fall into this category. To preserve data integrity of a sector, each page within a sector must be updated/rewritten at least once within every 50,000 cumulative page erase/program operations within that sector. The Auto Page Rewrite command provides a simple and efficient method to “refresh” a page in the main memory array in a single operation.

The Auto Page Rewrite command is a combination of the Main Memory Page to Buffer Transfer and Buffer to Main Memory Page Program with Built-In Erase commands. With the Auto Page Rewrite command, a page of data is first transferred from the main memory to Buffer 1 or Buffer 2 and then the same data (from Buffer 1 or Buffer 2) is programmed back into the same page of main memory, essentially “refreshing” the contents of that page. To start the Auto Page Rewrite operation with the optional DataFlash-L page size (528 bytes), a 1-byte opcode, 58H for Buffer 1 or 59H for Buffer 2, must be clocked into the device followed by three address bytes comprised of two dummy bits, 12 page address bits (PA11-PA0) that specify the page in main memory to be rewritten, and 10 dummy bits.

To initiate an Auto Page Rewrite with the a default page size (512 bytes), the opcode 58H for Buffer 1 or 59H for Buffer 2, must be clocked into the device followed by three address bytes consisting of three dummy bits, 12 page address bits (A20 - A9) that specify the page in the main memory that is to be rewritten, and nine dummy bits. When a low-to-high transition occurs on the $\overline{CS}$ pin, the part will first transfer data from the page in main memory to a buffer and then program the data from the buffer back into same page of main memory. The operation is internally self-timed and should take place in a maximum time of $t_{EP}$. During this time, the RDY/$\overline{BUSY}$ Status Register will indicate that the part is busy.

If a sector is programmed or reprogrammed sequentially page by page and the possibility does not exist that there will be a page or pages of static data, then the programming algorithm shown in Figure 26-1 on page 55 is recommended. Otherwise, if there is a chance that there may be a page or pages of a sector that will contain static data, then the programming algorithm shown in Figure 26-2 on page 56 is recommended.

The Auto Page Rewrite command uses the same opcodes as the Read-Modify-Write command. If data bytes are clocked into the device, then the device will perform a Read-Modify-Write operation. See the Read-Modify-Write command description on page 12 for more details.

## 9.4 Status Register Read

The 2-byte Status Register can be used to determine the device's ready/busy status, page size, a Main Memory Page to Buffer Compare operation result, the sector protection status, erase/program error status, and the device density. The Status Register can be read at any time, including during an internally self-timed program or erase operation.

To read the Status Register, the $\overline{CS}$ pin must first be asserted and then the opcode D7h must be clocked into the device. After the opcode has been clocked in, the device will begin outputting Status Register data on the SO pin during every subsequent clock cycle. After the second byte of the Status Register has been clocked out, the sequence will repeat itself, starting again with the first byte of the Status Register, as long as the $\overline{CS}$ pin remains asserted and the clock pin is being pulsed. The data in the Status Register is constantly being updated, so each repeating sequence may output new data. The RDY/$\overline{BUSY}$ status is available for both bytes of the Status Register and is updated for each byte.

Deasserting the $\overline{CS}$ pin will terminate the Status Register Read operation and put the SO pin into a high-impedance state. The $\overline{CS}$ pin can be deasserted at any time and does not require that a full byte of data be read.

**Table 9-1. Status Register Format – Byte 1**

| Bit | Name | | Type(1) | Description | |
|---|---|---|---|---|---|
| 7 | RDY/$\overline{BUSY}$ | Ready/Busy Status | R | 0 | Device is busy with an internal operation. |
| | | | | 1 | Device is ready. |
| 6 | COMP | Compare Result | R | 0 | Main memory page data matches buffer data. |
| | | | | 1 | Main memory page data does not match buffer data. |
| 5:2 | DENSITY | Density Code | R | 1011 | 16-Mbit |
| 1 | PROTECT | Sector Protection Status | R | 0 | Sector protection is disabled. |
| | | | | 1 | Sector protection is enabled. |
| 0 | PAGE SIZE | Page Size Configuration | R | 0 | Device is configured for optional DataFlash-L page size (528 bytes). |
| | | | | 1 | Device is configured for default page size (512 Bytes). |

Note: 1. R = Readable only

**Table 9-2. Status Register Format – Byte 2**

| Bit | Name | | Type[1] | Description | |
|---|---|---|---|---|---|
| 7 | RDY/$\overline{\text{BUSY}}$ | Ready/Busy Status | R | 0 | Device is busy with an internal operation. |
| | | | | 1 | Device is ready. |
| 6 | RES | Reserved for Future Use | R | 0 | Reserved for future use. |
| 5 | EPE | Erase/Program Error | R | 0 | Erase or program operation was successful. |
| | | | | 1 | Erase or program error detected. |
| 4 | RES | Reserved for Future Use | R | 0 | Reserved for future use. |
| 3 | RES | Reserved for Future Use | R | 0 | Reserved for future use. |
| 2 | RES | Reserved for Future Use | R | x | Reserved for future use. |
| 1 | RES | Reserved for Future Use | R | x | Reserved for future use. |
| 0 | RES | Reserved for Future Use | R | x | Reserved for future use. |

Note: 1. R = Readable only
2. x = ”Don’t care”. Can be “0” or “1”.

### 9.4.1 RDY/$\overline{\text{BUSY}}$ Bit

The RDY/$\overline{\text{BUSY}}$ bit is used to determine whether or not an internal operation, such as a program or erase, is in progress. To poll the RDY/$\overline{\text{BUSY}}$ bit to detect the completion of an internally timed operation, new Status Register data must be continually clocked out of the device until the state of the RDY/$\overline{\text{BUSY}}$ bit changes from a Logic 0 to a Logic 1.

### 9.4.2 COMP Bit

The result of the most recent Main Memory Page to Buffer Compare operation is indicated using the COMP bit. If the COMP bit is a Logic 1, then at least one bit of the data in the Main Memory Page does not match the data in the buffer.

### 9.4.3 DENSITY Bits

The device density is indicated using the DENSITY bits. For the AT25PE16, the four bit binary value is 1011. The decimal value of these four binary bits does not actually equate to the device density; the four bits represent a combinational code relating to differing densities of DataFlash-L devices. The DENSITY bits are not the same as the density code indicated in the JEDEC Device ID information. The DENSITY bits are provided only for backward compatibility to older generation DataFlash-L devices.

### 9.4.4 PROTECT Bit

The PROTECT bit provides information to the user on whether or not the sector protection has been enabled or disabled, either by the software-controlled method or the hardware-controlled method.

### 9.4.5 PAGE SIZE Bit

The PAGE SIZE bit indicates whether the buffer size and the page size of the main memory array is configured for the default page size (512 Bytes) or the optional DataFlash-L page size (528 bytes).

### 9.4.6 EPE Bit

The EPE bit indicates whether the last erase or program operation completed successfully or not. If at least one byte during the erase or program operation did not erase or program properly, then the EPE bit will be set to the Logic 1 state. The EPE bit will not be set if an erase or program operation aborts for any reason. The EPE bit is updated after every erase and program operation.

## 10. Deep Power-Down

During normal operation, the device will be placed in the standby mode to consume less power as long as the $\overline{CS}$ pin remains deasserted and no internal operation is in progress. The Deep Power-Down command offers the ability to place the device into an even lower power consumption state called the Deep Power-Down mode.

When the device is in the Deep Power-Down mode, all commands including the Status Register Read command will be ignored with the exception of the Resume from Deep Power-Down command. Since all commands will be ignored, the mode can be used as an extra protection mechanism against program and erase operations.

Entering the Deep Power-Down mode is accomplished by simply asserting the $\overline{CS}$ pin, clocking in the opcode B9h, and then deasserting the $\overline{CS}$ pin. Any additional data clocked into the device after the opcode will be ignored. When the $\overline{CS}$ pin is deasserted, the device will enter the Deep Power-Down mode within the maximum time of $t_{EDPD}$.

The complete opcode must be clocked in before the $\overline{CS}$ pin is deasserted, and the $\overline{CS}$ pin must be deasserted on an even byte boundary (multiples of eight bits); otherwise, the device will abort the operation and return to the standby mode once the $\overline{CS}$ pin is deasserted. In addition, the device will default to the standby mode after a power cycle.

The Deep Power-Down command will be ignored if an internally self-timed operation such as a program or erase cycle is in progress. The Deep Power-Down command must be reissued after the internally self-timed operation has been completed in order for the device to enter the Deep Power-Down mode.

**Figure 10-1. Deep Power-Down**

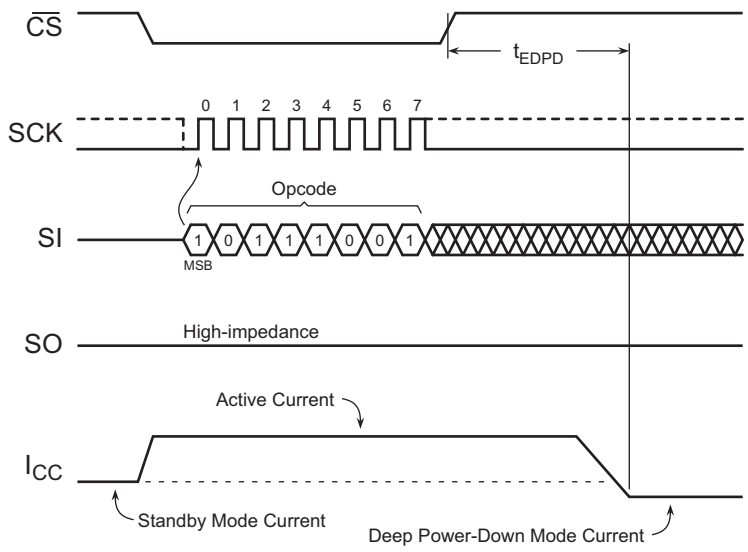

## 10.1 Resume from Deep Power-Down

In order to exit the Deep Power-Down mode and resume normal device operation, the Resume from Deep Power-Down command must be issued. The Resume from Deep Power-Down command is the only command that the device will recognize while in the Deep Power-Down mode.

To resume from the Deep Power-Down mode, the $\overline{CS}$ pin must first be asserted and then the opcode ABh must be clocked into the device. Any additional data clocked into the device after the opcode will be ignored. When the $\overline{CS}$ pin is deasserted, the device will exit the Deep Power-Down mode and return to the standby mode within the maximum time of $t_{RDPD}$. After the device has returned to the standby mode, normal command operations such as Continuous Array Read can be resumed.

If the complete opcode is not clocked in before the $\overline{CS}$ pin is deasserted, or if the $\overline{CS}$ pin is not deasserted on an even byte boundary (multiples of eight bits), then the device will abort the operation and return to the Deep Power-Down mode.

**Figure 10-2. Resume from Deep Power-Down**

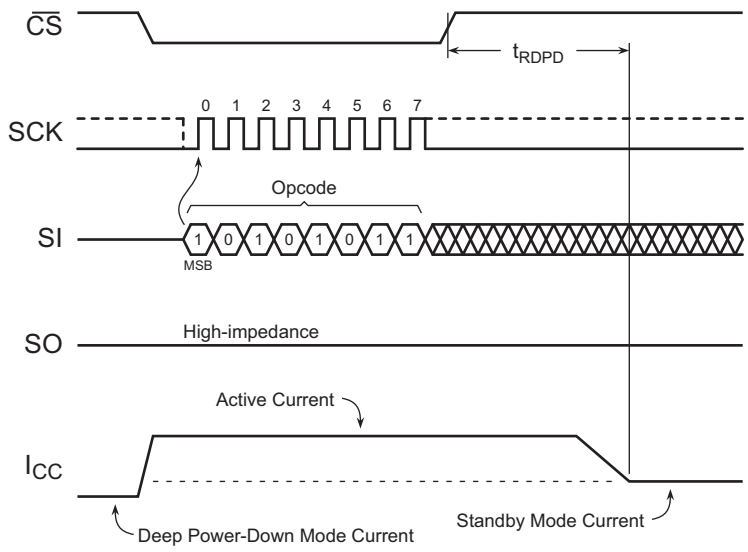

## 10.2 Ultra-Deep Power-Down

The Ultra-Deep Power-Down mode allows the device to consume far less power compared to the standby and Deep Power-Down modes by shutting down additional internal circuitry. Since almost all active circuitry is shutdown in this mode to conserve power, the contents of the SRAM buffers cannot be maintained. Therefore, any data stored in the SRAM buffers will be lost once the device enters the Ultra-Deep Power-Down mode.

When the device is in the Ultra-Deep Power-Down mode, all commands including the Status Register Read and Resume from Deep Power-Down commands will be ignored. Since all commands will be ignored, the mode can be used as an extra protection mechanism against program and erase operations.

Entering the Ultra-Deep Power-Down mode is accomplished by simply asserting the $\overline{CS}$ pin, clocking in the opcode 79h, and then deasserting the $\overline{CS}$ pin. Any additional data clocked into the device after the opcode will be ignored. When the $\overline{CS}$ pin is deasserted, the device will enter the Ultra-Deep Power-Down mode within the maximum time of $t_{EUDPD}$.

The complete opcode must be clocked in before the $\overline{CS}$ pin is deasserted, and the $\overline{CS}$ pin must be deasserted on an even byte boundary (multiples of eight bits); otherwise, the device will abort the operation and return to the standby mode once the $\overline{CS}$ pin is deasserted. In addition, the device will default to the standby mode after a power cycle.

The Ultra-Deep Power-Down command will be ignored if an internally self-timed operation such as a program or erase cycle is in progress. The Ultra-Deep Power-Down command must be reissued after the internally self-timed operation has been completed in order for the device to enter the Ultra-Deep Power-Down mode.

**Figure 10-3. Ultra-Deep Power-Down**

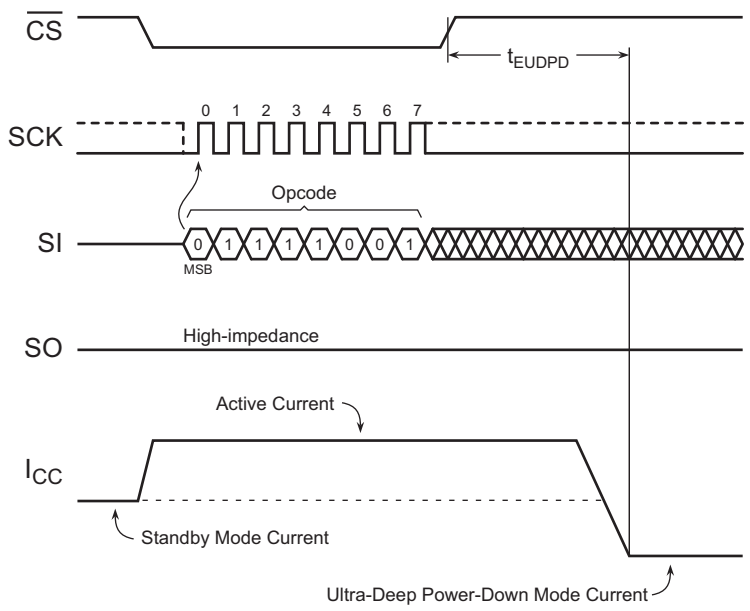

### 10.2.1 Exit Ultra-Deep Power-Down

To exit from the Ultra-Deep Power-Down mode, the $\overline{CS}$ pin must simply be pulsed by asserting the $\overline{CS}$ pin, waiting the minimum necessary $t_{CSLU}$ time, and then deasserting the $\overline{CS}$ pin again. To facilitate simple software development, a dummy byte opcode can also be entered while the $\overline{CS}$ pin is being pulsed just as in a normal operation. After the $\overline{CS}$ pin has been deasserted, the device will exit from the Ultra-Deep Power-Down mode and return to the standby mode within a maximum time of $t_{XUDPD}$. If the $\overline{CS}$ pin is reasserted before the $t_{XUDPD}$ time has elapsed in an attempt to start a new operation, then that operation will be ignored and nothing will be performed. The system must wait for the device to return to the standby mode before normal command operations such as Continuous Array Read can be resumed.

Since the contents of the SRAM buffers cannot be maintained while in the Ultra-Deep Power-Down mode, the SRAM buffers will contain undefined data when the device returns to the standby mode.

**Figure 10-4. Exit Ultra-Deep Power-Down**

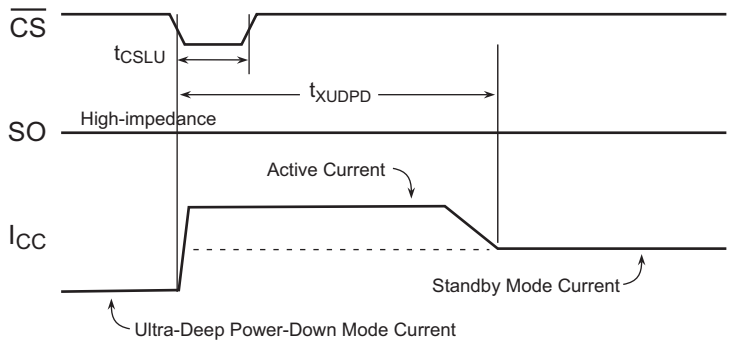


Chip Select Low

By asserting the CS pin, waiting the minimum necessary $t_{XUDPD}$ time, and then clocking in the first bit of the next Opcode command cycle. If the first bit of the next command is clocked in before the $t_{XUDPD}$ time has elapsed, the device will exit Ultra Deep Power Down, however the intended operation will be ignored.

**Figure 10-5. Exit Ultra-Deep Power-Down (Chip Select Low)**

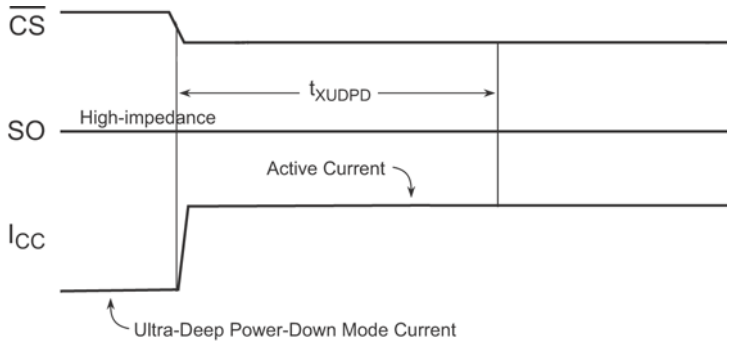

# 11. Buffer and Page Size Configuration

The memory array of DataFlash-L devices is actually larger than other Serial Flash devices in that extra user-accessible bytes are provided in each page of the memory array. For the AT25PE16, there are an extra 16 bytes of memory in each page for a total of an extra 64KB (512-Kbits) of user-accessible memory.

Some applications, however, may not want to take advantage of this extra memory and instead architect their software to operate on a binary, logical addressing scheme. To allow this, the DataFlash-L can be configured so that the buffer and page sizes are 512 bytes instead of the optional 528 bytes. In addition, the configuration of the buffer and page sizes is reversible and can be changed from 528 bytes to 512 bytes or from 512 bytes to 528 bytes. The configured setting is stored in an internal nonvolatile register so that the buffer and page size configuration is not affected by power cycles. The nonvolatile register has a limit of 10,000 erase/program cycles; therefore, care should be taken to not switch between the size options more than 10,000 times.

Devices are initially shipped from Adesto with the buffer and page sizes set to 512 bytes. To configure the device for default page size (512 Bytes), a 4-byte opcode sequence of 3Dh, 2Ah, 80h, and A6h must be clocked into the device. After the last bit of the opcode sequence has been clocked in, the $\overline{CS}$ pin must be deasserted to initiate the internally self-timed configuration process and nonvolatile register program cycle. The programming of the nonvolatile register should take place in a time of $t_{EP}$, during which time the RDY/$\overline{BUSY}$ bit in the Status Register will indicate that the device is busy. The device does not need to be power cycled after the completion of the configuration process and register program cycle in order for the buffer and page size to be configured to 512 bytes.

To configure the device for optional DataFlash-L page size (528 bytes), a 4-byte opcode sequence of 3Dh, 2Ah, 80h, and A7h must be clocked into the device. After the last bit of the opcode sequence has been clocked in, the $\overline{CS}$ pin must be deasserted to initial the internally self-timed configuration process and nonvolatile register program cycle. The programming of the nonvolatile register should take place in a time of $t_{EP}$, during which time the RDY/$\overline{BUSY}$ bit in the Status Register will indicate that the device is busy. The device does not need to be power cycled after the completion of the configuration process and register program cycle in order for the buffer and page size to be configured to 528 bytes.

**Table 11-1. Buffer and Page Size Configuration Commands**

| Command | Byte 1 | Byte 2 | Byte 3 | Byte 4 |
|---|---|---|---|---|
| Default DataFlash-L page size (512 Bytes) | 3Dh | 2Ah | 80h | A6h |
| Optional DataFlash-L page size (528 bytes) | 3Dh | 2Ah | 80h | A7h |

**Figure 11-1. Buffer and Page Size Configuration**

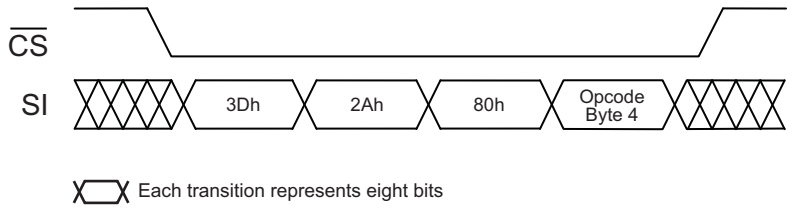

# 12. Manufacturer and Device ID Read

Identification information can be read from the device to enable systems to electronically query and identify the device while it is in the system. The identification method and the command opcode comply with the JEDEC Standard for "Manufacturer and Device ID Read Methodology for SPI Compatible Serial Interface Memory Devices". The type of information that can be read from the device includes the JEDEC-defined Manufacturer ID, the vendor-specific Device ID, and the vendor-specific Extended Device Information.

The Read Manufacturer and Device ID command is limited to a maximum clock frequency of $f_{CLK}$. Since not all Flash devices are capable of operating at very high clock frequencies, applications should be designed to read the identification information from the devices at a reasonably low clock frequency to ensure that all devices to be used in the application can be identified properly. Once the identification process is complete, the application can then increase the clock frequency to accommodate specific Flash devices that are capable of operating at the higher clock frequencies.

To read the identification information, the $\overline{CS}$ pin must first be asserted and then the opcode 9Fh must be clocked into the device. After the opcode has been clocked in, the device will begin outputting the identification data on the SO pin during the subsequent clock cycles. The first byte to be output will be the Manufacturer ID, followed by two bytes of the Device ID information. The fourth byte output will be the Extended Device Information (EDI) String Length, which will be 01h indicating that one byte of EDI data follows. After the one byte of EDI data is output, the SO pin will go into a high-impedance state; therefore, additional clock cycles will have no affect on the SO pin and no data will be output. As indicated in the JEDEC Standard, reading the EDI String Length and any subsequent data is optional.

Deasserting the $\overline{CS}$ pin will terminate the Manufacturer and Device ID Read operation and put the SO pin into a high-impedance state. The $\overline{CS}$ pin can be deasserted at any time and does not require that a full byte of data be read.

**Table 12-1. Manufacturer and Device ID Information**

| Byte No. | Data Type | Value |
|---|---|---|
| 1 | Manufacturer ID | 1Fh |
| 2 | Device ID (Byte 1) | 26h |
| 3 | Device ID (Byte 2) | 00h |
| 4 | Extended Device Information (EDI) String Length | 01h |
| 5 | [Optional to Read] Extended Device Information Byte 1 | 00h |

**Table 12-2. Manufacturer and Device ID Details**

| Data Type | Bit 7 | Bit 6 | Bit 5 | Bit 4 | Bit 3 | Bit 2 | Bit 1 | Bit 0 | Hex Value | Details |
|---|---|---|---|---|---|---|---|---|---|---|
| Manufacturer ID | JEDEC Assigned Code | | | | | | | | 1Fh | JEDEC code: 0001 1111 (1Fh for Adesto) |
| | 0 | 0 | 0 | 1 | 1 | 1 | 1 | 1 | | |
| Device ID (Byte 1) | Family Code | | | Density Code | | | | | 26h | Family code: 001 (AT45Dxxx Family)<br>Density code: 00110 (16-Mbit) |
| | 0 | 0 | 1 | 0 | 0 | 1 | 1 | 0 | | |
| Device ID (Byte 2) | Sub Code | | | Product Variant | | | | | 00h | Sub code: 000 (Standard Series)<br>Product variant:00000 |
| | 0 | 0 | 0 | 0 | 0 | 0 | 0 | 0 | | |

**Table 12-3. EDI Data**

| Byte Number | Bit 7 | Bit 6 | Bit 5 | Bit 4 | Bit 3 | Bit 2 | Bit 1 | Bit 0 | Hex Value | Details |
|---|---|---|---|---|---|---|---|---|---|---|
| 1 | RFU | | | Device Revision | | | | | 00h | RFU: Reserved for Future Use<br>Device revision:00000 (Initial Version) |
| | 0 | 0 | 0 | 0 | 0 | 0 | 0 | 0 | | |

**Figure 12-1. Read Manufacturer and Device ID**

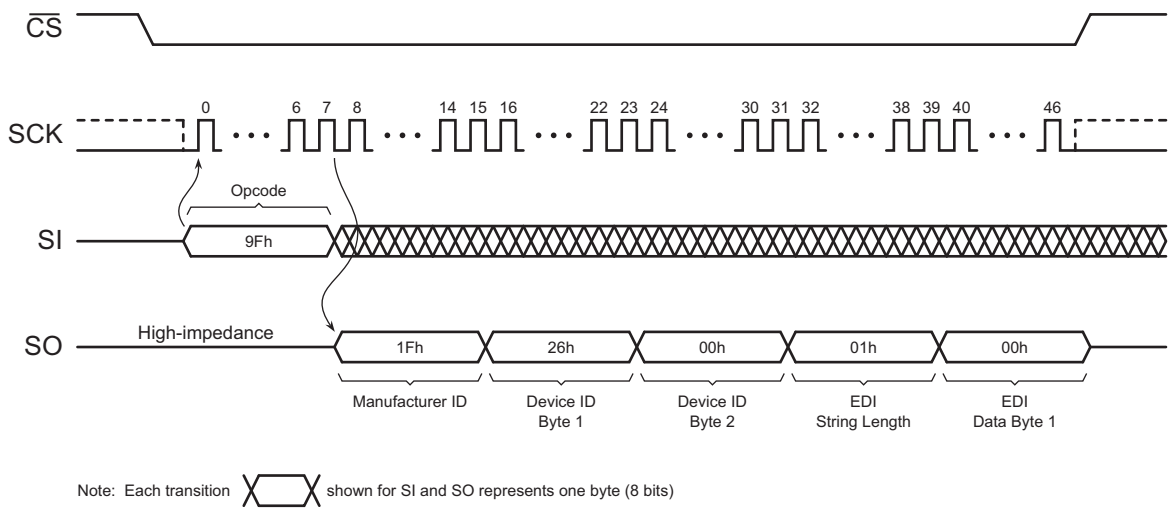

# 13. Software Reset

In some applications, it may be necessary to prematurely terminate a program or erase cycle early rather than wait the hundreds of microseconds or milliseconds necessary for the program or erase operation to complete normally. The Software Reset command allows a program or erase operation in progress to be ended abruptly and returns the device to an idle state.

To perform a Software Reset, the $\overline{CS}$ pin must be asserted and a 4-byte command sequence of F0h, 00h, 00h, and 00h must be clocked into the device. Any additional data clocked into the device after the last byte will be ignored. When the $\overline{CS}$ pin is deasserted, the program or erase operation currently in progress will be terminated within a time $t_{SWRST}$. Since the program or erase operation may not complete before the device is reset, the contents of the page being programmed or erased cannot be guaranteed to be valid.

The Software Reset command has no effect on the states of the Sector Protection Register or the buffer and page size configuration.

The complete 4-byte opcode must be clocked into the device before the $\overline{CS}$ pin is deasserted, and the $\overline{CS}$ pin must be deasserted on a byte boundary (multiples of eight bits); otherwise, no reset operation will be performed.

**Table 13-1. Software Reset**

| Command | Byte 1 | Byte 2 | Byte 3 | Byte 4 |
|---|---|---|---|---|
| Software Reset | F0h | 00h | 00h | 00h |

**Figure 13-1. Software Reset**

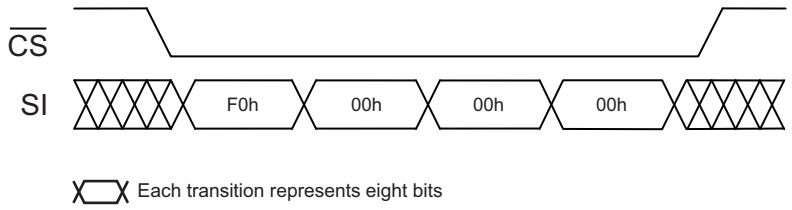

# 14. Operation Mode Summary

The commands described previously can be grouped into four different categories to better describe which commands can be executed at what times.

**Group A commands consist of:**

1. Main Memory Page Read
2. Continuous Array Read (SPI)
3. Read Sector Protection Register
4. Read Security Register
5. Buffer 1 (or 2) Read

**Group B commands consist of:**

1. Page Erase
2. Block Erase
3. Sector Erase
4. Chip Erase
5. Main Memory Page to Buffer 1 (or 2) Transfer
6. Main Memory Page to Buffer 1 (or 2) Compare
7. Buffer 1 (or 2) to Main Memory Page Program with Built-In Erase
8. Buffer 1 (or 2) to Main Memory Page Program without Built-In Erase
9. Main Memory Page Program through Buffer 1 (or 2) with Built-In Erase
10. Main Memory Byte/Page Program through Buffer 1 without Built-In Erase
11. Auto Page Rewrite

**Group C commands consist of:**

1. Buffer 1 (or 2) Write
2. Status Register Read
3. Manufacturer and Device ID Read

**Group D commands consist of:**

1. Erase Sector Protection Register
2. Program Sector Protection Register
3. Buffer and Page Size Configuration

If a Group A command is in progress (not fully completed), then another command in Group A, B, C, or D should not be started. However, during the internally self-timed portion of Group B commands, any command in Group C can be executed. The Group B commands using Buffer 1 should use Group C commands using Buffer 2 and vice versa. Finally, during the internally self-timed portion of a Group D command, only the Status Register Read command should be executed.

# 15. Command Tables

**Table 15-1. Read Commands**

| Command | Opcode |
|---|---|
| Main Memory Page Read | D2h |
| Continuous Array Read (Low Power Mode) | 01h |
| Continuous Array Read (Low Frequency) | 03h |
| Continuous Array Read (High Frequency) | 0Bh |
| Continuous Array Read (High Frequency) | 1Bh |
| Continuous Array Read (Legacy Command – Not Recommended for New Designs) | E8h |
| Buffer 1 Read (Low Frequency) | D1h |
| Buffer 2 Read (Low Frequency) | D3h |
| Buffer 1 Read (High Frequency) | D4h |
| Buffer 2 Read (High Frequency) | D6h |

**Table 15-2. Program and Erase Commands**

| Command | Opcode |
|---|---|
| Buffer 1 Write | 84h |
| Buffer 2 Write | 87h |
| Buffer 1 to Main Memory Page Program with Built-In Erase | 83h |
| Buffer 2 to Main Memory Page Program with Built-In Erase | 86h |
| Buffer 1 to Main Memory Page Program without Built-In Erase | 88h |
| Buffer 2 to Main Memory Page Program without Built-In Erase | 89h |
| Main Memory Page Program through Buffer 1 with Built-In Erase | 82h |
| Main Memory Page Program through Buffer 2 with Built-In Erase | 85h |
| Main Memory Byte/Page Program through Buffer 1 without Built-In Erase | 02h |
| Page Erase | 81h |
| Block Erase | 50h |
| Sector Erase | 7Ch |
| Chip Erase | C7h + 94h + 80h + 9Ah |
| Read-Modify-Write through Buffer 1 | 58h |
| Read-Modify-Write through Buffer 2 | 59h |

**Table 15-3. Protection and Security Commands**

| Command | Opcode |
|---|---|
| Enable Sector Protection | 3Dh + 2Ah + 7Fh + A9h |
| Disable Sector Protection | 3Dh + 2Ah + 7Fh + 9Ah |
| Erase Sector Protection Register | 3Dh + 2Ah + 7Fh + CFh |
| Program Sector Protection Register | 3Dh + 2Ah + 7Fh + FCh |
| Read Sector Protection Register | 32h |
| Read Security Register | 77h |

**Table 15-4. Additional Commands**

| Command | Opcode |
|---|---|
| Main Memory Page to Buffer 1 Transfer | 53h |
| Main Memory Page to Buffer 2 Transfer | 55h |
| Main Memory Page to Buffer 1 Compare | 60h |
| Main Memory Page to Buffer 2 Compare | 61h |
| Auto Page Rewrite through Buffer 1 | 58h |
| Auto Page Rewrite through Buffer 2 | 59h |
| Deep Power-Down | B9h |
| Resume from Deep Power-Down | ABh |
| Ultra-Deep Power-Down | 79h |
| Status Register Read | D7h |
| Manufacturer and Device ID Read | 9Fh |
| Configure Default (512 Byte) Page Size | 3Dh + 2Ah + 80h + A6h |
| Configure Optional (528 Byte) Page Size | 3Dh + 2Ah + 80h + A7h |
| Software Reset | F0h + 00h + 00h + 00h |

**Table 15-5. Legacy Commands**[1]

| Command | Opcode |
|---|---|
| Buffer 1 Read | 54H |
| Buffer 2 Read | 56H |
| Main Memory Page Read | 52H |
| Continuous Array Read | 68H |
| Status Register Read | 57H |

Note: 1. Legacy commands are not recommended for new designs.

**Table 15-6. Detailed Bit-level Addressing Sequence for Default Page Size (512 bytes)**

| Page Size = 512 bytes | | | | | | | | | Address Byte | | | | | | | | Address Byte | | | | | | | | Address Byte | | | | | | | | Additional Dummy Bytes |
|---|---|---|---|---|---|---|---|---|---|---|---|---|---|---|---|---|---|---|---|---|---|---|---|---|---|---|---|---|---|---|---|---|---|
| Opcode | Opcode | | | | | | | | Reserved | Reserved | Reserved | A20 | A19 | A18 | A17 | A16 | A15 | A14 | A13 | A12 | A11 | A10 | A9 | A8 | A7 | A6 | A5 | A4 | A3 | A2 | A1 | A0 | |
| 01h | 0 | 0 | 0 | 0 | 0 | 0 | 0 | 1 | X | X | X | A | A | A | A | A | A | A | A | A | A | A | A | A | A | A | A | A | A | A | A | A | N/A |
| 02h | 0 | 0 | 0 | 0 | 0 | 0 | 1 | 0 | X | X | X | A | A | A | A | A | A | A | A | A | A | A | A | A | A | A | A | A | A | A | A | A | N/A |
| 03h | 0 | 0 | 0 | 0 | 0 | 0 | 1 | 1 | X | X | X | A | A | A | A | A | A | A | A | A | A | A | A | A | A | A | A | A | A | A | A | A | N/A |
| 0Bh | 0 | 0 | 0 | 0 | 1 | 0 | 1 | 1 | X | X | X | A | A | A | A | A | A | A | A | A | A | A | A | A | A | A | A | A | A | A | A | A | 1 |
| 1Bh | 0 | 0 | 0 | 1 | 1 | 0 | 1 | 1 | X | X | X | A | A | A | A | A | A | A | A | A | A | A | A | A | A | A | A | A | A | A | A | A | 2 |
| 32h | 0 | 0 | 1 | 1 | 0 | 0 | 1 | 0 | X | X | X | X | X | X | X | X | X | X | X | X | X | X | X | X | X | X | X | X | X | X | X | X | N/A |
| 50h | 0 | 1 | 0 | 1 | 0 | 0 | 0 | 0 | X | X | X | A | A | A | A | A | A | A | A | A | X | X | X | X | X | X | X | X | X | X | X | X | N/A |
| 53h | 0 | 1 | 0 | 1 | 0 | 0 | 1 | 1 | X | X | X | A | A | A | A | A | A | A | A | A | A | A | A | X | X | X | X | X | X | X | X | X | N/A |
| 55h | 0 | 1 | 0 | 1 | 0 | 1 | 0 | 1 | X | X | X | A | A | A | A | A | A | A | A | A | A | A | A | X | X | X | X | X | X | X | X | X | N/A |
| 58h (1) | 0 | 1 | 0 | 1 | 1 | 0 | 0 | 0 | X | X | X | A | A | A | A | A | A | A | A | A | A | A | A | X | X | X | X | X | X | X | X | X | N/A |
| 58h (2) | 0 | 1 | 0 | 1 | 1 | 0 | 0 | 0 | X | X | X | A | A | A | A | A | A | A | A | A | A | A | A | A | A | A | A | A | A | A | A | A | N/A |
| 59h (1) | 0 | 1 | 0 | 1 | 1 | 0 | 0 | 1 | X | X | X | A | A | A | A | A | A | A | A | A | A | A | A | X | X | X | X | X | X | X | X | X | N/A |
| 59h (2) | 0 | 1 | 0 | 1 | 1 | 0 | 0 | 1 | X | X | X | A | A | A | A | A | A | A | A | A | A | A | A | A | A | A | A | A | A | A | A | A | N/A |
| 60h | 0 | 1 | 1 | 0 | 0 | 0 | 0 | 0 | X | X | X | A | A | A | A | A | A | A | A | A | A | A | A | X | X | X | X | X | X | X | X | X | N/A |
| 61h | 0 | 1 | 1 | 0 | 0 | 0 | 0 | 1 | X | X | X | A | A | A | A | A | A | A | A | A | A | A | A | X | X | X | X | X | X | X | X | X | N/A |
| 77h | 0 | 1 | 1 | 1 | 0 | 1 | 1 | 1 | X | X | X | X | X | X | X | X | X | X | X | X | X | X | X | X | X | X | X | X | X | X | X | X | N/A |
| 79h | 0 | 1 | 1 | 1 | 1 | 0 | 0 | 1 | N/A | | | | | | | | N/A | | | | | | | | N/A | | | | | | | | N/A |
| 7Ch | 0 | 1 | 1 | 1 | 1 | 1 | 0 | 0 | X | X | X | A | A | A | A | X | X | X | X | X | X | X | X | X | X | X | X | X | X | X | X | X | N/A |
| 81h | 1 | 0 | 0 | 0 | 0 | 0 | 0 | 1 | X | X | X | A | A | A | A | A | A | A | A | A | A | A | A | X | X | X | X | X | X | X | X | X | N/A |
| 82h | 1 | 0 | 0 | 0 | 0 | 0 | 1 | 0 | X | X | X | A | A | A | A | A | A | A | A | A | A | A | A | A | A | A | A | A | A | A | A | A | N/A |
| 83h | 1 | 0 | 0 | 0 | 0 | 0 | 1 | 1 | X | X | X | A | A | A | A | A | A | A | A | A | A | A | A | X | X | X | X | X | X | X | X | X | N/A |
| 84h | 1 | 0 | 0 | 0 | 0 | 1 | 0 | 0 | X | X | X | X | X | X | X | X | X | X | X | X | X | X | X | A | A | A | A | A | A | A | A | A | N/A |
| 85h | 1 | 0 | 0 | 0 | 0 | 1 | 0 | 1 | X | X | X | A | A | A | A | A | A | A | A | A | A | A | A | A | A | A | A | A | A | A | A | A | N/A |
| 86h | 1 | 0 | 0 | 0 | 0 | 1 | 1 | 0 | X | X | X | A | A | A | A | A | A | A | A | A | A | A | A | X | X | X | X | X | X | X | X | X | N/A |
| 87h | 1 | 0 | 0 | 0 | 0 | 1 | 1 | 1 | X | X | X | X | X | X | X | X | X | X | X | X | X | X | X | A | A | A | A | A | A | A | A | A | N/A |
| 88h | 1 | 0 | 0 | 0 | 1 | 0 | 0 | 0 | X | X | X | A | A | A | A | A | A | A | A | A | A | A | A | X | X | X | X | X | X | X | X | X | N/A |
| 89h | 1 | 0 | 0 | 0 | 1 | 0 | 0 | 1 | X | X | X | A | A | A | A | A | A | A | A | A | A | A | A | X | X | X | X | X | X | X | X | X | N/A |
| 9Fh | 1 | 0 | 0 | 1 | 1 | 1 | 1 | 1 | N/A | | | | | | | | N/A | | | | | | | | N/A | | | | | | | | N/A |
| B9h | 1 | 0 | 1 | 1 | 1 | 0 | 0 | 1 | N/A | | | | | | | | N/A | | | | | | | | N/A | | | | | | | | N/A |
| ABh | 1 | 0 | 1 | 0 | 1 | 0 | 1 | 1 | N/A | | | | | | | | N/A | | | | | | | | N/A | | | | | | | | N/A |
| D1h | 1 | 1 | 0 | 1 | 0 | 0 | 0 | 1 | X | X | X | X | X | X | X | X | X | X | X | X | X | X | X | A | A | A | A | A | A | A | A | A | N/A |
| D2h | 1 | 1 | 0 | 1 | 0 | 0 | 1 | 0 | X | X | X | A | A | A | A | A | A | A | A | A | A | A | A | A | A | A | A | A | A | A | A | A | 4 |
| D3h | 1 | 1 | 0 | 1 | 0 | 0 | 1 | 1 | X | X | X | X | X | X | X | X | X | X | X | X | X | X | X | A | A | A | A | A | A | A | A | A | N/A |
| D4h | 1 | 1 | 0 | 1 | 0 | 1 | 0 | 0 | X | X | X | X | X | X | X | X | X | X | X | X | X | X | X | A | A | A | A | A | A | A | A | A | 1 |
| D6h | 1 | 1 | 0 | 1 | 0 | 1 | 1 | 0 | X | X | X | X | X | X | X | X | X | X | X | X | X | X | X | A | A | A | A | A | A | A | A | A | 1 |
| D7h | 1 | 1 | 0 | 1 | 0 | 1 | 1 | 1 | N/A | | | | | | | | N/A | | | | | | | | N/A | | | | | | | | N/A |

1. Shown to indicate when Auto Page Rewrite Operation is executed.
2. Shown to indicate when Read Modify Write Operation is executed.

Note: X = Dummy Bit

**Table 15-7. Detailed Bit-level Addressing Sequence for Optional Page Size (528 bytes)**

| Page Size = 528-bytes | | | | | | | | | Address Byte | | | | | | | | Address Byte | | | | | | | | Address Byte | | | | | | | | Additional Dummy Bytes |
|---|---|---|---|---|---|---|---|---|---|---|---|---|---|---|---|---|---|---|---|---|---|---|---|---|---|---|---|---|---|---|---|---|---|
| Opcode | Opcode | | | | | | | | Reserved | Reserved | PA11 | PA10 | PA9 | PA8 | PA7 | PA6 | PA5 | PA4 | PA3 | PA2 | PA1 | PA0 | BA9 | BA8 | BA7 | BA6 | BA5 | BA4 | BA3 | BA2 | BA1 | BA0 | |
| 01h | 0 | 0 | 0 | 0 | 0 | 0 | 0 | 1 | X | X | P | P | P | P | P | P | P | P | P | P | P | P | B | B | B | B | B | B | B | B | B | B | N/A |
| 02h | 0 | 0 | 0 | 0 | 0 | 0 | 1 | 0 | X | X | P | P | P | P | P | P | P | P | P | P | P | P | B | B | B | B | B | B | B | B | B | B | N/A |
| 03h | 0 | 0 | 0 | 0 | 0 | 0 | 1 | 1 | X | X | P | P | P | P | P | P | P | P | P | P | P | P | B | B | B | B | B | B | B | B | B | B | N/A |
| 0Bh | 0 | 0 | 0 | 0 | 1 | 0 | 1 | 1 | X | X | P | P | P | P | P | P | P | P | P | P | P | P | B | B | B | B | B | B | B | B | B | B | 1 |
| 1Bh | 0 | 0 | 0 | 1 | 1 | 0 | 1 | 1 | X | X | P | P | P | P | P | P | P | P | P | P | P | P | B | B | B | B | B | B | B | B | B | B | 2 |
| 32h | 0 | 0 | 1 | 1 | 0 | 0 | 1 | 0 | X | X | X | X | X | X | X | X | X | X | X | X | X | X | X | X | X | X | X | X | X | X | X | X | N/A |
| 50h | 0 | 1 | 0 | 1 | 0 | 0 | 0 | 0 | X | X | P | P | P | P | P | P | P | P | P | X | X | X | X | X | X | X | X | X | X | X | X | X | N/A |
| 53h | 0 | 1 | 0 | 1 | 0 | 0 | 1 | 1 | X | X | P | P | P | P | P | P | P | P | P | P | P | P | X | X | X | X | X | X | X | X | X | X | N/A |
| 55h | 0 | 1 | 0 | 1 | 0 | 1 | 0 | 1 | X | X | P | P | P | P | P | P | P | P | P | P | P | P | X | X | X | X | X | X | X | X | X | X | N/A |
| 58h (1) | 0 | 1 | 0 | 1 | 1 | 0 | 0 | 0 | X | X | P | P | P | P | P | P | P | P | P | P | P | P | X | X | X | X | X | X | X | X | X | X | N/A |
| 58h (2) | 0 | 1 | 0 | 1 | 1 | 0 | 0 | 0 | X | X | P | P | P | P | P | P | P | P | P | P | P | P | B | B | B | B | B | B | B | B | B | B | N/A |
| 59h(1) | 0 | 1 | 0 | 1 | 1 | 0 | 0 | 1 | X | X | P | P | P | P | P | P | P | P | P | P | P | P | X | X | X | X | X | X | X | X | X | X | N/A |
| 59h(2) | 0 | 1 | 0 | 1 | 1 | 0 | 0 | 1 | X | X | P | P | P | P | P | P | P | P | P | P | P | P | B | B | B | B | B | B | B | B | B | B | N/A |
| 60h | 0 | 1 | 1 | 0 | 0 | 0 | 0 | 0 | X | X | P | P | P | P | P | P | P | P | P | P | P | P | X | X | X | X | X | X | X | X | X | X | N/A |
| 61h | 0 | 1 | 1 | 0 | 0 | 0 | 0 | 1 | X | X | P | P | P | P | P | P | P | P | P | P | P | P | X | X | X | X | X | X | X | X | X | X | N/A |
| 77h | 0 | 1 | 1 | 1 | 0 | 1 | 1 | 1 | X | X | X | X | X | X | X | X | X | X | X | X | X | X | X | X | X | X | X | X | X | X | X | X | N/A |
| 79h | 0 | 1 | 1 | 1 | 1 | 0 | 0 | 1 | N/A | | | | | | | | N/A | | | | | | | | N/A | | | | | | | | N/A |
| 7Ch | 0 | 1 | 1 | 1 | 1 | 1 | 0 | 0 | X | X | P | P | P | P | X | X | X | X | X | X | X | X | X | X | X | X | X | X | X | X | X | X | N/A |
| 81h | 1 | 0 | 0 | 0 | 0 | 0 | 0 | 1 | X | X | P | P | P | P | P | P | P | P | P | P | P | P | X | X | X | X | X | X | X | X | X | X | N/A |
| 82h | 1 | 0 | 0 | 0 | 0 | 0 | 1 | 0 | X | X | P | P | P | P | P | P | P | P | P | P | P | P | B | B | B | B | B | B | B | B | B | B | N/A |
| 83h | 1 | 0 | 0 | 0 | 0 | 0 | 1 | 1 | X | X | P | P | P | P | P | P | P | P | P | P | P | P | X | X | X | X | X | X | X | X | X | X | N/A |
| 84h | 1 | 0 | 0 | 0 | 0 | 1 | 0 | 0 | X | X | X | X | X | X | X | X | X | X | X | X | X | X | B | B | B | B | B | B | B | B | B | B | N/A |
| 85h | 1 | 0 | 0 | 0 | 0 | 1 | 0 | 1 | X | X | P | P | P | P | P | P | P | P | P | P | P | P | B | B | B | B | B | B | B | B | B | B | N/A |
| 86h | 1 | 0 | 0 | 0 | 0 | 1 | 1 | 0 | X | X | P | P | P | P | P | P | P | P | P | P | P | P | X | X | X | X | X | X | X | X | X | X | N/A |
| 87h | 1 | 0 | 0 | 0 | 0 | 1 | 1 | 1 | X | X | X | X | X | X | X | X | X | X | X | X | X | X | B | B | B | B | B | B | B | B | B | B | N/A |
| 88h | 1 | 0 | 0 | 0 | 1 | 0 | 0 | 0 | X | X | P | P | P | P | P | P | P | P | P | P | P | P | X | X | X | X | X | X | X | X | X | X | N/A |
| 89h | 1 | 0 | 0 | 0 | 1 | 0 | 0 | 1 | X | X | P | P | P | P | P | P | P | P | P | P | P | P | X | X | X | X | X | X | X | X | X | X | N/A |
| 9Fh | 1 | 0 | 0 | 1 | 1 | 1 | 1 | 1 | N/A | | | | | | | | N/A | | | | | | | | N/A | | | | | | | | N/A |
| B9h | 1 | 0 | 1 | 1 | 1 | 0 | 0 | 1 | N/A | | | | | | | | N/A | | | | | | | | N/A | | | | | | | | N/A |
| ABh | 1 | 0 | 1 | 0 | 1 | 0 | 1 | 1 | N/A | | | | | | | | N/A | | | | | | | | N/A | | | | | | | | N/A |
| D1h | 1 | 1 | 0 | 1 | 0 | 0 | 0 | 1 | X | X | X | X | X | X | X | X | X | X | X | X | X | X | B | B | B | B | B | B | B | B | B | B | N/A |
| D2h | 1 | 1 | 0 | 1 | 0 | 0 | 1 | 0 | X | X | P | P | P | P | P | P | P | P | P | P | P | P | B | B | B | B | B | B | B | B | B | B | 4 |
| D3h | 1 | 1 | 0 | 1 | 0 | 0 | 0 | 1 | X | X | X | X | X | X | X | X | X | X | X | X | X | X | B | B | B | B | B | B | B | B | B | B | N/A |
| D4h | 1 | 1 | 0 | 1 | 0 | 1 | 0 | 0 | X | X | X | X | X | X | X | X | X | X | X | X | X | X | B | B | B | B | B | B | B | B | B | B | 1 |
| D6h | 1 | 1 | 0 | 1 | 0 | 1 | 1 | 0 | X | X | X | X | X | X | X | X | X | X | X | X | X | X | B | B | B | B | B | B | B | B | B | B | 1 |
| D7h | 1 | 1 | 0 | 1 | 0 | 1 | 1 | 1 | N/A | | | | | | | | N/A | | | | | | | | N/A | | | | | | | | N/A |

1. Shown to indicate when Auto Page Rewrite Operation is executed.
2. Shown to indicate when Read Modify Write Operation is executed.

Note: P = Page Address Bit B = Byte/Buffer Address Bit X = Dummy Bit

# 16. Power-On/Reset State

When power is first applied to the device, or when recovering from a reset condition, the device will default to SPI Mode 3. In addition, the output pin (SO) will be in a high impedance state, and a high-to-low transition on the $\overline{CS}$ pin will be required to start a valid instruction. The SPI mode (Mode 3 or Mode 0) will be automatically selected on every falling edge of $\overline{CS}$ by sampling the inactive clock state.

## 16.1 Initial Power-Up Timing Restrictions

As the device initializes, there will be a transient current demand. The system needs to be capable of providing this current to ensure correct initialization. During power-up, the device must not be accessed for at least the minimum $t_{VCSL}$ time after the supply voltage reaches the minimum $V_{CC}$ level. While the device is being powered-up, the internal Power-On Reset (POR) circuitry keeps the device in a reset mode until the supply voltage rises above the maximum POR threshold value ($V_{POR}$). During this time, all operations are disabled and the device will not respond to any commands. After power-up, the device will be in the standby mode.

If the first operation to the device after power-up will be a program or erase operation, then the operation cannot be started until the supply voltage reaches the minimum $V_{CC}$ level and an internal device delay has elapsed. This delay will be a maximum time of $t_{PUW}$.

**Table 16-1. Power-Up Timing**

| Symbol | Parameter | Min | Max | Units |
|---|---|---|---|---|
| $t_{VCSL}$ | Minimum $V_{CC}$ to Chip Select Low Time | 70 | | µs |
| $t_{PUW}$ | Power-Up Device Delay Before Program or Erase Allowed | | 3 | ms |
| $V_{POR}$ | Power-On Reset (POR) Voltage | 1.5 | 2.2 | V |

**Figure 16-1. Power-Up Timing**

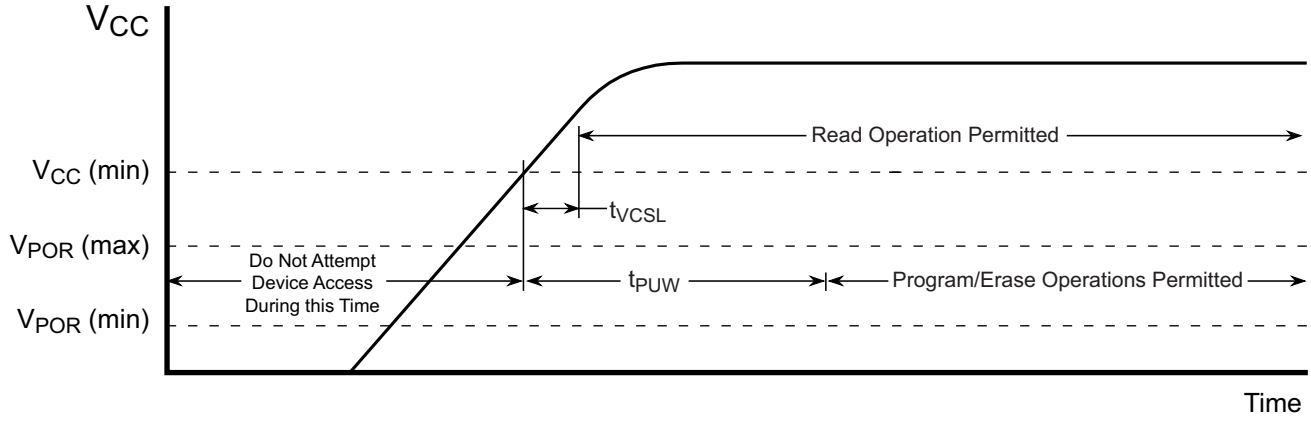

# 17. System Considerations

The serial interface is controlled by the Serial Clock (SCK), Serial Input (SI), and Chip Select ($\overline{CS}$) pins. These signals must rise and fall monotonically and be free from noise. Excessive noise or ringing on these pins can be misinterpreted as multiple edges and cause improper operation of the device. PCB traces must be kept to a minimum distance or appropriately terminated to ensure proper operation. If necessary, decoupling capacitors can be added on these pins to provide filtering against noise glitches.

As system complexity continues to increase, voltage regulation is becoming more important. A key element of any voltage regulation scheme is its current sourcing capability. Like all Flash memories, the peak current for DataFlash-L devices occurs during the programming and erasing operations. The supply voltage regulator needs to be able to supply this peak current requirement. An under specified regulator can cause current starvation. Besides increasing system noise, current starvation during programming or erasing can lead to improper operation and possible data corruption.

# 18. Electrical Specifications

## 18.1 Absolute Maximum Ratings*

Temperature under Bias . . . . . -55°C to +125°C

Storage Temperature. . . . . -65°C to +150°C

Absolute Maximum $V_{cc}$ . . . . . .3.96V

All Output Voltages with Respect to Ground
. . . . . -0.6V to 4.2V (Max $V_{CC}$ of 3.6V + 0.6V)

All Input Voltages with Respect to Ground
(excluding $V_{CC}$ pin, including NC pins)
. . . . . -0.6V to 4.2V (Max $V_{CC}$ of 3.6V + 0.6V)

*Notice: Stresses beyond those listed under “Absolute Maximum Ratings” may cause permanent damage to the device. This is a stress rating only and functional operation of the device at these or any other conditions beyond those indicated in the operational sections of this specification is not implied. Exposure to absolute maximum rating conditions for extended periods may affect device reliability.Voltage extremes referenced in the “Absolute Maximum Ratings” are intended to accommodate short duration undershoot/overshoot conditions and does not imply or guarantee functional device operation at these levels for any extended period of time.

## 18.2 DC and AC Operating Range

| | | AT25PE16<br>2.3V |
|---|---|---|
| Operating Temperature (Case) | Industrial | -40°C to 85°C |
| $V_{CC}$ Power Supply | | 2.3V to 3.6V |

## 18.3 DC Characteristics

| Symbol | Parameter | Condition | Min | Typ | Max | Units |
|---|---|---|---|---|---|---|
| $I_{UDPD}$ | Ultra-Deep Power-Down Current | $\overline{CS}$= $V_{CC}$. All other inputs at 0V or $V_{CC}$ | | 0.4 | 1 | µA |
| $I_{DPD}$ | Deep Power-Down Current | $\overline{CS}$= $V_{CC}$. All other inputs at 0V or $V_{CC}$ | | 5 | 12 | µA |
| $I_{SB}$ | Standby Current | $\overline{CS}$= $V_{CC}$. All other inputs at 0V or $V_{CC}$ | | 25 | 50 | µA |
| $I_{CC1}$ | Active Current, Low Power Read (01h) Operation | f = 1MHz; $I_{OUT}$ = 0mA | | 6 | 9 | mA |
| | | f = 15MHz; $I_{OUT}$ = 0mA | | 7 | 11 | mA |
| $I_{CC2}$(1) | Active Current, Read Operation | f = 50MHz; $I_{OUT}$ = 0mA | | 12 | 17 | mA |
| | | f = 85MHz; $I_{OUT}$ = 0mA | | 16 | 22 | mA |
| $I_{CC3}$ | Active Current, Program Operation | $\overline{CS}$=$V_{CC}$ | | 12 | 18 | mA |
| $I_{CC4}$ | Active Current, Erase Operation | $\overline{CS}$=$V_{CC}$ | | 12 | 18 | mA |
| $I_{LI}$ | Input Load Current | All inputs at CMOS levels | | | 1 | µA |
| $I_{LO}$ | Output Leakage Current | All inputs at CMOS levels | | | 1 | µA |
| $V_{IL}$ | Input Low Voltage | | | | $V_{CC}$ x 0.3 | V |
| $V_{IH}$ | Input High Voltage | | $V_{CC}$ x 0.7 | | $V_{CC}$ + 0.6 | V |
| $V_{OL}$ | Output Low Voltage | $I_{OL}$ = 100µA | | | 0.4 | V |
| $V_{OH}$ | Output High Voltage | $I_{OH}$ = -100µA | $V_{CC}$ - 0.2V | | | V |

Notes: 1. Typical values measured at 3.0V at 25°C.

## 18.4 AC Characteristics

| Symbol | Parameter | AT25PE16 2.3V | | |
|---|---|---|---|---|
| | | Min | Max | Units |
| $f_{SCK}$ | SCK Frequency | | 70 | MHz |
| $f_{CAR1}$ | SCK Frequency for Continuous Read (0x0B) | | 85 | MHz |
| $f_{CAR2}$ | SCK Frequency for Continuous Read (0x03) (Low Frequency) | | 50 | MHz |
| $f_{CAR3}$ | SCK Frequency for Continuous Read (Low Power Mode – 01h Opcode) | | 15 | MHz |
| $f_{CAR4}$ | SCK Frequency for Continuous Read (0x1B) | | 104 | MHz |
| $t_{WH}$ | SCK High Time | 4 | | ns |
| $t_{WL}$ | SCK Low Time | 4 | | ns |
| $t_{SCKR}$(1) | SCK Rise Time, Peak-to-peak | 0.1 | | V/ns |
| $t_{SCKF}$(1) | SCK Fall Time, Peak-to-peak | 0.1 | | V/ns |
| $t_{CS}$ | Minimum $\overline{CS}$ High Time | 20 | | ns |
| $t_{CSS}$ | $\overline{CS}$ Setup Time | 5 | | ns |
| $t_{CSH}$ | $\overline{CS}$ Hold Time | 5 | | ns |
| $t_{SU}$ | Data In Setup Time | 2 | | ns |
| $t_{H}$ | Data In Hold Time | 1 | | ns |
| $t_{HO}$ | Output Hold Time | 0 | | ns |
| $t_{DIS}$(1) | Output Disable Time | | 6 | ns |
| $t_{V}$ | Output Valid | | 7 | ns |
| $t_{WPE}$ | $\overline{WP}$ Low to Protection Enabled | | 1 | µs |
| $t_{WPD}$ | $\overline{WP}$ High to Protection Disabled | | 1 | µs |
| $t_{EUDPD}$(1) | $\overline{CS}$ High to Ultra-Deep Power-Down | | 4 | µs |
| $t_{CSLU}$ | Minimum $\overline{CS}$ Low Time to Exit Ultra-Deep Power-Down | 20 | | ns |
| $t_{XUDPD}$ | Exit Ultra-Deep Power-Down Time | | 180 | µs |
| $t_{EDPD}$(1) | $\overline{CS}$ High to Deep Power-Down | | 2 | µs |
| $t_{RDPD}$ | Resume from Deep Power-Down Time | | 35 | µs |
| $t_{XFR}$ | Page to Buffer Transfer Time | | 200 | µs |
| $t_{COMP}$ | Page to Buffer Compare Time | | 200 | µs |
| $t_{RST}$ | $\overline{RESET}$ Pulse Width | 10 | | µs |
| $t_{REC}$ | $\overline{RESET}$ Recovery Time | | 1 | µs |
| $t_{SWRST}$ | Software Reset Time | | 35 | µs |

Note: 1. Values are based on device characterization, not 100% tested in production.

## 18.5 Program and Erase Characteristics

| Symbol | Parameter | | Min | Typ | Max | Units |
|---|---|---|---|---|---|---|
| $t_{EP}$ | Page Erase and Programming Time (512/528 bytes) | | | 17 | 25* | ms |
| $t_P$ | Page Programming Time | | | 3 | 4 | ms |
| $t_{BP}$ | Byte Programming Time | | | 8 | | µs |
| $t_{PE}$ | Page Erase Time | | | 12 | 35 | ms |
| $t_{BE}$ | Block Erase Time | | | 45 | 100 | ms |
| $t_{SE}$ | Sector Erase Time | | | 1.4 | 2* | s |
| $t_{CE}$ | Chip Erase Time | | | 22 | 40 | s |

Notes: 1. Specification waiver for legacy inventory may apply.

# 19. Input Test Waveforms and Measurement Levels

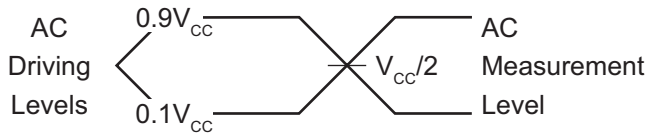


$t_R$, $t_F$ < 2ns (10% to 90%)

# 20. Output Test Load

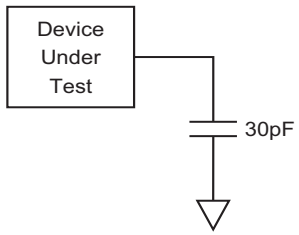

# 21. Utilizing the RapidS Function

To take advantage of the RapidS function's ability to operate at higher clock frequencies, a full clock cycle must be used to transmit data back and forth across the serial bus. The DataFlash-L is designed to always clock its data out on the falling edge of the SCK signal and clock data in on the rising edge of SCK.

For full clock cycle operation to be achieved, when the DataFlash-L is clocking data out on the falling edge of SCK, the host controller should wait until the next falling edge of SCK to latch the data in. Similarly, the host controller should clock its data out on the rising edge of SCK in order to give the DataFlash-L a full clock cycle to latch the incoming data in on the next rising edge of SCK.

**Figure 21-1. RapidS Mode**

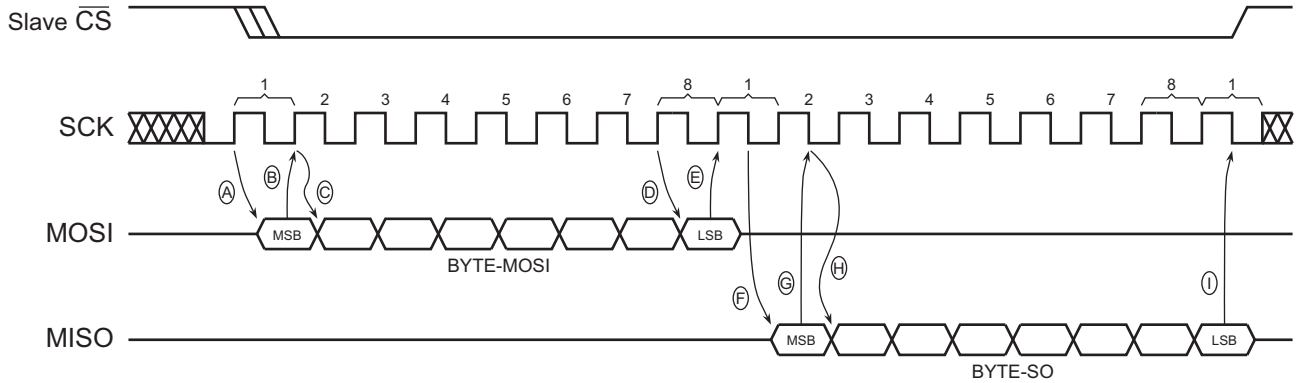


MOSI = Master Out, Slave In
MISO = Master In, Slave Out
The Master is the host controller and the Slave is the DataFlash.

The Master always clocks data out on the rising edge of SCK and always clocks data in on the falling edge of SCK.
The Slave always clocks data out on the falling edge of SCK and always clocks data in on the rising edge of SCK.

A. Master clocks out first bit of BYTE-MOSI on the rising edge of SCK
B. Slave clocks in first bit of BYTE-MOSI on the next rising edge of SCK
C. Master clocks out second bit of BYTE-MOSI on the same rising edge of SCK
D. Last bit of BYTE-MOSI is clocked out from the Master
E. Last bit of BYTE-MOSI is clocked into the slave
F. Slave clocks out first bit of BYTE-SO
G. Master clocks in first bit of BYTE-SO
H. Slave clocks out second bit of BYTE-SO
I. Master clocks in last bit of BYTE-SO

**Figure 21-2. Command Sequence for Read/Write Operations for Page Size 512 bytes**
(Except Status Register Read, Manufacturer and Device ID Read)

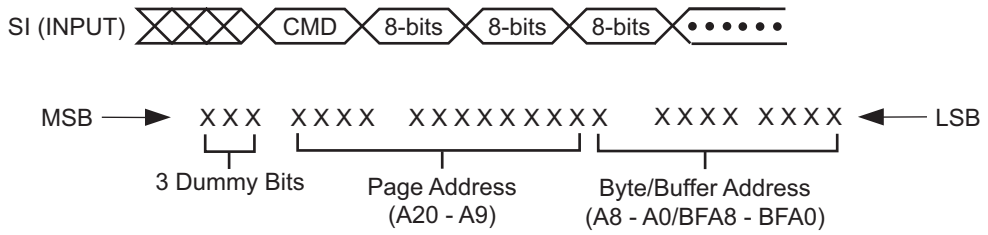


**Figure 21-3. Command Sequence for Read/Write Operations for Page Size 528 bytes**
(Except Status Register Read, Manufacturer and Device ID Read)

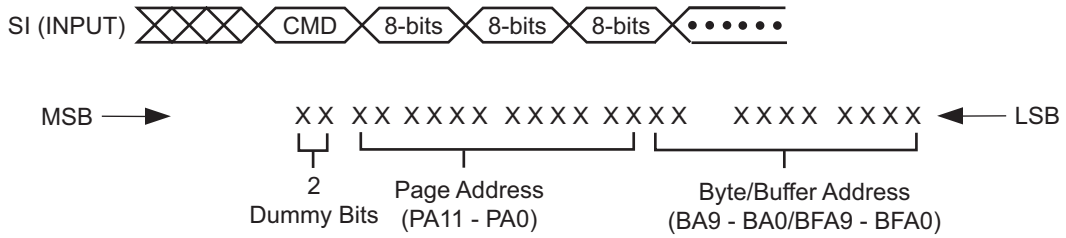

# 22. AC Waveforms

Four different timing waveforms are shown in Figure 22-1 through Figure 22-4. Waveform 1 shows the SCK signal being low when $\overline{CS}$ makes a high-to-low transition and Waveform 2 shows the SCK signal being high when $\overline{CS}$ makes a high-to-low transition. In both cases, output SO becomes valid while the SCK signal is still low (SCK low time is specified as $t_{WL}$). Timing Waveforms 1 and 2 conform to RapidS serial interface but for frequencies up to 85MHz. Waveforms 1 and 2 are compatible with SPI Mode 0 and SPI Mode 3, respectively.

Waveform 3 and 4 illustrate general timing diagram for RapidS serial interface. These are similar to Waveform 1 and 2, except that output SO is not restricted to become valid during the $t_{WL}$ period. These timing waveforms are valid over the full frequency range (maximum frequency = 85MHz) of the RapidS serial case.

**Figure 22-1. Waveform 1 = SPI Mode 0 Compatible**

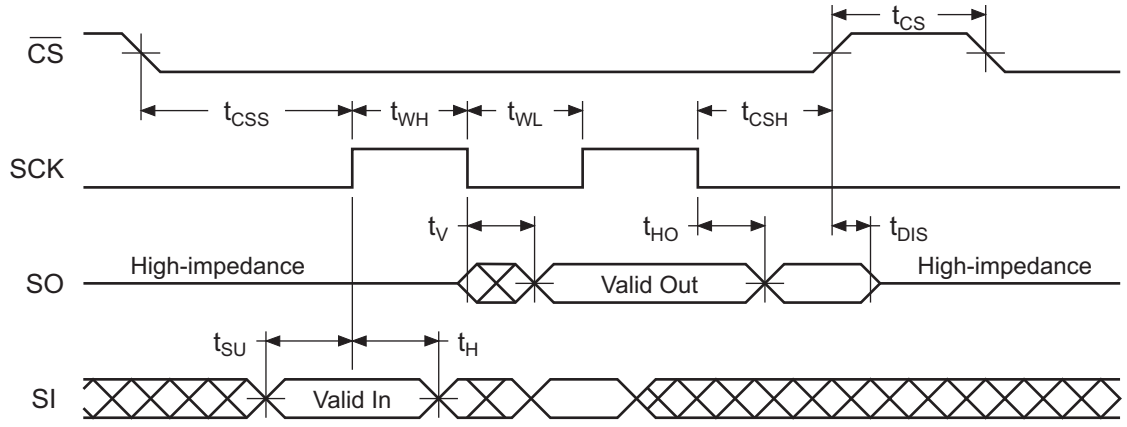


**Figure 22-2. Waveform 2 = SPI Mode 3 Compatible**

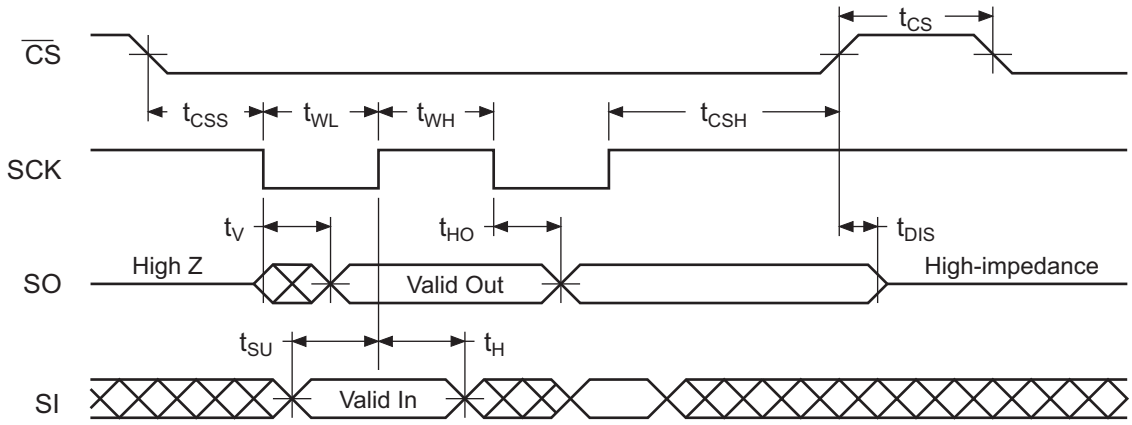

**Figure 22-3. Waveform 3 = RapidS Mode 0**

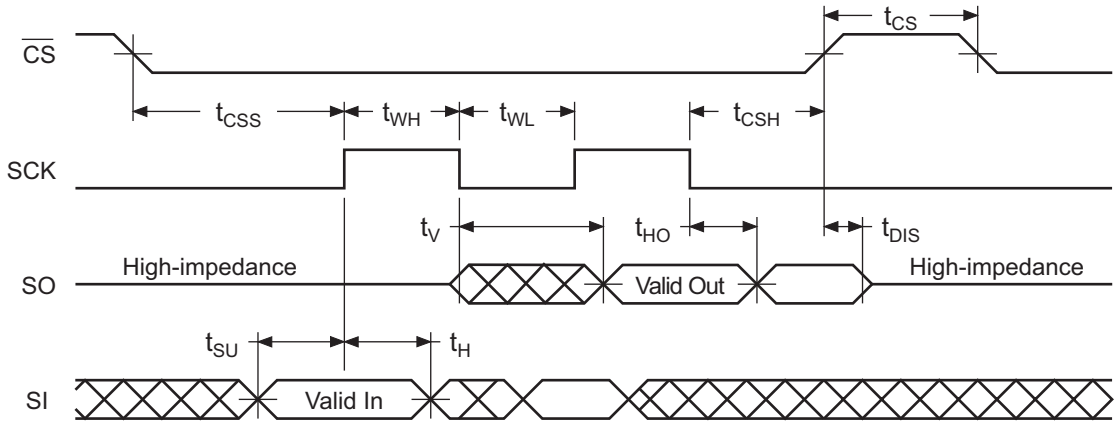


**Figure 22-4. Waveform 4 = RapidS Mode 3**

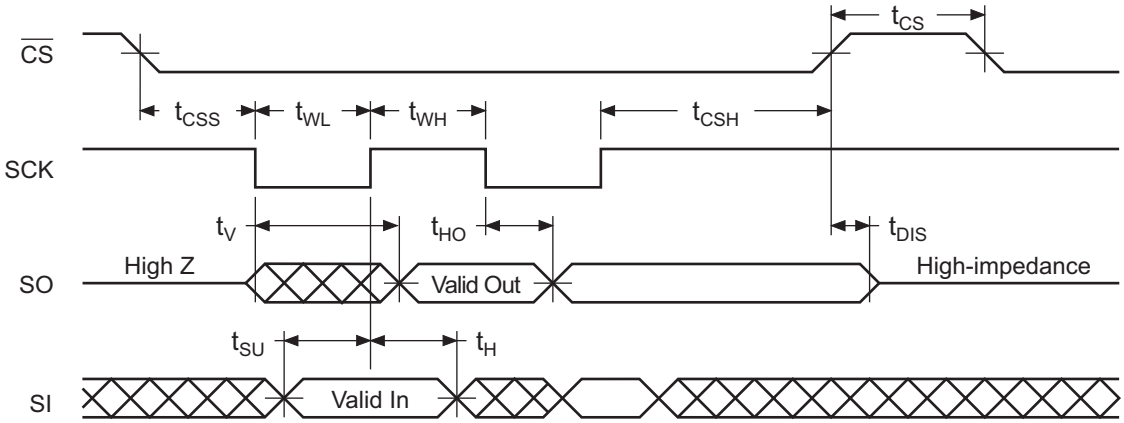

# 23. Write Operations

The following block diagram and waveforms illustrate the various write sequences available.

**Figure 23-1. Block Diagram**

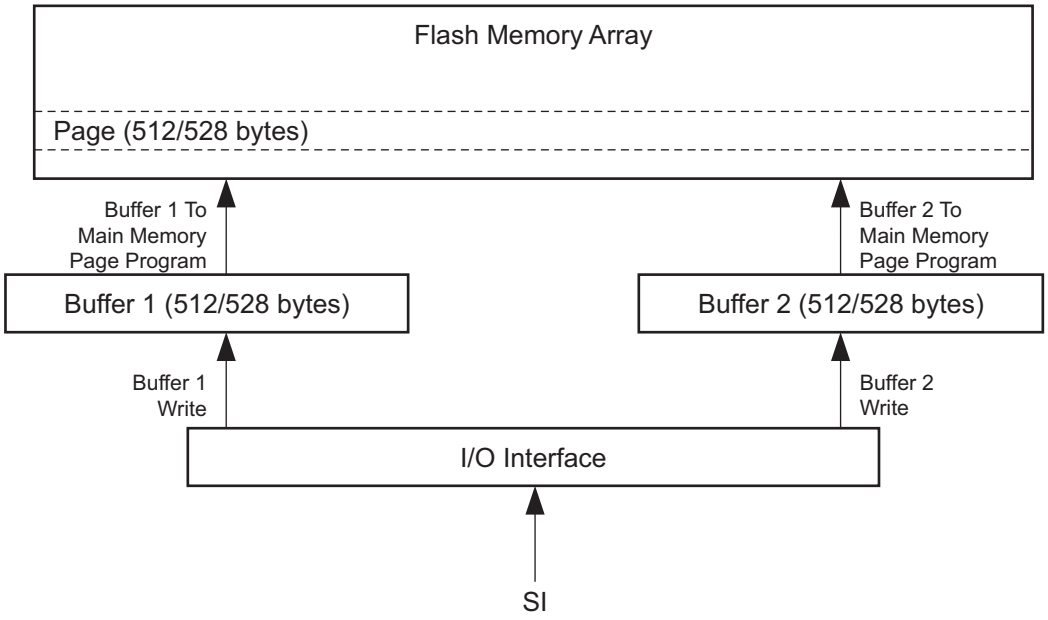


**Figure 23-2. Buffer Write**

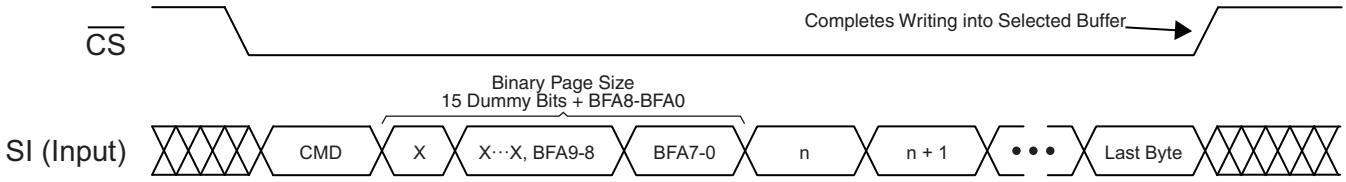


**Figure 23-3. Buffer to Main Memory Page Program**

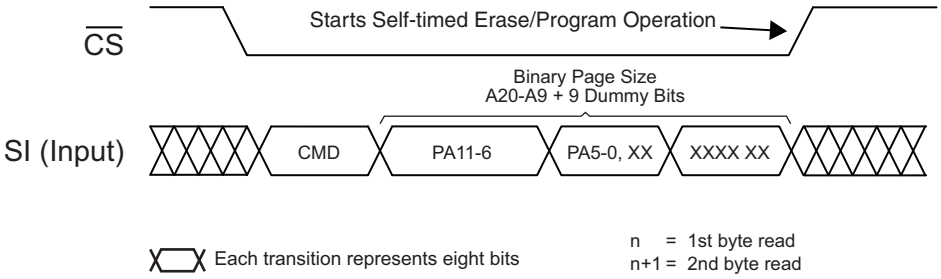

# 24. Read Operations

The following block diagram and waveforms illustrate the various read sequences available.

**Figure 24-1. Block Diagram**

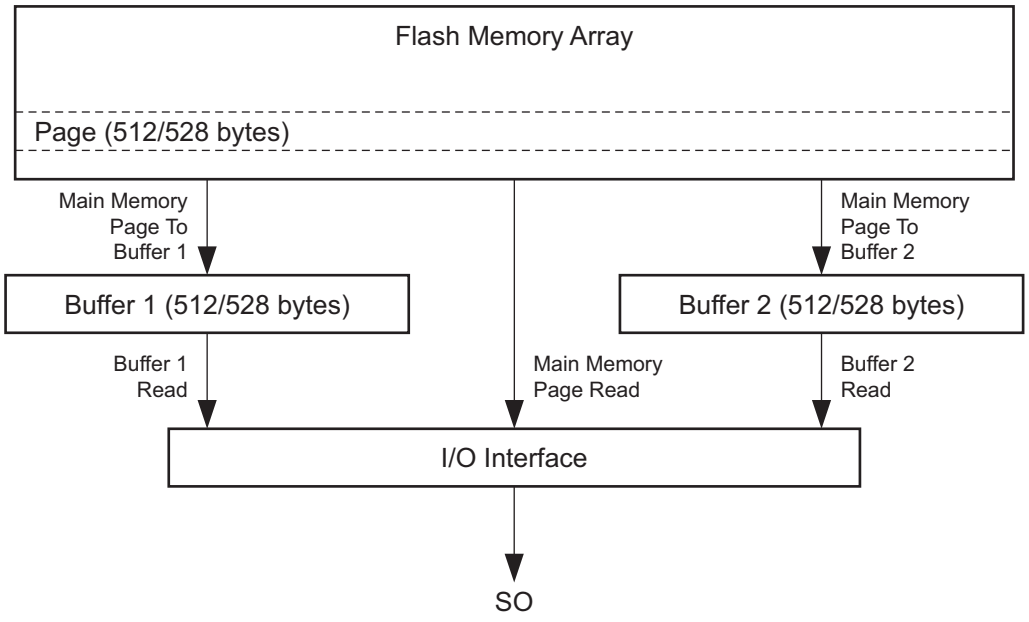


**Figure 24-2. Main Memory Page Read**

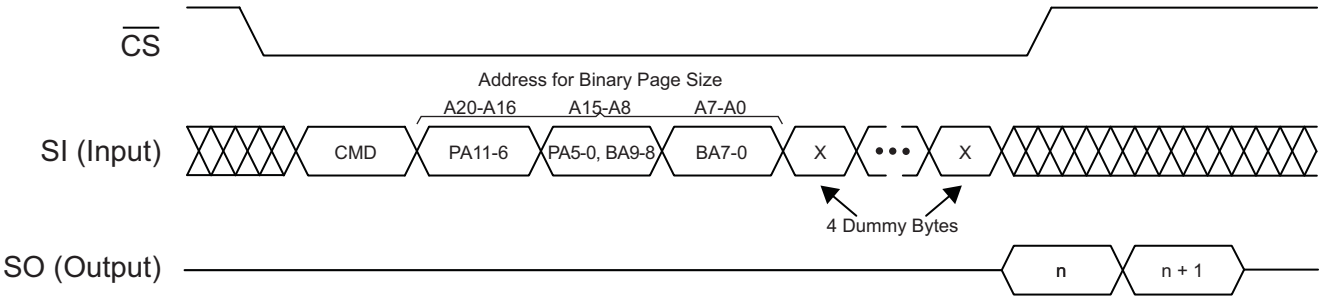

**Figure 24-3. Main Memory Page to Buffer Transfer**

Data From the selected Flash Page is read into either SRAM Buffer

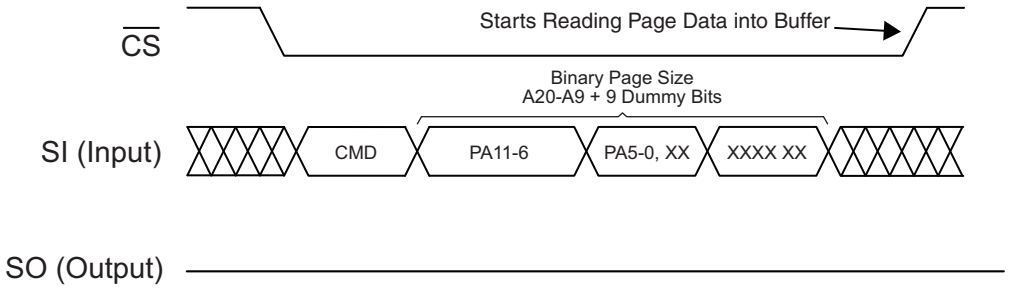


**Figure 24-4. Buffer Read**

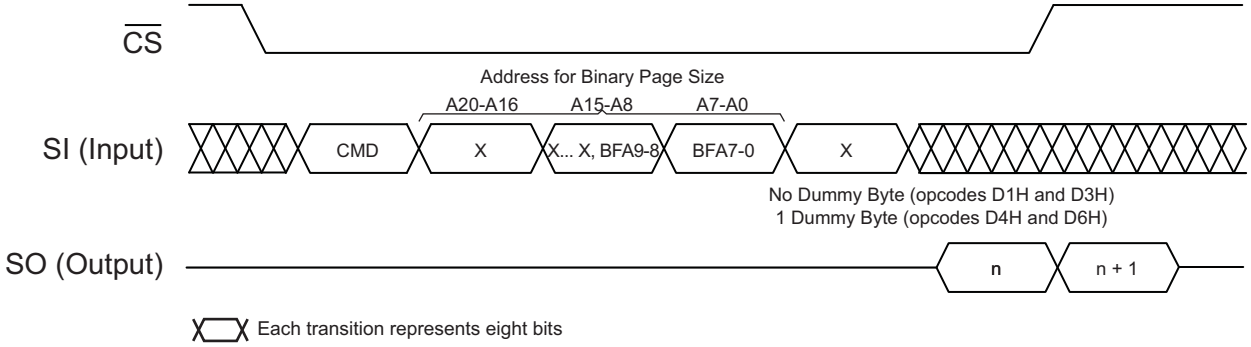

# 25. Detailed Bit-level Read Waveforms: RapidS Mode 0/Mode 3

**Figure 25-1. Continuous Array Read (Legacy Opcode E8h)**

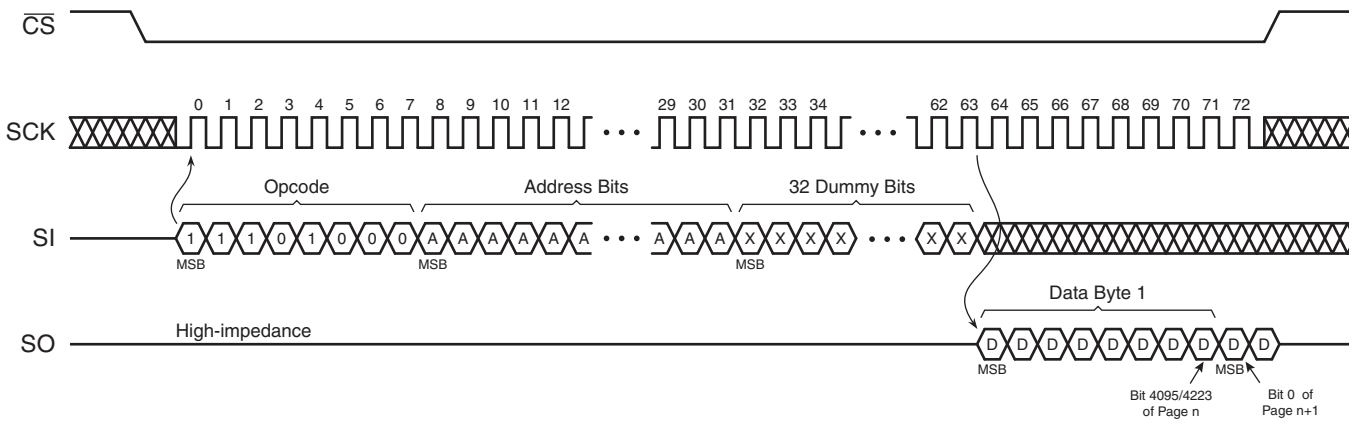


**Figure 25-2. Continuous Array Read (Opcode 0Bh)**

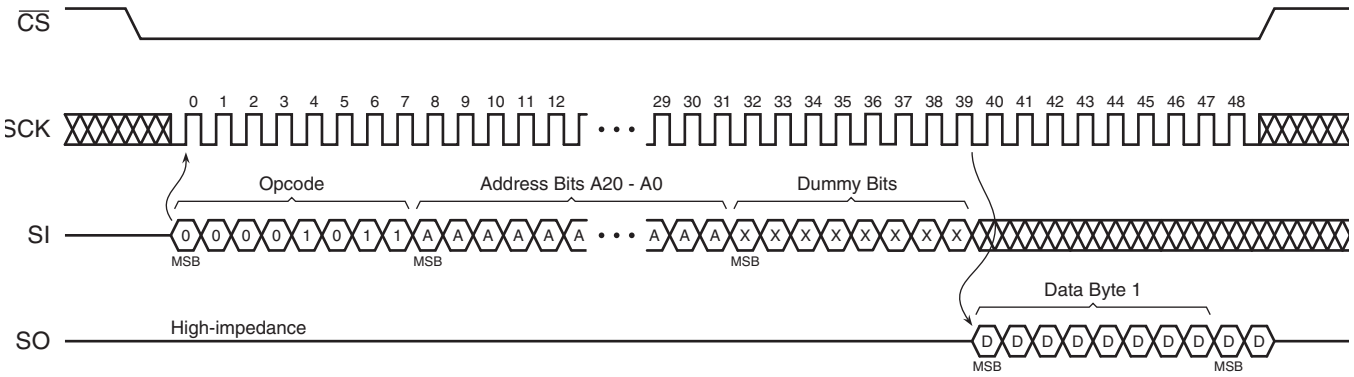


**Figure 25-3. Continuous Array Read (Opcode 01h or 03h)**

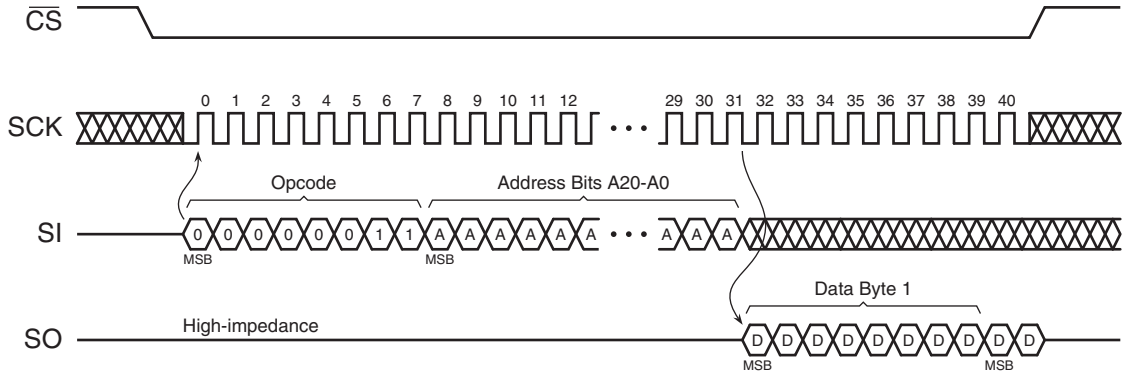

**Figure 25-4. Main Memory Page Read (Opcode D2h)**

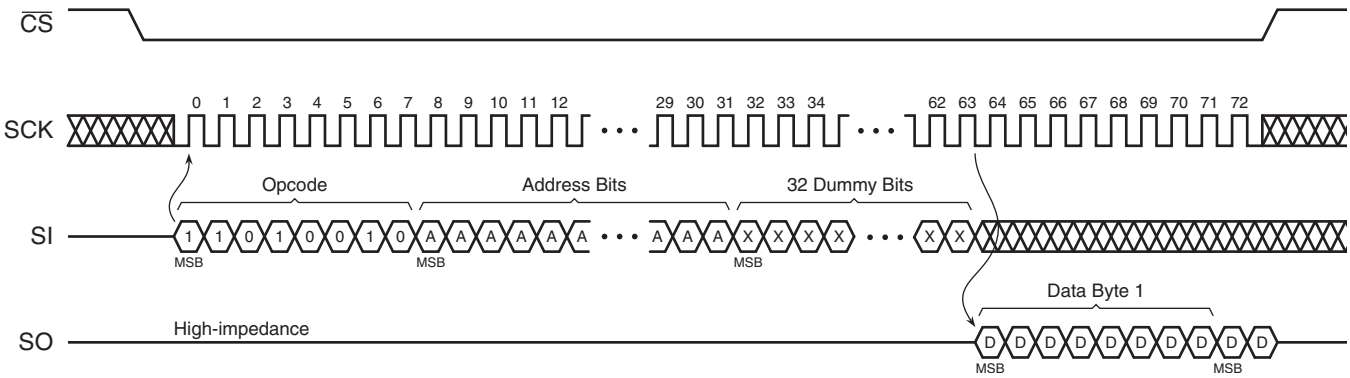


**Figure 25-5. Buffer Read (Opcode D4h or D6h)**

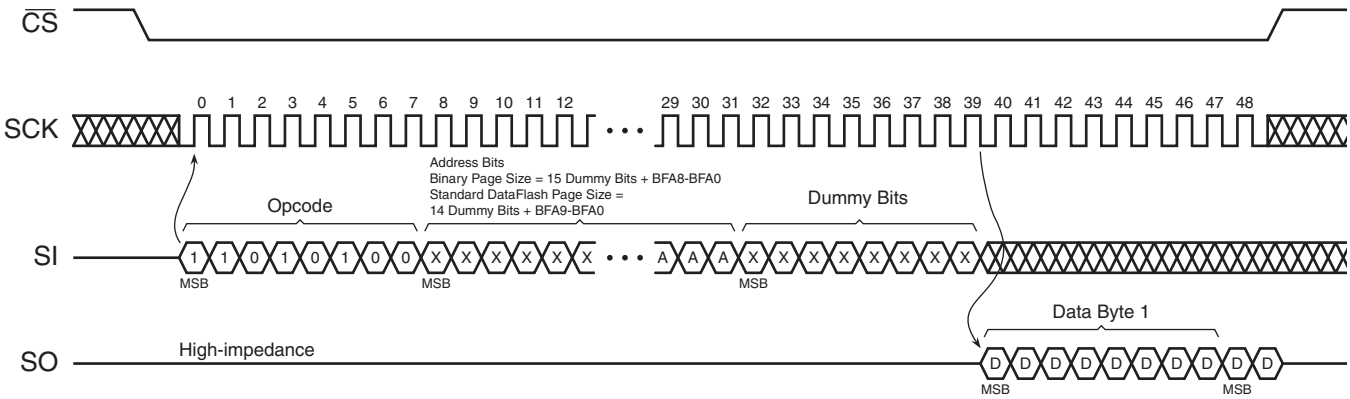


**Figure 25-6. Buffer Read – Low Frequency (Opcode D1h or D3h)**

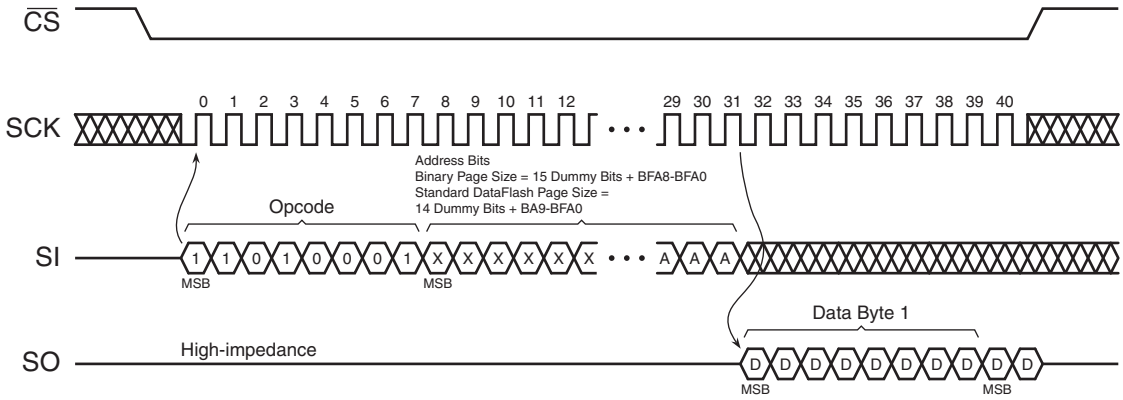

**Figure 25-7. Read Sector Protection Register (Opcode 32h)**

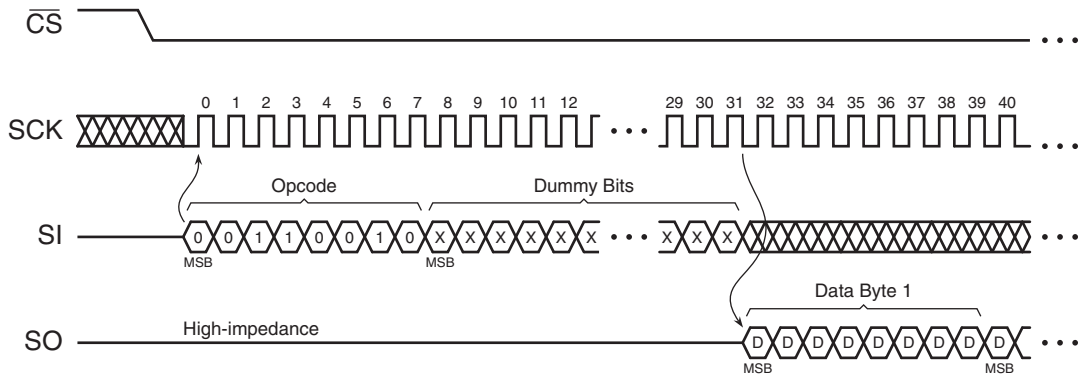


**Figure 25-8. Read Security Register (Opcode 77h)**

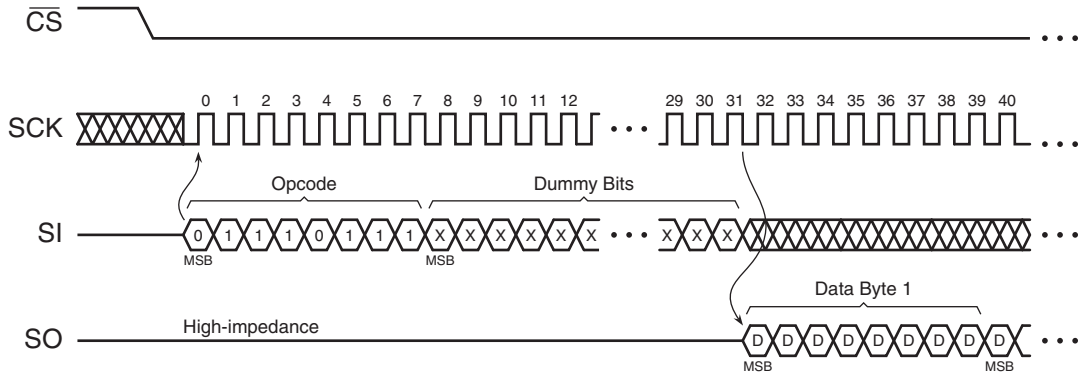


**Figure 25-9. Status Register Read (Opcode D7h)**

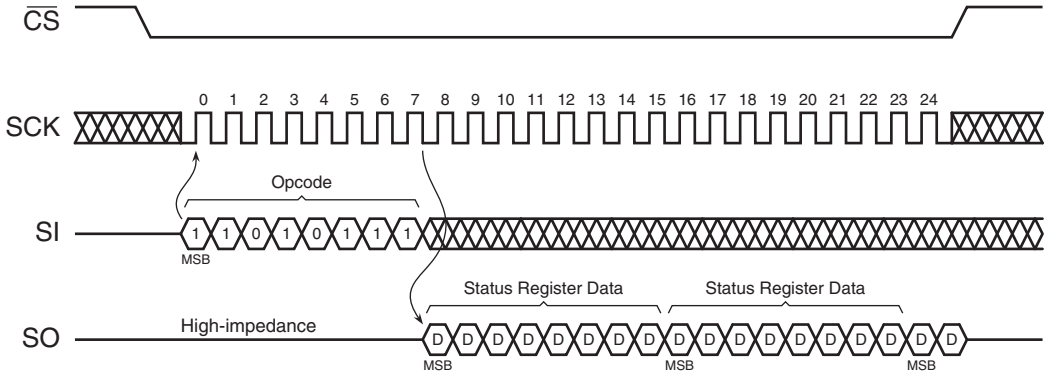

**Figure 25-10. Manufacturer and Device Read (Opcode 9Fh)**

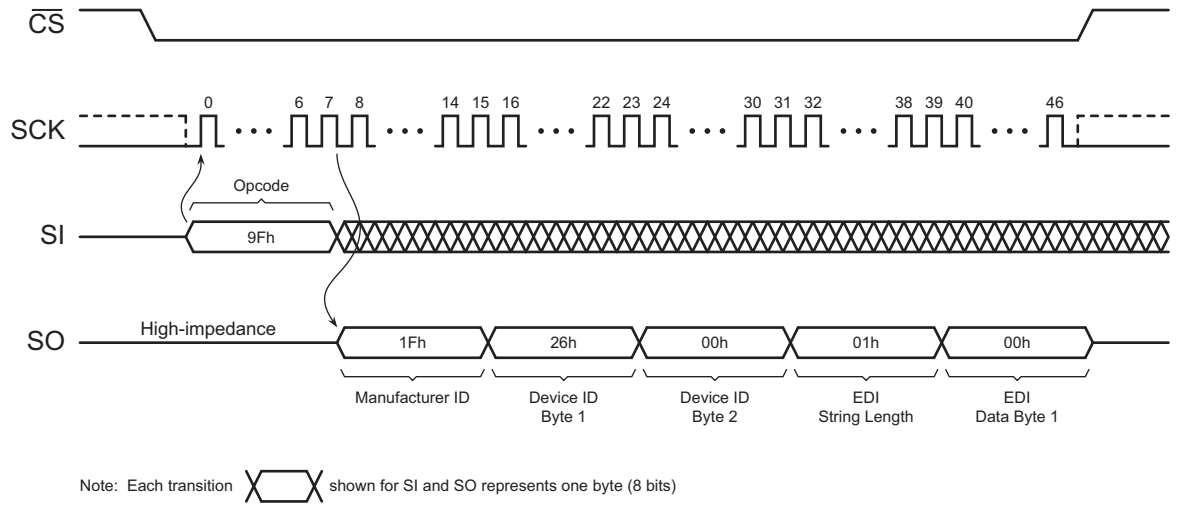


**Figure 25-11.Reset Timing**

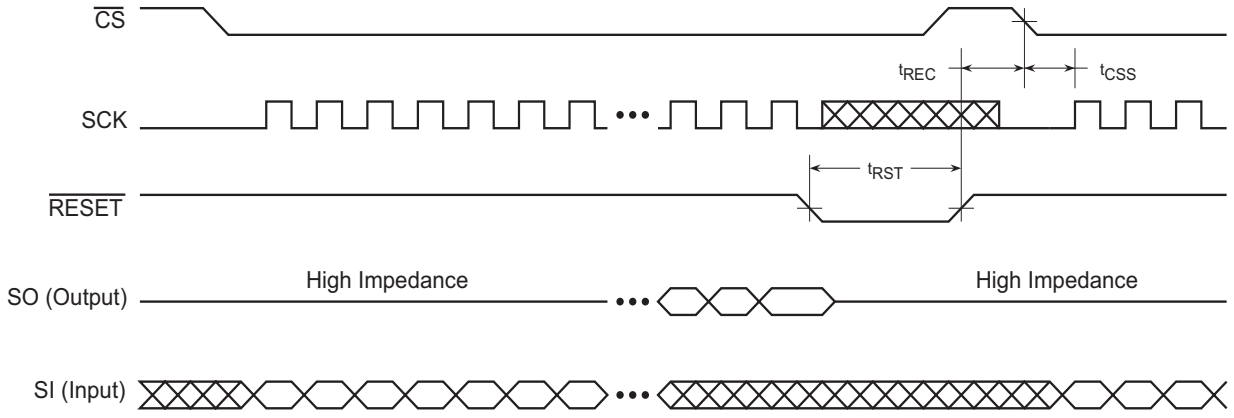


Note: 1. The $\overline{CS}$ signal should be in the high state before the $\overline{RESET}$ signal is deasserted.

# 26. Auto Page Rewrite Flowchart

**Figure 26-1. Algorithm for Programming or Re-programming of the Entire Array Sequentially**

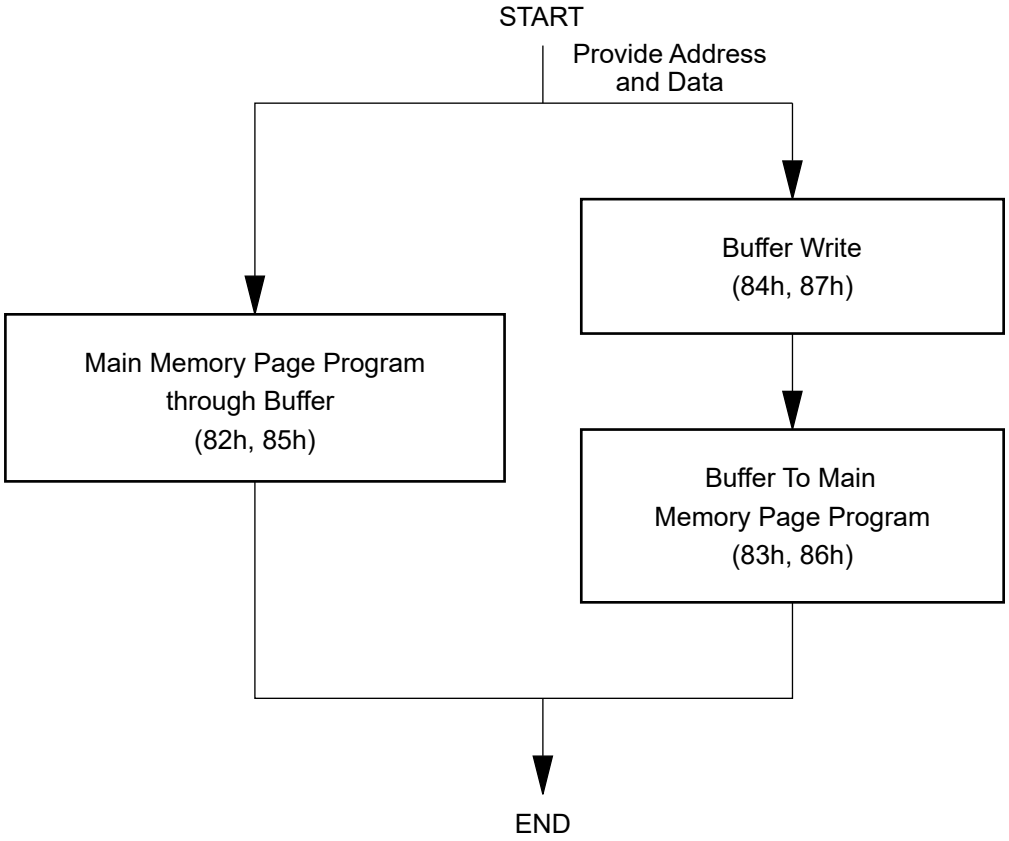


Notes:
1. This type of algorithm is used for applications in which the entire array is programmed sequentially, filling the array page-by-page
2. A page can be written using either a Main Memory Page Program operation or a buffer write operation followed by a buffer to Main Memory Page Program operation
3. The algorithm above shows the programming of a single page. The algorithm will be repeated sequentially for each page within the entire array

**Figure 26-2. Algorithm for Programming or Re-programming of the Entire Array Randomly**

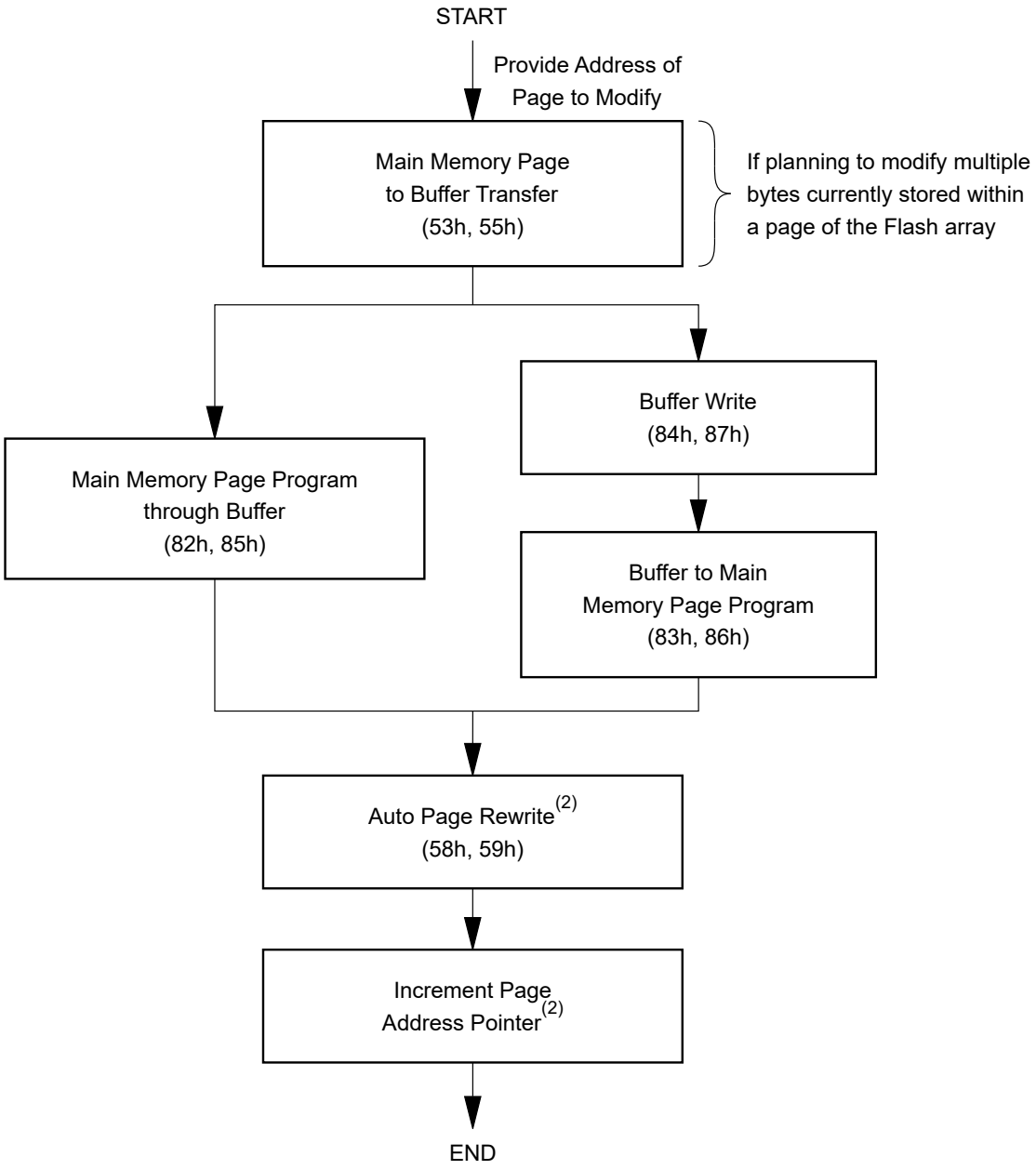


Notes:
1. To preserve data integrity, each page of an DataFlash-L sector must be updated/rewritten at least once within every 50,000 cumulative page erase and program operations
2. A page address pointer must be maintained to indicate which page is to be rewritten. The auto page rewrite command must use the address specified by the page address pointer
3. Other algorithms can be used to rewrite portions of the Flash array. Low-power applications may choose to wait until 50,000 cumulative page erase and program operations have accumulated before rewriting all pages of the sector.

# 27. Ordering Information

## 27.1 Ordering Detail

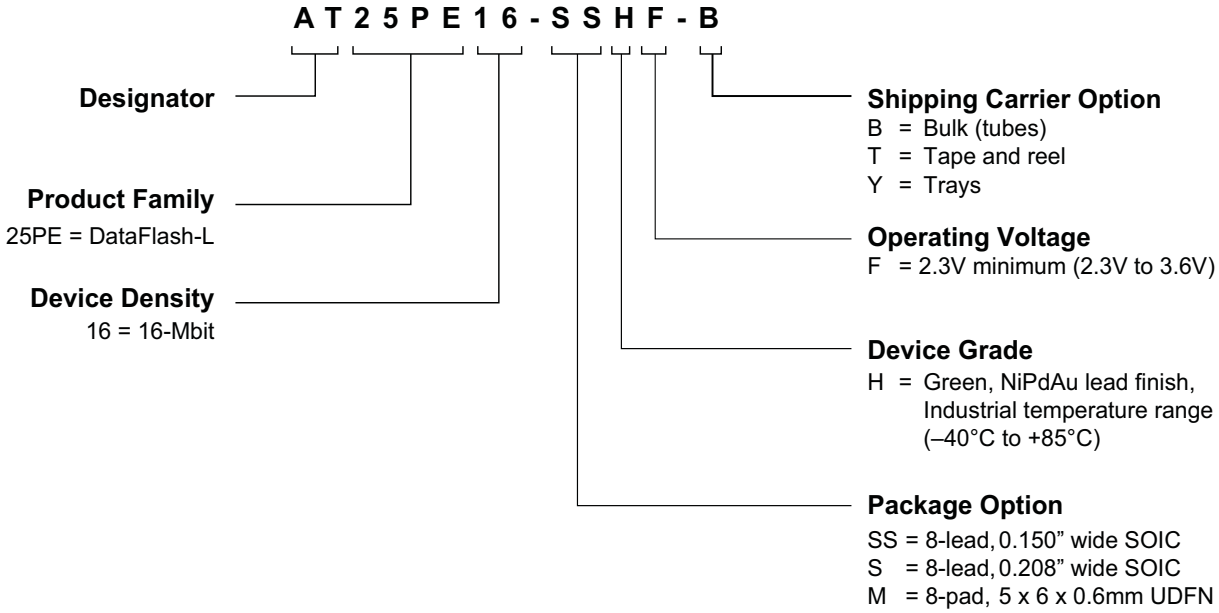


## 27.2 Ordering Codes (Default 512 Byte Page Size)

| Ordering Code[1] | Package | Lead Finish | Operating Voltage | $f_{SCK}$ | Device Grade |
|---|---|---|---|---|---|
| AT25PE16-SSHF-B | 8S1 | NiPdAu | 2.3V to 3.6V | 85MHz | Industrial (-40°C to 85°C) |
| AT25PE16-SSHF-T | | | | | |
| AT25PE16-SHF-B | 8S2 | | | | |
| AT25PE16-SHF-T | | | | | |
| AT25PE16-MHF-Y | 8MA1 | | | | |
| AT25PE16-MHF-T | | | | | |

Notes: 1. The shipping carrier suffix is not marked on the device.

| Package Type | |
|---|---|
| 8S1 | 8-lead 0.150" wide, Plastic Gull Wing Small Outline (JEDEC SOIC) |
| 8S2 | 8-lead 0.208" wide, Plastic Gull Wing Small Outline (EIAJ SOIC) |
| 8MA1 | 8-pad (5 x 6 x 0.6mm body), Thermally Enhanced Plastic Ultra Thin Dual Flat No-lead (UDFN) |

# 28. Packaging Information

## 28.1 8S1 – 8-lead JEDEC SOIC

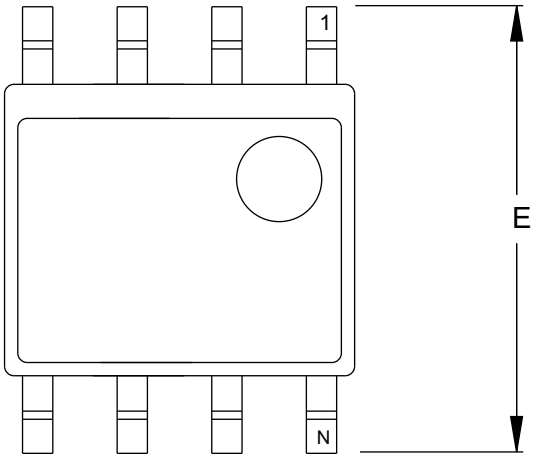


TOP VIEW

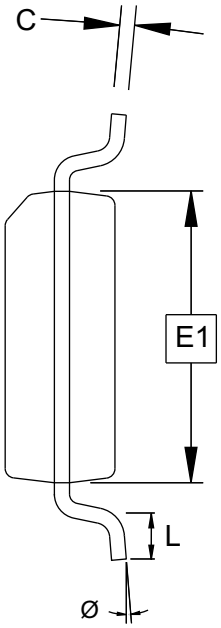


END VIEW

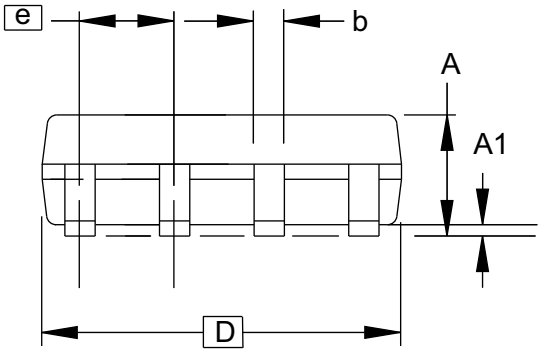


SIDE VIEW

Notes: This drawing is for general information only. Refer to JEDEC Drawing MS-012, Variation AA for proper dimensions, tolerances, datums, etc.

COMMON DIMENSIONS
(Unit of Measure = mm)

| SYMBOL | MIN | NOM | MAX | NOTE |
|---|---|---|---|---|
| A | 1.35 | – | 1.75 | |
| A1 | 0.10 | – | 0.25 | |
| b | 0.31 | – | 0.51 | |
| C | 0.17 | – | 0.25 | |
| D | 4.80 | – | 5.05 | |
| E1 | 3.81 | – | 3.99 | |
| E | 5.79 | – | 6.20 | |
| e | 1.27 BSC | | | |
| L | 0.40 | – | 1.27 | |
| Ø | 0° | – | 8° | |

6/22/11

| adesto TECHNOLOGIES<br>**Package Drawing Contact:**<br>contact@adestotech.com | **TITLE**<br>8S1, 8-lead (0.150” Wide Body), Plastic Gull Wing Small Outline (JEDEC SOIC) | **GPC**<br>SWB | **DRAWING NO.**<br>8S1 | **REV.**<br>G |
|---|---|---|---|---|

## 28.2 8S2 – 8-lead EIAJ SOIC

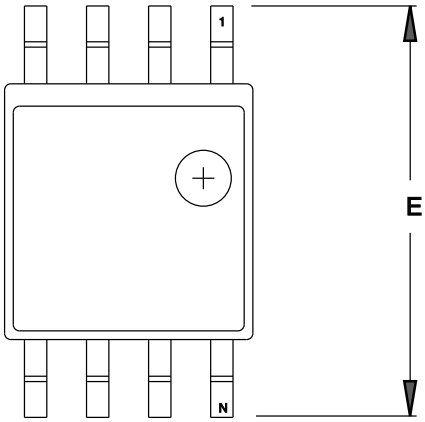


TOP VIEW

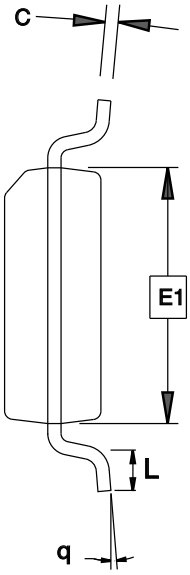


END VIEW

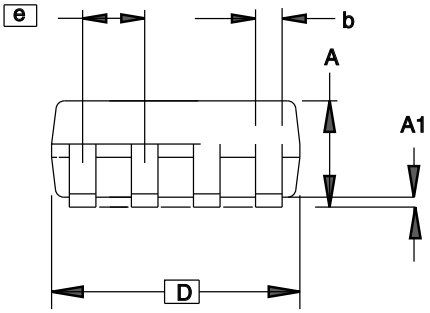


SIDE VIEW

**COMMON DIMENSIONS**
(Unit of Measure = mm)

| SYMBOL | MIN | NOM | MAX | NOTE |
|---|---|---|---|---|
| A | 1.70 | | 2.16 | |
| A1 | 0.05 | | 0.25 | |
| b | 0.35 | | 0.48 | 4 |
| C | 0.15 | | 0.35 | 4 |
| D | 5.13 | | 5.35 | |
| E1 | 5.18 | | 5.40 | 2 |
| E | 7.70 | | 8.26 | |
| L | 0.51 | | 0.85 | |
| q | 0° | | 8° | |
| e | 1.27 BSC | | | 3 |

Notes: 1. This drawing is for general information only; refer to EIAJ Drawing EDR-7320 for additional information.
2. Mismatch of the upper and lower dies and resin burrs aren't included.
3. Determines the true geometric position.
4. Values b,C apply to plated terminal. The standard thickness of the plating layer shall measure between 0.007 to .021 mm.

4/15/08

| adesto TECHNOLOGIES<br>**Package Drawing Contact:**<br>contact@adestotech.com | **TITLE**<br>**8S2,** 8-lead, 0.208” Body, Plastic Small Outline Package (EIAJ) | **GPC**<br>STN | **DRAWING NO.**<br>8S2 | **REV.**<br>F |
|---|---|---|---|---|

## 28.3 8MA1 – 8-pad UDFN

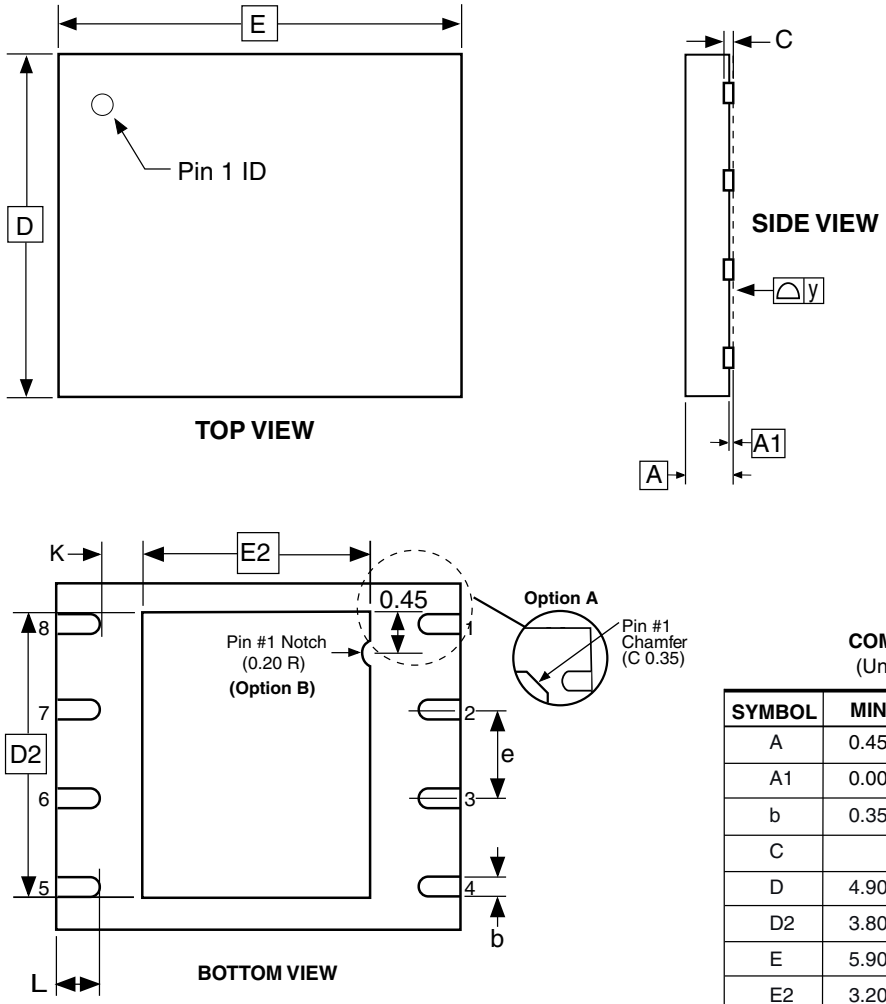


**COMMON DIMENSIONS**
(Unit of Measure = mm)

| SYMBOL | MIN | NOM | MAX | NOTE |
|---|---|---|---|---|
| A | 0.45 | 0.55 | 0.60 | |
| A1 | 0.00 | 0.02 | 0.05 | |
| b | 0.35 | 0.40 | 0.48 | |
| C | | 0.152 REF | | |
| D | 4.90 | 5.00 | 5.10 | |
| D2 | 3.80 | 4.00 | 4.20 | |
| E | 5.90 | 6.00 | 6.10 | |
| E2 | 3.20 | 3.40 | 3.60 | |
| e | | 1.27 | | |
| L | 0.50 | 0.60 | 0.75 | |
| y | 0.00 | – | 0.08 | |
| K | 0.20 | – | – | |

Notes: 1. This package conforms to JEDEC reference MO-229, Saw Singulation.
2. The terminal #1 ID is a Laser-marked Feature.

4/15/08

| | TITLE | GPC | DRAWING NO. | REV. |
|---|---|---|---|---|
| adesto TECHNOLOGIES **Package Drawing Contact:** contact@adestotech.com | **8MA1,** 8-pad (5 x 6 x 0.6 mm Body), Thermally Enhanced Plastic Ultra Thin Dual Flat No Lead Package (UDFN) | YFG | 8MA1 | D |

# 29. Revision History

| Doc. Rev. | Date | Comments |
|---|---|---|
| DS-25PE16-143A | 07/2017 | Initial document release. |

**Corporate Office**

California | USA
Adesto Headquarters
3600 Peterson Way
Santa Clara, CA 95054
Phone: (+1) 408.400.0578
Email: contact@adestotech.com

© 2017 Adesto Technologies. All rights reserved. / Rev.: DS-25PE16-143A–7/2017

Adesto®, the Adesto logo, CBRAM®, and DataFlash® are registered trademarks or trademarks of Adesto Technologies. All other marks are the property of their respective owners. Adesto products in this datasheet are covered by certain Adesto patents registered in the United States and potentially other countries. Please refer to http://www.adestotech.com/patents for details.

Disclaimer: Adesto Technologies Corporation makes no warranty for the use of its products, other than those expressly contained in the Company's standard warranty which is detailed in Adesto's Terms and Conditions located on the Company's web site. The Company assumes no responsibility for any errors which may appear in this document, reserves the right to change devices or specifications detailed herein at any time without notice, and does not make any commitment to update the information contained herein. No licenses to patents or other intellectual property of Adesto are granted by the Company in connection with the sale of Adesto products, expressly or by implication. Adesto's products are not authorized for use as critical components in life support devices or systems.