LTC485

Low Power RS485 Interface Transceiver

FEATURES

- Low Power: I_{CC} = 300µA Typ
- Designed for RS485 Interface Applications
- Single 5V supply
- –7V to 12V Bus Common Mode Range Permits ±7V Ground Difference Between Devices on the Bus
- Thermal Shutdown Protection
- Power-Up/Down Glitch-Free Driver Outputs Permit Live Insertion or Removal of Transceiver
- Driver Maintains High Impedance in Three-State or with the Power Off
- Combined Impedance of a Driver Output and Receiver Allows Up to 32 Transceivers on the Bus
- 70mV Typical Input Hysteresis
- 30ns Typical Driver Propagation Delays with 5ns Skew for Up to 2.5MB Operation
- Pin Compatible with ±60V Protected LT1785 and 52Mbps LTC1685

APPLICATIONS

- Low Power RS485/RS422 Transceiver
- Level Translator

DESCRIPTION

The LTC®485 is a low power differential bus/line transceiver designed for multipoint data transmission standard RS485 applications with extended common mode range (12V to –7V). It also meets the requirements of RS422.

The CMOS design offers significant power savings over its bipolar counterpart without sacrificing ruggedness against overload of ESD damage.

The driver and receiver feature three-state outputs, with the driver outputs maintaining high impedance over the entire common mode range. Excessive power dissipation caused by bus contention or faults is prevented by a thermal shutdown circuit which forces the driver outputs into a high impedance state.

The receiver has a fail-safe feature which guarantees a high output state when the inputs are left open.

The LTC485 is fully specified over the commercial and extended industrial temperature range.

, LT, LTC, LTM, Linear Technology and the Linear logo are registered trademarks of Linear Technology Corporation. All other trademarks are the property of their respective owners.

TYPICAL APPLICATION

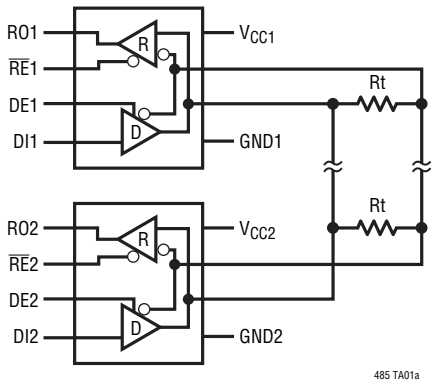

Driver Outputs

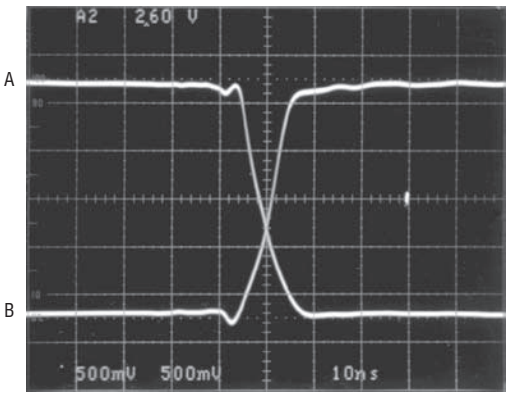

sales@prom-elec.com / ООО ПРОМЭЛЕКТРОНИКА

ABSOLUTE MAXIMUM RATINGS

(Note 1)

Supply Voltage 12V
Control Input Voltages ..... –0.5V to V_{CC} + 0.5V
Driver Input Voltage ..... –0.5V to V_{CC} + 0.5V
Driver Output Voltage ..... ±14V
Receiver Input Voltage ..... ±14V
Receiver Output Voltages ..... –0.5V to V_{CC} + 0.5V
Operating Temperature Range
LTC485I ..... –40°C ≤ T_A ≤ 85°C
LTC485C ..... 0°C ≤ T_A ≤ 70°C
LTC485M ..... –55°C ≤ T_A ≤ 125°C
Lead Temperature (Soldering, 10 sec) ..... 300°C

PIN CONFIGURATION

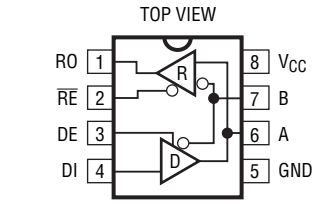

N8 PACKAGE
8-LEAD PLASTIC DIP

S8 PACKAGE
8-LEAD PLASTIC SOIC

J8 PACKAGE
8-LEAD CERAMIC DIP

T_{JMAX} = 125°C, θ_{JA} = 100°C/W (N)
T_{JMAX} = 150°C, θ_{JA} = 150°C/W (S)
T_{JMAX} = 155°C, θ_{JA} = 100°C/W (J)

ORDER INFORMATION

LEAD FREE FINISH	TAPE AND REEL	PART MARKING*	PACKAGE DESCRIPTION	TEMPERATURE RANGE
LTC485CN8#PBF	LTC485CN8#TRPBF	LTC485CN8	8-Lead Plastic DIP	0°C to 70°C
LTC485CS8#PBF	LTC485CS8#TRPBF	485	8-Lead Plastic SOIC	0°C to 70°C
LTC485IN8#PBF	LTC485IN8#TRPBF	LTC485IN8	8-Lead Plastic DIP	–40°C to 85°C
LTC485IS8#PBF	LTC485IS8#TRPBF	485I	8-Lead Plastic SOIC	–40°C to 85°C
LEAD BASED FINISH	**TAPE AND REEL**	**PART MARKING***	**PACKAGE DESCRIPTION**	**TEMPERATURE RANGE**
LTC485CN8	LTC485CN8#TR	LTC485CN8	8-Lead Plastic DIP	0°C to 70°C
LTC485CS8	LTC485CS8#TR	485	8-Lead Plastic SOIC	0°C to 70°C
LTC485IN8	LTC485IN8#TR	LTC485IN8	8-Lead Plastic DIP	–40°C to 85°C
LTC485IS8	LTC485IS8#TR	485I	8-Lead Plastic SOIC	–40°C to 85°C
LTC485MJ8	LTC485MJ8#TR	LTC485MJ8	8-Lead Ceramic DIP	–55°C to 125°C

Consult LTC Marketing for parts specified with wider operating temperature ranges. *The temperature grade is identified by a label on the shipping container.

For more information on lead free part marking, go to: http://www.linear.com/leadfree/
For more information on tape and reel specifications, go to: http://www.linear.com/tapeandreel/

ELECTRICAL CHARACTERISTICS

The ● denotes the specifications which apply over the full operating temperature range, otherwise specifications are at T_A = 25°C. V_{CC} = 5V ±5%, unless otherwise noted. (Notes 2 and 3)

SYMBOL	PARAMETER	CONDITIONS		MIN	TYP	MAX	UNITS
V_{OD1}	Differential Driver Output Voltage (Unloaded)	I_O = 0	●		5		V
V_{OD2}	Differential Driver Output Voltage (with Load)	R = 50Ω (RS422) R = 27Ω (RS485), Figure 1	● ●	2 1.5		 5	V V
ΔV_{OD}	Change in Magnitude of Driver Differential Output Voltage for Complementary States	R = 27Ω or R = 50Ω, Figure 1	●			0.2	V
V_{OC}	Driver Common Mode Output Voltage	R = 27Ω or R = 50Ω, Figure 1	●			3	V
$\Delta\lvert V_{OC}\rvert$	Change in Magnitude of Driver Common Mode Output Voltage for Complementary States	R = 27Ω or R = 50Ω, Figure 1	●			0.2	V

ELECTRICAL CHARACTERISTICS

The ● denotes the specifications which apply over the full operating temperature range, otherwise specifications are at T_A = 25°C. V_{CC} = 5V ±5%, unless otherwise noted. (Notes 2 and 3)

SYMBOL	PARAMETER	CONDITIONS		MIN	TYP	MAX	UNITS
V_{IH}	Input High Voltage	DE, DI, $\overline{RE}$	●	2			V
V_{IL}	Input Low Voltage	DE, DI, $\overline{RE}$	●			0.8	V
I_{IN1}	Input Current	DE, DI, $\overline{RE}$	●			±2	µA
I_{IN2}	Input Current (A, B)	DE = 0, V_{CC} = 0V or 5.25V V_{IN} = 12V V_{IN} = –7V	● ●			±1 –0.8	mA mA
V_{TH}	Differential Input Threshold Voltage for Receiver	–7V ≤ V_{CM} ≤ 12V	●	–0.2		0.2	V
ΔV_{TH}	Receiver Input Hysteresis	V_{CM} = 0V	●		70		mV
V_{OH}	Receiver Output High Voltage	I_O = –4mA, V_{ID} = 200mV	●	3.5			V
V_{OL}	Receiver Output Low Voltage	I_O = 4mA, V_{ID} = –200mV	●			0.4	V
I_{OZR}	Three-State (High Impedance) Output Current at Receiver	V_{CC} = Max, 0.4V ≤ V_O ≤ 2.4V	●			±1	µA
R_{IN}	Receiver Input Resistance	–7V ≤ V_{CM} ≤ 12V	●	12			kΩ

SWITCHING CHARACTERISTICS

The ● denotes the specifications which apply over the full operating temperature range, otherwise specifications are at T_A = 25°C. V_{CC} = 5V ±5%, unless otherwise noted. (Notes 2 and 3)

SYMBOL	PARAMETER	CONDITIONS		MIN	TYP	MAX	UNITS
I_{CC}	Supply Current	No Load, Pins 2, 3, 4 = 0V or 5V Outputs Enabled Outputs Disabled	● ●		500 300	900 500	µA µA
I_{OSD1}	Driver Short-Circuit Current, V_{OUT} = HIGH	V_O = – 7V	●	35	100	250	mA
I_{OSD2}	Driver Short-Circuit Current, V_{OUT} = LOW	V_O = 10V	●	35	100	250	mA
I_{OSR}	Receiver Short-Circuit Current	0V ≤ V_O ≤ V_{CC}	●	7		85	mA
t_{PLH}	Driver Input to Output	R_{DIFF} = 54Ω, C_{L1} = C_{L2} = 100pF; (Figures 3 and 5)	●	10	30	50	ns
t_{PHL}	Driver Input to Output		●	10	30	50	ns
t_{SKEW}	Driver Output to Output		●		5	10	ns
t_r, t_f	Driver Rise or Fall Time		●	3	15	25	ns
t_{ZH}	Driver Enable to Output High	C_L = 100pF (Figures 4 and 6) S2 Closed	●		40	70	ns
t_{ZL}	Driver Enable to Output Low	C_L = 100pF (Figures 4 and 6) S1 Closed	●		40	70	ns
t_{LZ}	Driver Disable Time from Low	C_L = 15pF (Figures 4 and 6) S1 Closed	●		40	70	ns
t_{HZ}	Driver Disable Time from High	C_L = 15pF (Figures 4 and 6) S2 Closed	●		40	70	ns
t_{PLH}	Receiver Input to Output	R_{DIFF} = 54Ω, CL1 = CL2 = 100pF; (Figures 3 and 7)	●	30	90	200	ns
t_{PHL}			●	30	90	200	ns
t_{SKD}	$\lvert t_{PLH} – t_{PHL} \rvert$ Differential Receiver Skew		●		13		ns
t_{ZL}	Receiver Enable to Output Low	C_{RL} = 15pF (Figures 2 and 8) S1 Closed	●		20	50	ns
t_{ZH}	Receiver Enable to Output High	C_{RL} = 15pF (Figures 2 and 8) S2 Closed	●		20	50	ns
t_{LZ}	Receiver Disable from Low	C_{RL} = 15pF (Figures 2 and 8) S1 Closed	●		20	50	ns
t_{HZ}	Receiver Disable from High	C_{RL} = 15pF (Figures 2 and 8) S2 Closed	●		20	50	ns

Note 1: Stresses beyond those listed under Absolute Maximum Ratings may cause permanent damage to the device. Exposure to any Absolute Maximum Rating condition for extended periods may affect device reliability and lifetime.

Note 2: All currents into device pins are positive; all currents out ot device pins are negative. All voltages are referenced to device ground unless otherwise specified.

Note 3: All typicals are given for V_{CC} = 5V and T_A = 25°C.

Note 4: The LTC485 is guaranteed by design to be functional over a supply voltage range of 5V ±10%. Data sheet parameters are guaranteed over the tested supply voltage range of 5V ±5%.

TYPICAL PERFORMANCE CHARACTERISTICS

Receiver Output Low Voltage vs Output Current

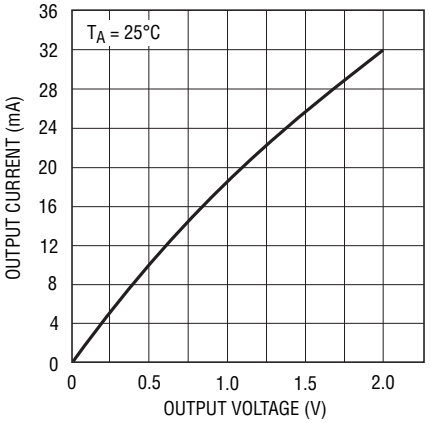

485 G01

Receiver Output High Voltage vs Output Current

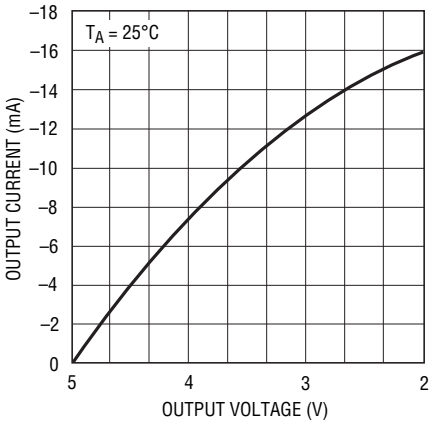

485 G02

Receiver Output High Voltage vs Temperature

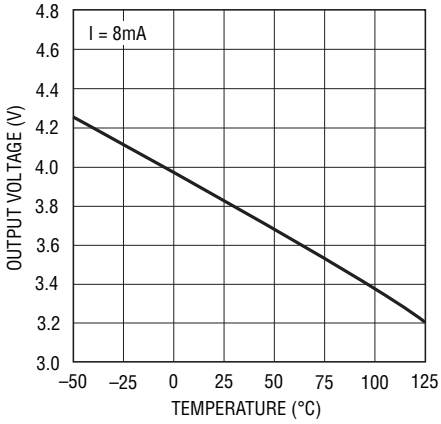

485 G03

Receiver Output Low Voltage vs Temperature

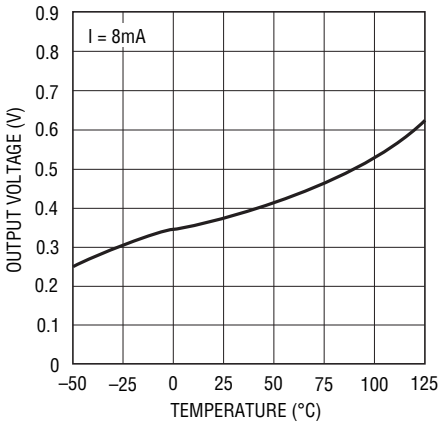

485 G04

Driver Differential Output Voltage vs Output Current

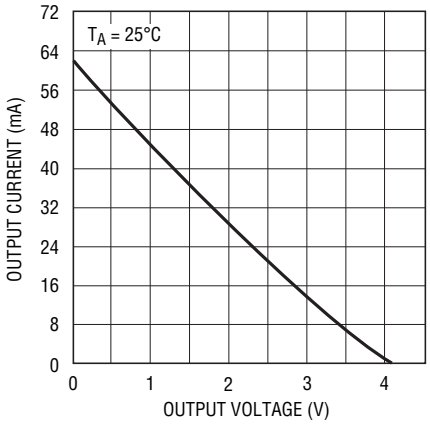

485 G05

Driver Differential Output Voltage vs Temperature

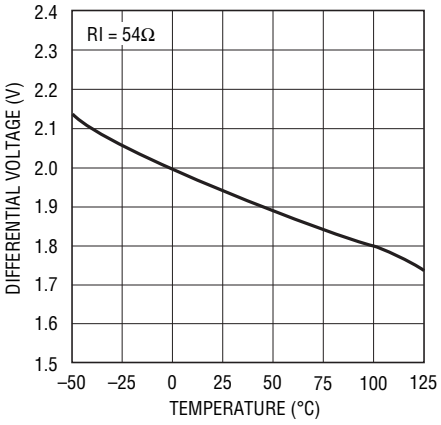

485 G06

Driver Output Low Voltage vs Output Current

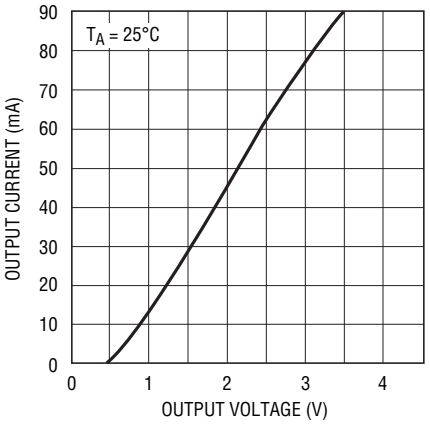

485 G07

Driver Output High Voltage vs Output Current

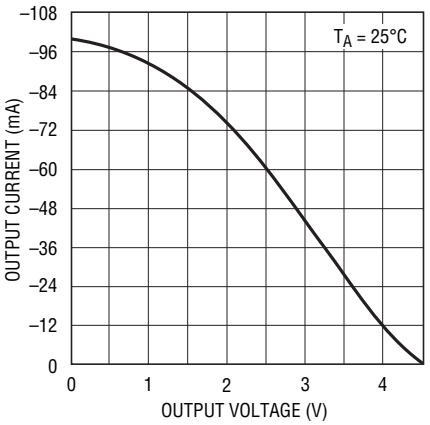

485 G08

TTL Input Threshold vs Temperature

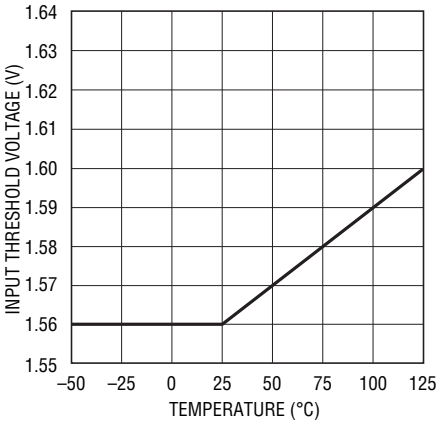

485 G09

TYPICAL PERFORMANCE CHARACTERISTICS

Receiver $|t_{PLH} - t_{PHL}|$ vs Temperature

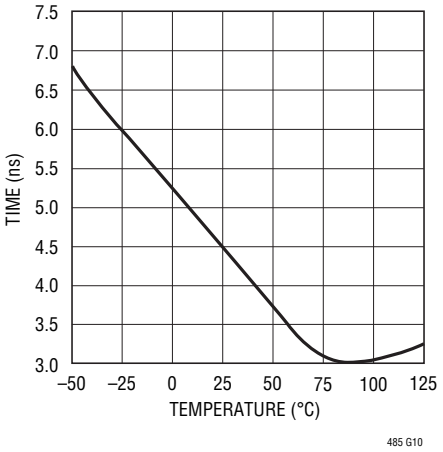

Driver Skew vs Temperature

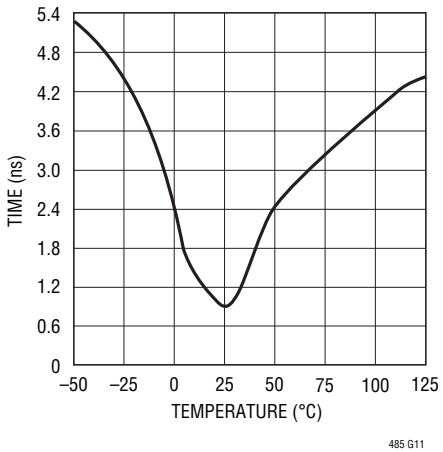

Supply Current vs Temperature

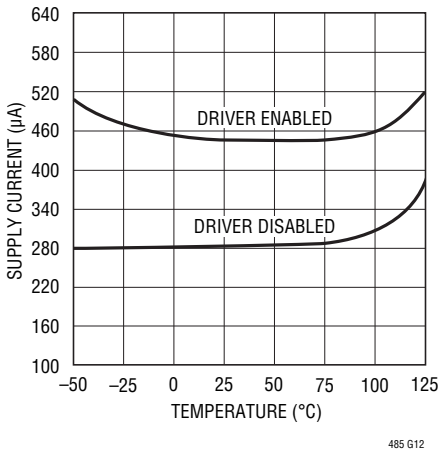

PIN FUNCTIONS

RO (Pin 1): Receiver Output. If the receiver output is enabled ($\overline{RE}$ low), then if A > B by 200mV, RO will be high. If A < B by 200mV, then RO will be low.

$\overline{RE}$ (Pin 2): Receiver Output Enable. A low enables the receiver output, RO. A high input forces the receiver output into a high impedance state.

DE (Pin 3): Driver Outputs Enable. A high on DE enables the driver output. A and B, and the chip will function as a line driver. A low input will force the driver outputs into a high impedance state and the chip will function as a line receiver.

DI (Pin 4): Driver Input. If the driver outputs are enabled (DE high), then a low on DI forces the outputs A low and B high. A high on DI with the driver outputs enabled will force A high and B low.

GND (Pin 5): Ground Connection.

A (Pin 6): Driver Output/Receiver Input.

B (Pin 7): Driver Output/Receiver Input.

V_{CC} (Pin 8): Positive Supply; $4.75 < V_{CC} < 5.25$.

TEST CIRCUITS

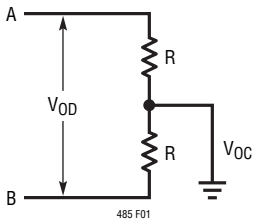

Figure 1. Driver DC Test Load

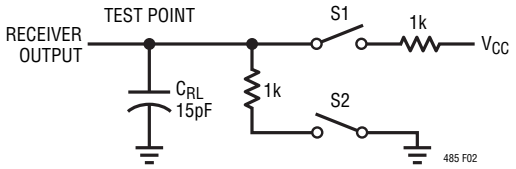

Figure 2. Receiver Timing Test Load

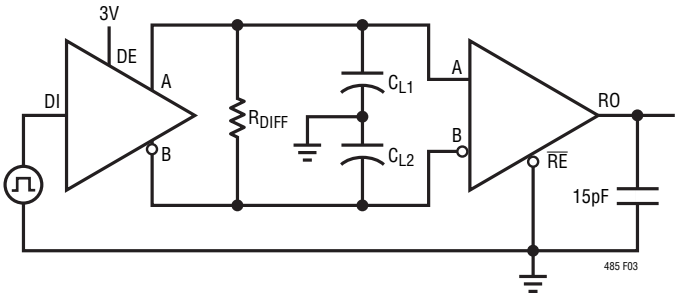

Figure 3. Driver/Receiver Timing Test Circuit

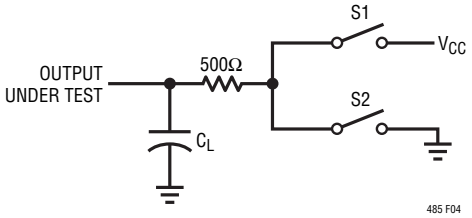

Figure 4. Driver Timing Test Load #2

SWITCHING TIME WAVEFORMS

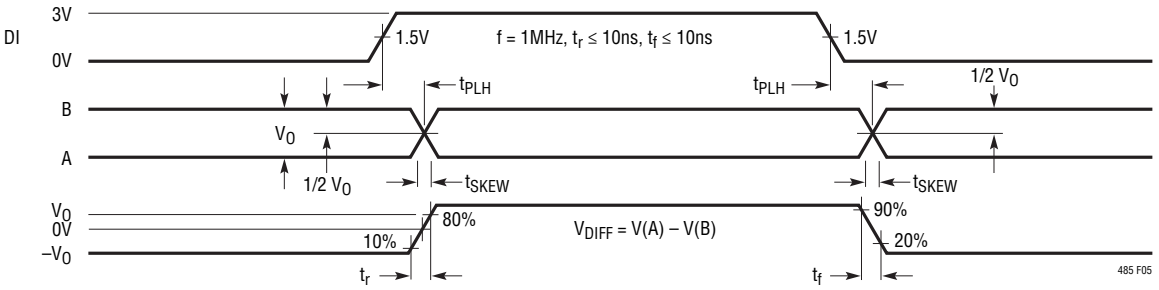

Figure 5. Driver Propagation Delays

SWITCHING TIME WAVEFORMS

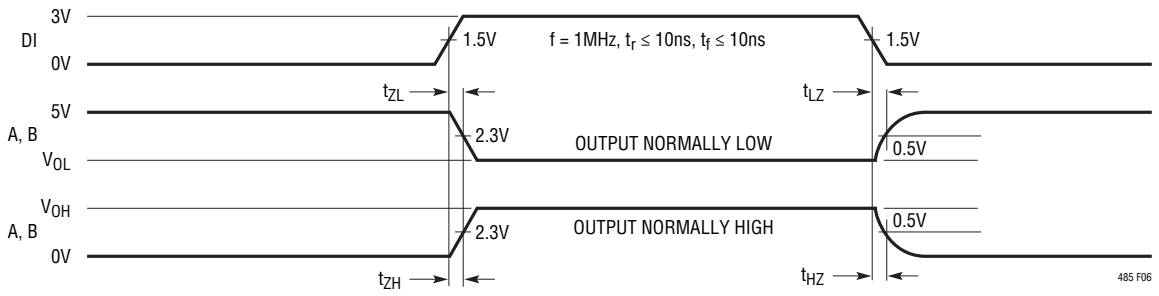

Figure 6. Driver Enable and Disable Times

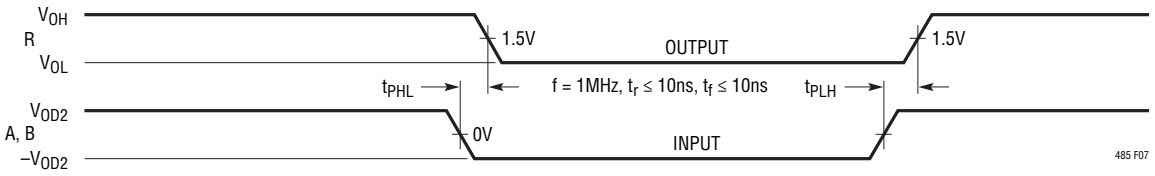

Figure 7. Receiver Propagation Delays

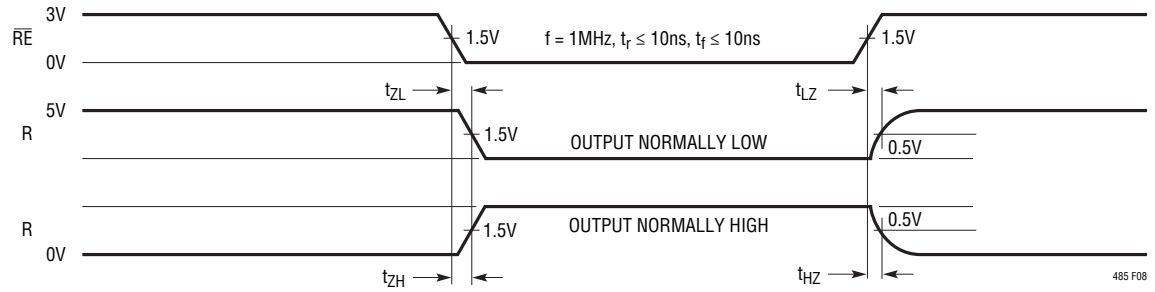

Figure 8. Receiver Enable and Disable Times

FUNCTION TABLES

LTC485 Transmitting

INPUTS			LINE CONDITION	OUTPUTS	
$\overline{RE}$	DE	DI		B	A
X	1	1	No Fault	0	1
X	1	0	No Fault	1	0
X	0	X	X	Z	Z
X	1	X	Fault	Z	Z

LTC485 Receiving

INPUTS			OUTPUTS
$\overline{RE}$	DE	A – B	R
0	0	≥ 0.2V	1
0	0	≤ –0.2V	0
0	0	Inputs Open	1
1	0	X	Z

APPLICATIONS INFORMATION

Basic Theory of Operation

Previous RS485 transceivers have been designed using bipolar technology because the common mode range of the device must extend beyond the supplies and the device must be immune to ESD damage and latchup. Unfortunately, the bipolar devices draw a large amount of supply current, which is unacceptable for the numerous applications that require low power consumption. The LTC485 is the first CMOS RS485/RS422 transceiver which features ultralow power consumption without sacrificing ESD and latchup immunity.

The LTC485 uses a proprietary driver output stage, which allows a common-mode range that extends beyond the power supplies while virtually eliminating latchup and providing excellent ESD protection. Figure 9 shows the LTC485 output stage while Figure 10 shows a conventional CMOS output stage.

When the conventional CMOS output stage of Figure 10 enters a high impedance state, both the P-channel (P1) and the N-channel (N1) are turned off. If the output is then driven above V_{CC} or below ground, the P + /N-well diode (D1) or the N + /P-substrate diode (D2) respectively will turn on and clamp the output to the supply. Thus, the output stage is no longer in a high impedance state and is not able to meet the RS485 common mode range requirement. In addition, the large amount of current flowing through either diode will induce the well known CMOS latchup condition, which could destroy the device.

The LTC485 output stage of Figure 9 eliminates these problems by adding two Schottky diodes, SD3 and SD4. The Schottky diodes are fabricated by a proprietary modification to the standard N-well CMOS process. When the output stage is operating normally, the Schottky diodes are forward biased and have a small voltage drop across them. When the output is in the high impedance state and is driven above V_{CC} or below ground, the parasitic diodes D1 or D2 still turn on, but SD3 or SD4 will reverse bias and prevent current from flowing into the N-well or the substrate. Thus, the high impedance state is maintained even with the output voltage beyond the supplies. With no minority carrier current flowing into the N-well or substrate, latchup is virtually eliminated under power-up or power-down conditions.

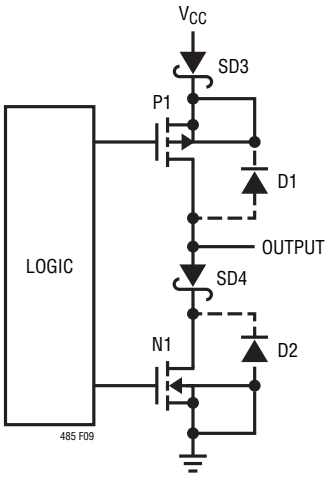

Figure 9. LTC485 Output Stage

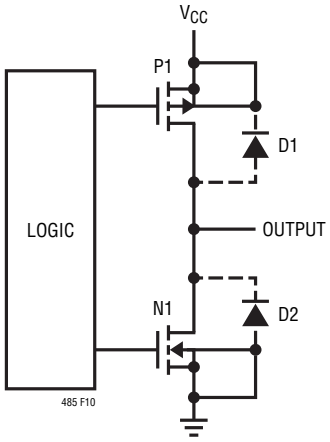

Figure 10. Conventional CMOS Output Stage

APPLICATIONS INFORMATION

The LTC485 output stage will maintain a high impedance state until the breakdown of the N-channel or P-channel is reached when going positive or negative respectively. The output will be clamped to either V_{CC} or ground by a Zener voltage plus a Schottky diode drop, but this voltage is way beyond the RS485 operating range. This clamp protects the MOS gates from ESD voltages well over 2000V. Because the ESD injected current in the N-well or substrate consists of majority carriers, latchup is prevented by careful layout techniques.

Propagation Delay

Many digital encoding schemes are dependent upon the difference in the propagation delay times of the driver and the receiver. Using the test circuit of Figure 13, Figures 11 and 12 show the typical LTC485 receiver propagation delay.

The receiver delay times are:

$|t_{PLH} - t_{PHL}|$ = 9ns Typ, V_{CC} = 5V

The driver skew times are:

Skew = 5ns Typ, V_{CC} = 5V
10ns Max, V_{CC} = 5V, T_A = –40°C to 85°C

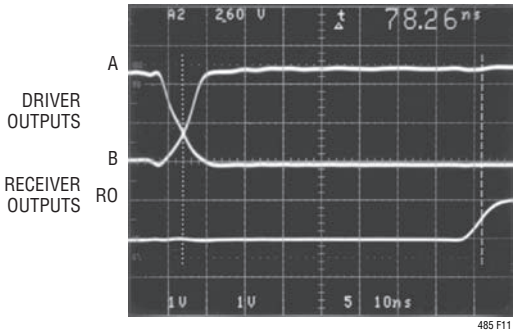

Figure 11. Receiver t_{PHL}

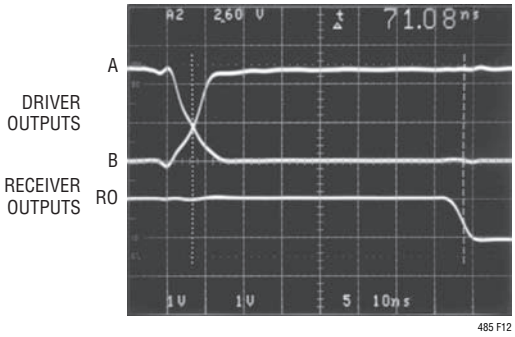

Figure 12. Receiver t_{PLH}

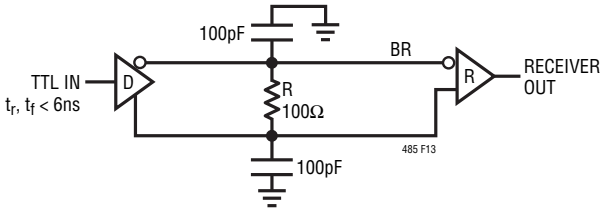

Figure 13. Receiver Propagation Delay Test Circuit

APPLICATIONS INFORMATION

LTC485 Line Length vs Data Rate

The maximum line length allowable for the RS422/RS485 standard is 4000 feet.

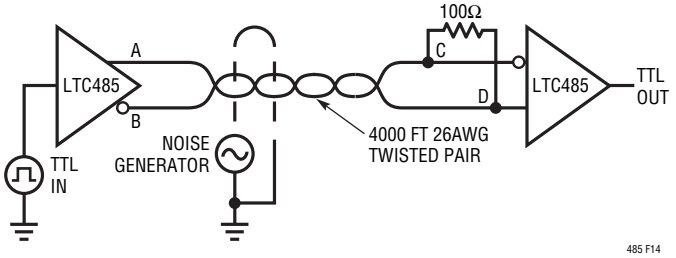

Figure 14. Line Length Test Circuit

Using the test circuit in Figure 14, Figures 15 and 16 show that with ~20V_{P-P} common mode noise injected on the line, The LTC485 is able to reconstruct the data stream at the end of 4000 feet of twisted pair wire.

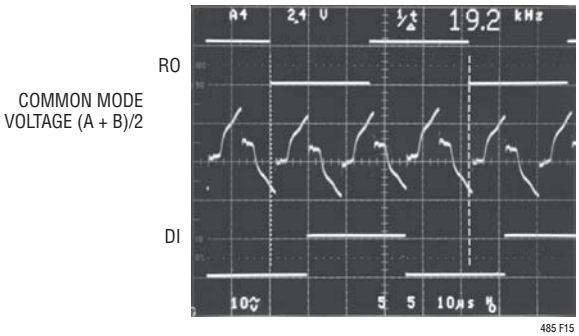

Figure 15. System Common Mode Voltage at 19.2kHz

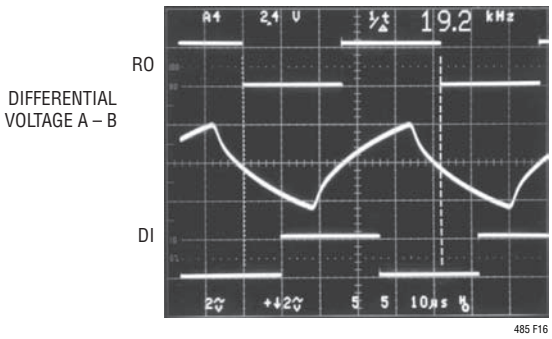

Figure 16. System Differential Voltage at 19.2kHz

Figures 17 and 18 show that the LTC485 is able to comfortably drive 4000 feet of wire at 110kHz.

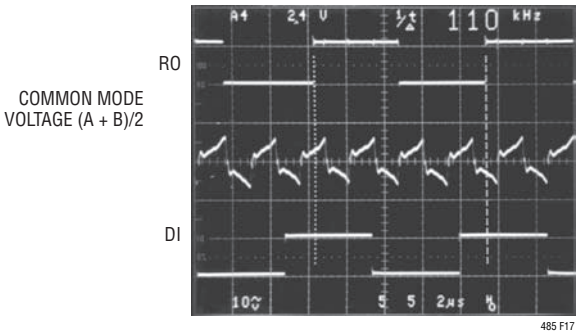

Figure 17. System Common Mode Voltage at 110kHz

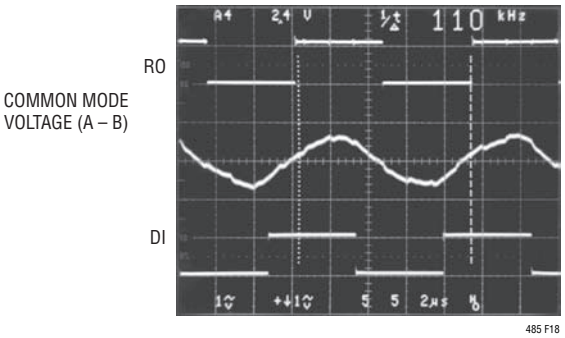

Figure 18. System Differential Voltage at 110kHz

When specifying line length vs maximum data rate the curve in Figure 19 should be used.

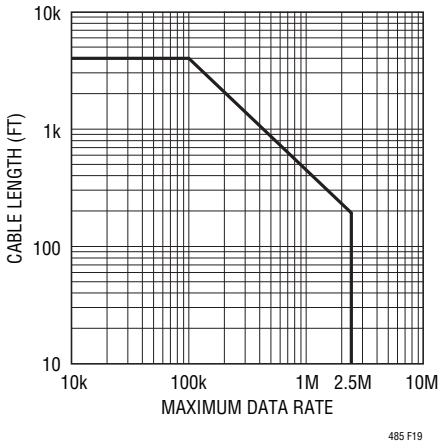

Figure 19. Cable Length vs Maximum Data Rate

TYPICAL APPLICATION

Typical RS485 Network

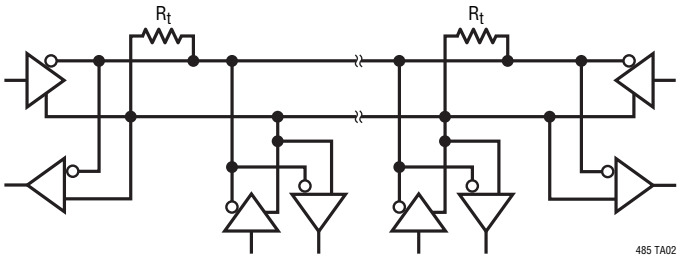

PACKAGE DESCRIPTION

J8 Package
8-Lead CERDIP (Narrow .300 Inch, Hermetic)
(Reference LTC DWG # 05-08-1110)

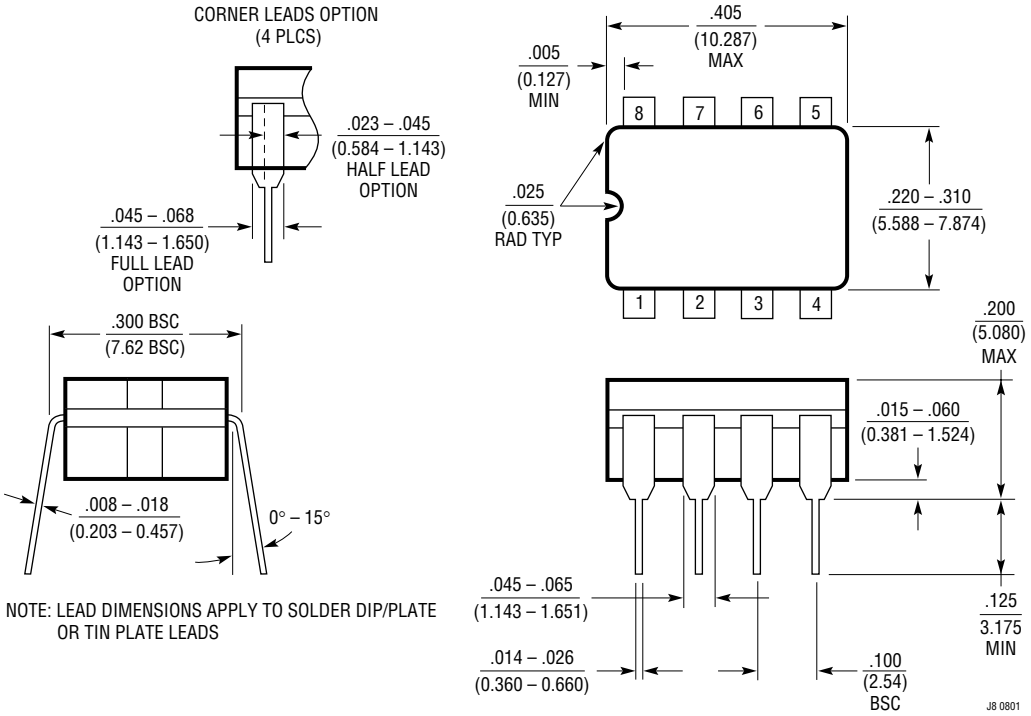

PACKAGE DESCRIPTION

N8 Package
8-Lead PDIP (Narrow .300 Inch)
(Reference LTC DWG # 05-08-1510)

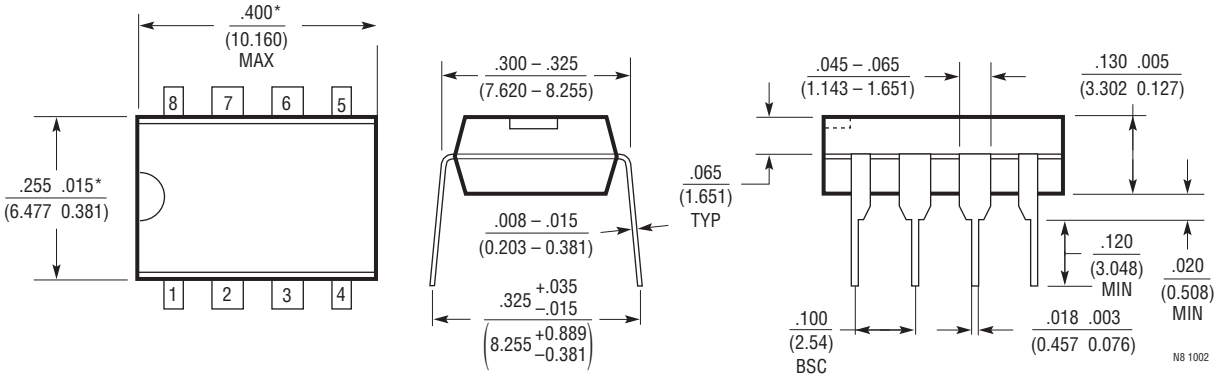

NOTE:
1. DIMENSIONS ARE $\frac{\text{INCHES}}{\text{MILLIMETERS}}$
*THESE DIMENSIONS DO NOT INCLUDE MOLD FLASH OR PROTRUSIONS.
MOLD FLASH OR PROTRUSIONS SHALL NOT EXCEED .010 INCH (0.254mm)

S8 Package
8-Lead Plastic Small Outline (Narrow .150 Inch)
(Reference LTC DWG # 05-08-1610)

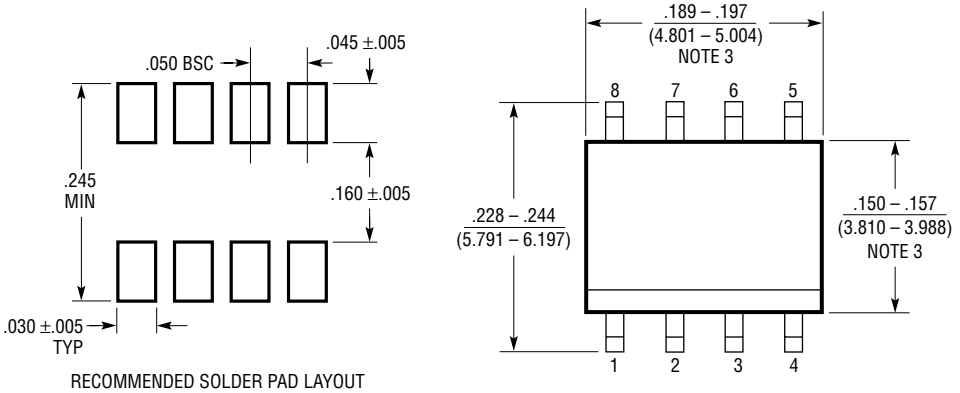

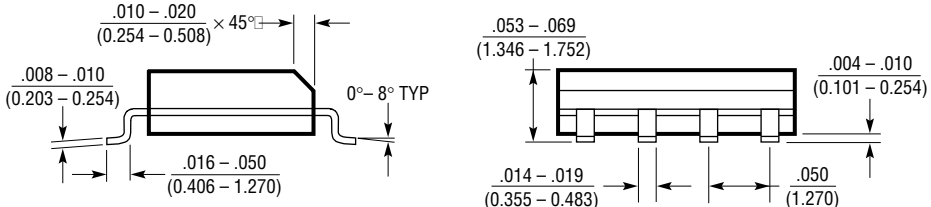

NOTE:
1. DIMENSIONS IN $\frac{\text{INCHES}}{\text{(MILLIMETERS)}}$
2. DRAWING NOT TO SCALE
3. THESE DIMENSIONS DO NOT INCLUDE MOLD FLASH OR PROTRUSIONS.
MOLD FLASH OR PROTRUSIONS SHALL NOT EXCEED .006" (0.15mm)

SO8 0303

REVISION HISTORY (Revision history begins at Rev I)

REV	DATE	DESCRIPTION	PAGE NUMBER
I	4/11	Removed lead free version of LTC485MJ8 from Order Information section.	2

Information furnished by Linear Technology Corporation is believed to be accurate and reliable. However, no responsibility is assumed for its use. Linear Technology Corporation makes no representation that the interconnection of its circuits as described herein will not infringe on existing patent rights.

RELATED PARTS

PART NUMBER	DESCRIPTION	COMMENTS
LTC486/LTC487	Low Power Quad RS485 Drivers	110µA Supply Current
LTC488/LTC489	Low Power Quad RS485 Receivers	7mA Supply Current
LTC490/LTC491	Low Power Full-Duplex RS485 Transceivers	300µA Supply Current
LTC1480	3.3V Supply RS485 Transceiver	Lower Supply Voltage
LTC1481	Low Power RS485 Transceiver with Shutdown	Lowest Power
LTC1482	RS485 Transceiver with Carrier Detect	±15kV ESD, Fail-Safe
LTC1483	Low Power, Low EMI RS485 Transceiver	Slew Rate Limited Driver Outputs, Lowest Power
LTC1484	RS485 Transceiver with Fail-Safe	±15kV ESD, MSOP Package
LTC1485	10Mbps RS485 Transceiver	High Speed
LTC1518/LTC1519	52Mbps Quad RS485 Receivers	Higher Speed, LTC488/LTC489 Pin-Compatible
LTC1520	LVDS-Compatible Quad Receiver	100mV Threshold, Low Channel-to-Channel Skew
LTC1535	2500V Isolated RS485 Transceiver	Full-Duplex, Self-Powered Using External Transformer
LTC1685	52Mbps RS485 Transceiver	Industry-Standard Pinout, 500ps Propagation Delay Skew
LTC1686/LTC1687	52Mbps Full-Duplex RS485 Transceivers	LTC490/LTC491 Pin Compatible
LTC1688/LTC1689	100Mbps Quad RS485 Drivers	Highest Speed, LTC486/LTC487 Pin Compatible
LTC1690	Full-Duplex RS485 Transceiver with Fail-Safe	±15kV ESD, LTC490 Pin Compatible
LT1785/LTC1785A	±60V Protected RS485 Transceivers	±15kV ESD, Fail-Safe (LT1785A)
LT1791/LTC1791A	±60V Protected Full-Duplex RS485 Transceivers	±15kV ESD, Fail-Safe (LT1791A)
LTC2850/LTC2851/ LTC2852	3.3V Supply RS485 Transceivers	±15kV ESD, 20Mbps, 900µA Supply Current, Fail-Safe
LTC2854/LTC2855	3.3V Supply RS485 Transceivers	±15kV ESD, 20Mbps, 900µA Supply Current, Integrated Switchable Termination
LTC2856/LTC2857/ LTC2858	20Mbps RS485 Transceivers	±15kV ESD, 900µA Supply Current, Fail-Safe
LTC2859/LTC2861	20Mbps RS485 Transceivers	±15kV ESD, 900µA Supply Current, Integrated Switchable Termination

Linear Technology Corporation
1630 McCarthy Blvd., Milpitas, CA 95035-7417
(408) 432-1900 • FAX: (408) 434-0507 • www.linear.com
LT 0411 REV I • PRINTED IN USA
© LINEAR TECHNOLOGY CORPORATION 1994