Laser Photoelectric Sensor with Built-in Amplifier

E3Z-Laser

Compact photoelectric sensor with LASER light

The E3Z LASER sensor in compact plastic housing features visible LASER light for precision positioning and detection applications.

- Visible LASER light for precision positioning and small object detection
- High power LED for high functional reserve

Features

Through-beam and Retroreflective Sensors

Greatly Enhanced Beam Visibility for Easier Optical Axis Adjustment of Sensors

- The optical design maximizes the linear propagation of laser beams. Red laser beams (class 1) can be precisely aligned on the targeted position.
- The functional reserve of the rated through-beam sensing distance of 60 m provides sufficient allowance, enabling Through-beam Models to be used reliability even in dusty environments.

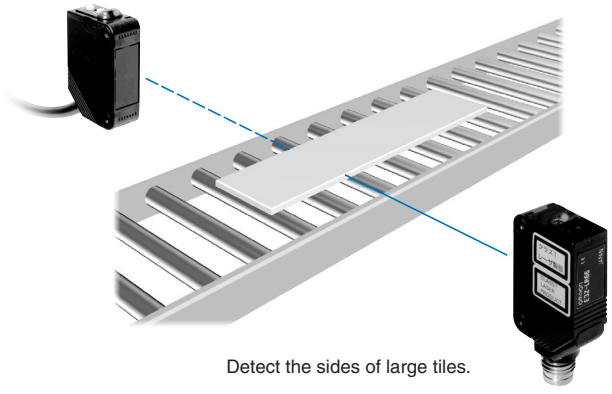

Detect the sides of large tiles.

Reliable Detection of Small Objects and Narrow Gaps with the Small Spot

- The spot diameter for Through-beam and Retro-reflective Models is 5 mm (a typical example at 3 m), making it possible to detect small workpieces at long distances.
- The sensing distance for Retro-reflective Models is 15 m (when an E39-R1S Reflector is used). This is the longest leeway in the industry.

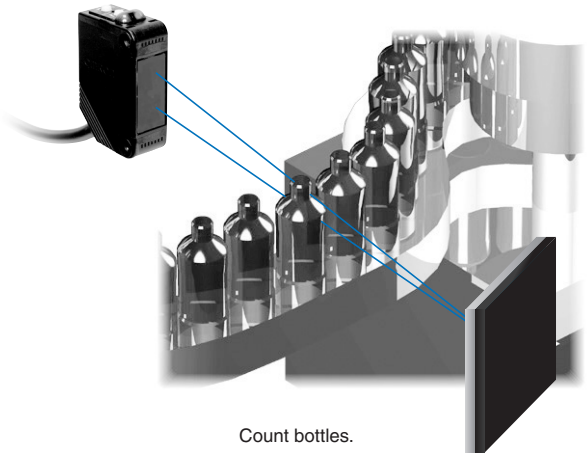

Count bottles.

sales@prom-elec.com / ООО ПРОМЭЛЕКТРОНИКА

BGS Models

Long-distance Sensing at 300 mm (White Paper)

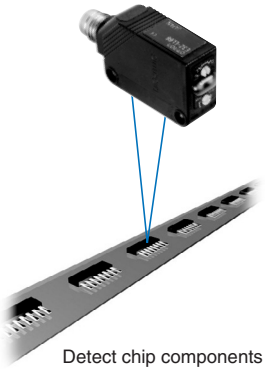

Detect chip components on tape.

A Low Black/White Error for Applications with Mixed Colors

- A black/white error as low as 5% makes detection and operation more stable.

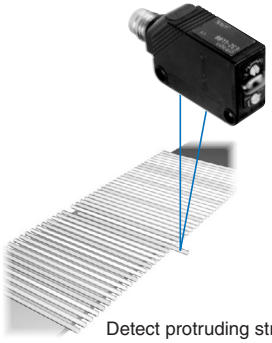

Detect protruding straws.

Easy Detection of Small Workpieces and Minor Differences in Levels with the Small Spot

- Stable detection is possible with no influence from a glossy background frame.
- The spot diameter for BGS models is 0.5 mm (typical example at 300 mm). Combined with an hysteresis of only 5%, even minute differences can be detected.
- Models with a response time of 0.5 ms (E3Z-LL□3/□8) are available as standard models for fast-moving objects.

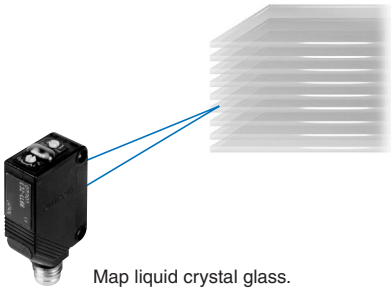

Map liquid crystal glass.

Advanced Optical Technology of the E3Z Laser

Laser beam directional deviation can be suppressed and spot diameters can be freely customized. This is achieved through high-precision alignment technology based on LD and emitter lens modularization. The lens position can be adjusted inline. (Patent pending.)

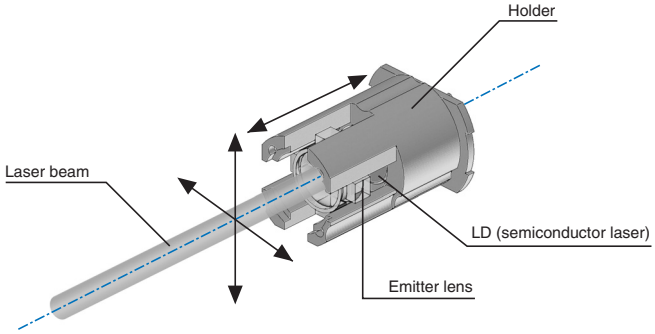

Laser Diagram Conceptual Diagram

By precisely adjusting the emitter lens in the vertical, horizontal, and depth directions, alignment can be achieved with minimal directional deviation (to ±1 degree).

Ordering Information

Sensors

Red light

Sensing method	Appearance	Connection method	Response time	Sensing distance	Model	
					NPN output	PNP output
Through-beam		Pre-wired (2 m)*1	1 ms	60 m *2	**E3Z-LT61**	**E3Z-LT81**
		Standard M8 Connector			**E3Z-LT66**	**E3Z-LT86**
Retro-reflective with MSR function	*3	Pre-wired (2 m)*1		15 m (300 mm) (Using E39-R1) 7 m (200 mm) (Using E39-R12) 7 m (200 mm) (Using E39-R6) *4	**E3Z-LR61**	**E3Z-LR81**
		Standard M8 Connector			**E3Z-LR66**	**E3Z-LR86**
Distance-settable (BGS Models)		Pre-wired (2 m)*1		20 to 40 mm (Min. distance set) 20 to 300 mm (Max. distance set)	**E3Z-LL61**	**E3Z-LL81**
		Standard M8 Connector			**E3Z-LL66**	**E3Z-LL86**
		Pre-wired (2 m)*1	0.5 ms	25 to 40 mm (Min. distance set) 25 to 300 mm (Max. distance set)	**E3Z-LL63**	**E3Z-LL83**
		Standard M8 Connector			**E3Z-LL68**	**E3Z-LL88**

*1. Pre-wired Models with a 0.5-m cable are also available for these products. When ordering, specify the cable length by adding "0.5M" to the end of the model number (e.g., E3Z-LT61 0.5M).
M12 Pre-wired Connector Models are also available. When ordering, add "-M1J" to the end of the model number (e.g., E3Z-LT61-M1J). The cable is 0.3 m long.
The following connection forms are also available. Ask your OMRON representative for details.
Pre-wired Models with 1-m or 5-m cables
Pre-wired Connector Models with M8 4-pin connectors, M8 3-pin connectors.
*2. Consult with your OMRON representative if a distance of more than 10 m is required. Models with large custom-size spots can be produced. These make optical axis adjustment easier and allow the beam to be received more stably by the Receiver even if vibration is present.
*3. The Reflector is sold separately. Select the Reflector model most suited to the application.
*4. Values in parentheses indicate the minimum required distance between the Sensor and Reflector.

Accessories (Order Separately)

Slits (for E3Z-LT□□)

Slit width	Sensing distance	Minimum detectable object (typical)	Model	Contents
0.5 mm dia.	3 m	0.1 mm dia.	**E39-S65A**	One set (contains Slits for both the Emitter and Receiver)

Reflectors (for E3Z-LR□□)

Name	Sensing distance (typical)	Model	Remarks
Reflector	15 m (300 mm)	**E39-R1S**	• Retro-reflective models are not provided with Reflectors. • Separate the Sensor and the Reflector by at least the distance given in parentheses. • The MSR function is enabled.
	7 m (200 mm)	**E39-R12**	
	7 m (200 mm)	**E39-R6**	

Mounting Brackets

Appear-ance	Model	Quantity	Remarks	Appear-ance	Model	Quantity	Remarks
	E39-L153	1	Mounting Brackets		**E39-L98**	1	Metal Protective Cover Bracket *1
	E39-L104	1			**E39-L150**	1 set	(Sensor adjuster) Easily mounted to the aluminum frame rails of conveyors and easily adjusted. For left to right adjustment
	E39-L43	1	Horizontal Mounting Bracket*1		**E39-L151**	1 set	
	E39-L142	1	Horizontal Protective Cover Bracket*1				
	E39-L44	1	Rear Mounting Bracket		**E39-L144**	1	Compact Protective Cover Bracket (For E3Z only) *1

*1. Cannot be used for Standard Connector models.

Note: When using Through-beam models, order one bracket for the Receiver and one for the Emitter.

Sensor I/O Connectors

(Please refer to accessary datasheet E26E-EN-01 for a complete overview of all available sensor connectors)

Size	Cable	Appearance		Cable type		Model
M8	Standard	Straight		2 m	4-wire	**XS3F-M421-402-A**
				5 m		**XS3F-M421-405-A**
		L-shaped		2 m		**XS3F-M422-402-A**
				5 m		**XS3F-M422-405-A**
M12 (For -M1J models)		Straight		2 m	3-wire	**XS2F-D421-DC0-A**
				5 m		**XS2F-D421-GC0-A**
		L-shaped		2 m		**XS2F-D422-DC0-A**
				5 m		**XS2F-D422-GC0-A**

Ratings and Specifications

Sensing method		Through-beam	Retro-reflective with MSR function	Distance-settable (BGS models)	
Response		Standard response			High-speed response
Item: Model	NPN output	E3Z-LT61/-LT66	E3Z-LR61/-LR66	E3Z-LL61/-LL66	E3Z-LL63/-LL68
	PNP output	E3Z-LT81/-LT86	E3Z-LR81/-LR86	E3Z-LL81/-LL86	E3Z-LL83/-LL88
Sensing distance		60 m *1	0.3 to 15 m (when using E39-R1) 0.2 to 7 m (when using E39-R12) 0.2 to 7 m (when using E39-R6)	White paper (100 × 100 mm): 20 to 300 mm Black paper (100 × 100 mm): 20 to 160 mm	White paper (100 × 100 mm): 25 to 300 mm Black paper (100 × 100 mm): 25 to 100 mm
Set distance range		---		White paper (100 × 100 mm): 40 to 300 mm Black paper (100 × 100 mm): 40 to 160 mm	White paper (100 × 100 mm): 40 to 300 mm Black paper (100 × 100 mm): 40 to 100 mm
Spot diameter (typical)		5 mm dia. at 3 m		0.5 mm dia. at 300 mm	
Standard sensing object		Opaque: 12 mm dia. min.	Opaque: 75 mm dia. min.	---	
Minimum detectable object (typical)		6 mm dia. opaque object at 3 m		0.2 mm dia. stainless-steel pin gauge at 300 mm	
Differential travel		---		5% max. of set distance	
Black/white error		---		5% at 160 mm	5% at 100 mm
Directional angle		Receiver: 3 to 15°	---		
Light source (wavelength)		Red LED (655 nm), JIS CLass 1, IEC Class 1, FDA Class II			
Power supply voltage		12 to 24 VDC±10%, ripple (p-p): 10% max.			
Current consumption		Emitter: 15 mA Receiver: 20 mA	30 mA max.		
Control output		Load power supply voltage: 26.4 VDC max., Load current: 100 mA max., Open collector output			
Residual output voltage		Load current of less than 10 mA: 1 V max. Load current of 10 to 100 mA: 2 V max.			
Output mode switching		Switch to change between light-ON and dark-ON			
Protection circuits		Reversed power supply polarity protection, Output short-circuit protection, and Reversed output polarity protection	Reversed power supply polarity protection, Output short-circuit protection, Mutual interference prevention, and Reversed output polarity protection		
Response time		Operate or reset: 1 ms max.			Operate or reset: 0.5 ms max.
Sensitivity adjustment		One-turn adjuster		Five-turn endless adjuster	
Ambient illumination (Receiver side)		Incandescent lamp: 3,000 lx max. Sunlight: 10,000 lx max.			
Ambient temperature range		Operating: -10 to 55 °C, Storage: -25 to 70 °C (with no icing or condensation)			
Ambient humidity range		Operating: 35% to 85%, Storage: 35% to 95% (with no icing or condensation)			
Insulation resistance		20 MΩ min. at 500 VDC			
Dielectric strength		1,000 VAC, 50/60 Hz for 1 min			
Vibration resistance		Destruction: 10 to 55 Hz, 1.5 mm double amplitude for 2 hours each in X, Y, and Z directions			
Shock resistance		Destruction: 500 m/s^2 3 times each in X, Y, and Z directions			
Degree of protection		IP67 (IEC 60529)			
Connection method		Pre-wired cable (standard length: 2 m): E3Z-L□□1/-L□□3 Standard M8 Connector: E3Z-L□□6/-L□□8			
Indicator		Operation indicator (orange) Stability indicator (green) Emitter for Through-bream Models has power indicator (orange) only.			

Sensing method			Through-beam	Retro-reflective with MSR function	Distance-settable (BGS models)	
Response			Standard response			High-speed response
Item	Model	NPN output	E3Z-LT61/-LT66	E3Z-LR61/-LR66	E3Z-LL61/-LL66	E3Z-LL63/-LL68
		PNP output	E3Z-LT81/-LT86	E3Z-LR81/-LR86	E3Z-LL81/-LL86	E3Z-LL83/-LL88
Weight (packed state)	Pre-wired cable (2 m)		Approx. 120 g	Approx. 65 g		
	Standard Connector		Approx. 30 g	Approx. 20 g		
Material	Case		PBT (polybutylene terephthalate)			
	Lens		Modified polyarylate resin	Methacrylic resin	Modified polyarylate resin	
Accessories			Instruction manual (Neither Reflectors nor Mounting Brackets are provided with any of the above models.)			

*1. Consult with your OMRON representative if a distance of more than 10 m is required. Models with large custom-size spots can be produced. These make optical axis adjustment easier and allow the beam to be received more stably by the Receiver even if vibration is present.

Note: An emission stop function can be added to Through-beam Models as a custom function. Ask your OMRON representative for details.

Engineering Data (Typical)

Parallel Operating Range

Through-beam Models

E3Z-LT□□

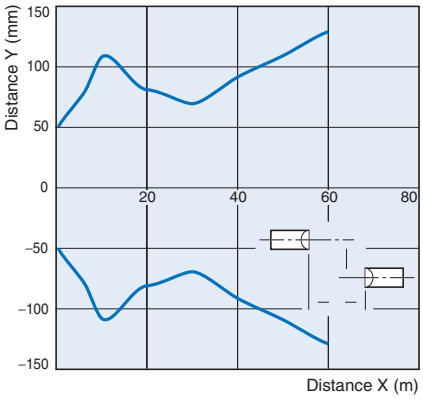

Retro-reflective Models for transparent objects

E3Z-LR□□

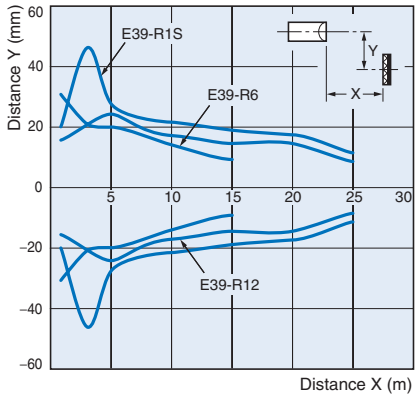

Operating Range at a Set Distance of 300 mm

BGS Models

E3Z-LL□□

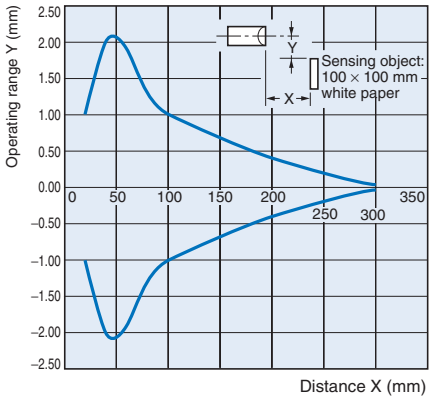

Operating Range at a Set Distance of 40 mm

BGS Models

E3Z-LL□□

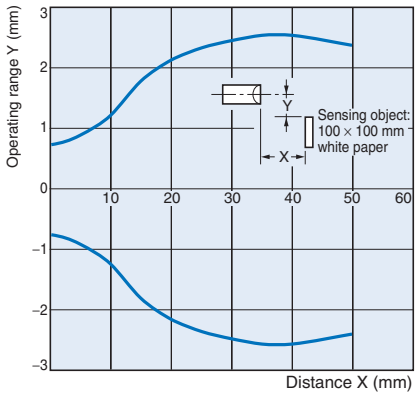

Excess Gain vs. Set Distance

Through-beam Models

E3Z-LT□□

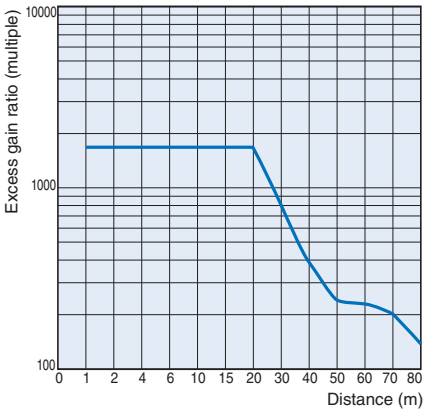

Retro-reflective Models

E3Z-LR□□

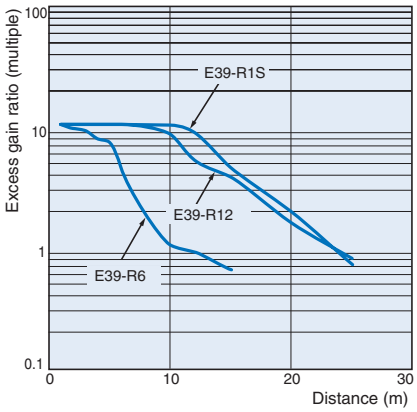

Close Range Characteristics

BGS Models

E3Z-LL□1/-LL□6

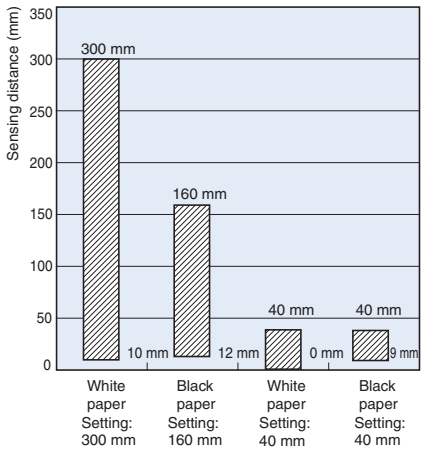

E3Z-LL□3/-LL□8

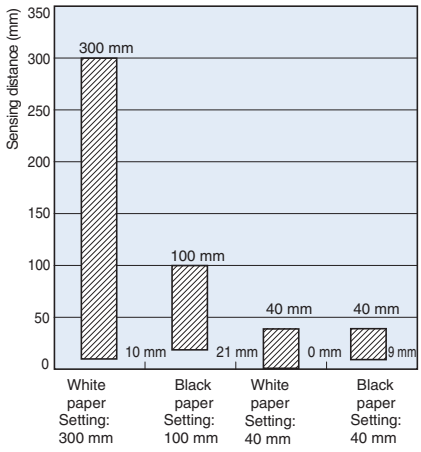

Sensing Distance vs. Sensing Object Material

BGS Models

E3Z-LL□1/-LL□6
White Paper with a Set Distance of 40 mm

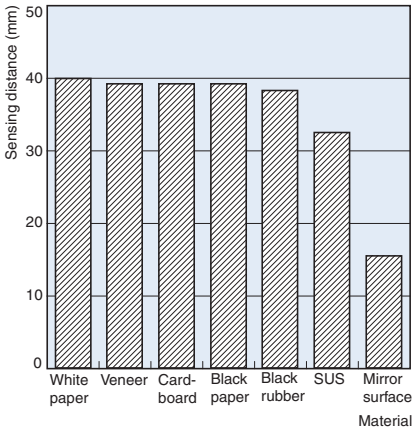

E3Z-LL□3/-LL□8
White Paper with a Set Distance of 40 mm

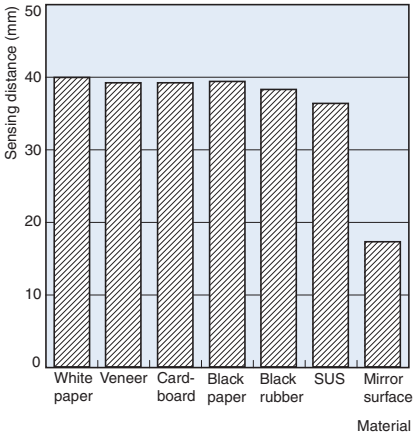

E3Z-LL□1/-LL□6
White Paper with a Set Distance of 300 mm

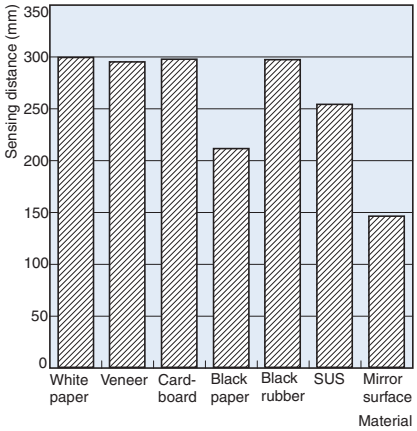

E3Z-LL□3/-LL□8
White Paper with a Set Distance of 100 mm

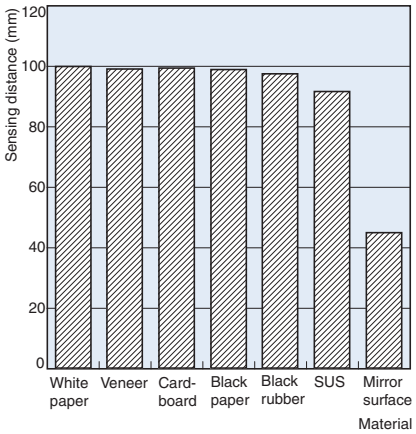

Emission Spot Diameter vs. Distance

Through-beam and Retro-reflective Models (Same for All Models)

E3Z-LT□□

E3Z-LR□□

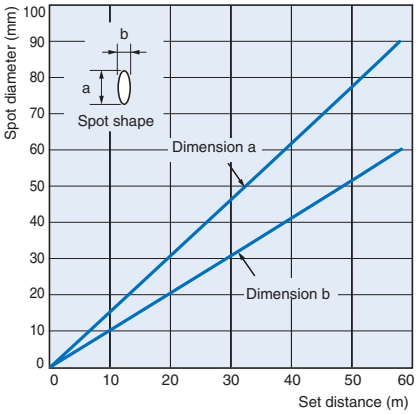

BGS Models (Same for All Models)

E3Z-LL□□

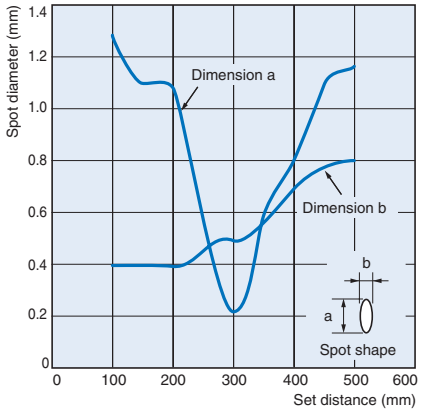

Error vs. Distance

BGS Models

E3Z-LL□1(LL□6)

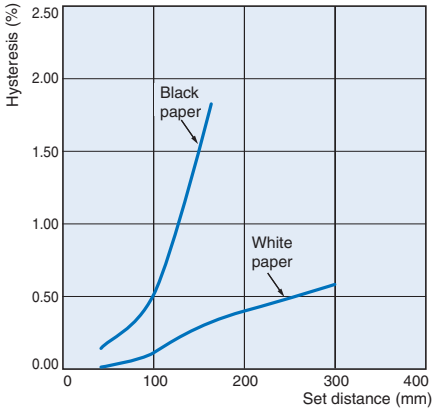

E3Z-LL□3(LL□8)

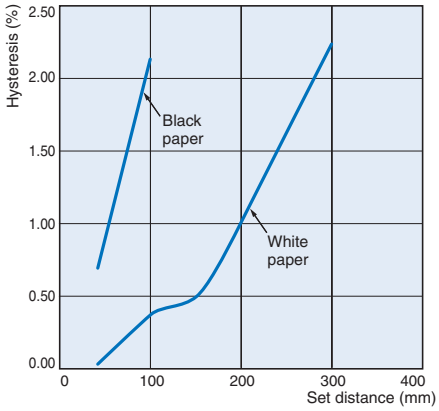

Angle Characteristics (Vertical)

BGS Models

E3Z-LL□

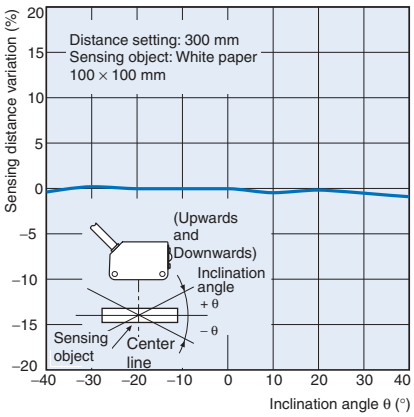

Angle Characteristics (Vertical)

BGS Models

E3Z-LL□

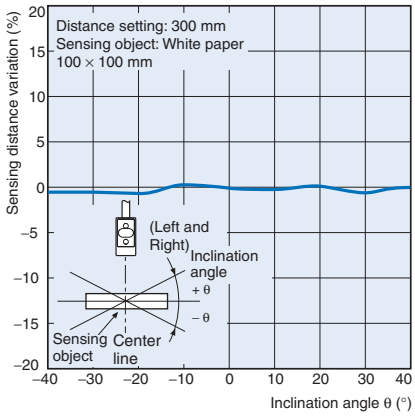

I/O Circuit Diagrams

NPN output

Model	Operation mode	Timing charts	Mode selector switch	Output circuit
E3Z-LT61 E3Z-LT66 E3Z-LR61 E3Z-LR66	Light ON	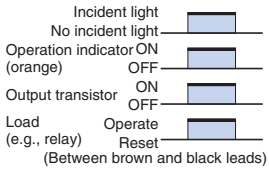	L side (LIGHT ON)	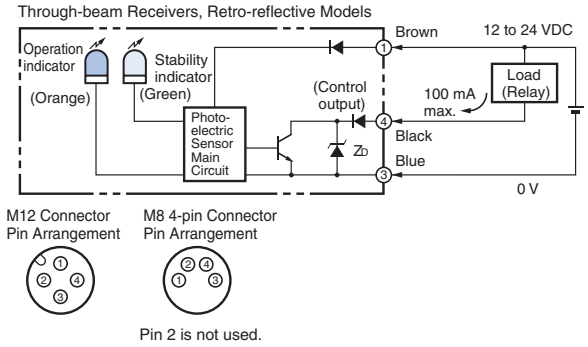
	Dark ON	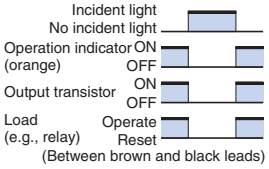	D side (DARK ON)	
	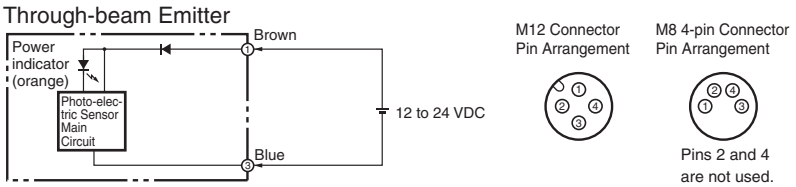		
E3Z-LL61 E3Z-LL66 E3Z-LL63 E3Z-LL68	Light ON	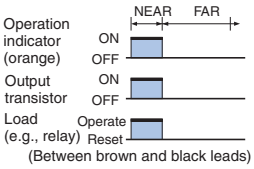	L side (LIGHT ON)	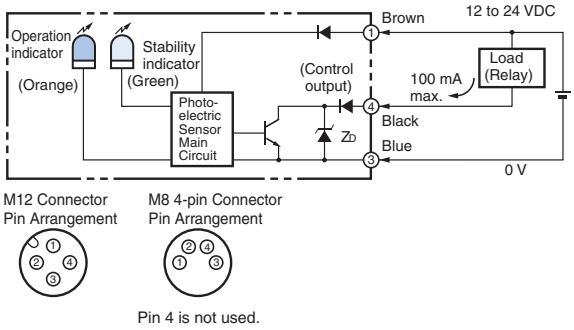
	Dark ON	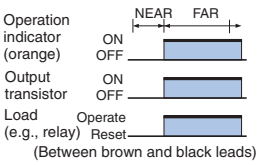	D side (DARK ON)	

PNP output

Model	Operation mode	Timing chart	Mode selector switch	Output circuit
E3Z-LT81 E3Z-LT86 E3Z-LR81 E3Z-LR86	Light ON	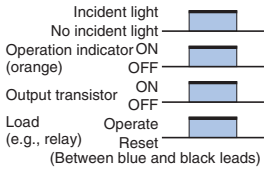	L side (LIGHT ON)	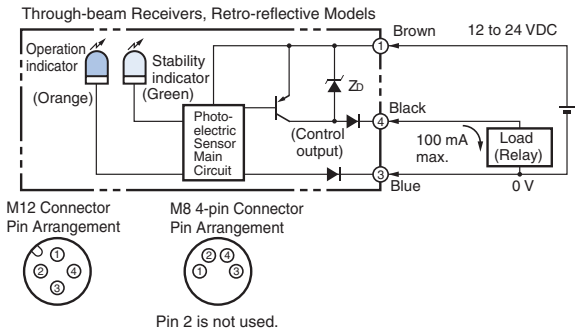
	Dark ON	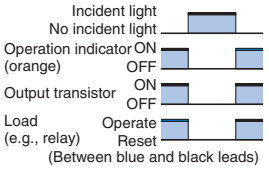	D side (DARK ON)	
	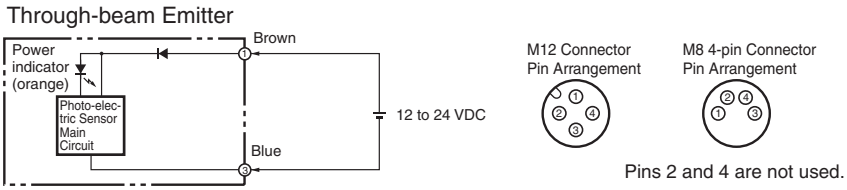		

Model	Operation mode	Timing chart	Mode selector switch	Output circuit
E3Z-LL81 E3Z-LL86 E3Z-LL83 E3Z-LL88	Light ON	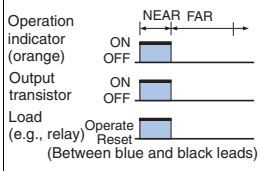	L side (LIGHT ON)	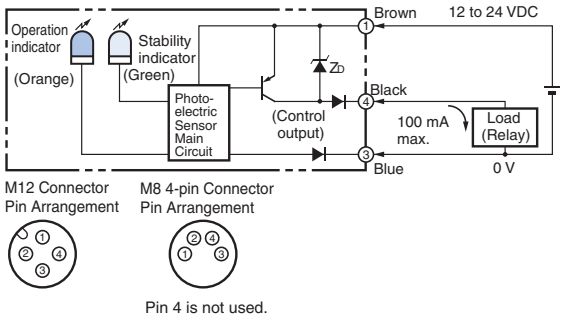
	Dark ON	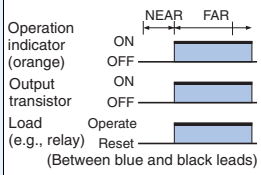	D side (DARK ON)	

Plugs (Sensor I/O Connectors)

M8 4-pin Connectors

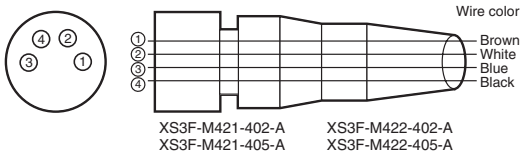

M12 Connectors

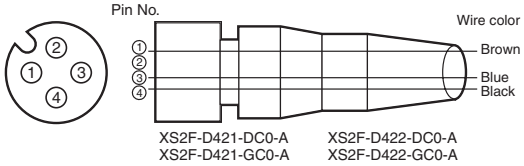

Nomenclature

Sensors with Sensitivity Adjustment and Mode Selector Switch

Through-beam Models

E3Z-LT□□ (Receiver)

Retro-reflective Models

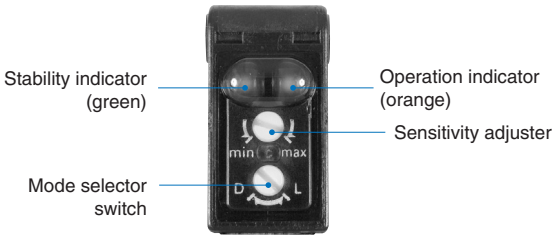

Distance-settable Sensor

BGS Models

E3Z-LL□□

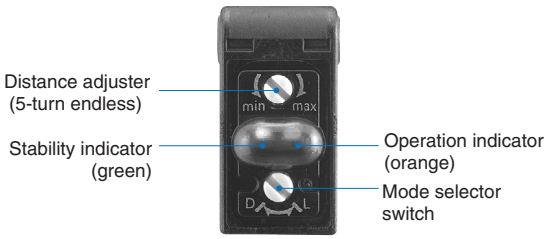

Safety Precautions

Refer to *Warranty and Limitations of Liability* on page 20.

⚠ Warning

This product is not designed or rated for ensuring safety of persons. Do not use it for such purpose.

To ensure safe use of laser products, do not allow the laser beam to enter your eye. Direct exposure may adversely affect your eyesight.

⚠ Caution

Do not connect an AC power supply to the Sensor. If AC power (100 VAC or more) is supplied to the Sensor, it may explode or burn.

Precautions for Safe Use

Be sure to abide by the following precautions for the safe operation of the Sensor.

Operating Environment

Do not use the Sensor in locations with explosive or flammable gas.

Wiring

Power Supply Voltage and Output Load Power Supply Voltage

Make sure that the power supply to the Sensor is within the rated voltage range. If a voltage exceeding the rated voltage range is supplied to the Sensor, it may explode or burn.

Power Supply Voltage

The maximum power supply voltage is 26.4 VDC. Applying a voltage exceeding the rated range may damage the Sensor or cause burning.

Load

Do not use a load that exceeds the rated load.

Load Short-circuiting

Do not short-circuit the load, otherwise the Sensor may be damaged or it may burn.

Connection without Load

Do not connect the power supply to the Sensor with no load connected, otherwise the internal elements may explode or burn. Always connect a load when wiring.

Correct Use

Do not use the product in atmospheres or environments that exceed product ratings.

Usage Environment

Water Resistance

The Sensor is rated IP67. Do not use it in water, in the rain, or outdoors.

Ambient Environment

Do not install the product in the following locations. Doing so may result in product failure or malfunction.

- Locations subject to excess dust and dirt
- Locations subject to direct sunlight
- Locations subject to corrosive gas
- Locations subject to organic solvents
- Locations subject to shock or vibration
- Locations subject to exposure to water, oil, or chemicals
- Locations subject to high humidity or condensation

Designing

Power Reset Time

The Sensor is ready to operate 100 ms after the Sensor is turned ON. If the load and Sensor are connected to independent power supplies respectively, be sure to turn ON the Sensor before supplying power to the load.

Wiring

Avoiding Malfunctions

If using the Sensor with an inverter or servomotor, always ground the FG (frame ground) and G (ground) terminals, otherwise the Sensor may malfunction.

Mounting

Mounting the Sensor

- If Sensors are mounted face-to-face, make sure that the optical axes are not in opposition to each other. Otherwise, mutual interference may result.
- Always install the Sensor carefully so that the aperture angle range of the Sensor will not cause it to be directly exposed to intensive light, such as sunlight, fluorescent light, or incandescent light.
- Do not strike the Photoelectric Sensor with a hammer or any other tool during the installation of the Sensor, or the Sensor will lose its water-resistive properties.
- Use M3 screws to mount the Sensor.
- When mounting the case, make sure that the tightening torque applied to each screw does not exceed 0.54 N·m.

Metal Connectors

- Always turn OFF the power supply to the Sensor before connecting or disconnecting the metal connector.
- Hold the connector cover to connect or disconnect it.
- Secure the connector cover by hand. Do not use pliers, otherwise the connector may be damaged.
- Use a tightening torque of 0.3 to 0.4 N·m for M8 connectors and 0.4 to 0.5 N·m for M12 connectors. Vibration may cause the connectors to become loose and reduce the degree or protection is the tightening torque is not sufficient.

Mounting Direction for Distance-settable Models

- Make sure that the sensing side of the Sensor is parallel with the surface of the sensing objects. Normally, do not incline the Sensor towards the sensing object.

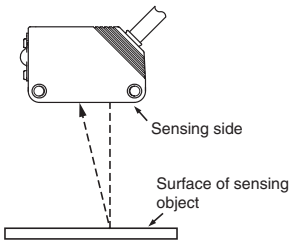

If the sensing object has a glossy surface, however, incline the Sensor by 5° to 10° as shown in the illustration, provided that the Sensor is not influenced by background objects.

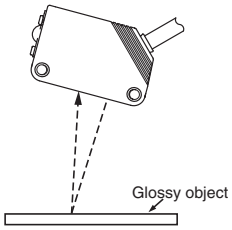

- If there is a mirror-like object below the Sensor, the Sensor may not operate stably. Therefore, incline the Sensor or separate the Sensor from the mirror-like object as shown below.

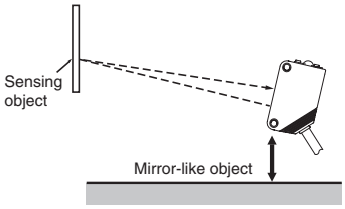

- Do not install the Sensor in the wrong direction. Refer to the following illustration.

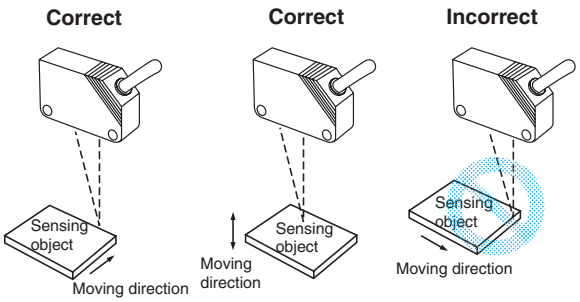

Install the Sensor as shown in the following illustration if each sensing object greatly differs in color or material.

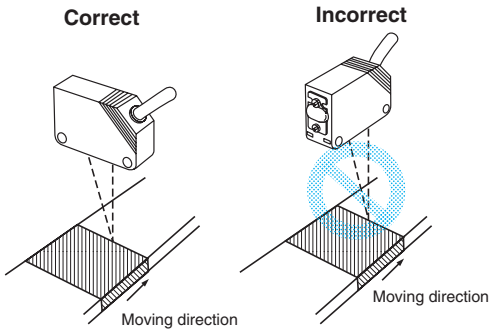

Adjusting Distance-settable Models

Indicator Operation

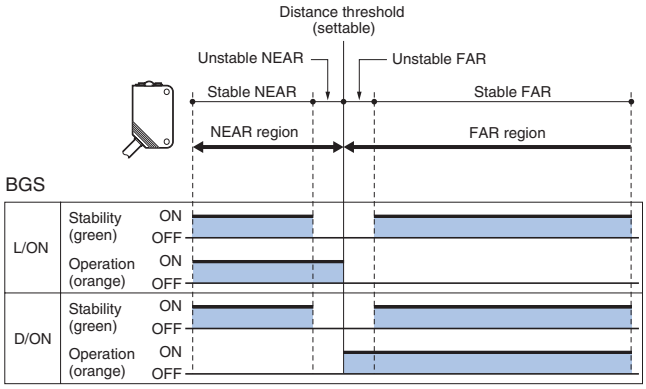

Note: If the stability indicator is lit, the detection/no detection status is stable within the rated ambient operating temperature (-10 to 55° C).

Inspection and Maintenance

Cleaning

Never use paint thinners or other organic solvents to clean the surface of the product.

Dimensions (Unit: mm)

Sensors

Through-beam

Pre-wired Models

E3Z-LT61

E3Z-LT81

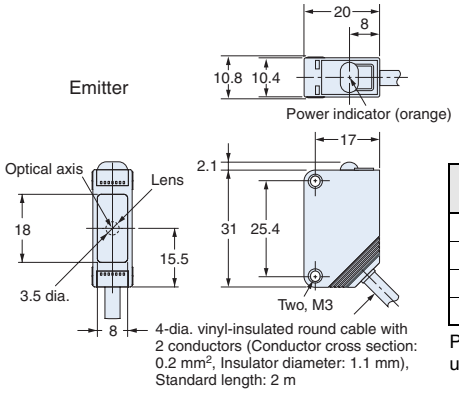

Terminal No.	Specifications
1	+V
2	---
3	0 V
4	---

Pins 2 and 4 are not used.

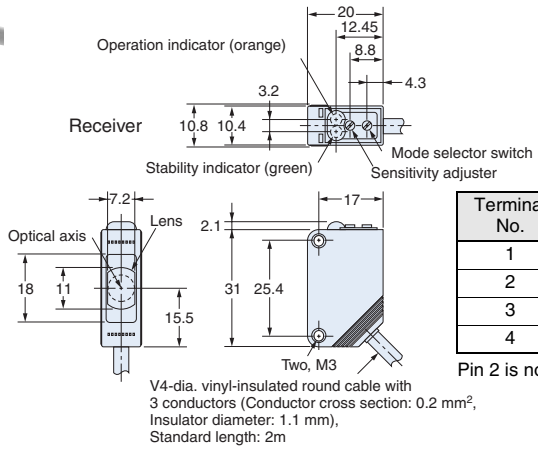

Terminal No.	Specifications
1	+V
2	---
3	0 V
4	Output

Pin 2 is not used.

M12 Pre-wired Connector
(E3Z-LT□□-M1J)

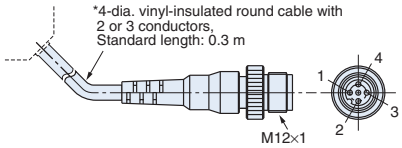

M8 Pre-wired Connector
(Ask your OMRON representative for details.)

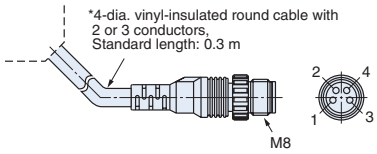

* The Emitter cable has two conductors and the Receiver cable has three conductors.

Through-beam

Standard Connector Models

E3Z-LT66

E3Z-LT86

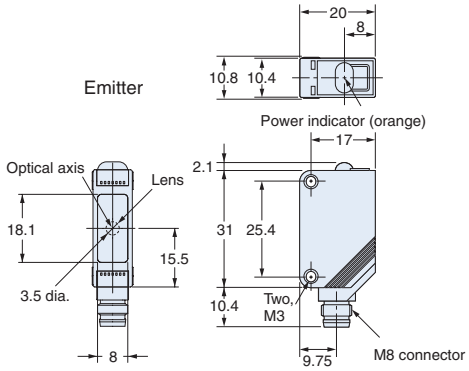

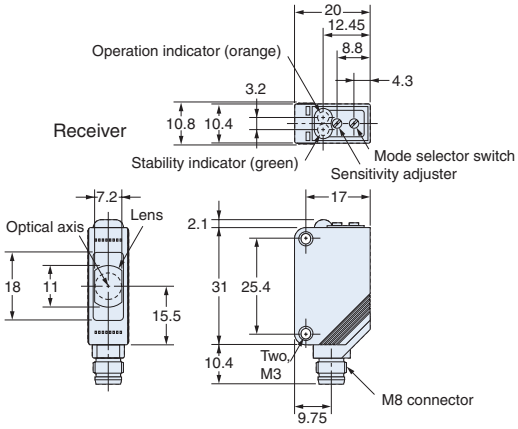

Retro-reflective Models

Pre-wired Models

E3Z-LR61

E3Z-LR81

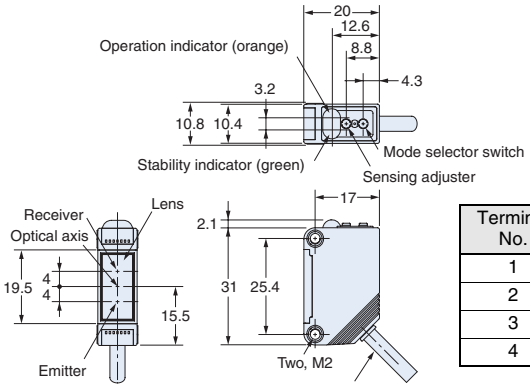

4-dia. vinyl-insulated round cable with 2 conductors (Conductor cross section: 0.2 mm^2, Insulator diameter: 1.1 mm), Standard length: 2m

Terminal No.	Specifi-cations
1	+V
2	---
3	0 V
4	Output

M12 Pre-wired Connector
(E3Z-LR□□-M1J)

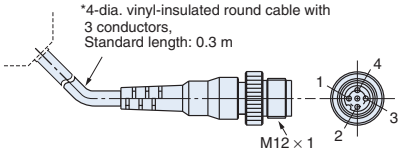

M8 Pre-wired Connector
(Ask your OMRON representative for details.)

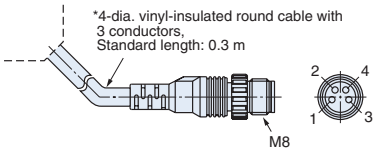

Retro-reflective Models

Standard Connector Models

E3Z-LR66

E3Z-LR86

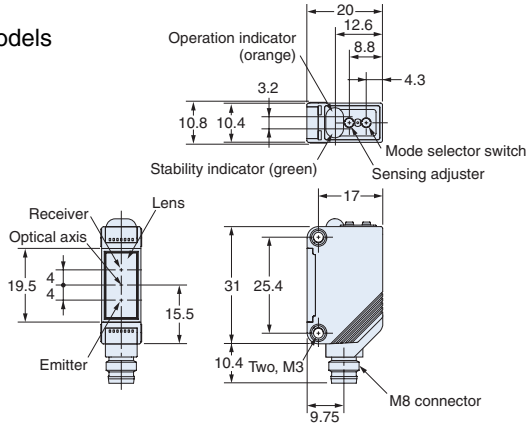

BGS Models

Pre-wired Models

E3Z-LL61

E3Z-LL81

E3Z-LL63

E3Z-LL83

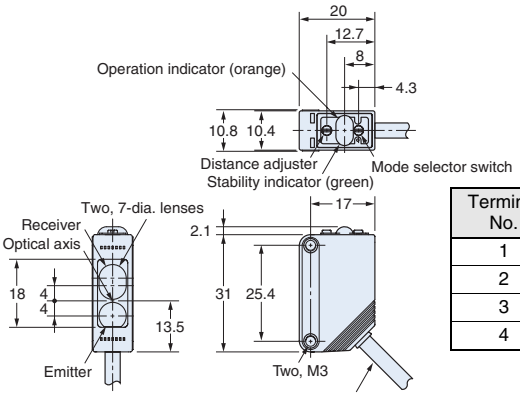

4-dia. vinyl-insulated round cable with 4 conductors (Conductor cross section: 0.2 mm^2, Insulator diameter: 1.1 mm), Standard length: 0.5 m, 2m

Terminal No.	Specifi-cations
1	+V
2	---
3	0 V
4	Output

M12 Pre-wired Connector
(E3Z-LL□□-M1J)

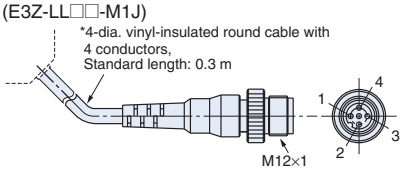

M8 Pre-wired Connector
(Ask your OMRON representative for details.)

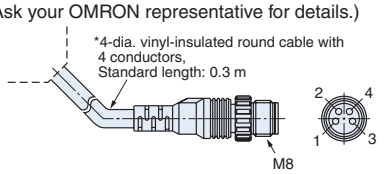

BGS Models

Standard M8 Connector Models

E3Z-LL66

E3Z-LL86

E3Z-LL68

E3Z-LL88

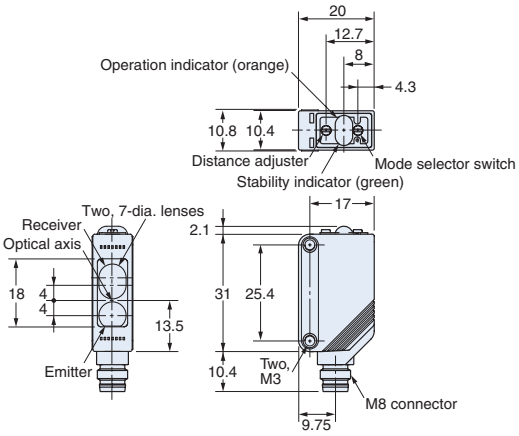

Accessories (Order Separately)

Slit

E39-S65A

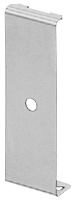

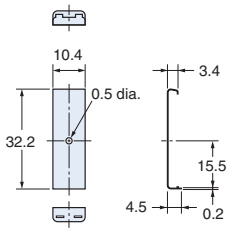

Material
SUS301 stainless steel

Reflector

E39-R1S

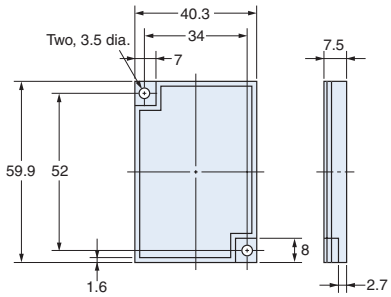

Materials
Reflective surface: Acrylic
Rear surface: ABS

Reflector

E39-R6

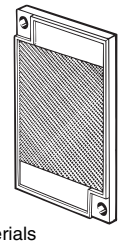

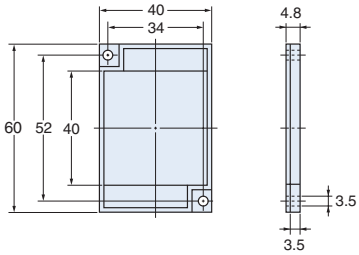

Materials
Reflective surface: Acrylic
Rear surface: ABS

Reflector

E39-R12

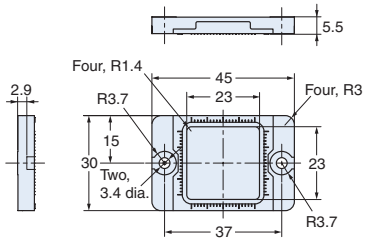

WARRANTY

OMRON's exclusive warranty is that the products are free from defects in materials and workmanship for a period of one year (or other period if specified) from date of sale by OMRON.

OMRON MAKES NO WARRANTY OR REPRESENTATION, EXPRESS OR IMPLIED, REGARDING NON-INFRINGEMENT, MERCHANTABILITY, OR FITNESS FOR PARTICULAR PURPOSE OF THE PRODUCTS. ANY BUYER OR USER ACKNOWLEDGES THAT THE BUYER OR USER ALONE HAS DETERMINED THAT THE PRODUCTS WILL SUITABLY MEET THE REQUIREMENTS OF THEIR INTENDED USE. OMRON DISCLAIMS ALL OTHER WARRANTIES, EXPRESS OR IMPLIED.

LIMITATIONS OF LIABILITY

OMRON SHALL NOT BE RESPONSIBLE FOR SPECIAL, INDIRECT, OR CONSEQUENTIAL DAMAGES, LOSS OF PROFITS OR COMMERCIAL LOSS IN ANY WAY CONNECTED WITH THE PRODUCTS, WHETHER SUCH CLAIM IS BASED ON CONTRACT, WARRANTY, NEGLIGENCE, OR STRICT LIABILITY.

In no event shall responsibility of OMRON for any act exceed the individual price of the product on which liability is asserted.

IN NO EVENT SHALL OMRON BE RESPONSIBLE FOR WARRANTY, REPAIR, OR OTHER CLAIMS REGARDING THE PRODUCTS UNLESS OMRON'S ANALYSIS CONFIRMS THAT THE PRODUCTS WERE PROPERLY HANDLED, STORED, INSTALLED, AND MAINTAINED AND NOT SUBJECT TO CONTAMINATION, ABUSE, MISUSE, OR INAPPROPRIATE MODIFICATION OR REPAIR.

SUITABILITY FOR USE

THE PRODUCTS CONTAINED IN THIS DOCUMENT ARE NOT SAFETY RATED. THEY ARE NOT DESIGNED OR RATED FOR ENSURING SAFETY OF PERSONS, AND SHOULD NOT BE RELIED UPON AS A SAFETY COMPONENT OR PROTECTIVE DEVICE FOR SUCH PURPOSES. Please refer to separate catalogs for OMRON's safety rated products.

OMRON shall not be responsible for conformity with any standards, codes, or regulations that apply to the combination of products in the customer's application or use of the product.

At the customer's request, OMRON will provide applicable third party certification documents identifying ratings and limitations of use that apply to the products. This information by itself is not sufficient for a complete determination of the suitability of the products in combination with the end product, machine, system, or other application or use.

The following are some examples of applications for which particular attention must be given. This is not intended to be an exhaustive list of all possible uses of the products, nor is it intended to imply that the uses listed may be suitable for the products:

- Outdoor use, uses involving potential chemical contamination or electrical interference, or conditions or uses not described in this document.
- Nuclear energy control systems, combustion systems, railroad systems, aviation systems, medical equipment, amusement machines, vehicles, safety equipment, and installations subject to separate industry or government regulations.
- Systems, machines, and equipment that could present a risk to life or property.

Please know and observe all prohibitions of use applicable to the products.

NEVER USE THE PRODUCTS FOR AN APPLICATION INVOLVING SERIOUS RISK TO LIFE OR PROPERTY WITHOUT ENSURING THAT THE SYSTEM AS A WHOLE HAS BEEN DESIGNED TO ADDRESS THE RISKS, AND THAT THE OMRON PRODUCT IS PROPERLY RATED AND INSTALLED FOR THE INTENDED USE WITHIN THE OVERALL EQUIPMENT OR SYSTEM.

PERFORMANCE DATA

Performance data given in this document is provided as a guide for the user in determining suitability and does not constitute a warranty. It may represent the result of OMRON's test conditions, and the users must correlate it to actual application requirements. Actual performance is subject to the OMRON Warranty and Limitations of Liability.

CHANGE IN SPECIFICATIONS

Product specifications and accessories may be changed at any time based on improvements and other reasons.

It is our practice to change model numbers when published ratings or features are changed, or when significant construction changes are made. However, some specifications of the product may be changed without any notice. When in doubt, special model numbers may be assigned to fix or establish key specifications for your application on your request. Please consult with your OMRON representative at any time to confirm actual specifications of purchased products.

DIMENSIONS AND WEIGHTS

Dimensions and weights are nominal and are not to be used for manufacturing purposes, even when tolerances are shown.

ERRORS AND OMISSIONS

The information in this document has been carefully checked and is believed to be accurate; however, no responsibility is assumed for clerical, typographical, or proofreading errors, or omissions.

PROGRAMMABLE PRODUCTS

OMRON shall not be responsible for the user's programming of a programmable product, or any consequence thereof.

Cat. No. E368-E2-01-X **In the interest of product improvement, specifications are subject to change without notice.**

OMRON EUROPE B.V.

Wegalaan 67-69,
NL-2132 JD, Hoofddorp,
The Netherlands
Phone: +31 23 568 13 00
Fax: +31 23 568 13 88
www.eu.omron.com