EVK-NORA-B1

Evaluation kit for NORA-B1 series modules

User guide

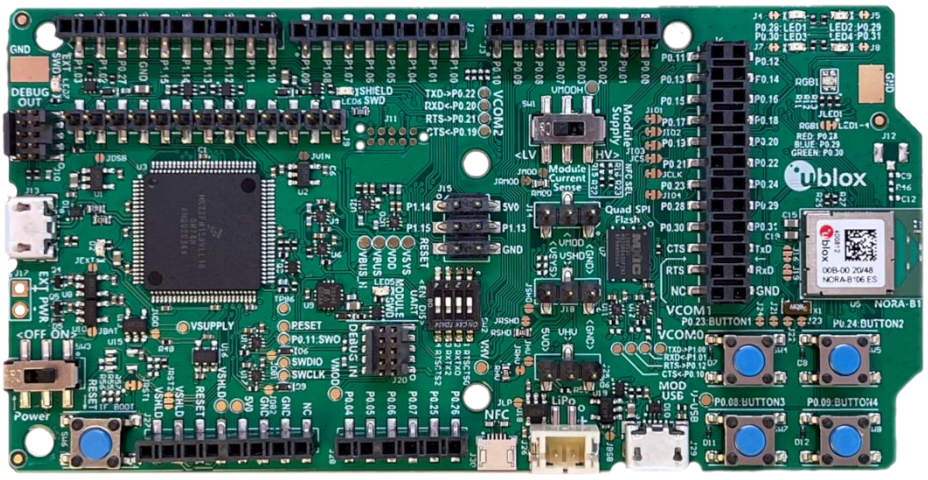

Abstract

This document describes how to set up the EVK-NORA-B100, EVK-NORA-B106, EVK_NORA-B126 and EVK_NORA_B120 evaluation kits to evaluate the NORA-B1 series modules. It also describes the different options for debugging and the development capabilities included in the evaluation board.

UBX-20030319 - R06
C1-Public

www.u-blox.com

sales@prom-elec.com / ООО ПРОМЭЛЕКТРОНИКА

Document information

Title	**EVK-NORA-B1**	
Subtitle	Evaluation kit for NORA-B1 series modules	
Document type	User guide	
Document number	UBX-20030319	
Revision and date	R06	24-Aug-2022
Disclosure restriction	C1-Public	

Product status	Corresponding content status	
In development / Prototype	Objective specification	Target values. Revised and supplementary data will be published later.
Engineering sample	Advance information	Data based on early testing. Revised and supplementary data will be published later.
Initial production	Early production information	Data from product verification. Revised and supplementary data may be published later.
Mass production/ End of life	Production information	Document contains the final product specification.

This document applies to the following products:

Product name	Document status
EVK-NORA-B100	Early production information
EVK-NORA-B106	Early production information
EVK-NORA-B120	Advance information
EVK-NORA-B126	Advance information

☞ For information about the hardware, software, and status of the available product types, see the NORA-B1 data sheet [1].

u- -blox or third parties may hold intellectual property rights in the products, names, logos and designs included in this document. Copying, reproduction, or modification of this document or any part thereof is only permitted with the express written permission of u-blox. Disclosure to third parties is permitted for clearly public documents only.
The information contained herein is provided “as is”. No warranty of any kind, either express or implied, is made in relation to the accuracy, reliability, fitness for a particular purpose or content of this document. This document may be revised by u-blox at any time. For most recent documents, please visit www.u-blox.com.
Copyright © u-blox AG.

Contents

Document information **2**
Contents **3**
1 Product description **4**
1.1 Key features 4
1.2 Items included in kit 5
1.2.1 EVK-NORA-B100 kit contents 5
1.2.2 EVK-NORA-B106 kit contents 5
1.2.3 EVK-NORA-B120 kit contents 5
1.2.4 EVK-NORA-B126 kit contents 5
1.3 Development tools 5
2 Hardware description **7**
2.1 Power 7
2.1.1 Low-voltage mode 7
2.1.2 High-voltage mode (EVK-NORA-B10 only) 8
2.2 Reset 9
2.3 Buttons 9
2.4 LEDs 10
2.5 Serial communication 11
2.6 32.768 kHz low frequency clock 12
2.7 NFC connector 13
2.8 Current sensing headers 14
2.9 Debug indicators 14
2.10 External SEGGER J-Link™ debug interface 15
2.11 QSPI 16
2.12 GPIO jumpers 16
2.13 Header pin-out 17
3 Application development **21**
3.1 Install Visual Studio Code 21
3.2 Install nRF Connect for Desktop 21
3.2.1 Install nRF Connect SDK 22
3.2.2 Visual Studio Code 22
3.2.3 Board support package 23
3.2.4 Create a new application 23
3.3 Test the application 27
Appendix **30**
A Glossary **30**
Related documentation **31**
Revision history **31**
Contact **31**

1 Product description

The EVK-NORA-B1 evaluation kit provides stand-alone use of the NORA-B1 series module featuring the Nordic Semiconductor nRF5340 dual-core RF System on Chip (SoC).

The evaluation kit provides a great starting point for almost any Bluetooth® 5.2 Low Energy (LE), Thread, or Zigbee project. All features of the NORA-B1 series modules are easily accessed from the evaluation board. A simple USB connection provides power, programming, and virtual COM ports. Four user buttons are available, as well as a USB peripheral connector, user LEDs, and a reset button. 48 GPIO (46 for EVK-NORA-B12) signals are available on headers that are compatible with the Arduino® form factor. This allows easy use of existing Arduino shields. Current sense resistors allow for measuring current into the module and into the shield.

This guide provides setup instructions for starting development and describes the hardware functionality of the EVK-NORA-B1 board.

1.1 Key features

- Used for evaluation of NORA-B1 modules
  - NORA-B100 or NORA-B101: EVK-NORA-B100
  - NORA-B106: EVK-NORA-B106
  - NORA-B120 or, NORA-B121: EVK-NORA-B120
  - NORA-B126: EVK-NORA-B126
- On-board programming and debug (SEGGER J-Link-OB)
- Able to program external modules
- Virtual COM ports over USB
- 48 GPIO (EVK-NORA-B10), 46 GPIO (EVK-NORA-B12)
- Buttons and LEDs for user interaction
- NFC antenna connector
- 32.768 kHz Crystal
- CR2032 coin cell battery holder
- USB peripheral connector
- Power input connectors
- Power mode selection switches (EVK-NORA-B10 only)
- PA/LNA support (EVK-NORA-B12 only)

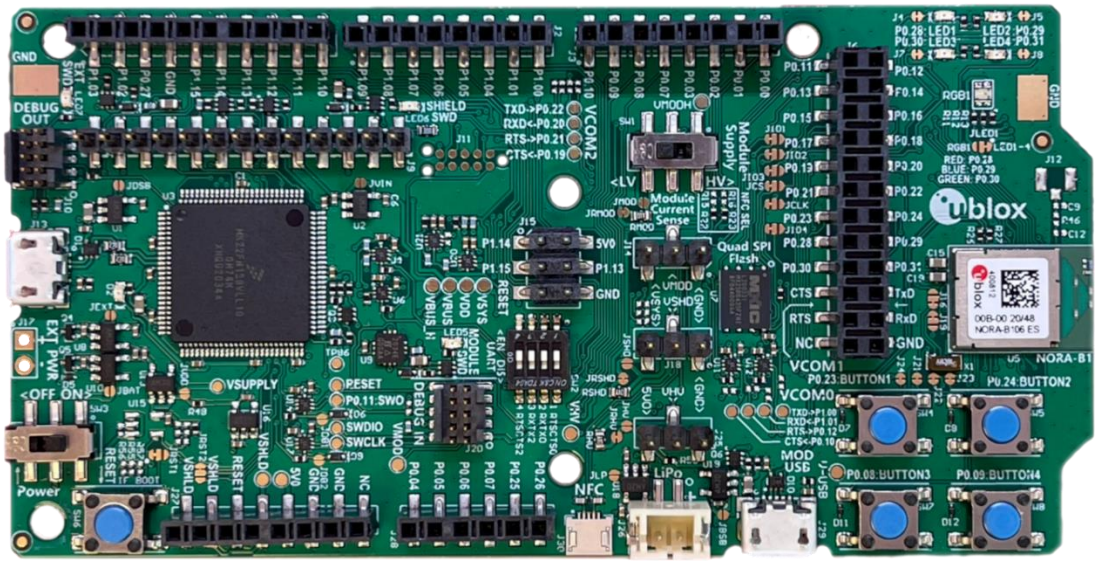

Figure 1: EVK-NORA-B1 evaluation board (top view)

1.2 Items included in kit

1.2.1 EVK-NORA-B100 kit contents

- EVK-NORA-B10 evaluation board with NORA-B100 module
- Micro-USB cable
- NFC antenna
- 2.4 GHz U.FL antenna kit
- 10-pin SWD programming cable, 2x5 headers on 1.27 mm centers

☞ For evaluation of the NORA-B101 module, select the EVK-NORA-B100 kit. Only the antenna connection point is different.

1.2.2 EVK-NORA-B106 kit contents

- EVK-NORA-B10 evaluation board with NORA-B106 module
- Micro-USB cable
- NFC antenna
- 2.4 GHz antenna integrated onto NORA-B106 module (no external antenna)
- 10-pin SWD programming cable, 2x5 headers on 1.27 mm centers

1.2.3 EVK-NORA-B120 kit contents

- EVK-NORA-B12 evaluation board with NORA-B120 module
- Micro-USB cable
- NFC antenna
- 2.4 GHz U.FL antenna kit
- 10-pin SWD programming cable, 2x5 headers on 1.27 mm centers

☞ For evaluation of the NORA-B121 module, select the EVK-NORA-B120 kit. Only the antenna connection point is different.

1.2.4 EVK-NORA-B126 kit contents

- EVK-NORA-B12 evaluation board with NORA-B126 module
- Micro-USB cable
- NFC antenna
- 2.4 GHz antenna integrated onto NORA-B126 module (no external antenna)
- 10-pin SWD programming cable, 2x5 headers on 1.27 mm centers

1.3 Development tools

The tools shown in Table 1 aid the development of NORA-B1 series Bluetooth modules.

Tool	Description
Nordic Semiconductor nRF Connect for Desktop	nRF Connect for Desktop is the primary development tool used with the NORA-B1 series modules. This tool includes an installation and maintenance utility for the nRF Connect SDK, Toolchain Manager. nRF Connect for Desktop is a cross-platform tool that also enables testing and development with Bluetooth LE. It allows easy setup of connections with other devices and uses these connections to read and write the external nodes. Available for Windows, macOS, and Linux.
Nordic Semiconductor Command Line Tools	The nRF Command Line Tools is used for development, programming and debugging of Nordic Semiconductor's nRF53 and other nRF series devices.
Microsoft Visual Studio Code (VS Code)	Visual Studio Code is a lightweight but powerful source code editor which runs on your desktop and is available for Windows, macOS and Linux.

Tool	Description
	Nordic Semiconductor's nRF Connect extension pack turns VS Code into a complete IDE for developing applications for NORA-B1 and other Nordic Semiconductor based u-blox modules. This includes an interface to the compiler and linker, an RTOS-aware debugger, a seamless interface to the nRF Connect SDK and a serial terminal among other useful tools. A DeviceTree viewer is also included. It visualizes the configured hardware and helps you easily navigate the DeviceTree source. Adding custom boards is made significantly simpler through the help of the Create New Board wizard.
Nordic Semiconductor nRF Connect SDK (NCS)	nRF Connect SDK contains several components, including the Zephyr RTOS, MCUboot, and nrfxlib peripheral libraries for the nRF5340 CPU within the NORA-B1 series modules. Installation of NCS is managed through nRF Connect for Desktop. Available for 32- and 64-bit Windows, macOS, and 64-bit Linux platforms. Nordic Command Line Tools are installed with NCS, including nrfjprog.
Nordic Semiconductor nRF Connect for Mobile (optional)	nRF Connect for Mobile is a powerful generic tool that allows you to scan and explore your Bluetooth LE devices and communicate with them. nRF Connect for Mobile supports several Bluetooth SIG adopted profiles, as well as the Device Firmware Update profile (DFU) from Nordic Semiconductor or Eddystone from Google. Available for iOS and Android. Installation is nRF Connect for Mobile is optional.
Nordic Semiconductor Mobile Apps (optional)	Additional, optional mobile utilities for application development. Available for iOS and Android.
SEGGER J-Link Software and Documentation Pack	J-Link Commander (JLink.exe) is a command line-based utility that can be used for verifying proper functionality of J-Link as well as for simple analysis of the target system. It supports some simple commands, such as memory dump, halt, step, and go, to verify the target connection. Available for Windows, macOS, and Linux platforms.

Table 1: Development tools

2 Hardware description

Design files in Altium, PDF, and Gerber formats for EVK-NORA-B1 PCBs may be requested from your local u-blox support team.

2.1 Power

EVK-NORA-B1 has six possible power sources, as described below:

Number	Source	Description	Minimum	Typical	Max
1	V5DEBUG	Power to debug interface USB port	3.8 VDC	5.0 VDC	5.5 VDC
2	VMODUSB	Power to NORA-B1 USB interface	3.8 VDC	5.0 VDC	5.5 VDC
3	Li-Po header	J26 battery connector	3.8 VDC		5.5 VDC
4	Arduino VIN	J27 or J9	3.8VDC		5.5 VDC
5	CR2032 battery	BAT1 coin cell holder	1.7 VDC	3.0 VDC	3.6 VDC
6	External connector	J17	1.7 VDC	3.3 VDC	3.6 VDC

Table 2: EVK power sources

Power sources 1 through 4 are connected through Maxim MAX40203AUK+T ideal protection diodes[1] to create **VBUS_H**, allowing selection of the highest input voltage.

VDD (3.3 VDC) is generated from **VBUS_H**. **VDD**, and power sources 5 and 6, are connected through ideal protection diodes to create **VBUS** from the highest voltage of these three sources.

☞ The debug interface and associated level shifters are only enabled when **V5DEBUG** is present. Otherwise, the debug interface is held in reset and level shifters disabled to conserve system power.

⚠ Normally open, solder jumpers are provided to allow by-passing any of the protection diodes. Care should be taken not to damage the supplies when the protection is disabled by soldering across any of these jumpers.

For details regarding measuring current, see Current sensing headers.

2.1.1 Low-voltage mode

☞ The HV mode switch, SW1, in the schematic is labeled “Module power” on the silk screen.

With the power switch in the ON position, and the HV mode switch in the LV (low-voltage) position, NORA-B1 is powered by **VMOD**. The following power signals are active:

- **VDD**, sourced by 3.3V LDO = debug interface power and reference voltage. Level shifters are used to allow independent NORA-B1 I/O voltage settings
- **VSYS**, sourced by **VBUS** = EVK system power
- **VSHLD**, sourced by **VSYS** = power source for shields connected through the Arduino header, J27 and J9
- **VMOD**, sourced by **VSYS** = NORA-B1 VDD module power input and I/O reference voltage
- **VMODH**, sourced by **VMOD** = NORA-B1 VDDH module power input (bypass NORA-B1 HV LDO)

⚠ Only if the power protection circuits are left intact can USB be safely connected at the same time as the coin cell or external power. This allows programming of the module while leaving other power sources connected.

[1] Maxim MAX40203AUK+T ideal protection diodes provide maximum forward voltage drop of 28 mV at 100 mA and prevent reverse current flow to other connected supplies.

2.1.2 High-voltage mode (EVK-NORA-B10 only)

☞ The HV mode switch, SW1, in the schematic is labeled “Module power” on the silk screen.

With the power switch in the ON position, and the HV mode switch in the HV (high-voltage) position, NORA-B10 is powered by **VMODH**. The following power signals are active:

- **VDD**, sourced by 3.3V LDO = debug interface power and reference voltage. Level shifters are used to allow independent NORA-B1 I/O voltage settings
- **VMOD**, sourced by NORA-B1 VDD = 1.8 VDC to 3.3 VDC supply output, configured by application software, and I/O voltage reference for NORA-B10.
- **VSYS**, sourced by **VMOD** = EVK system power
- **VSHLD**, sourced by **VSYS** = power source for shields connected through the Arduino header, J27 and J9
- **VHV**, sourced by **VBUS_H** = power from sources 1 through 4.
- **VMODH**, sourced by **VHV** = NORA-B10 VDDH module power input

☞ EVK-NORA-B12 does not support high voltage mode. The HV mode switch is not present.

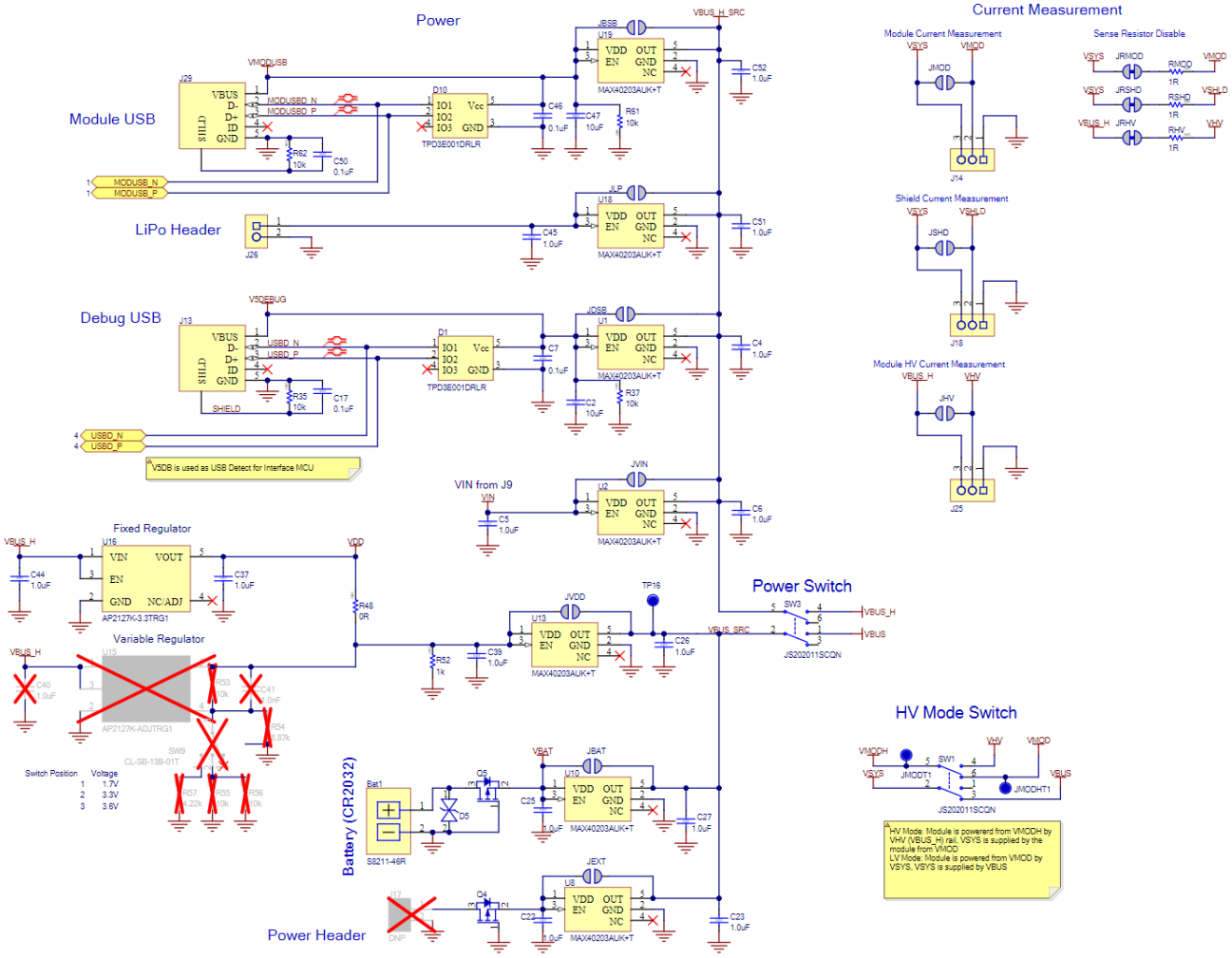

Figure 2: EVK schematic – power supply

2.2 Reset

The EVK-NORA-B1 provides a configurable hardware reset to the NORA-B1 module. The Reset button can be configured to connect to an input on the interface IC or to directly connect to **nRESET** signal in the module.

The reset button is connected to the debug interface chip by default. Pressing reset while the interface IC is powered causes a momentary reset signal on the **nMOD_RESET** output of the interface IC, which converted to the **VSYS** I/O voltage for the module. If the reset button is held down during the EVK power on, it causes the interface IC to enter its bootloader mode, which allows programming of the SEGGER J-Link interface.

Solder jumpers **JRST1** and **JRST2** allow the reset button to bypass the interface circuit and connect directly to the **nRESET** signal on the module.

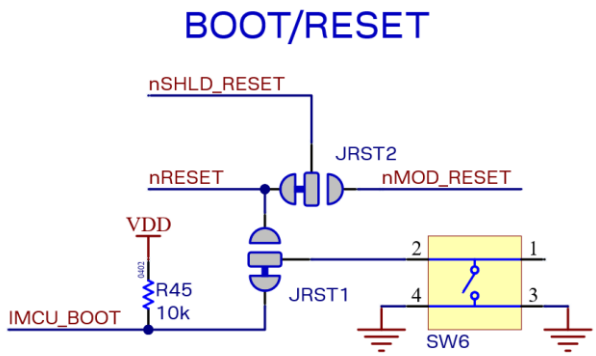

Figure 3: EVK schematic – reset

Signal name	Description
IMCU_BOOT	Input to interface chip. During normal operation, drive low to reset the NORA-B1. Drive low during power-up to enter bootloader mode on the interface chip.
nRESET	NORA-B1 reset signal at the NORA-B1 I/O voltage.
nMOD_RESET	NORA-B1 reset signal at the interface chip I/O voltage.
nSHLD_RESET	I/O header shield reset signal (J27, pin 3)

Table 3: EVK reset signals

2.3 Buttons

The evaluation board has four user buttons that are active low and connect to ground when pressed. Table 4 associates the button number and corresponding components.

Button	Switch	GPIO	Jumper	Protection diode
1	SW4	P0.23	J24	D7
2	SW5	P0.24	J21	D8
3	SW7	P0.08	J22	D11
4	SW8	P0.09	J23	D12

Table 4: User button components

The internal pull-up resistor of each NORA-B1 GPIO pin must be enabled for proper operation.

☞ Example programs in the SDK enable the pull-up resistors by default.

The buttons and ESD protection can be completely removed from the circuit by breaking the associated jumper.

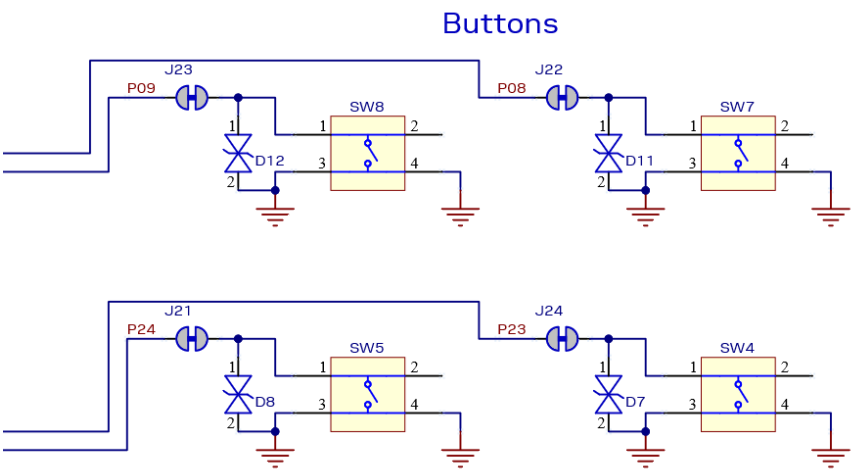

Figure 4: Schematic – user buttons

2.4 LEDs

User LEDs are provided on the evaluation board – two red and two green. An RGB LED is also included and this can be enabled by changing the position of JLED1.

LEDs are powered by **VIO** and are active low. The GPIO should be enabled for high drive when sinking current for the LEDs. The LEDs can be completely removed from the circuit by breaking the associated jumper.

LED	RGB LED	GPIO	Jumper	Comments
1 Red	Red	P0.28	J4	Change JLED1 for RGB
2 Red	Blue	P0.29	J5	Change JLED1 for RGB
3 Green	Green	P0.30	J7	Change JLED1 for RGB
4 Green		P0.31	J8	

Table 5: LED components

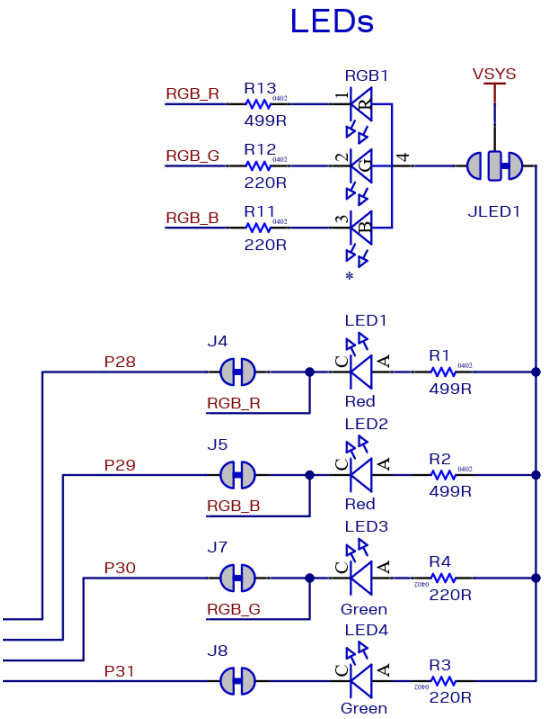

Figure 5: Schematic – user LEDs

2.5 Serial communication

The evaluation board allows for easy serial communication with the NORA-B1 module and a connected computer. The J-Link debug interface IC provides three virtual COM port (VCP) devices:

- The first (VCOM0) is used to obtain debug output and communicate with the network core.
- The second (VCOM1) is not normally used, although it is available through test points on the EVK.
- The third (VCOM2) is used to obtain debug output information and communicate with the application core.

VCOM Port functions connected to the NORA-B1 module can be disabled through SW2 to allow use of the GPIO pin for an application function.

Table 6 describes the function and test points for each module pin.

NORA-B1 pin name	NORA-B1 function	Test point / SW2 enable	Interface IC function
P1.01	Network core TXD	SW2 Position 2	RXD VCOM0
P1.00	Network core RXD	SW2 Position 2	TXD VCOM0
P0.11	Network core RTS	SW2 Position 1	CTS VCOM0
P0.10	Network core CTS	SW2 Position 1	RTS VCOM0
N/A	N/A	J6 Pin 22	RXD VCOM1
N/A	N/A	J6 Pin 20	TXD VCOM1
N/A	N/A	J6 Pin 19	CTS VCOM1
N/A	N/A	J6 Pin 21	RTS VCOM1
P0.20	Application core TXD	SW2 Position 3	RXD VCOM2
P0.22	Application core RXD	SW2 Position 3	TXD VCOM2
P0.19	Application core RTS	SW2 Position 4	CTS VCOM2
P0.21	Application core CTS	SW2 Position 4	RTS VCOM2

Table 6: Virtual COM port connections

☞ COM port assignments match the Nordic Semiconductor nRF53DK, v1.0.0 [6].

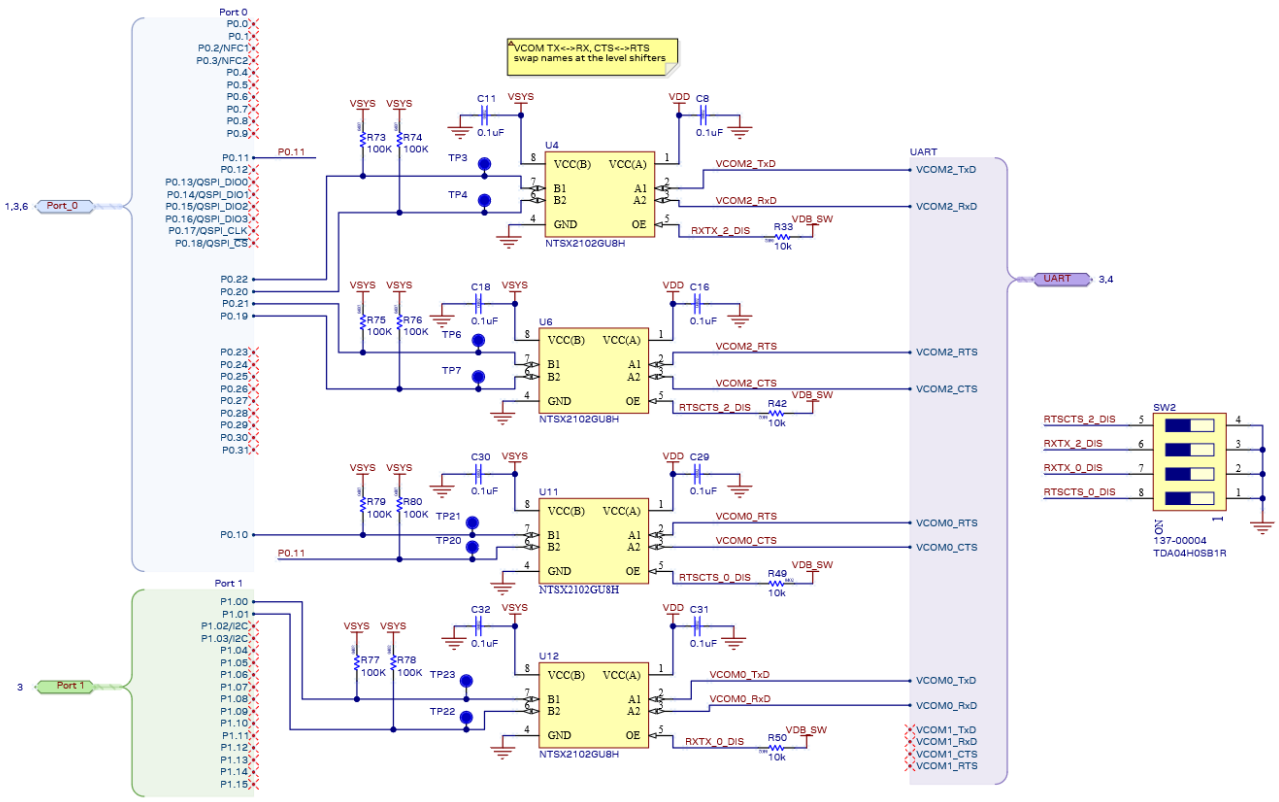

Figure 6: UART level shifters and disable switches

☞ Figure 6 reflects Rev D and Rev E hardware versions.

☞ For Rev C or earlier hardware versions, applications need to map the following **VCOM0** handshake signals:

- **VCOM0_RTS** = P0.12
- **VCOM0_CTS** = P0.10
- **VCOM0_TxD** = P1.00 (no change)
- **VCOM0_RxD** = P1.01 (no change)

2.6 32.768 kHz low frequency clock

The low frequency (LF) clock of the NORA-B1 module can have one of four sources:

- Internal ultra-low power RC oscillator – for low-precision timing where low power is the main requirement
- Internal calibrated RC oscillator – for applications with no strict real-time requirements
- Internal synthesized clock – derived from the 32 MHz clock
- External crystal oscillator – offers the most accurate and lowest power LF clock

The evaluation board has a 32.768 kHz crystal connected to the NORA-B1 module to allow use of the external crystal oscillator option. Loading capacitors for the oscillator circuit are internal to the nRF53 within the module. Values of 6 pF, 7 pF, and 11 pF can be enabled through register XOSC32KI.INTCAP.

If an internal LF clock source is used, the crystal can be removed from the circuit by opening jumpers J16 and J19. Soldering across the normally open position connects XL1 and XL2 to the EVK headers.

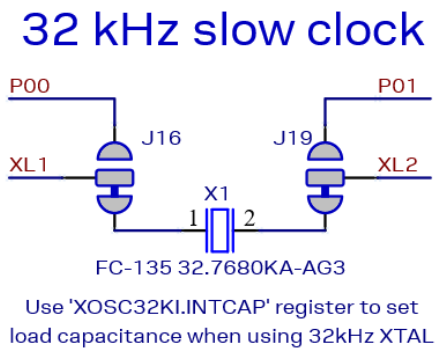

Figure 7: Schematic – 32 kHz crystal

2.7 NFC connector

Connection to an external NFC antenna is provided through a Molex flat-flex connector, part number 051281–0594. Capacitors C48 and C49 provide tuning of the NFC antenna for resonance at 13.56 MHz.

☞ The values of C48 and C49 are tuned for use with the supplied NFC antenna. These values might need to be changed if a different antenna is used. See also the nRF5340 product specification [4].

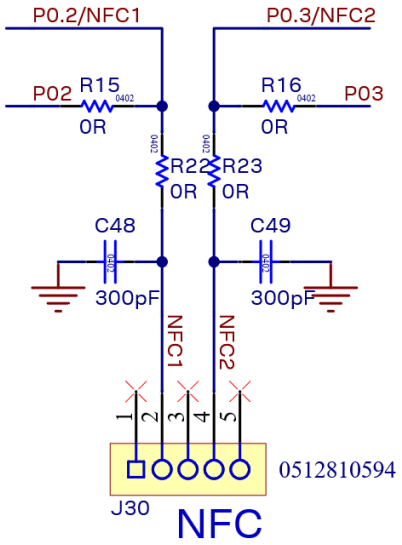

Figure 8: NFC connector

By default, the NORA-B1 module pins P0.02 and P0.03 are configured for NFC use. These pins can also be used for digital GPIO functions by modifying the population of R15, R16, R22, and R23 and the value of the NFCPINS UICR register.

Mode	Populate:	R15	R16	R22	R23	NFCPINS UICR register
NFC (default)				X	X	0xFFFFFFFF (enable protection, use as NFC)
GPIO[2,3]		X	X			0xFFFFFFFE (disable protection, use as GPIO)

Table 7: P0.02 and P0.03 pin configuration

[2] P0.02 and P0.03 have a pad capacitance of approximately TBD pF higher than other GPIO pins.
[3] When used as GPIO, P0.02 and P0.03 will exhibit approximately TBD µA leakage when driven to different states.

2.8 Current sensing headers

The evaluation board provides three current sensing headers:

- J14 allows for power consumption measurement of the NORA-B1 module.
- J25 allows for power consumption measurement of the high-voltage input.
- J18 allows for power consumption measurement of the shields connected to the Arduino-style headers (VSHLD power only).

Each 3-pin 2.54 mm pitch header has two pins connected across a 1 Ω current-sense resistor powering the module or the shield, and the third pin to ground. To measure current consumption, use a multimeter or other precision voltage measurement device to measure voltage drop across pins 2 and 3. Current can also be measured directly by opening **JRMOD**, **JRHV**, or **JRSHD** to remove the current-sense resistor from the circuit. Use an ammeter in series with the two voltage pins.

⚠ Pin 1 of J14, J18, and J25 is connected to GND.

Any current sense resistor can be bypassed by soldering the respective jumper: **JMOD**, **JSHD**, or **JHV**.

The default hardware configuration does not require any modification of the current sense headers for the EVK-NORA-B1 to perform properly.

☞ Only current flowing through **VMOD** into the module is measured; current sunk through GPIO pins is not measured.

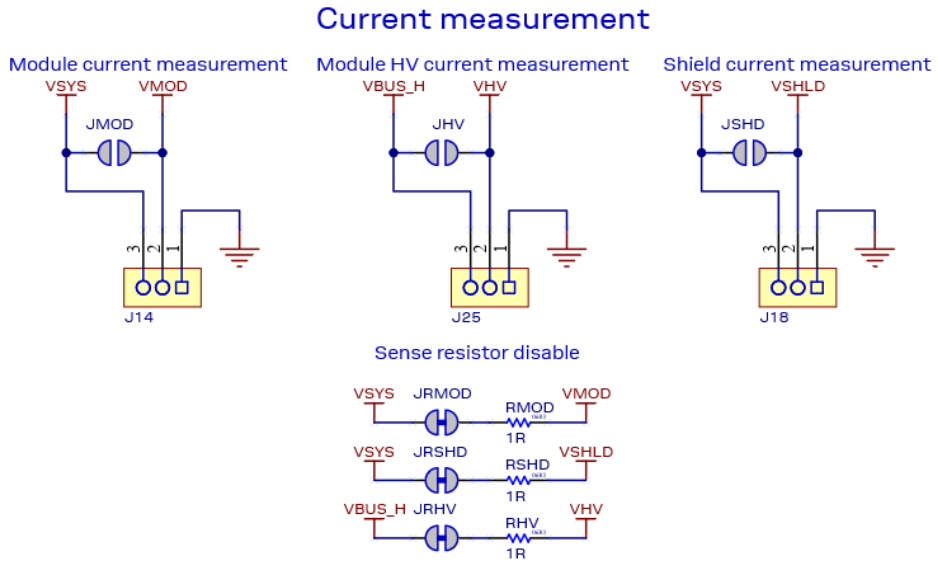

Figure 9: Current sensing header layout

☞ EVK-NORA-B12 does not have a high-voltage mode. JHV and JRHV are not present.

2.9 Debug indicators

Three LEDs indicate activity on the associated SWD interface, as shown in Table 8.

LED	Active SWD interface
LED5	On-board NORA-B1 Module
LED6	Shield connected to J9 – accommodates the Nordic Semiconductor Power Profiler Kit (PPK)
LED7	nRF5-based target device connected to J10. See also External SEGGER J-Link™ debug interface.

Table 8: Debug indicators

2.10 External SEGGER J-Link™ debug interface

External target hardware can be connected to J10 for firmware programming and debug. The SEGGER debug interface is implemented, as shown in Figure 10.

J3 is implemented with a 2x5, 10-pin header on 1.27 mm centers.

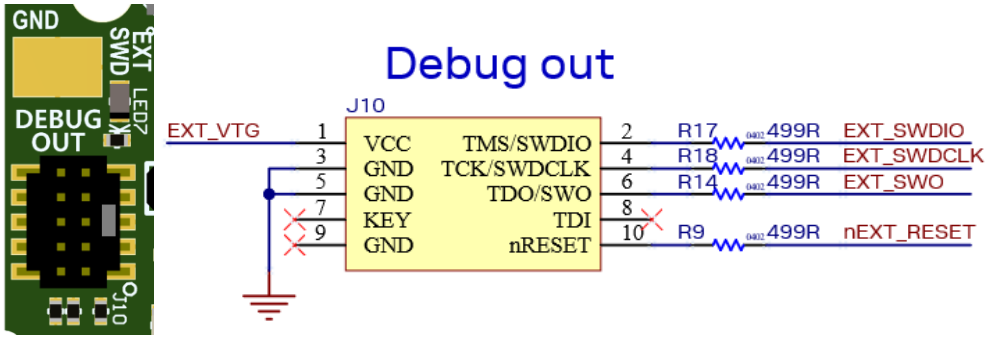

Figure 10: External J-Link debug interface

To enable the external J-Link connection, ensure the following are implemented on the target hardware:

- **EXT_VTG** is used by the debug interface as an input to sense power applied to the external circuit. Only voltages of 3.0 V to 3.3 V are supported. Target hardware operating voltages outside of this range require the use of an external SEGGER J-Link Debug Probe. Connect **EXT_VTG** to the NORA-B1 series power supply (**VDD**) on the target hardware.
- Connect **GND** to **GND** on the target hardware.
- Connect **EXT_SWDIO** to **SWDIO** and **EXT_SWCLK** to **SWDCLK** on the target NORA-B1 module.
- (Optional) Connect **EXT_SWO** and/or **nEXT_RESET** on the target NORA-B1 module.
- Connect external power to the target hardware, and then connect the EVK-NORA-B1 to USB.

☞ At this point, the debug interface interacts with the target hardware instead of the on-board NORA-B1 module. LED7 illuminates to indicate activity at the Debug Out connector.

☞ Only Nordic Semiconductor nRF5 devices are supported, including u-blox ANNA-B1, BMD-3, NINA-B1, NINA-B3, NINA-B4, and NORA-B1 series modules.

☞ EVK-NORA-B10 Rev C hardware cannot use the Debug Out connector to program another EVK-NORA-B10 Rev C EVK through its Debug In port. However, the Debug Out port can be used to program any other supported target hardware. Other programmers, like the J-Link Base, can be used to program EVK-NORA-B10 Rev C hardware through its Debug In port. EVK-NORA-B10 Rev D / Rev E and EVK-NORA-B12 hardware is not restricted.

2.11 QSPI

A 64 Mbit Quad SPI (MX25R6435F) flash is available on the EVK-NORA-B1. This memory can be used for execute-in-place (XIP) directly from the flash as well as from general data storage.

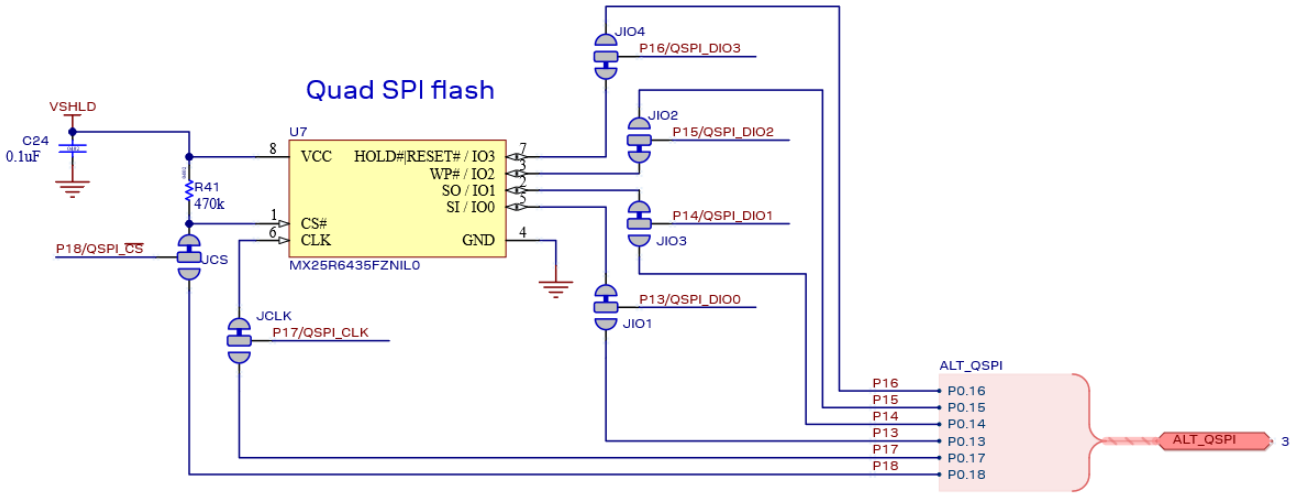

Figure 11: Quad SPI flash

2.12 GPIO jumpers

Several solder bridge jumpers on the board are available to configure the GPIO functions. Most solder jumpers are used to remove on-board components from the GPIO nets in the module and consequently eliminate interference with external circuitry added on the I/O headers.

All GPIOs are directly connected to the I/O Headers by default, except P0.00 and P0.01 (32 kHz crystal), P0.02 and P0.03 (NFC antenna), and P0.13 – P0.18 (QSPI). These are disconnected from the I/O headers as they would otherwise interfere with the default functions. The GPIO jumpers and associated functions are shown on the bottom of the EVK-NORA-B1 PCB.

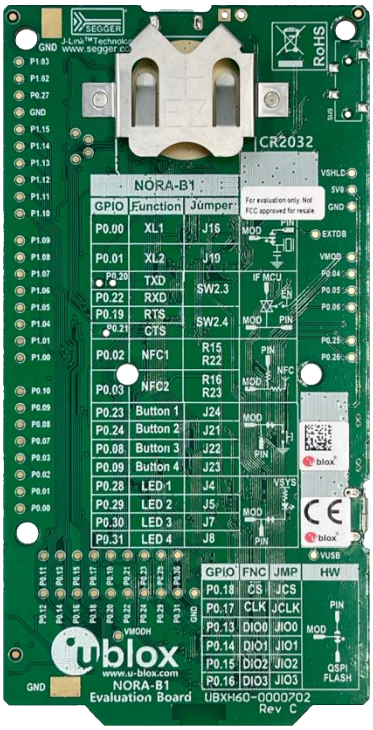

Figure 12: Legend for GPIO solder bridge jumpers

2.13 Header pin-out

Figure 13 shows the 2.54 mm pitch headers exposing the IO signals in the NORA-B1 module.

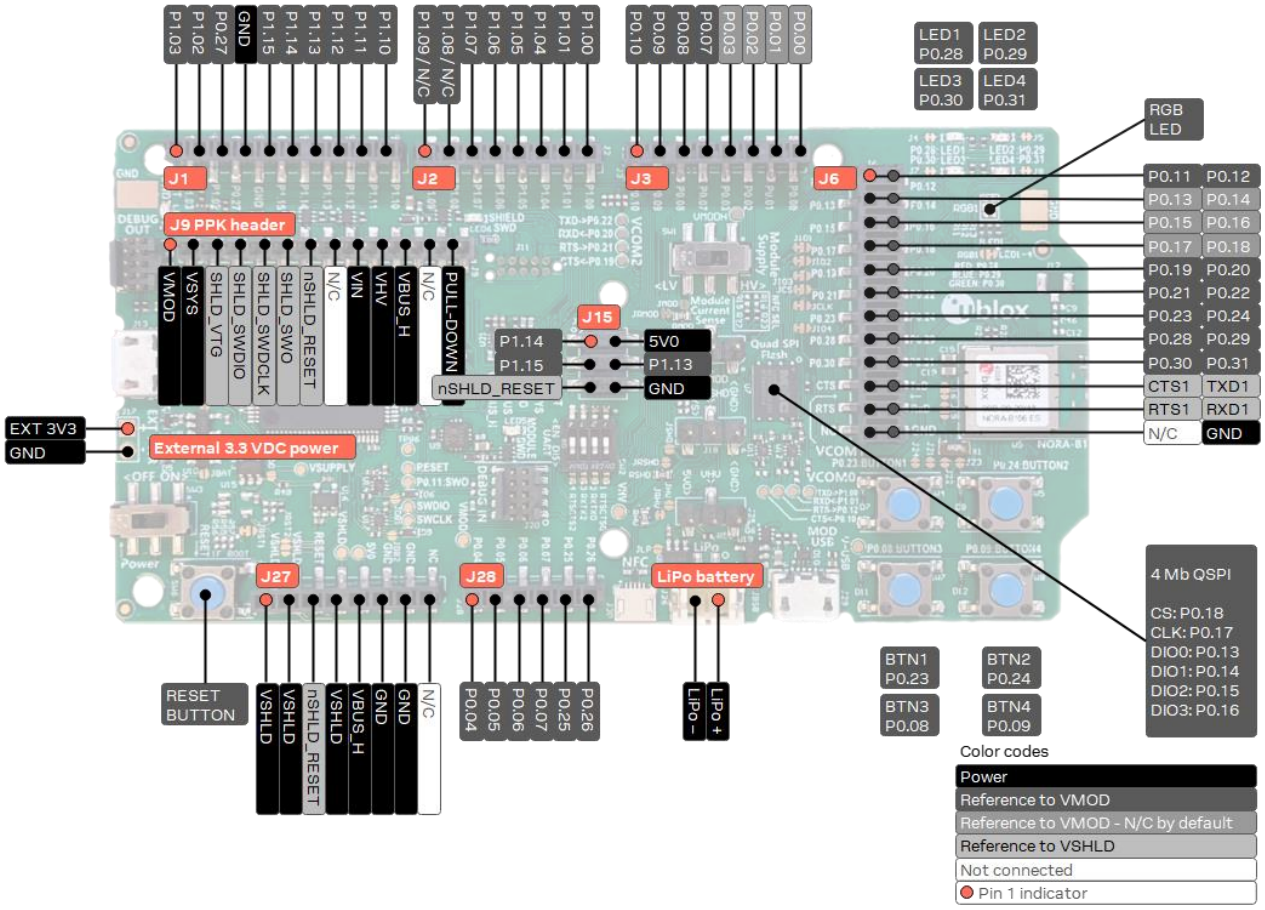

Figure 13: EVK-NORA-B1 I/O pin-out

☞ EVK-NORA-B12 uses **P1.08** as **TX_EN** and **P1.09** as **RX_EN** FEM control signals. They are available as test points near the NORA-B12 module on the PCB and N/C on J2.

⚠ The I/O pins of the EVK-NORA-B1 are not 5 V tolerant. Arduino Uno® style shields must be configured to use +3.3 V DC (**VSHLD**) as the I/O voltage reference.

Table 9 – Table 11 describe the pin assignments of each header.

Pin	Pin name	nRF5340	Function
1	P1.03	P1.03	GPIO/TWI
2	P1.02	P1.02	GPIO/TWI
3	P0.27	P0.27	GPIO/AIN6
4	GND	–	Ground
5	P1.15	P1.15	GPIO
6	P1.14	P1.14	GPIO
7	P1.13	P1.13	GPIO
8	P1.12	P1.12	GPIO
9	P1.11	P1.11	GPIO
10	P1.10	P1.10	GPIO

Table 9: Header J1

Pin	Pin name	nRF5340	Function
1 on EVK-NORA-B10 1 on EVK-NORA-B12	P1.09 N/C	P1.09 N/C	GPIO N/C
2 on EVK-NORA-B10 2 on EVK-NORA-B12	P1.08 N/C	P1.08 N/C	GPIO N/C
3	P1.07	P1.07	GPIO
4	P1.06	P1.06	GPIO
5	P1.05	P1.05	GPIO
6	P1.04	P1.04	GPIO
7	P1.01	P1.01	GPIO
8	P1.00	P1.00	GPIO

Table 10: Header J2

☞ EVK-NORA-B12 uses **P1.08** as **TX_EN** and **P1.09** as **RX_EN** FEM control signals. These signals are N/C on J2.

Pin	Pin name	nRF5340	Function
1	P0.10	P0.10	GPIO/TRACEDATA1/MISO
2	P0.09	P0.09	GPIO/TRACEDATA2/MOSI
3	P0.08	P0.08	GPIO/TRACEDATA3/SCK
4	P0.07	P0.07	GPIO/AIN3
5	P0.03	P0.03	OPEN/GPIO
6	P0.02	P0.02	OPEN/GPIO
7	P0.01	P0.01	OPEN/GPIO
8	P0.00	P0.00	OPEN/GPIO

Table 11: Header J3

Pin	Pin name	nRF5340	Function
1	P0.11	P0.11	GPIO/TRACEDATA0/CSN
2	P0.12	P0.12	GPIO//TRACECLK/DCX
3	P0.13	P0.13	OPEN/GPIO/QSPI DIO0
4	P0.14	P0.14	OPEN/GPIO/QSPI DIO1
5	P0.15	P0.15	OPEN/GPIO/QSPI DIO2
6	P0.16	P0.16	OPEN/GPIO/QSPI DIO3
7	P0.17	P0.17	OPEN/GPIO/QSPI CLK
8	P0.18	P0.18	OPEN/GPIO/QSPI CSN
9	P0.19	P0.19	GPIO
10	P0.20	P0.20	GPIO
11	P0.21	P0.21	GPIO
12	P0.22	P0.22	GPIO
13	P0.23	P0.23	GPIO
14	P0.24	P0.24	GPIO
15	P0.28	P0.28	GPIO/AIN7
16	P0.29	P0.29	GPIO
17	P0.30	P0.30	GPIO
18	P0.31	P0.31	GPIO
19	CTS1	P0.10 (after level shifter)	VCOM1 CTS
20	TXD1	P0.25 (after level shifter)	VCOM1 TXD
21	RTS1	P0.12 (after level shifter)	VCOM1 RTS
22	RXD1	P0.26 (after level shifter)	VCOM1 RXD
23	N/C	–	No connection
24	GND	–	GND

Table 12: Header J6

Pin	Pin name	nRF5340	Function
1	VMOD	–	Module VDD
2	VSYS	–	System 3.3 VDC
3	SHLD_VTG	–	Shield J-Link voltage sense
4	SHLD_SWDIO	–	Shield J-Link SWDIO
5	SHLD_SWDCLK	–	Shield J-Link SWDCLK
6	SHLD_SWO	–	Shield J-Link SWO
7	nSHLD_RESET	–	Shield J-Link nRESET
8	N/C	–	–
9	VIN	–	3.3V DC from shield
10	VHV	–	Module VDDH
11	VBUS_H	–	System 5.0 VDC
12	N/C	–	–
13	PULL_DOWN	–	Shield J-Link presence

Table 13: Header J9

Pin	Pin name	nRF5340	Function
1	P1.14	P1.14	GPIO
2	5V0	–	+5.0 V USB Power
3	P1.15	P1.15	GPIO
4	P1.13	P1.13	GPIO
5	RESET	nRESET	nRESET
6	GND	–	Ground

Table 14: Header J15

Pin	Pin name	nRF5340	Function
1	VSHLD	–	+3.3 V Shield Power
2	VSHLD	–	+3.3 V Shield Power
3	nSHLD_RESET	nRESET	nRESET
4	VSHLD	–	+3.3 V Shield Power
5	5V0	–	+5.0 V USB Power
6	GND	–	Ground
7	GND	–	Ground
8	-	–	No connection

Table 15: Header J27

Pin	Pin name	nRF5340	Function
1	P0.04	P0.04	GPIO/AIN0
2	P0.05	P0.05	GPIO/AIN1
3	P0.06	P0.06	GPIO/AIN2
4	P0.07	P0.07	GPIO/AIN3
5	P0.25	P0.25	GPIO/AIN4
6	P0.26	P0.26	GPIO/AIN5

Table 16: Header J28

3 Application development

Developing application code for the EVK-NORA-B1 requires an Internet connection and installation of certain tools – primarily Microsoft Visual Studio Code (VS Code) [15] and nRF Connect for Desktop [11]. nRF Connect for Desktop is used to manage the nRF Connect SDK installation as well as provide additional utilities.

Application code is edited, compiled, and programmed through VS Code. See also the Nordic documentation for nRF Connect SDK [5] [6].

The NORA-B1 module utilizes the Nordic Semiconductor nRF5340 CPU. This processor consists of two ARM Cortex-M33 processors, denoted as the application core and network core. The application core is responsible for allocating shared resources. If the end-product code only uses the network core, both application and network cores must be programmed for the resource allocation to be valid.

The Nordic Semiconductor Bluetooth peripheral example discussed here uses both cores. The network core is loaded with the Bluetooth controller to provide an HCI interface to the application core. The application is loaded with code to operate the GPIO to provide the Nordic-defined LED and button service (LBS).

☞ EVK-NORA-B1 is pre-loaded with the `.\nrf\samples\bluetooth\peripheral_lbs` example at the factory. To check to the operation, see also Test the application.

3.1 Install Visual Studio Code

NCS uses Visual Studio Code (VS Code) as the development IDE. Download and install Microsoft Visual Studio Code [15].

3.2 Install nRF Connect for Desktop

nRF Connect for Desktop [11], hereafter referred to as nRF Connect, manages several development utilities provided by Nordic Semiconductor. nRF Connect is available for Windows, macOS, and Linux.

Install the Toolchain Manager (Windows) or Getting Started Assistant (macOS and Linux).

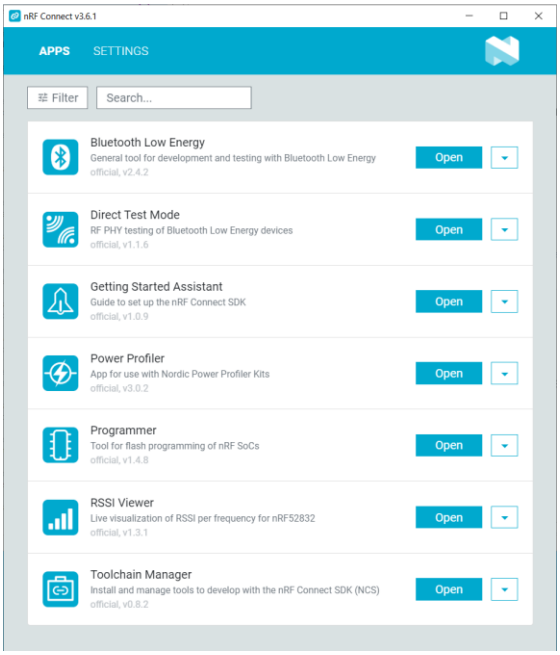

Figure 14: nRF Connect main window

The Bluetooth Low Energy, Direct Test Mode, Power Profiler, Programmer and RSSI Viewer utilities provided through nRF Connect are optional, though they are useful for application development.

3.2.1 Install nRF Connect SDK

Installation of the nRF Connect SDK on Windows uses the Toolchain Manager [7] utility.

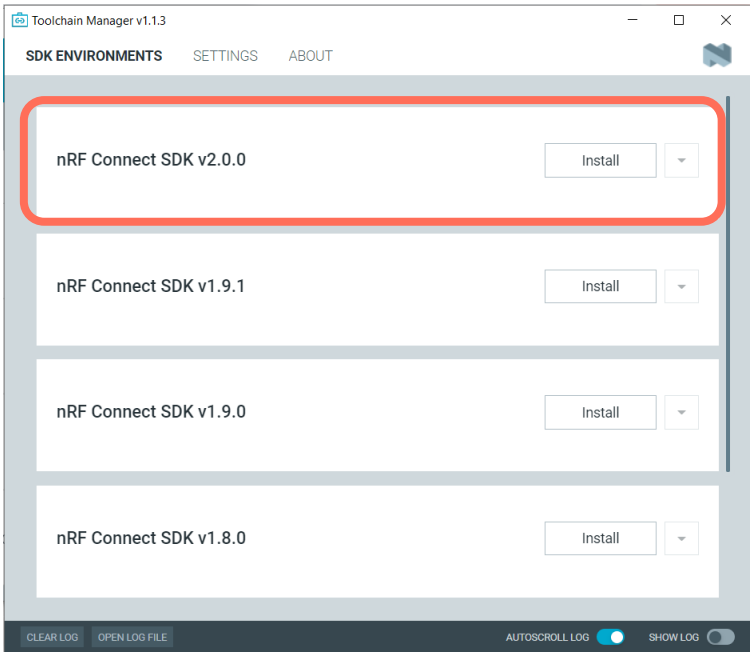

Figure 15: SDK version selection

☞ Figure 16 shows the state of the nRF Connect SDK versions at the time of publication. Select the newest stable release.

3.2.2 Visual Studio Code

After installation of VS Code, open it through the nRF Connect for Desktop Toolchain Manager utility.

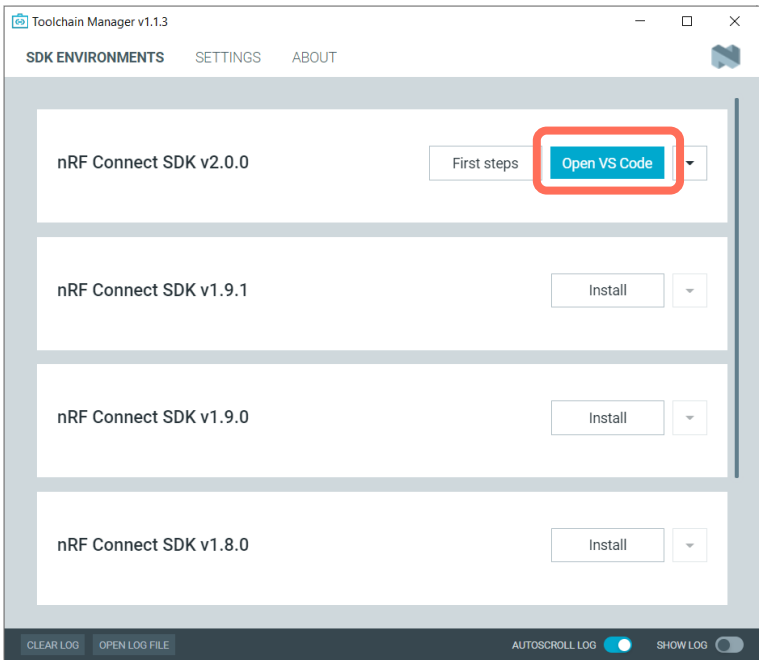

Figure 16: Toolchain manager / Visual Studio Code link

The Toolchain Manager will check the VS Code installation for several extensions provided by Nordic Semiconductor. If they are not present the user is prompted to install them. If prompted, accept the installation.

Once VS Code starts, a NCS welcome screen is displayed.

3.2.3 Board support package

EVK-NORA-B1 requires a unique board support package (BSP) to account for the GPIO assignments within the design. u-blox board support files have the format **ubx_<board_name>_<cpu>**.

The EVK-NORA-B10 BSP uses the name **ubx_evknorab10_nrf5340**, which is appended with the suffix **_cpunet**, **_cpuapp**, or **_cpuappns,** to reflect the target core.

The EVK-NORA-B12 BSP uses the name **ubx_evknorab12_nrf5340**, which is appended with the suffix **_cpunet**, **_cpuapp**, or **_cpuappns,** to reflect the target core.

All core options are contained in a single BSP folder. u-blox has submitted an application to include the EVK-NORA-B1 BSPs into the mainline Zephyr RTOS distribution. In the interim, the package is already available for download from the u-blox GitHub repository [3].

Copy the entire `.\zephyr\boards\arm\ubx_evknorab10_nrf5340` folder into the NCS directory `.\ncs\vX.Y.Z\zephyr\boards\arm`, where "`X.Y.Z`" is the NCS version in use.

☞ The BSPs are compatible with NCS v2.0.0 and newer.

3.2.4 Create a new application

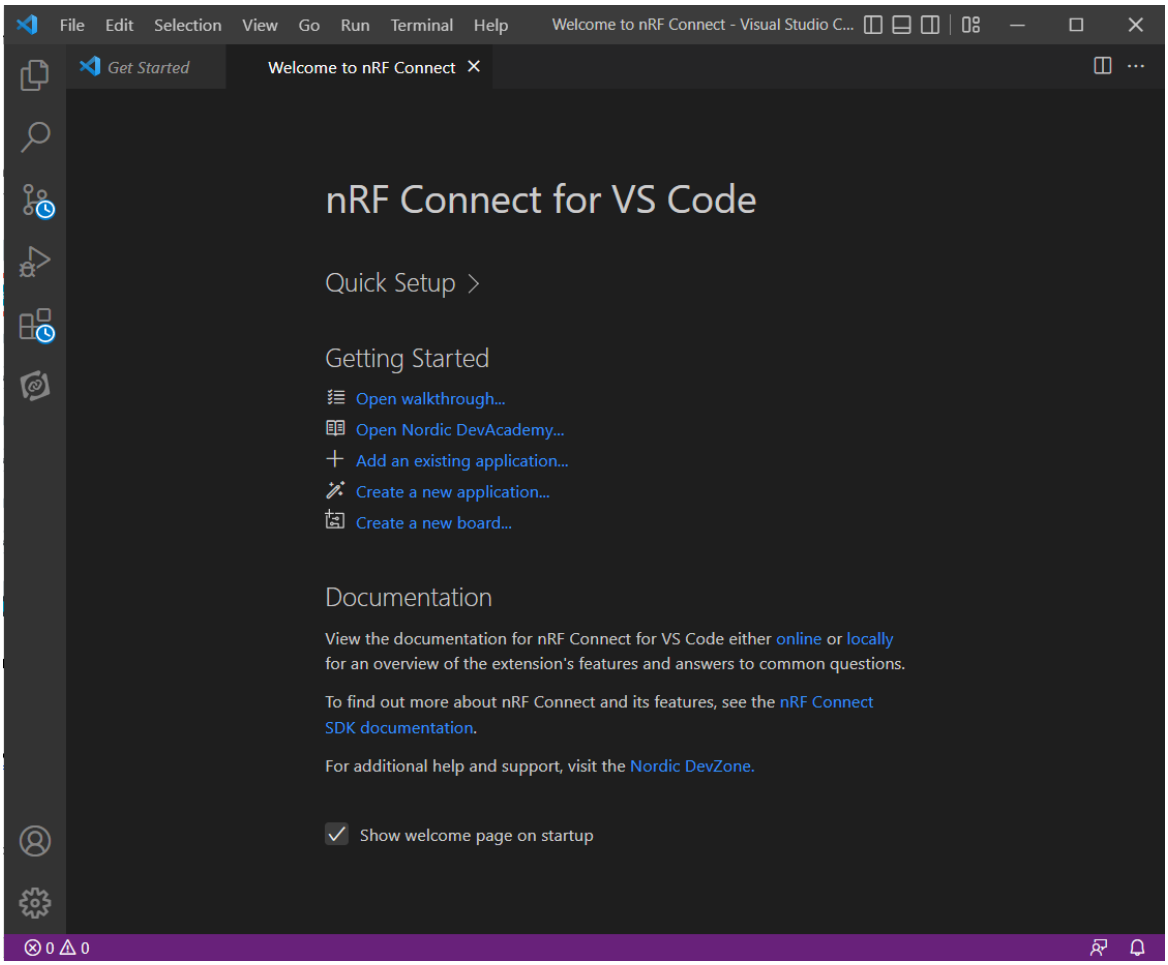

Figure 17: nRF Connect for VS Code welcome page

1. Select the “Create a new application” option.

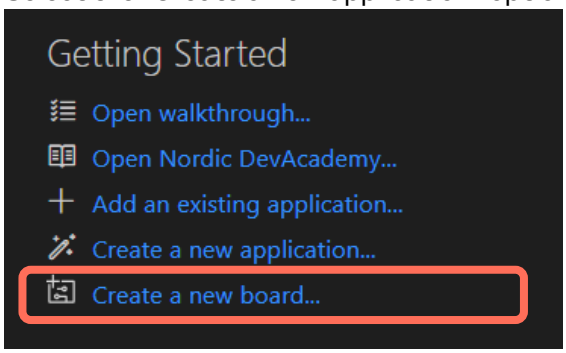

Figure 18: Create a new application

2. At the next screen, confirm the correct SDK version and Toolchain. At “application location”, select a local working directory. At “application template”, select “nrf/samples/Bluetooth/peripheral_lbs” from the displayed list.

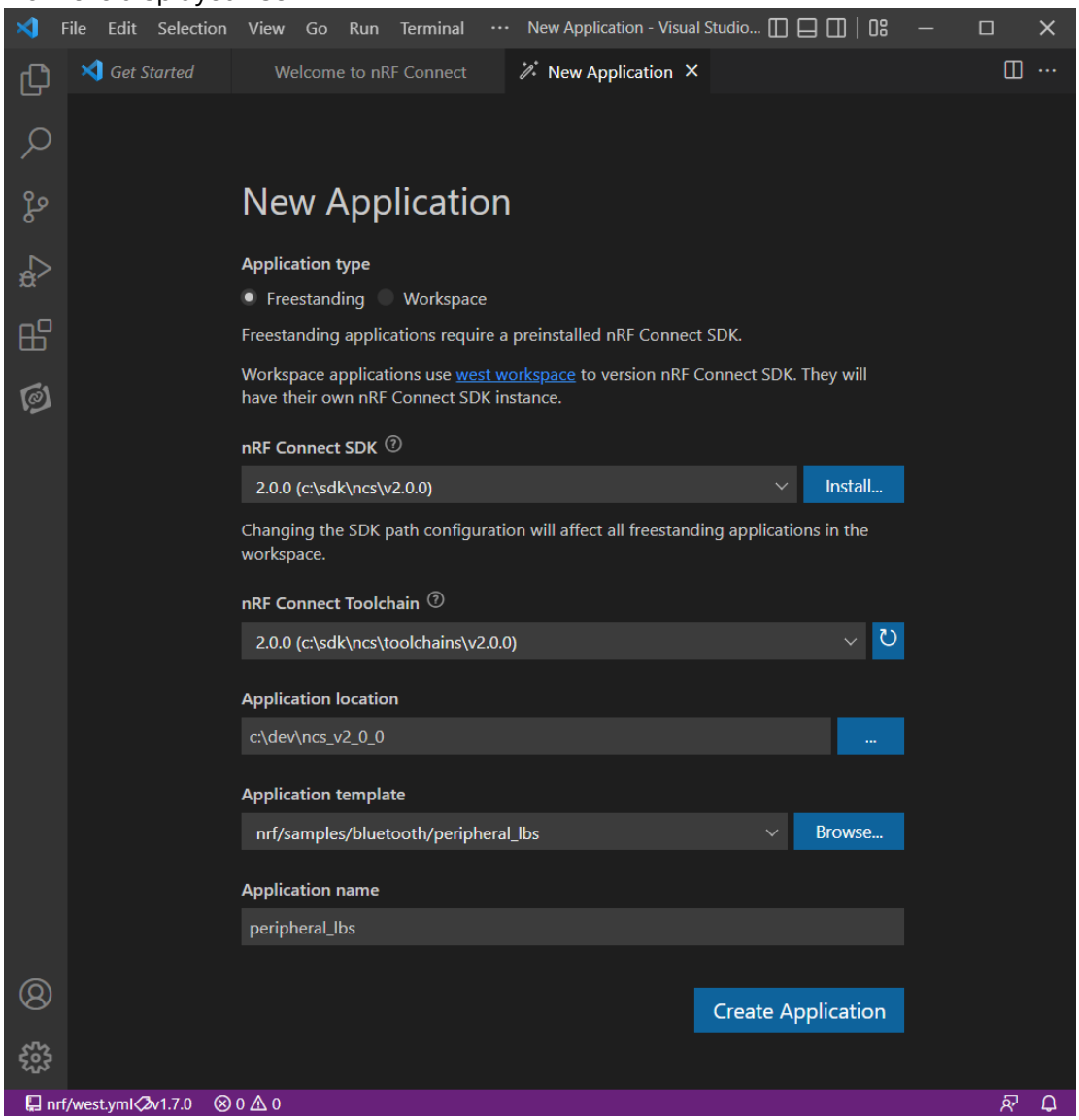

Figure 19: New application configuration

3. After all items are confirmed, click on Create Application. The NCS extensions will configure the application.

4. Open the NRF Connect panel by clicking on the icon in the left column.

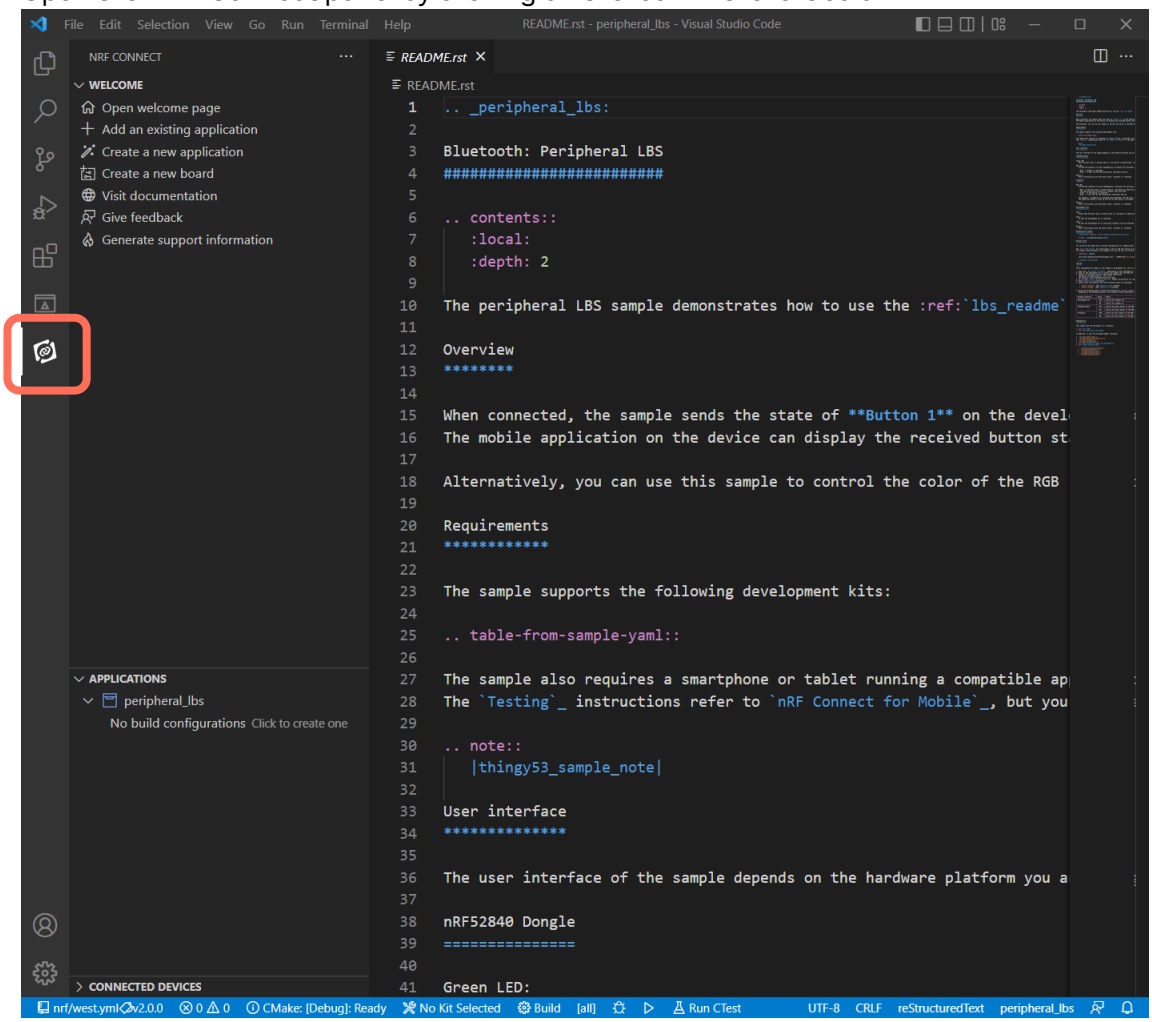

Figure 20: nRF Connect for VS Code sidebar

5. Under “Applications / peripheral_lbs”, click the link to create a build configuration.

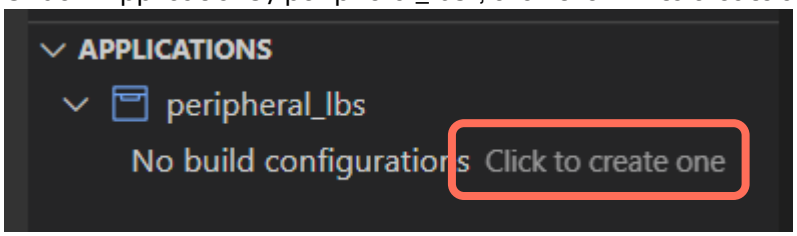

Figure 21: Create build configuration

6. At the next screen, select the board “ubx_evknorab10_nrf5340_cpuapp” or “ubx_evknorab12_nrf5340_cpuapp”, depending on which board is in use, and optionally enable debug options. Click on Build Configuration.

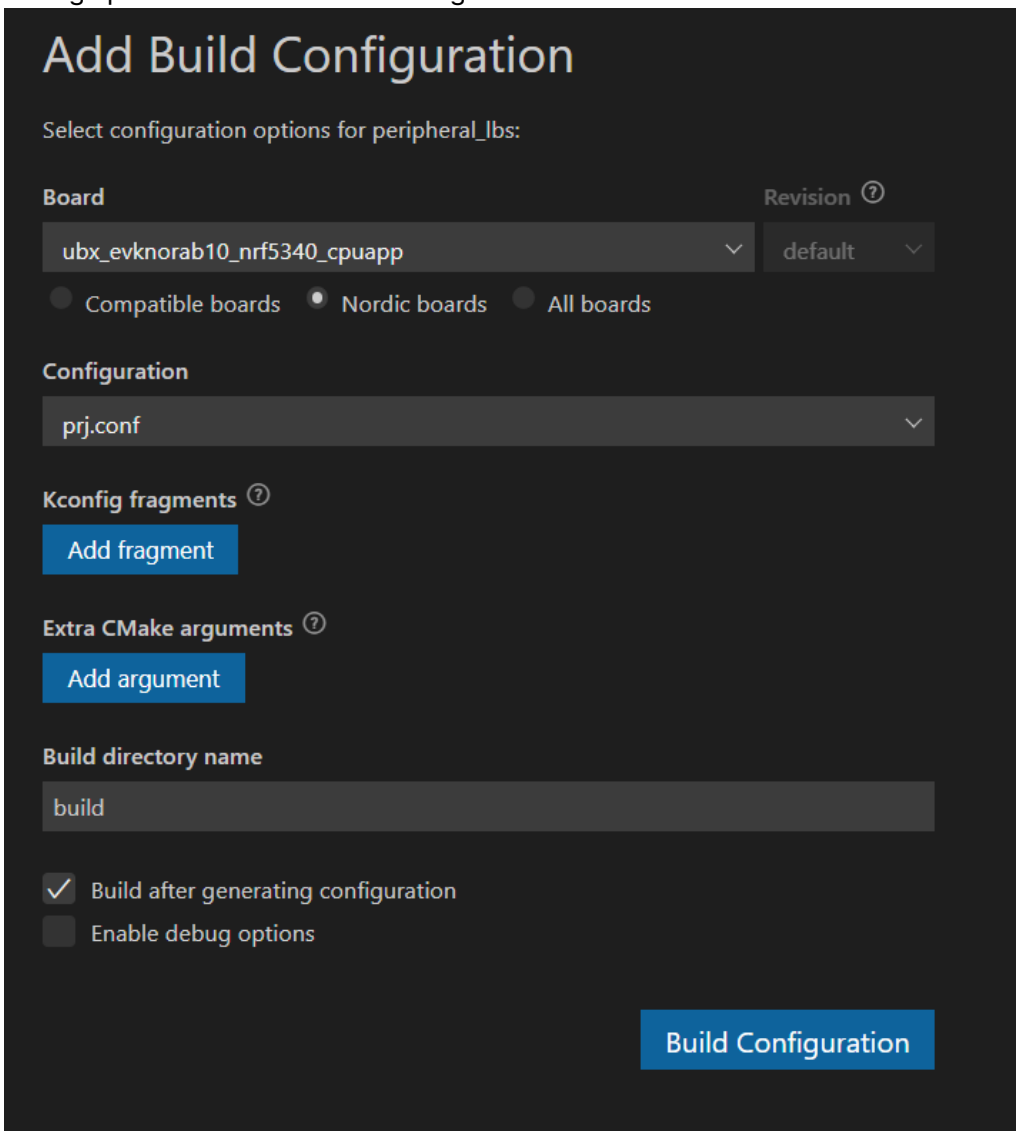

Figure 22: Build configuration - select board

The application will be configured and compiled, ready to flash onto the EVK.

Under the "Connected devices” tree, ensure the EVK is listed. The serial number of the J-Link-OB interface will be different for each EVK.

7. In the “Actions” section, click “Flash”.

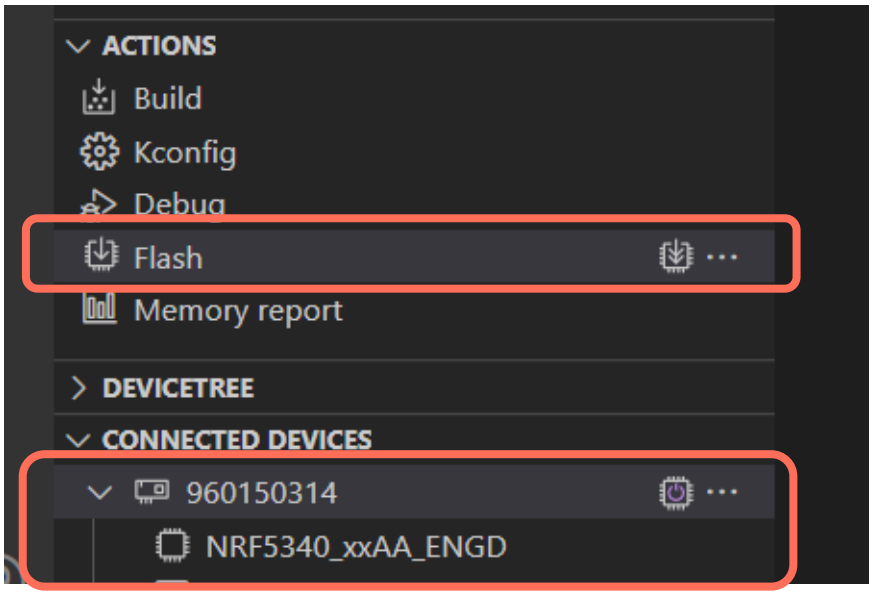

Figure 23: J-Link connection and board flashing

At this point, the **peripheral_lbs** sample is running. LED1 blinks at 1 second intervals to indicate that the module is advertising with the name **Nordic_LBS**.

☞ The public device address stored in the OTP[0..1] registers of the NORA-B1 application core UICR and CUSTOMER[0..1] of the NORA-B1 network core UICR are erased when the nRF53 is programmed over the SWD port. The address can be restored by reading the 2D data matrix on the module label. See also the NORA-B1 data sheet [1] for the data matrix details.

☞ The example programs provided with the SDK use a permanent static random address stored in the FICR. The u-blox supplied public device address is not used by default.

3.3 Test the application

Having loaded the network and application builds to the NORA-B1 module, follow the procedure outlined below to test the application.

1. Observe LED1 flashing. This indicates that the NORA-B1 is advertising for a connection.
2. Install and open the nRF Connect for Mobile app on your mobile device.
3. Start a scan and look for the **Nordic_LBS** or **Nordic_Blinky** device.

☞ The application loaded at the factory has the same functionality as the sample **Nordic_LBS** application, except it uses the advertising name **Nordic_Blinky**.

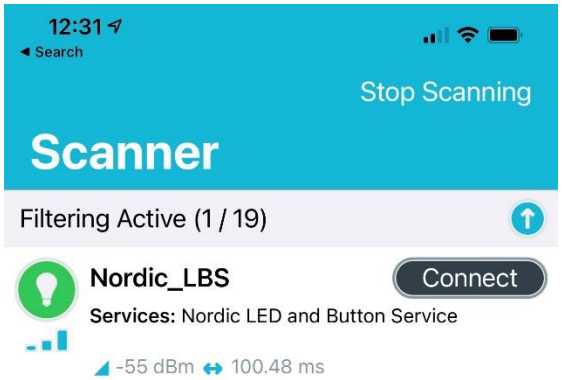

Figure 24: nRF Connect scanning on iOS

4. Connect to **Nordic_Blinky** or **Nordic_LBS**; notice EVK LED 2 turn on solid.
5. On the mobile app, swipe left to show the Services dialog.

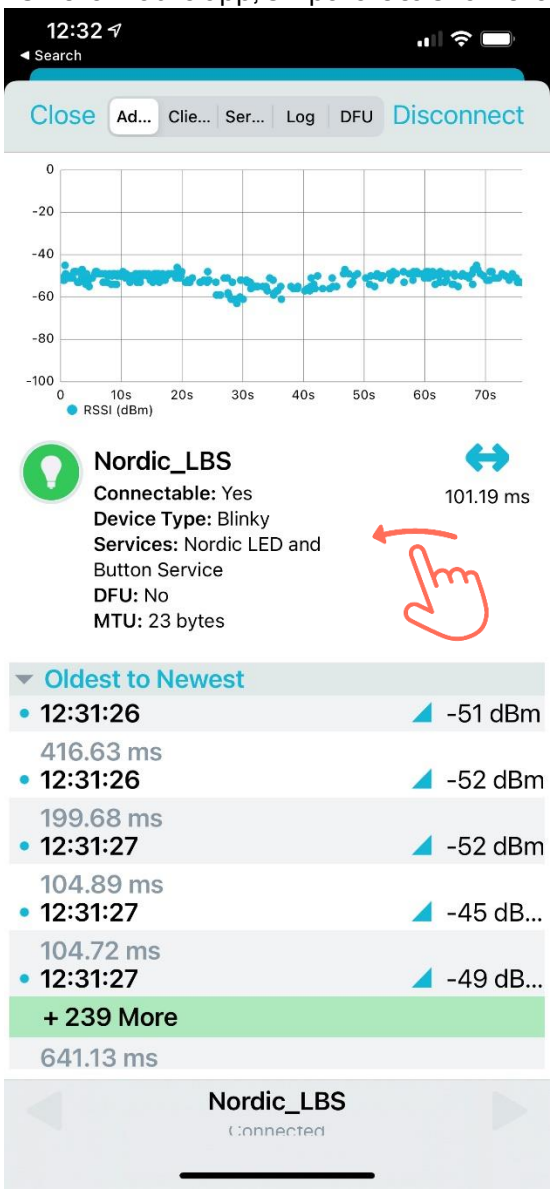

Figure 25: nRF Connect connection information dialog

6. In the Button State service, tap the triple-down-arrow icon to enable Bluetooth LE notifications. The color of the icon changes, as shown Figure 26.

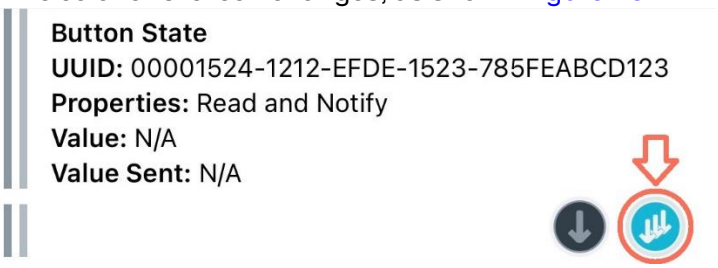

Figure 26: Enable notifications for button presses

7. Press and hold button 1 on the EVK; observe the value change. Release and observe the change again.

8. In the LED State service, tap the up-arrow icon to display the **Write Value** dialog.

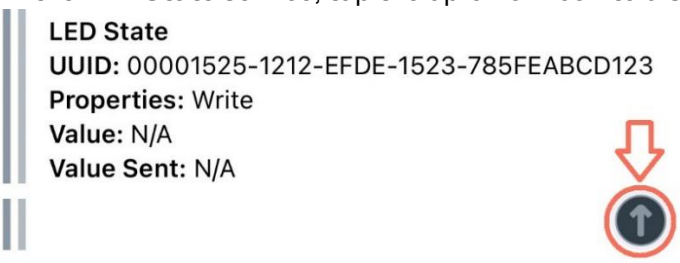

Figure 27: Write to LED State service

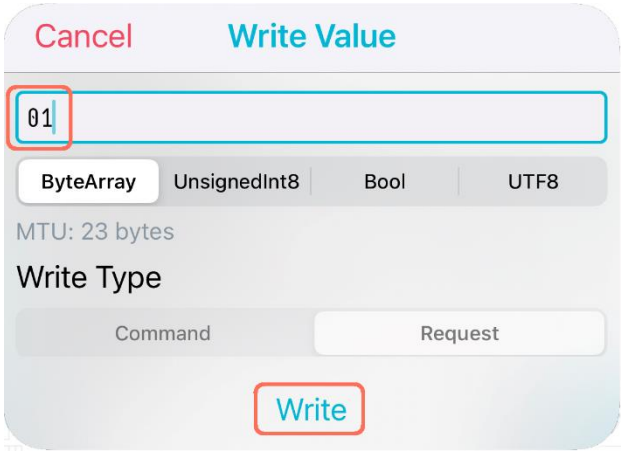

Figure 28: Write value to change EVK LED

9. Try different one-byte values. A value of `0x00` turns off LED 3. Any other value turns it on.

☞ The mobile application **nRF Blinky** may also be used to confirm operation of the code.

Appendix

A Glossary

Abbreviation	Definition
ARM	Arm (Advanced RISC Machines) Holdings
CPU	Central Processing Unit
CTS	Clear To Send
DC	Direct Current
DC-DC	DC to DC converter
DFU	Device Firmware Update
EVK	Evaluation Kit
FICR	Factory Information Configuration Register
GPIO	General Purpose Input / Output
LDO	Low Drop-Out voltage regulator
LE	Low Energy
LED	Light Emitting Diode
LF	Low Frequency
LiPo	Lithium-Polymer battery
NCS	nRF Connect SDK
NFC	Near-Field Communications
QSPI	Quad Serial Peripheral Interface
RC	Resistor-Capacitor network
RTS	Request To Send
RXD	Receive data signal
SIG	Special Interest Group
SoC	System on Chip
SPI	Serial Peripheral Interface
TXD	Transmit data signal
UICR	User Information Configuration Register
USB	Universal Serial Bus

Table 17: Explanation of the abbreviations and terms used

Related documentation

[1] NORA-B1 data sheet, UBX-20027119
[2] NORA-B1 system integration manual, UBX-20027617
[3] u-blox GitHub repository u-blox-sho-OpenCPU
[4] Nordic Semiconductor nRF5340 product specification
[5] Nordic Semiconductor nRF Connect SDK documentation
[6] Nordic Semiconductor nRF Connect SDK working with nRF53 series
[7] Nordic Semiconductor Toolchain Manager
[8] Nordic Semiconductor Getting Started Assistant
[9] SEGGER J-Link Software and Documentation Pack
[10] Nordic Semiconductor nRF Command Line Tools
[11] Nordic Semiconductor nRF Connect for Desktop
[12] Nordic Semiconductor nRF Connect for Mobile
[13] Nordic Semiconductor mobile apps
[14] Nordic Semiconductor GitHub site
[15] Microsoft Visual Studio Code
[16] Zephyr project West

For product change notifications and regular updates of u-blox documentation, register on our website, www.u-blox.com.

Revision history

Revision	Date	Name	Comments
R01	02-Oct-2020	brec	Initial release
R02	13-Oct-2020	brec	Included editorial improvements in all sections, and revised Document information to confirm document status
R03	21-Jan-2021	brec	Updated hardware description and colors to match rev C hardware, updated section 4 to correspond to nRF Connect SDK updates
R04	14-May-2021	brec	Updated nRF Connect version references to v1.5.0, added table for LED components
R05	03-Sep-2021	brec	Updated board selection to use ubx_evknorab10_nrf5340, updated images to nRF Connect SDK v1.6.1
R06	24-Aug-2022	brec	Added EVK-NORA-B12 information throughout, removed SEGGER Embedded Studio references, added Microsoft VS Code references, included additional information in section Power, corrected reset signals on Figure 13, corrected reset in Table 15. Updated disclaimer and contact information.

Contact

For further support and contact information, visit us at www.u-blox.com/support.