W6100-EVB-Pico

Overview

W6100-EVB-Pico is a microcontroller evaluation board based on the Raspberry Pi RP2040 and fully hardwired TCP/IP controller W6100 – and basically works the same as Raspberry Pi Pico board but with additional Ethernet via W6100.

- Raspberry Pi Pico Clone
- Ethernet (W6100 Hardwired TCP/IP CHIP)

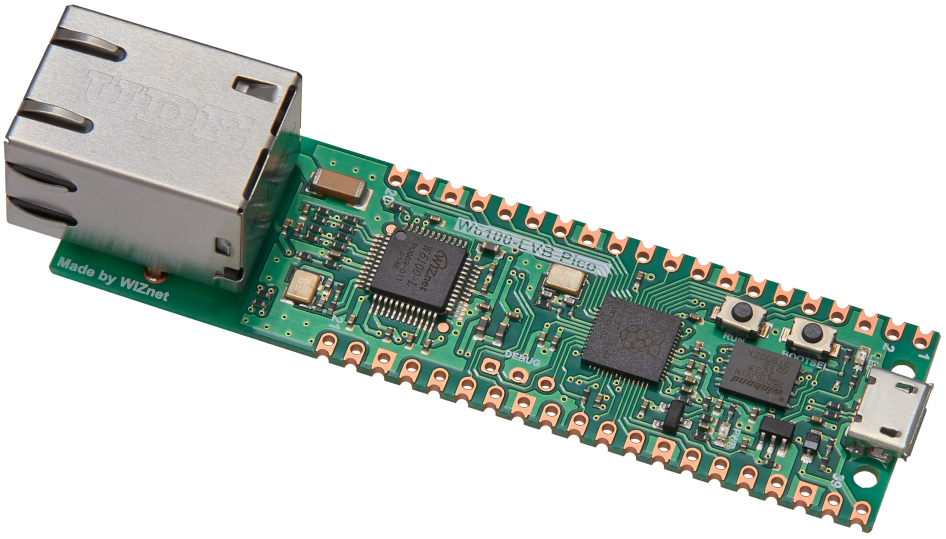

Revision history

Date	Version	Description
Oct 2022	1.0	Initial board release

Features

- RP2040 microcontroller with 2MByte Flash
  - Dual-core cortex M0+ at up to 133MHz
  - 264kByte multi-bank high performance SRAM
  - External Quad-SPI Flash with eXecute In Place (XIP)
  - High performance full-crossbar bus fabric
  - 30 multi-function General Purpose IO (4 can be used for ADC)
    - 1.8-3.3V IO Voltage (NOTE. Pico IO voltage is fixed at 3.3V)
  - 12-bit 500ksps Analogue to Digital Converter (ADC)

- Various digital peripherals
  - 2 × UART, 2 × I2C, 2 × SPI, 16 × PWM channels
    - 1 × Timer with 4 alarms, 1 × Real Time Counter
  - 2 × Programmable IO (PIO) blocks, 8 state machines total
  - Flexible, user-programmable high-speed IO
  - Can emulate interfaces such as SD Card and VGA
- Includes W6100
  - Supports Hardwired Internet Protocols: TCP, UDP, IPv6, IPv4, ICMPv6, ICMPv4, IGMP, MLDv1, ARP, PPPoE
  - Supports 8 independent SOCKETs simultaneously with 32KB memory
  - Internal 16 Kbytes Memory for TX/ RX Buffers
  - SPI Interface
- Micro-USB B port for power and data (and for reprogramming the Flash)
- 40 pin 21x51 'DIP' style 1mm thick PCB with 0.1" through-hole pins also with edge castellations
- 3-pin ARM Serial Wire Debug (SWD) port
- 10 / 100 Ethernet PHY embedded
- Supports Auto Negotiation
  - Full / Half Duplex
  - 10 / 100 Based
- Built-in RJ45(RB1-125BAG1A)
- Built-in LDO (LM8805SF5-33V)

Hardware Specification

Pin-out v1.0

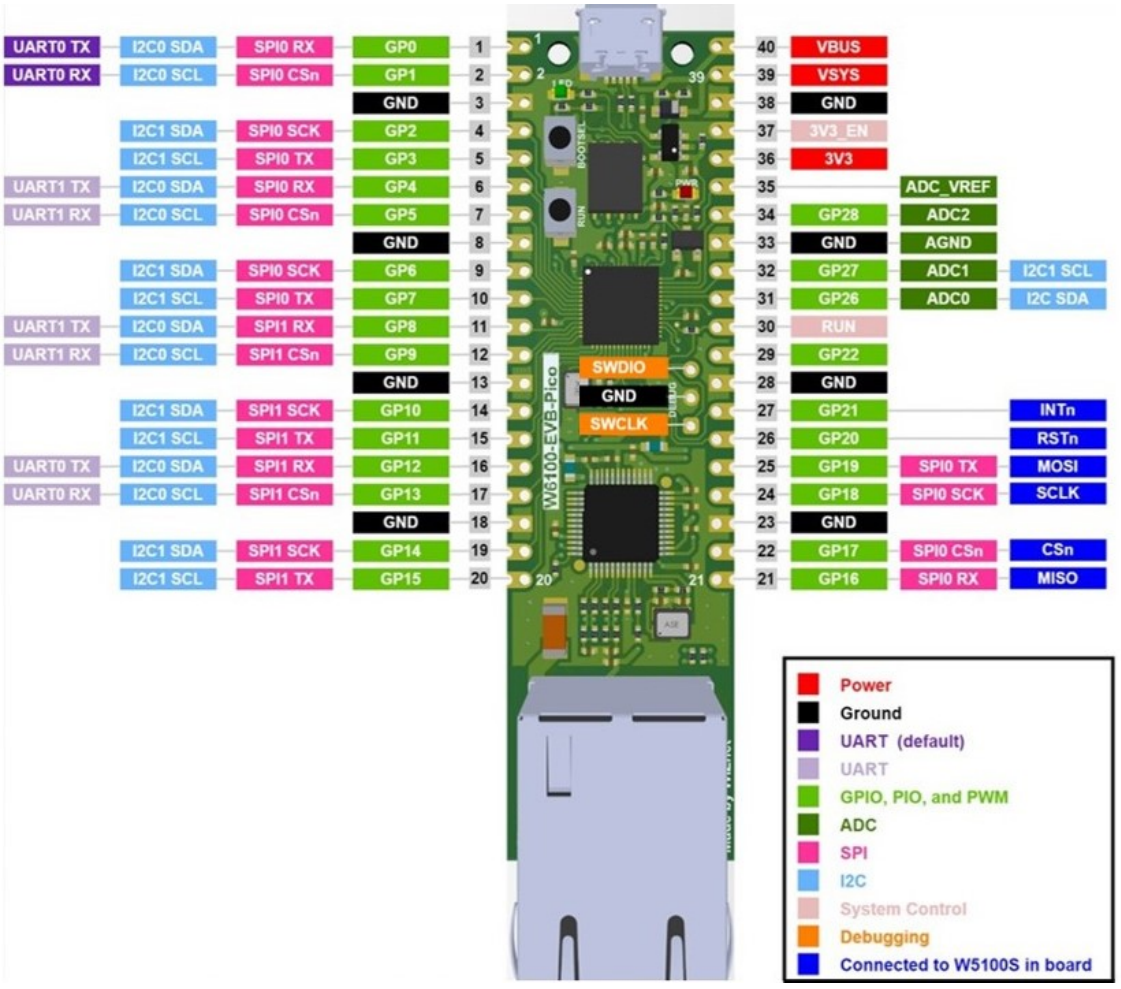

W6100-EVB-Pico pinout is directly connected to the GPIO of RP2040 as shown in the picture above. It has the same pinout as the Raspberry Pi Pico board. However, GPIO16, GPIO17, GPIO18, GPIO19, GPIO20, GPIO21 are connected to W6100 inside the board. These pins enable SPI communication with W5100S to use Ethernet function. If you are using the Ethernet function, these pins cannot be used for any other purpose.

The RP2040 GPIO used inside W6100-EVB-Pico is as follows.

I/O	Pin Name	Description
I	GPIO16	Connected to MISO on W6100
O	GPIO17	Connected to CSn on W6100
O	GPIO18	Connected to SCLK on W6100
O	GPIO19	Connected to MOSI on W6100
O	GPIO20	Connected to RSTn on W6100
I	GPIO21	Connected to INTn on W6100
I	GPIO24	VBUS sense - high if VBUS is present, else low
O	GPIO25	Connected to user LED
I	GPIO29	Used in ADC mode (ADC3) to measure VSYS/3

Apart from GPIO and ground pins, there are 7 other pins on the main 40-pin interface:

Pin No.	Pin Name	Description
PIN40	VBUS	Micro-USB input voltage, connected to micro-USB port pin 1. Nominally 5V.
PIN39	VSYS	Main system input voltage, which can vary in the allowed range 4.3V to 5.5V, and is used by the on-board LDO to generate the 3.3V .
PIN37	3V3_EN	Connects to the on-board LDO enable pin. To disable the 3.3V (which also de-powers the RP2040 and W6100), short this pin low.
PIN36	3V3	Main 3.3V supply to RP2040 and W6100, generated by the on-board LDO.
PIN35	ADC_VREF	ADC power supply (and reference) voltage, and is generated on W6100-EVB-Pico by filtering the 3.3V supply.
PIN33	AGND	Ground reference for GPIO26-29.
PIN30	RUN	RP2040 enable pin, To reset RP2040, short this pin low.

Operation Condition

Item	Description
Operation Temperature MAX	85C (including self-heating)
Operation Temperature MIN	-20C
VBUS	DC 5V (+/- 10%)
VSYS Min	DC 4.3V
VSYS Max	DC 5.5V

Recommended maximum ambient temperature of operation is 70C.

Technical Reference

RP2040 Datasheet

- Download

W6100 Datasheet

- Download

Schematic v1.0

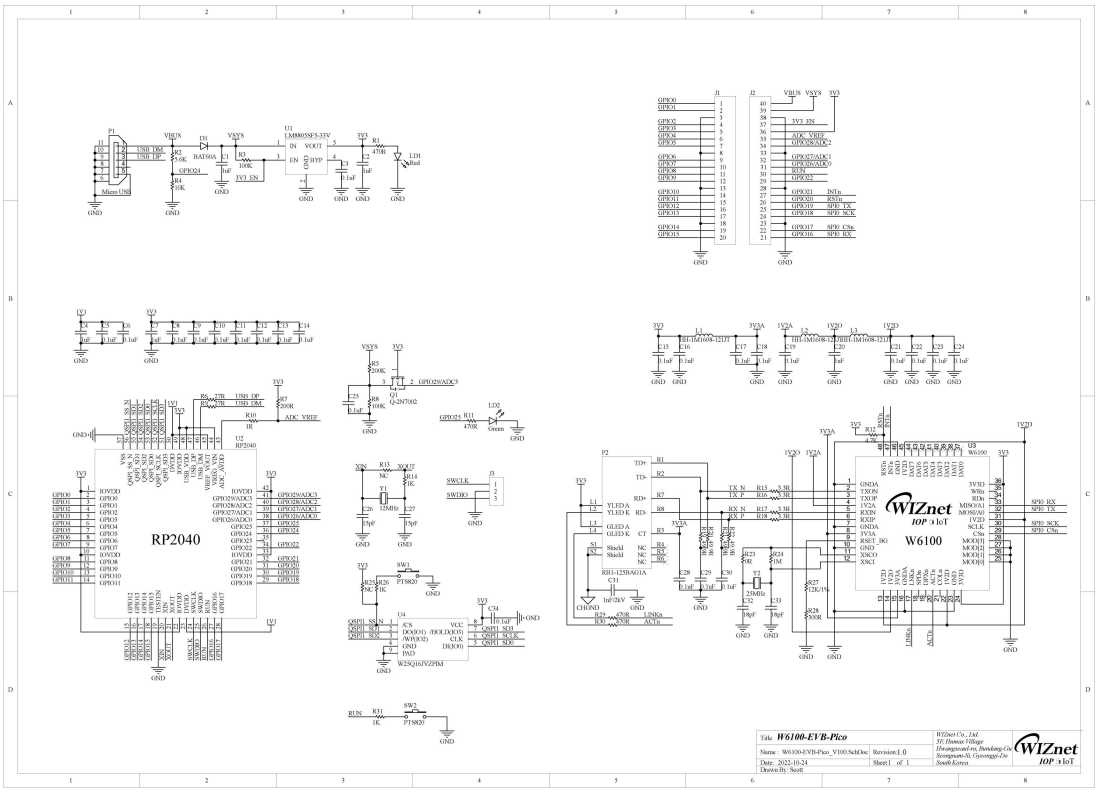

Schematic & Part list & Gerber File

- Go to Github

Dimension v1.0 (Unit : mm)

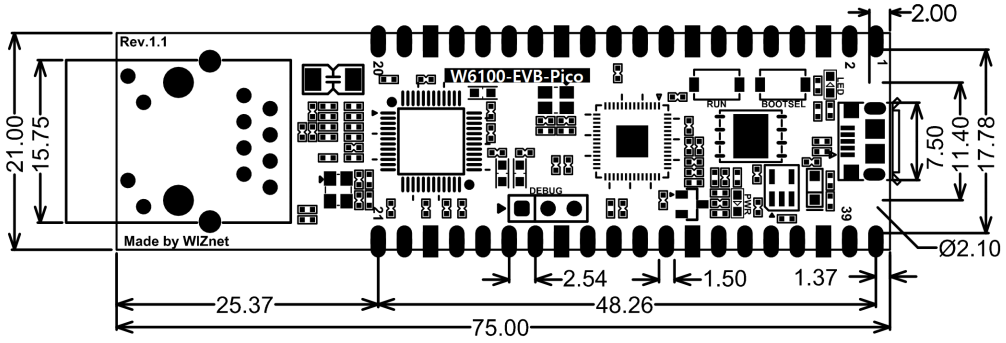

Edit this page