OptoSupply
Light It Up

5mm Round Sunshine LED

OSCK4L5111A

■Features

- High Luminous LEDs
- 5mm Round Standard Directivity
- Long Lifetime Operation
- Superior Weather-resistance
- Water Clear Type

■Applications

- Backlighting (switches, keys, displays, illuminated advertising etc.)
- Substitution of Micro Incandescent Lamps
- Reading Lamps / Emergency Lighting
- Marker lights (e.g. steps, exit ways, etc.)
- Other Lighting

■Outline Dimension

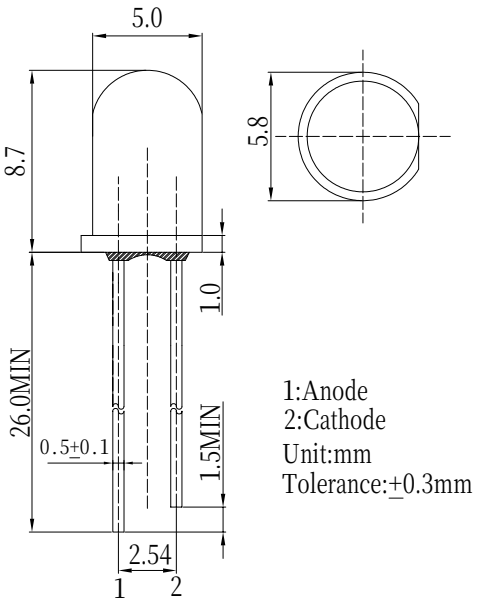

■Absolute Maximum Rating (Ta=25°C)

Item	Symbol	Value	Unit
DC Forward Current	I_F	30	mA
Pulse Forward Current*	I_{FP}	100	mA
Reverse Voltage	V_R	5	V
Power Dissipation	P_D	108	mW
Operating Temperature	Topr	-30 ~ +85	℃
Storage Temperature	Tstg	-40~ +100	℃
Lead Soldering Temperature	Tsol	260℃/5sec	-

*Pulse width Max.10ms Duty ratio max 1/10

■Directivity

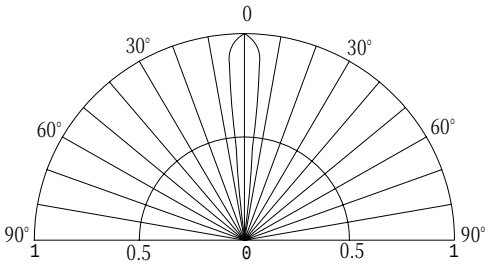

■Electrical -Optical Characteristics (Ta=25°C)

Item	Symbol	Condition	Min.	Typ.	Max.	Unit
DC Forward Voltage	V_F	I_F=20mA	2.8	3.1	3.6	V
DC Reverse Current	I_R	V_R=5V	-	-	10	μA
Luminous Flux	Φv	I_F=20mA	7.0	7.5	-	lm
Chromaticity Coordinates*	x	I_F=20mA	-	0.34	-	
	y	I_F=20mA	-	0.37	-	
50% Power Angle	$2\theta_{1/2}$	I_F=20mA	-	15	-	deg

*1 Luminous Flux Measurement allowance is ±15%
*2 Chromaticity Coordinates Measurement allowance is ±10%

LED & Application Technologies

sales@prom-elec.com / ООО ПРОМЭЛЕКТРОНИКА